Form No. 3479-353 Rev A

TransPro™ 80 Tow-Behind Trailer

Model No. 04235

Model No. 04236

Model No. 04237

Installation Instructions

Safety

- The TransPro trailer is intended for use with walk-behind Greensmaster® machines only. Towing incompatible products can result in damage to the trailer and/or injury to the operator.
- Use only a vehicle with the proper tow rating. The TransPro 80 trailer and a greens mower weighs approximately 525 lb (238 kg). Ensure that the tow vehicle has adequate braking and handling capacity by checking the recommendations of the vehicle manufacturer.
- Ensure that the trailer is properly connected to the tow vehicle before loading or unloading the greens mowers to prevent sudden unintended tongue movement or flip-up. The trailer tongue should be parallel to the ground when you align it with the tow vehicle hitch.
- The trailer adds extra towing weight to the vehicle. Drive the vehicle safely.
  - Do not drive the machine on highways or public roads.
  - Always slow the tow vehicle when approaching and while making a turn.
  - Always slow the tow vehicle when driving in unfamiliar areas or over rough terrain.
  - Always slow the tow vehicle when changing the direction of travel or preparing to stop.
  - Always slow the tow vehicle when turning or driving on slopes.
  - Do not make sudden or sharp turns. Do not suddenly change direction of travel on an incline, ramp, grade, slope, or similar surface.
  - The maximum towing speed is 15 mph (24 km/h). Always adjust the tow-vehicle speed to allow for existing ground conditions, such as wet slick surfaces, loose sand or gravel and/or low visibility conditions, such as dim or bright lighting, fog, mist, or rain.
  - Be especially careful when driving a heavily loaded vehicle down an incline or slope. Drive the vehicle up and down the face of the slopes, inclines, or grades whenever possible. Do not drive across the face of a slope if at all possible. There is a risk of upsetting the vehicle, which can result in serious injury or death.
- Before backing up, look behind you and ensure that it is clear of people and objects. Back up slowly and watch the trailer movement closely.
- Use extreme caution and slow speed when backing up the trailer and tow vehicle.
- Watch out for traffic when near or crossing roads. Always yield the right of way to pedestrians and other vehicles.
- If the trailer begins to vibrate abnormally, stop the tow vehicle immediately. Shut off the tow-vehicle engine. Repair all damage before towing.
- Before servicing or making any adjustments to the trailer, do the following:
  - Stop the tow vehicle and engage the parking brake.
  - Shut off the tow-vehicle engine and remove the key.
- While the trailer is disconnected from the tow vehicle:
  - Store the trailer on level ground.
  - Chock the wheels to prevent the trailer from moving.
- Keep all fasteners tightened securely. Replace any parts removed when servicing or making adjustments.

© 2026— The Toro® Company
8111 Lyndale Avenue South
Bloomington, MN 55420

Register at www.Toro.com.

Original Instructions (EN)
Printed in the USA
All Rights Reserved

3479-353

Safety and Instructional Decals

Safety decals and instructions are easily visible to the operator and are located near any area of potential danger. Replace any decal that is damaged or missing.



decal106-4669

106-4669

1. Warning—do not carry passengers; do not tow down slopes greater than 15°; do not exceed 24 km/h (15 mph); drive in a straight line when moving fast; adjust your speed according to ground conditions.



decal133-8061

133-8061

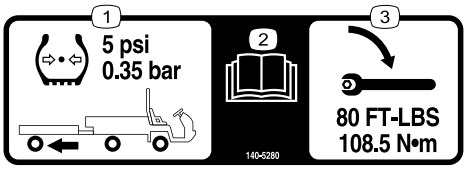

decal140-5280

140-5280

1. The trailer tires should be inflated to 0.35 bar (5 psi).
2. Read the *Operator's Manual*.
3. Torque the trailer wheel nuts to 108.5 N·m (80 ft-lb).



decal140-5281

140-5281

1. Warning—do not carry passengers on the trailer.

Installation

Assembling the Trailer

Installing the Tongue Assembly to the Frame

Use a clevis pin, 2 washers (5/8 inch), and 2 cotter pins to secure the tongue assembly to the frame assembly (Figure 1).

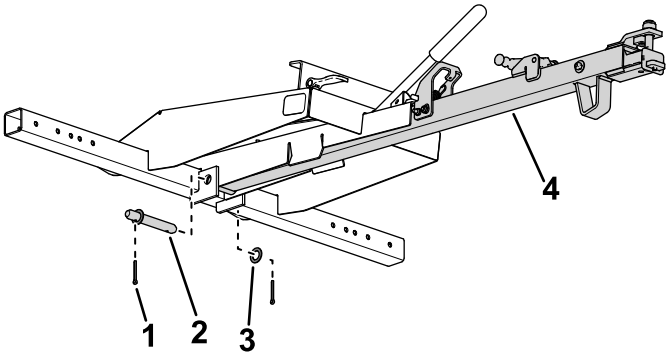

g577157

Figure 1

1. Cotter pin
2. Clevis pin
3. Washer
4. Tongue assembly

Installing the Wheel Hubs and the Rail Ramp Kit or the Flat Ramp Kit

1. Refer to Figure 2 to determine the frame mounting holes that you should use to fit the width of your greensmower.

   Important: **If your Greensmaster machine has a groomer attached, it will be mounted differently than above; refer to the following list:**

   - Greensmaster 1000/2000 or 2100 with groomer: The left side should be set to position #3 and the right side should be set to #1.
   - Greensmaster 1800/eFlex 1800 with groomer: The left side should be set to position #2 and the right side should be set to #3.

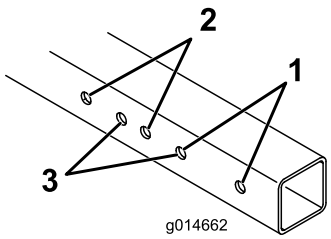

g014662

Figure 2

1. Greensmaster 1026, e1026, 1600, 2600, 1000 with groomer, and 2000 machines with groomer
2. Greensmaster 1018, Flex 1018, 800, Flex 18, Flex 1800, 1820, and eFlex 1800 and 1820 machines
3. Greensmaster 1021, e1021, Flex 1021, eFlex 1021, 1000, Flex 21, 2000, Flex 2100, 2120, and eFlex 2100 and 2120 machines

2. Use 4 bolts (3/8 x 3-1/2 inches), 4 nuts (3/8 inch), and 8 washers (3/8 inch) to secure the wheel hubs and the Rail Ramp Kit or Flat Ramp Kit to the frame (Figure 3).

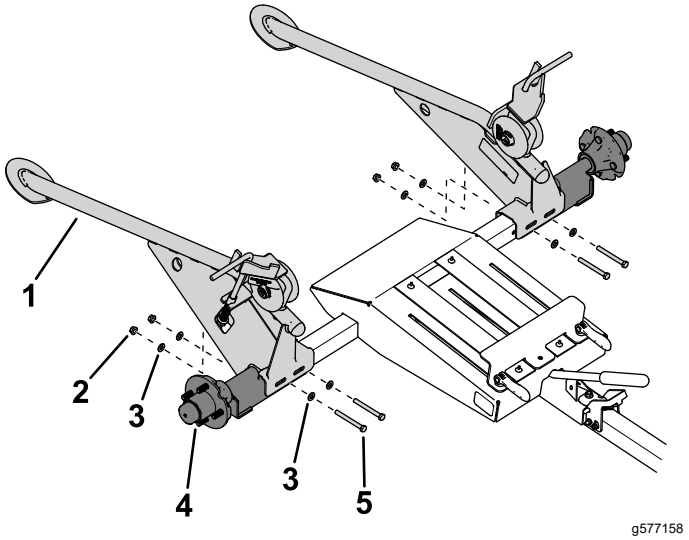

Figure 3

Rail Ramp Kit shown

1. Rail Ramp Kit
2. Nut (3/8 inch)
3. Washer (3/8 inch)
4. Wheel hub
5. Bolt (3/8 x 3-1/2 inches)

Installing the Wheels

1. Mount a wheel assembly to each axle hub with 4 lug nuts (Figure 4).

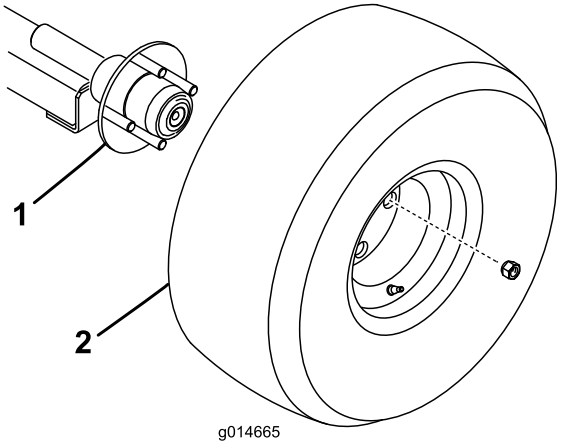

g014665

Figure 4

1. Wheel-hub axle
2. Wheel

2. Torque the lug nuts as specified in Checking the Torque of the Wheel Lug Nuts (page 7).
3. Deflate the tires to the specification listed in Checking the Tire Air Pressure (page 7).

Operation

Securing the Trailer to the Tow Vehicle

1. Lift up the tongue handle (Figure 5).

   Note: Lifting the handle retracts the slide assembly.

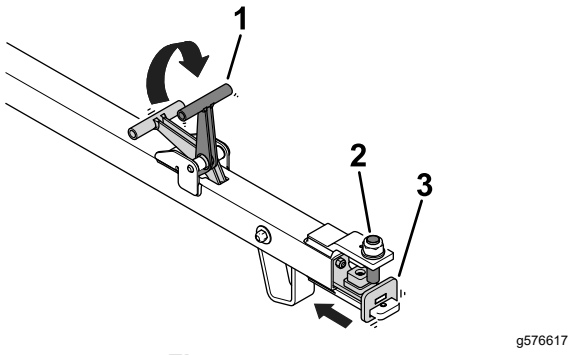

Figure 5

1. Tongue handle
2. Tongue pin
3. Slide assembly

2. Align the tongue pin with the tow-vehicle hitch (Figure 6).

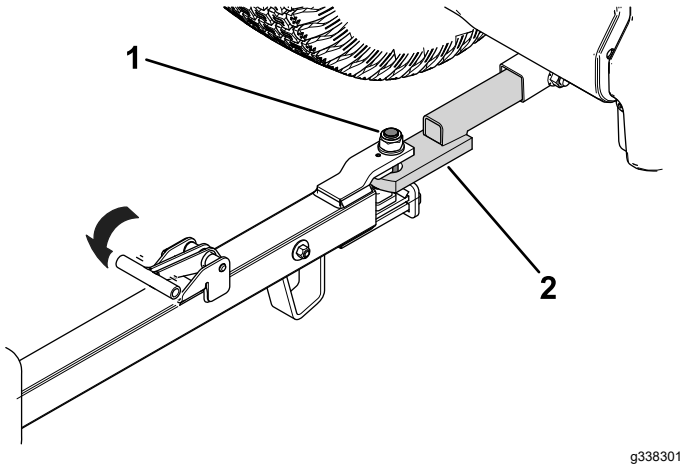

Figure 6

1. Tongue pin
2. Tow-vehicle hitch

3. Release the tongue handle (Figure 6) to secure the trailer to the tow-vehicle hitch.

   Ensure that the slide assembly is centered below the tongue pin.

Loading the Trailer

Preparing the Load the Trailer

1. Chock the trailer wheels.
2. While maintaining control of the trailer bed and holding onto the handle, press down on the latch assembly and the lift handle (Figure 7). Lower the trailer bed to the ground.

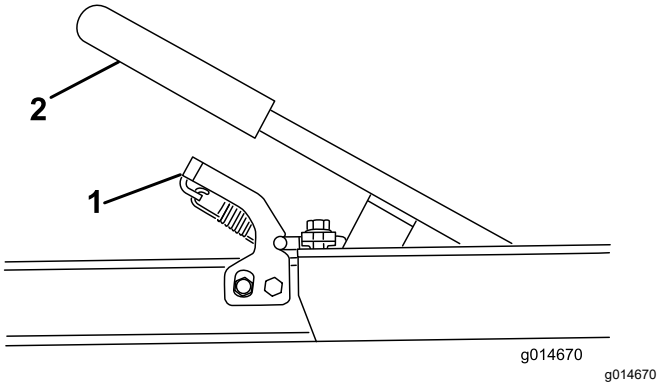

Figure 7

1. Latch assembly
2. Handle

3. Remove the grass baskets from the greens mower.

   Note: You can store the grass baskets in the tow vehicle.

4. Refer to the appropriate instruction for an equipped ramp or rail kit as follows:

   - **Rail Kit:** Install the rail wheels onto the hex shafts (Figure 8).

     Note: The rail-wheel clip slots are facing outwards for all walk-behind Greensmaster machines.

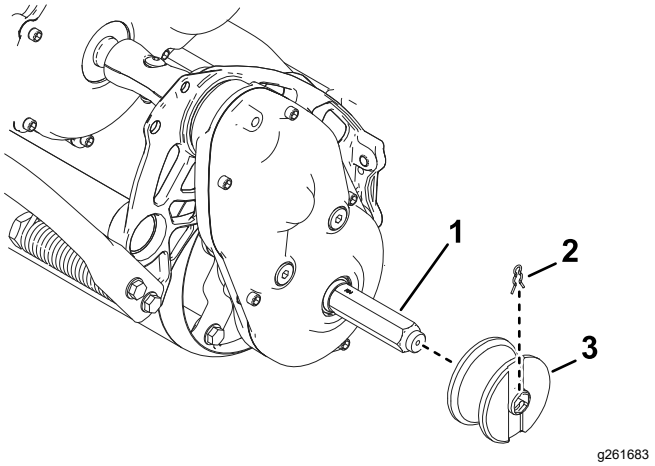

Figure 8

1. Hex shaft
2. Clip
3. Rail wheel

- **Wheel Kit:** Install the transport wheels onto the hex shafts; refer to the transport-wheel installation section in your traction unit *Operator's Manual*.

Loading a Machine on the Trailer

1. Open the retention rods on both sides of the trailer (Figure 9).

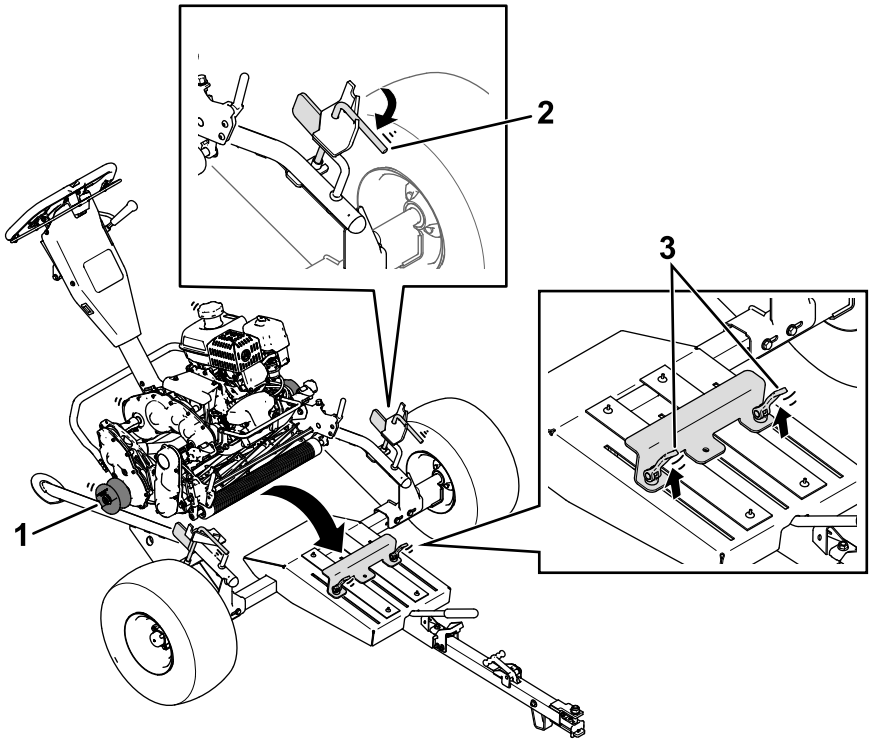

Figure 9
Rail Ramp Kit shown

1. Rail wheel
2. Retention rod—open
3. Roller-mount latches—open

2. Use the flat ramps or rails to slowly drive the machine onto the trailer until the front roller is seated within the roller mount and the rail or transport wheels are seated within the wheel guides.

   Important: **When you load a machine onto the trailer for the first time, open the roller-mount latches to allow the roller mount to move. Close the latches to secure the roller mount in place.**

   If you load a machine with different configurations (e.g., a machine with an equipped groomer-drive kit), perform this step to ensure that the machine is properly secured on the trailer.

3. Shut off the machine and engage the parking brake.
4. Close the retention rods on both sides of the trailer (Figure 10).

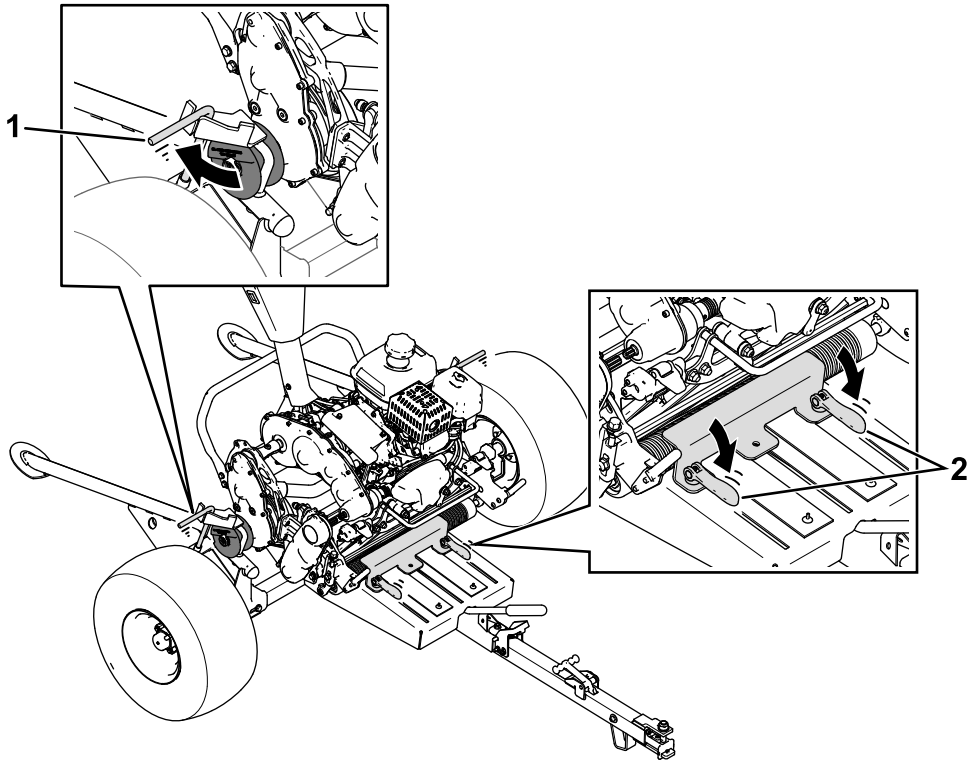

g578439

Figure 10

Rail Ramp Kit shown

1. Retention rod—closed
2. Roller-mount latches—closed

Maintenance

Recommended Maintenance Schedule(s)

Maintenance Service Interval	Maintenance Procedure
After the first 10 hours	• Check the torque of the wheel lug nuts.
Before each use or daily	• Check the tire air pressure.
Yearly	• Check the wheel bearings for endplay.

Checking the Tire Air Pressure

Service Interval: Before each use or daily

Tire air pressure specification: 34 kPa (5 psi)

Check the air pressure in the tires (Figure 11). Add or remove air as needed to set the air pressure in the tires to the tire air-pressure specification.

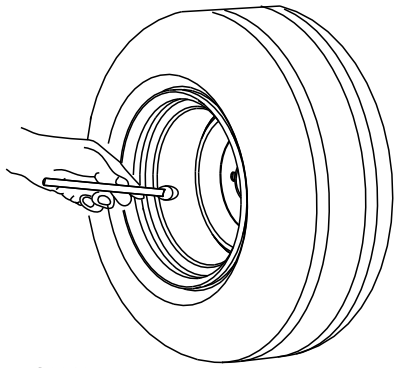

g001055

Figure 11

Checking the Wheel Bearings for Freeplay

Service Interval: Yearly

1. Remove any machines that may be stored on the trailer.
2. Use a jack to raise the trailer and place jack stands under the trailer.
3. Check each wheel for excessive freeplay (i.e., free movement of the tire and hub assembly).

   If you detect excessive freeplay, contact to your authorized Toro distributor.

Checking the Torque of the Wheel Lug Nuts

Service Interval: After the first 10 hours

Torque specification: 108 N·m (80 ft-lb)

Check the torque of the wheel lug nuts each time you install the wheels and after the first 10 hours of operation.

Torque the wheel lug nuts in the pattern as shown in Figure 12 to the specified torque.

⚠ WARNING

Failure to maintain proper torque could result in failure or loss of wheel and could result in personal injury.

Torque the wheel lug nuts to the specified torque.

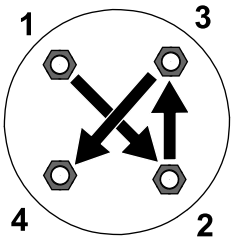

g274650

Figure 12

Notes:

Notes:

Notes:

The Toro Warranty

Two-Year or 1,500 Hours Limited Warranty

Conditions and Products Covered

The Toro Company warrants your Toro Commercial product (“Product”) to be free from defects in materials or workmanship for 2 years or 1,500 operational hours*, whichever occurs first. This warranty is applicable to all products with the exception of Aerators (refer to separate warranty statements for these products). Where a warrantable condition exists, we will repair the Product at no cost to you including diagnostics, labor, parts, and transportation. This warranty begins on the date the Product is delivered to the original retail purchaser.
* Product equipped with an hour meter.

Instructions for Obtaining Warranty Service

You are responsible for notifying the Commercial Products Distributor or Authorized Commercial Products Dealer from whom you purchased the Product as soon as you believe a warrantable condition exists. If you need help locating a Commercial Products Distributor or Authorized Dealer, or if you have questions regarding your warranty rights or responsibilities, you may contact us at:

Toro Commercial Products Service Department
8111 Lyndale Avenue South
Bloomington, MN 55420-1196

952–888–8801 or 800–952–2740
E-mail: commercial.warranty@toro.com

Owner Responsibilities

As the product owner, you are responsible for required maintenance and adjustments stated in your *Operator's Manual*. Repairs for product issues caused by failure to perform required maintenance and adjustments are not covered under this warranty.

Items and Conditions Not Covered

Not all product failures or malfunctions that occur during the warranty period are defects in materials or workmanship. This warranty does not cover the following:

- Product failures which result from the use of non-Toro replacement parts, or from installation and use of add-on, or modified non-Toro branded accessories and products.
- Product failures which result from failure to perform recommended maintenance and/or adjustments.
- Product failures which result from operating the Product in an abusive, negligent, or reckless manner.
- Parts consumed through use that are not defective. Examples of parts which are consumed, or used up, during normal Product operation include, but are not limited to, brake pads and linings, clutch linings, blades, reels, rollers and bearings (sealed or greasable), bed knives, spark plugs, castor wheels and bearings, tires, filters, belts, and certain sprayer components such as diaphragms, nozzles, flow meters, and check valves.
- Failures caused by outside influence, including, but not limited to, weather, storage practices, contamination, use of unapproved fuels, coolants, lubricants, additives, fertilizers, water, or chemicals.
- Failure or performance issues due to the use of fuels (e.g. gasoline, diesel, or biodiesel) that do not conform to their respective industry standards.
- Normal noise, vibration, wear and tear, and deterioration. Normal “wear and tear” includes, but is not limited to, damage to seats due to wear or abrasion, worn painted surfaces, scratched decals or windows.

Parts

Parts scheduled for replacement as required maintenance are warranted for the period of time up to the scheduled replacement time for that part. Parts replaced under this warranty are covered for the duration of the original product warranty and become the property of Toro. Toro will make the final decision whether to repair any existing part or assembly or replace it. Toro may use remanufactured parts for warranty repairs.

Deep Cycle and Lithium-Ion Battery Warranty

Deep cycle and Lithium-Ion batteries have a specified total number of kilowatt-hours they can deliver during their lifetime. Operating, recharging, and maintenance techniques can extend or reduce total battery life. As the batteries in this product are consumed, the amount of useful work between charging intervals will slowly decrease until the battery is completely worn out. Replacement of worn out batteries, due to normal consumption, is the responsibility of the product owner.
Note: (Lithium-Ion battery only): Refer to the battery warranty for additional information.

Lifetime Crankshaft Warranty (ProStripe 02657 Model Only)

The Prostripe which is fitted with a genuine Toro Friction Disc and Crank-Safe Blade Brake Clutch (integrated Blade Brake Clutch (BBC) + Friction Disc assembly) as original equipment and used by the original purchaser in accordance with recommended operating and maintenance procedures, are covered by a Lifetime Warranty against engine crankshaft bending. Machines fitted with friction washers, Blade Brake Clutch (BBC) units and other such devices are not covered by the Lifetime Crankshaft Warranty.

Maintenance is at Owner’s Expense

Engine tune-up, lubrication, cleaning and polishing, replacement of filters, coolant, and completing recommended maintenance are some of the normal services Toro products require that are at the owner’s expense.

General Conditions

Repair by an Authorized Toro Distributor or Dealer is your sole remedy under this warranty.

The Toro Company is not liable for indirect, incidental or consequential damages in connection with the use of the Toro Products covered by this warranty, including any cost or expense of providing substitute equipment or service during reasonable periods of malfunction or non-use pending completion of repairs under this warranty. Except for the Emissions warranty referenced below, if applicable, there is no other express warranty. All implied warranties of merchantability and fitness for use are limited to the duration of this express warranty.

Some states do not allow exclusions of incidental or consequential damages, or limitations on how long an implied warranty lasts, so the above exclusions and limitations may not apply to you. This warranty gives you specific legal rights, and you may also have other rights which vary from state to state.

Note Regarding Emissions Warranty

The Emissions Control System on your Product may be covered by a separate warranty meeting requirements established by the U.S. Environmental Protection Agency (EPA) and/or the California Air Resources Board (CARB). The hour limitations set forth above do not apply to the Emissions Control System Warranty. Refer to the Engine Emission Control Warranty Statement supplied with your product or contained in the engine manufacturer’s documentation.

Countries Other than the United States or Canada

Customers who have purchased Toro products exported from the United States or Canada should contact their Toro Distributor (Dealer) to obtain guarantee policies for your country, province, or state. If for any reason you are dissatisfied with your Distributor's service or have difficulty obtaining guarantee information, contact your Authorized Toro Service Center.

California Proposition 65 Warning Information

What is this warning?

You may see a product for sale that has a warning label like the following:



WARNING: Cancer and Reproductive Harm—www.p65Warnings.ca.gov.

What is Prop 65?

Prop 65 applies to any company operating in California, selling products in California, or manufacturing products that may be sold in or brought into California. It mandates that the Governor of California maintain and publish a list of chemicals known to cause cancer, birth defects, and/or other reproductive harm. The list, which is updated annually, includes hundreds of chemicals found in many everyday items. The purpose of Prop 65 is to inform the public about exposure to these chemicals.

Prop 65 does not ban the sale of products containing these chemicals but instead requires warnings on any product, product packaging, or literature with the product. Moreover, a Prop 65 warning does not mean that a product is in violation of any product safety standards or requirements. In fact, the California government has clarified that a Prop 65 warning "is not the same as a regulatory decision that a product is 'safe' or 'unsafe.'" Many of these chemicals have been used in everyday products for years without documented harm. For more information, go to https://oag.ca.gov/prop65/faqs-view-all.

A Prop 65 warning means that a company has either (1) evaluated the exposure and has concluded that it exceeds the "no significant risk level"; or (2) has chosen to provide a warning based on its understanding about the presence of a listed chemical without attempting to evaluate the exposure.

Does this law apply everywhere?

Prop 65 warnings are required under California law only. These warnings are seen throughout California in a wide range of settings, including but not limited to restaurants, grocery stores, hotels, schools, and hospitals, and on a wide variety of products. Additionally, some online and mail order retailers provide Prop 65 warnings on their websites or in catalogs.

How do the California warnings compare to federal limits?

Prop 65 standards are often more stringent than federal and international standards. There are various substances that require a Prop 65 warning at levels that are far lower than federal action limits. For example, the Prop 65 standard for warnings for lead is 0.5 µg/day, which is well below the federal and international standards.

Why don't all similar products carry the warning?

- Products sold in California require Prop 65 labelling while similar products sold elsewhere do not.
- A company involved in a Prop 65 lawsuit reaching a settlement may be required to use Prop 65 warnings for its products, but other companies making similar products may have no such requirement.
- The enforcement of Prop 65 is inconsistent.
- Companies may elect not to provide warnings because they conclude that they are not required to do so under Prop 65; a lack of warnings for a product does not mean that the product is free of listed chemicals at similar levels.

Why does Toro include this warning?

Toro has chosen to provide consumers with as much information as possible so that they can make informed decisions about the products they buy and use. Toro provides warnings in certain cases based on its knowledge of the presence of one or more listed chemicals without evaluating the level of exposure, as not all the listed chemicals provide exposure limit requirements. While the exposure from Toro products may be negligible or well within the "no significant risk" range, out of an abundance of caution, Toro has elected to provide the Prop 65 warnings. Moreover, if Toro does not provide these warnings, it could be sued by the State of California or by private parties seeking to enforce Prop 65 and subject to substantial penalties.