EN

Walking Pad Treadmill User's Manual Instruction

Model No.: H40EA
Model No. is helpful when you make an order inquiry.
(PLEASE SAVE THESE INSTRUCTIONS)

Activate Warranty

Please contact us at the following email address to register your product and activate the warranty.

Customer Service

EU Email:
servicestar2024@outlook.com
North America Email:
wenokerdirect@outlook.com
Monday-Friday
From 8:00 a.m. to 6:30 p.m.
(Except Holidays)

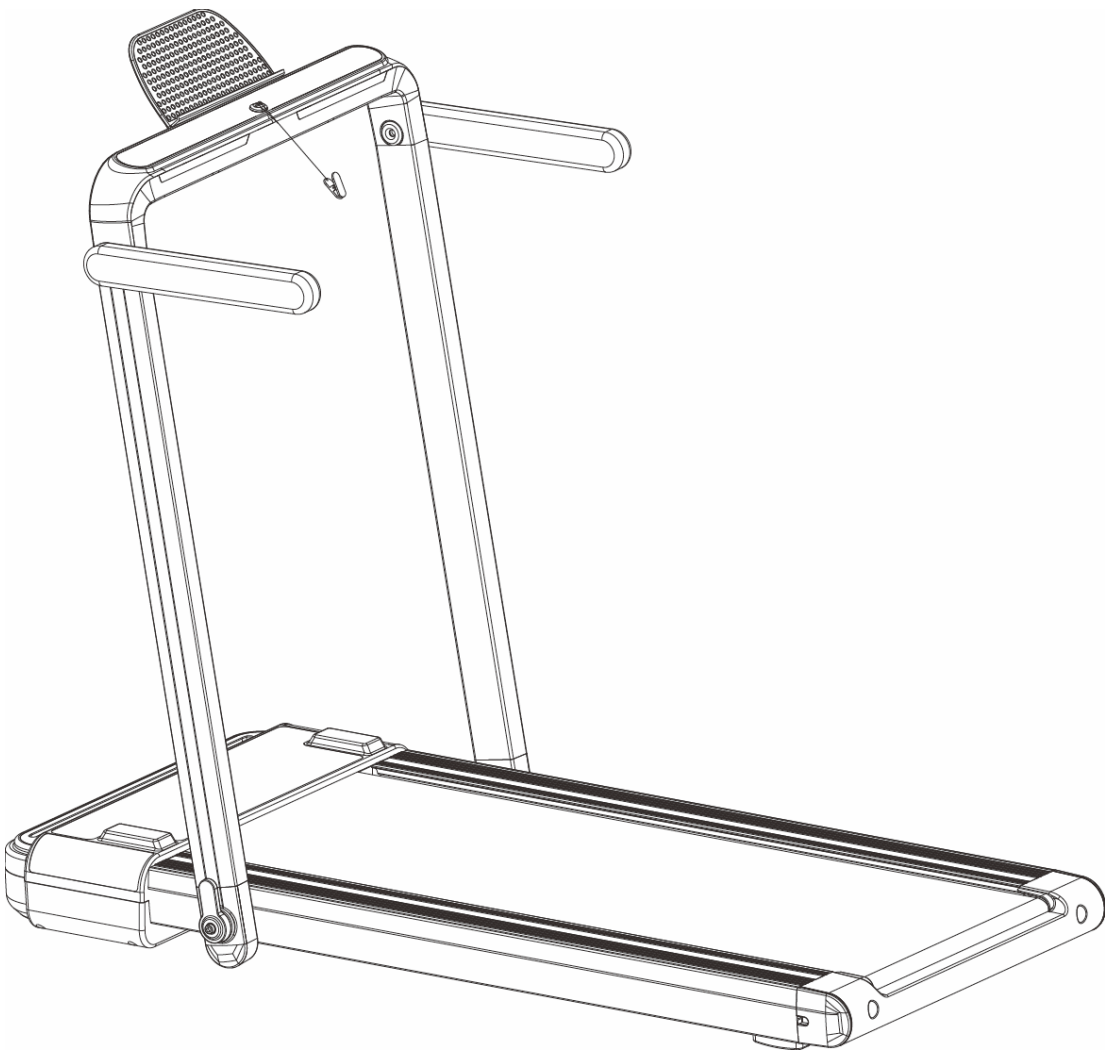

⚠ WARNING

Before beginning any exercise program, consult your physician.
This is especially important for individuals over the age of 35 or persons with pre-existing health problems. Read all instructions before using any fitness equipment.

MAKE YOUR FITNESS GOALS

CONTENTS

01. Product Brief Introduction----------01

02. How To Install App----------02

03. Safety Cautions And Warnings----------03

04. Parameter And Packing List----------05

05. Assembly Guidance---------- 06

06. Remote Control Instructions----------11

07. Exercise Advises And Plan---------- 12

08. Product Instruction---------- 13

09. Maintenance----------16

10. Common Malfunctions And Solutions----------18

01.PRODUCT BRIEF INTRODUCTION

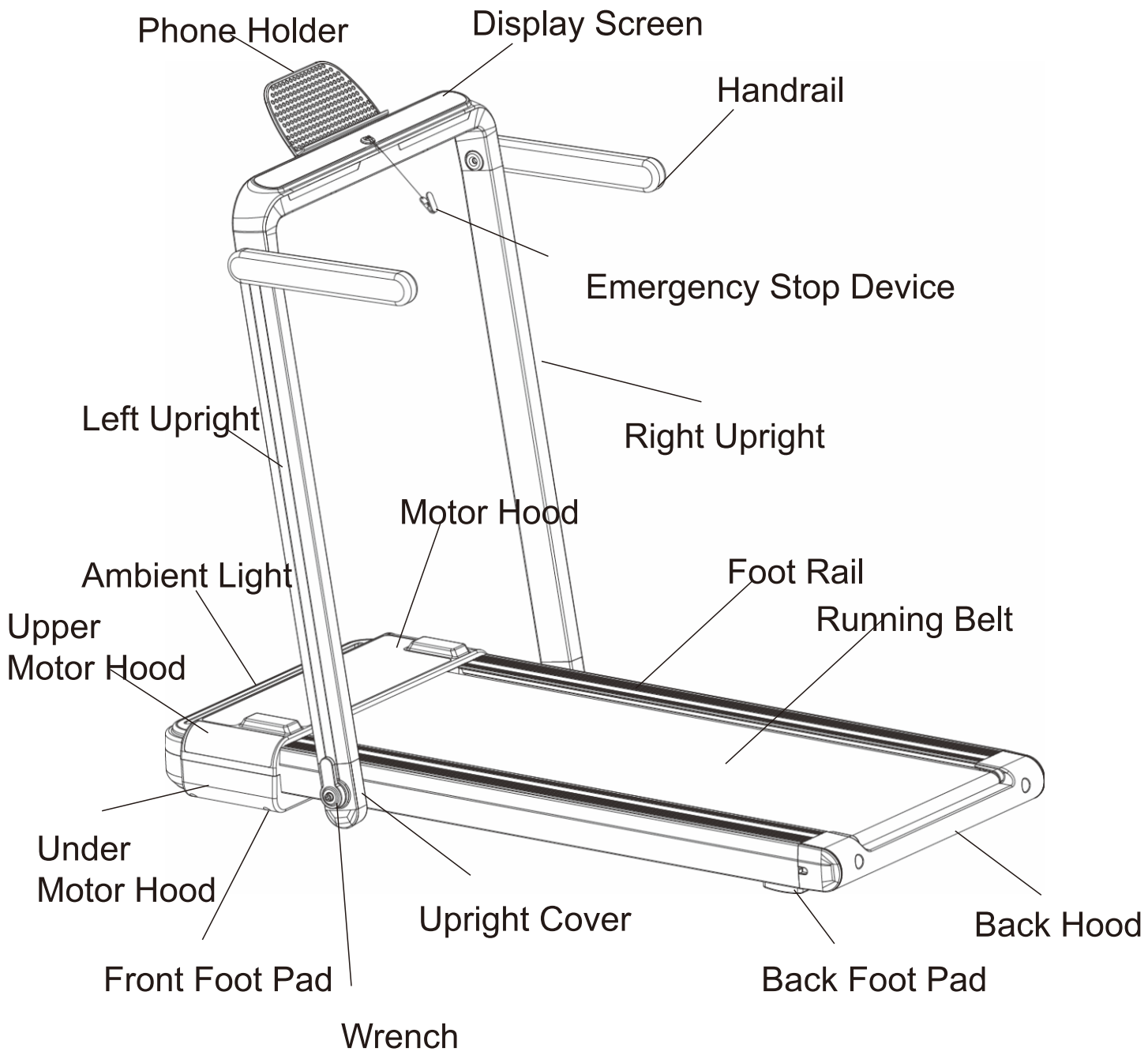

02 HOW TO INSTALL APP

Scan the QR code on the right

↓

Http://ifitshow.com/qr

↓

Jump to the App Store to download and install Open the App, allow permission based on the system prompt

↓

Login to the App, please use the mobile number or email to register for the new user

↓

Start Using FITSHOW

Attentions:

Please fill in the correct email or mobile phone number to make sure you can retrieve your password and username via them.

03.SAFETY CAUTIONS AND WARNINGS

Caution! Read all precautions and instructions in this manual before using this equipment:

1. This treadmill should be used indoor,do not let this product be soaked and keep it away from water, do not put other things on the treadmill.
2. Wear appropriate exercise clothes while using the treadmill. Do not wear loose clothes that could
become caught in the treadmill. Athletic support clothes are recommended for both men and women.
3. Always wear athletic shoes. Never use the treadmill with bare feet, wearing only stockings, or in sandals.
4. Power plug has to be connected to a grounded receptacle. To avoid overloading the circuit, do not plug other electrical devices, except for lowpower devices such as cell phone chargers, into the surge suppressor or into an outlet on the same circuit.
5. Keep children and pets away from the treadmill at all times.
6. Avoid long-time overload operation,otherwise it will cause damage to the motor and controller and accelerate the aging of bearings, running belts and pedals. Do routine maintenance and regular maintenance work.
7. Reduce dust and keep certain humidity indoor to prevent electronic and control devices from interference by static electricity.
8. Always unplug the power cord immediately after use, before cleaning the treadmill, and before performing the maintenance and adjustment procedures described in this manual.
9. Place the treadmill on a level surface, with at least 2.4 m of clearance behind it and 0.6 m on each side. Do not place the treadmill on any surface that blocks air openings. To protect the floor or carpet from damage, place a mat under the treadmill.
10. Read, understand, and test the emergency stop procedure before using the treadmill.
Always wear the safety clip while using the treadmill.
11. Before beginning any exercise program, consult your physician. This is especially important for persons with pre-existing health problems.
12. Stop immediately if you feel uncomfortable.
13. The treadmill is intended for home use only. Do not use the treadmill in any commercial, rental , or institutional setting.
14. The treadmill should be used only by persons weighing 120kg or less.
15. Never allow more than one person on the treadmill at a time.
16. Keep the power cord and the surge suppressor away from heated surfaces.
17. Never move the walking belt while the power is turned off. Do not operate the treadmill if the power cord or plug is damaged, or if the treadmill is not working properly.Read, understand, and test the emergency stop procedure before using the treadmill.

18. Keep fingers, hair, and clothing away from the moving walking belt.
19. The treadmill is capable of high speeds. Adjust the speed in small increments to avoid sudden jumps in speed.
20. Never leave the treadmill unattended while it is running. Always remove the safety key, press the
power switch into the off position, and unplug the power cord when the treadmill is not in use.
21. Do not attempt to move the treadmill until it is properly assembled.
22. Never insert any object into any opening on the treadmill.
23. Inspect and properly tighten all parts each time the treadmill is used.
24. It is the responsibility of the owner to ensure that all users of this treadmill are adequately informed of all warnings and precautions.
25. Never remove the motor hood unless instructed to do so by an authorized service representative. Servicing other than the procedures in this manual should be performed by an authorized service representative only.
26.Over exercising may result in serious injury or death. If you feel faint, if you become short of breath, or if you experience pain while exercising, stop immediately and cool down.

04

04. PARAMETER AND PACKING LIST

Parameter		
No.	Parameter	Description
1	Voltage	220V/50Hz
2	Motor Power	0.75HP
3	Operating Methods	Motor cover touching operation, Display touching operation, Phone APP, Remote control.
4	Display	LED display, APP
5	Expanded Dimension	1265*645*1150mm (L*W*H)
6	Speed Range	Expaned 1-14km/h, Folded 1-6 km/h
7	Running Belt Zone	400*1000mm (W*L)
8	N/G weight	Net weight: 28kg Gross weight: 33kg
9	Package Size	1410*760*150mm (L*W*H)

Packing List					
NO.	Name	Quantity	NO.	Name	Quantity
1	Main Machine	1pcs	2	Accessory Package	1pcs

Packing List		
NO.	Name	Quantity
1	Silicone oil	1
2	Manual	1
3	Emergency stop device	1
4	Allen wrench (6#)	1
5	Remote control	1
6	Phone holder	1
7	Power cord	1

05. ASSEMBLY GUIDANCE

How to expand the treadmill

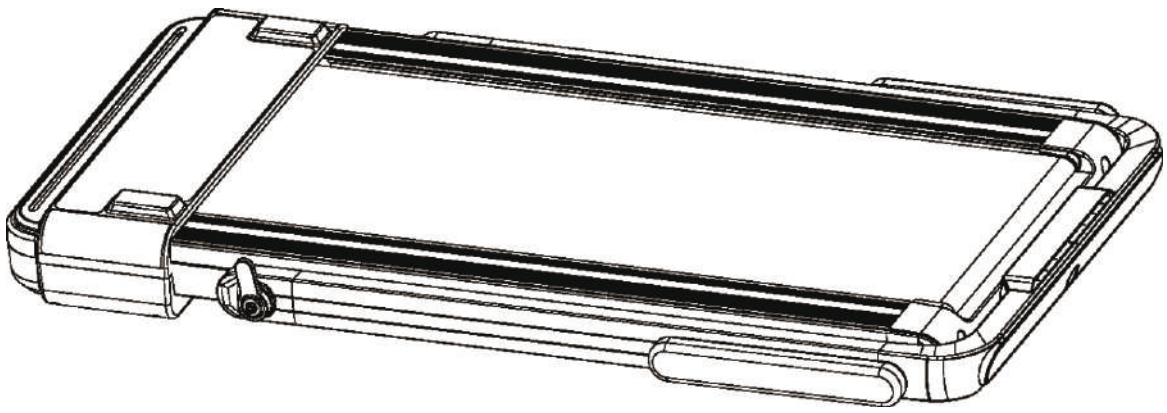

Step 1

Take the product out from the carton, then take off the PE bag and lay it on the flat ground.

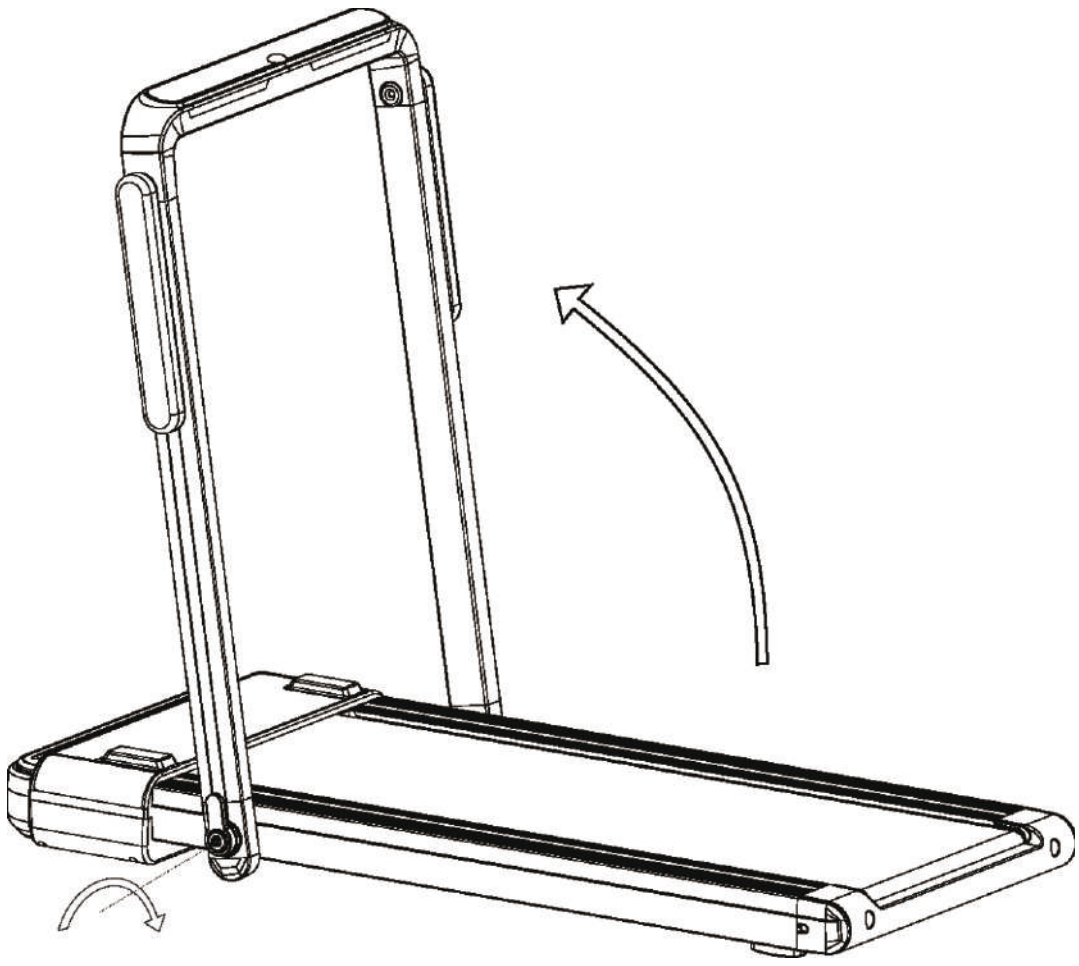

Step 2

Turn the both wrenches in clockwise at the end of the frame to loose the frame, then put the frame up， turn the wrenches in counter clockwise to lock the frame after this.

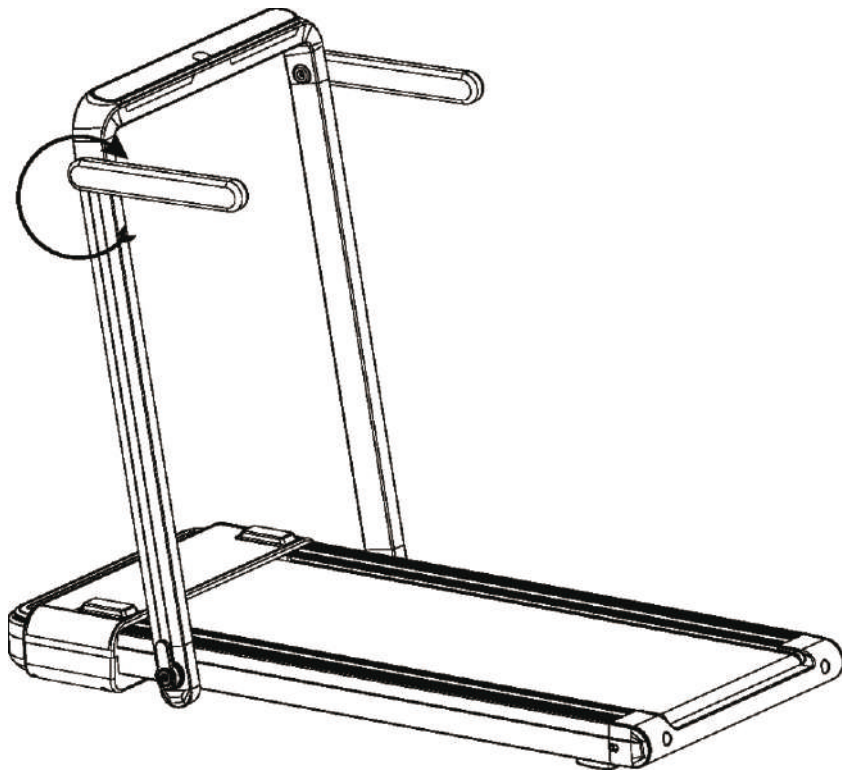

Step 3

Turn handles to horizon level in clockwise direction

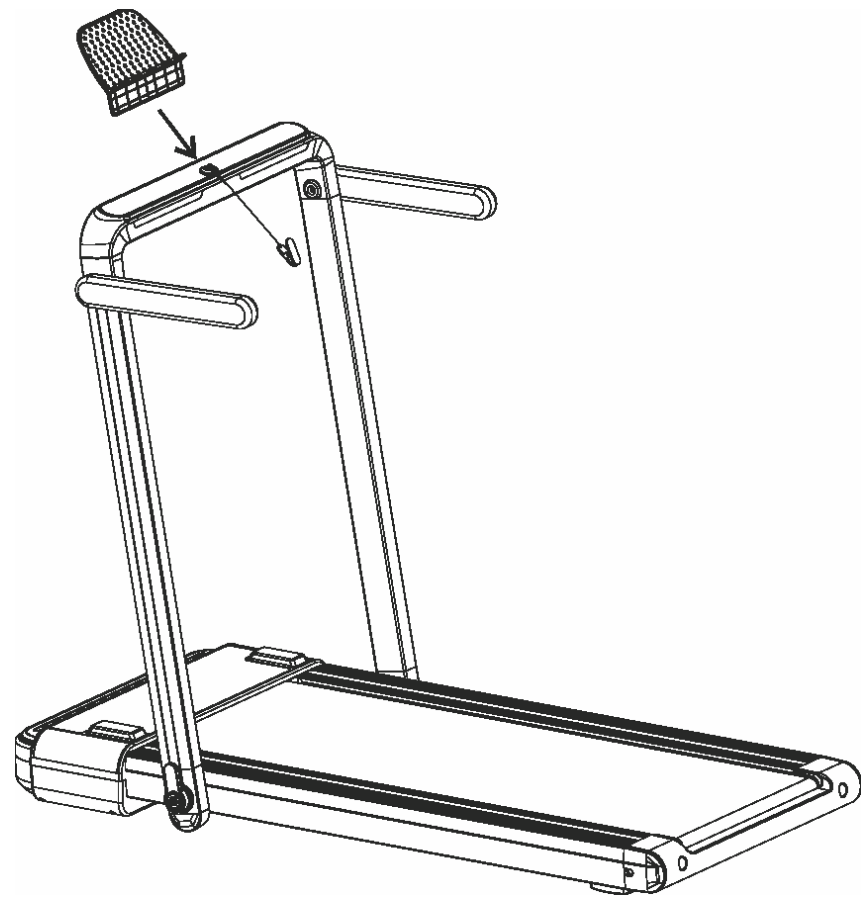

Step 4

Insert the phone holder into the square hole on the handle tube and fix. Then put the emergency stop device in the middle of the yellow area on the handle.

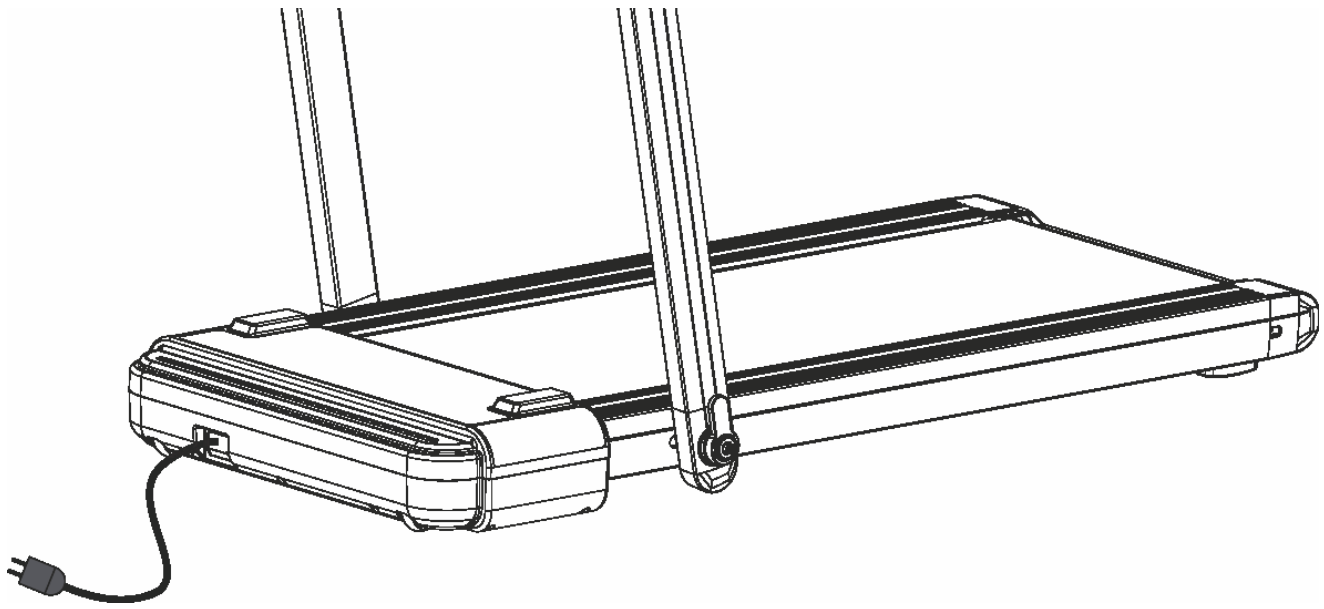

Step 5

Connect the plug to 220V power source and press the power switch, when the light is on, the treadmill is ready for use.

FOLDED MODE INSTRUCTIONS

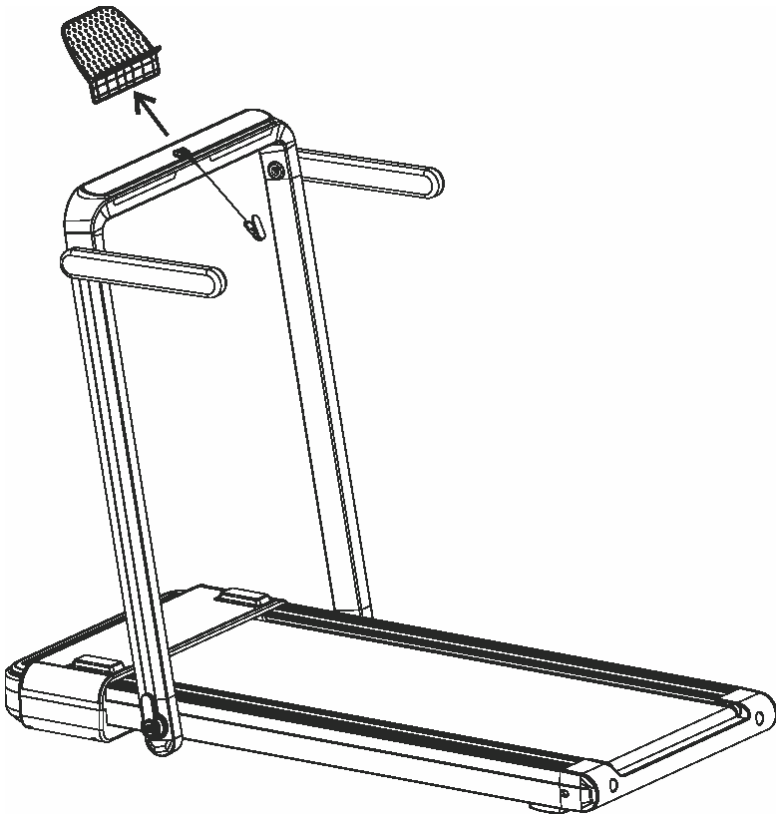

Step 1

Take off the phone holder when the product is expanded.

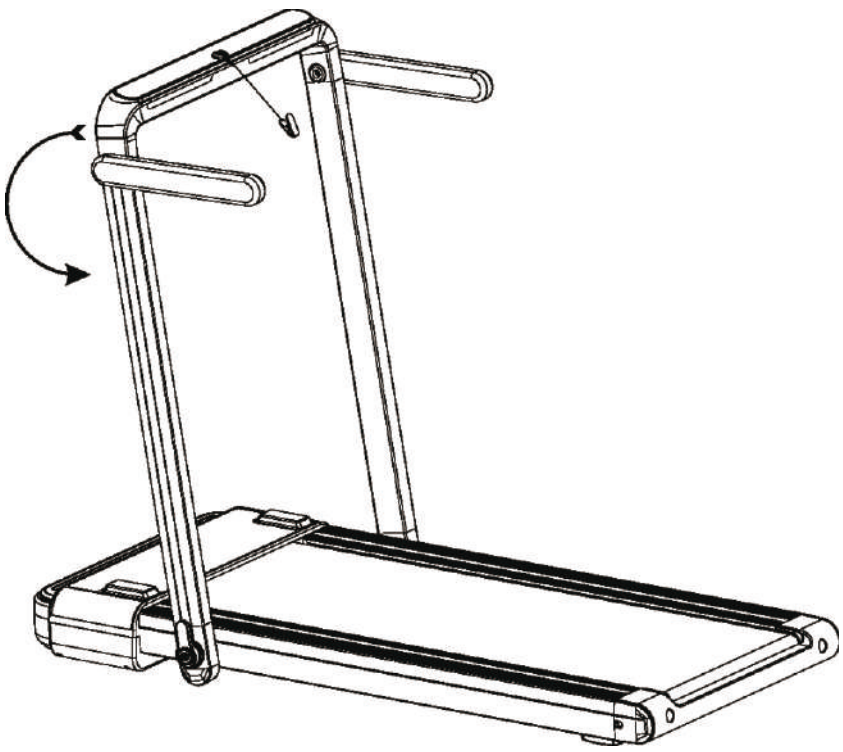

Step 2

Fold the two handles in counter clockwise direction.

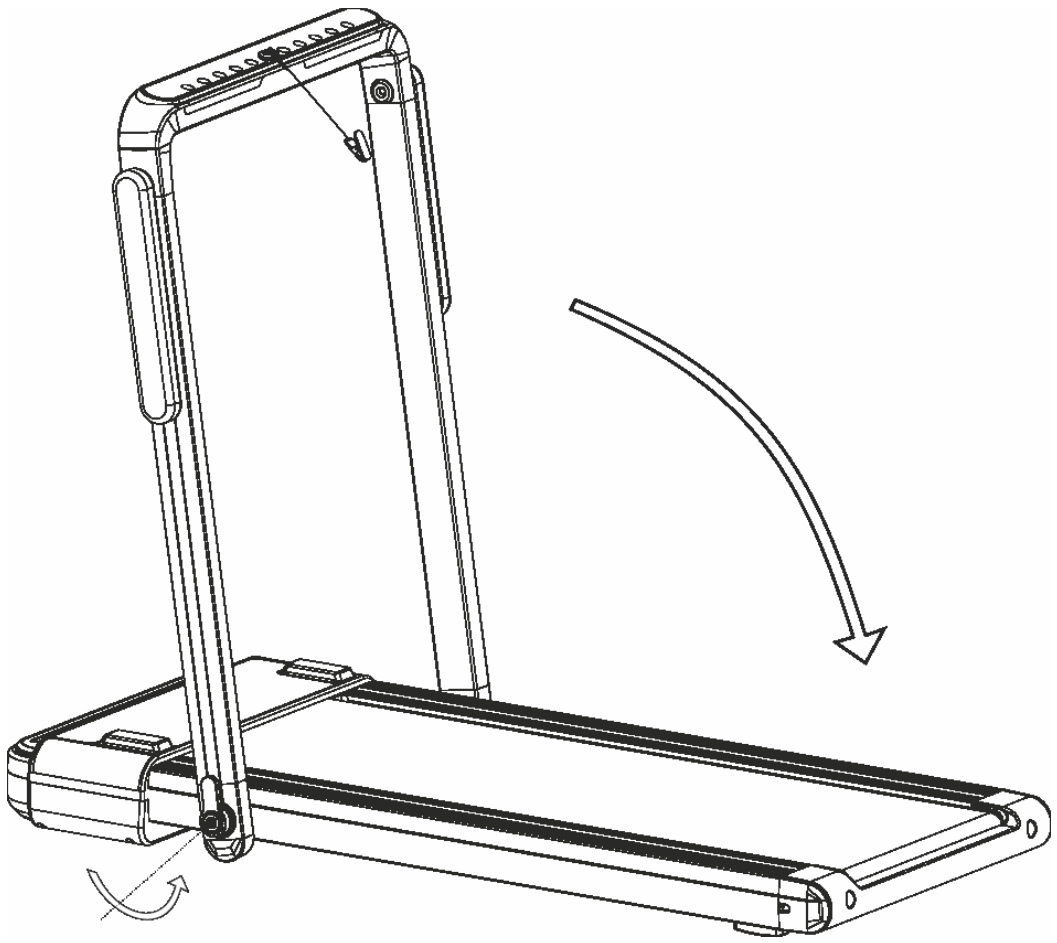

Step 3

Turn the both wrenches in counter clockwise at the end of the frame to loose the frame, then put the frame down,turn the wrenches in clockwise to lock the frame after this.

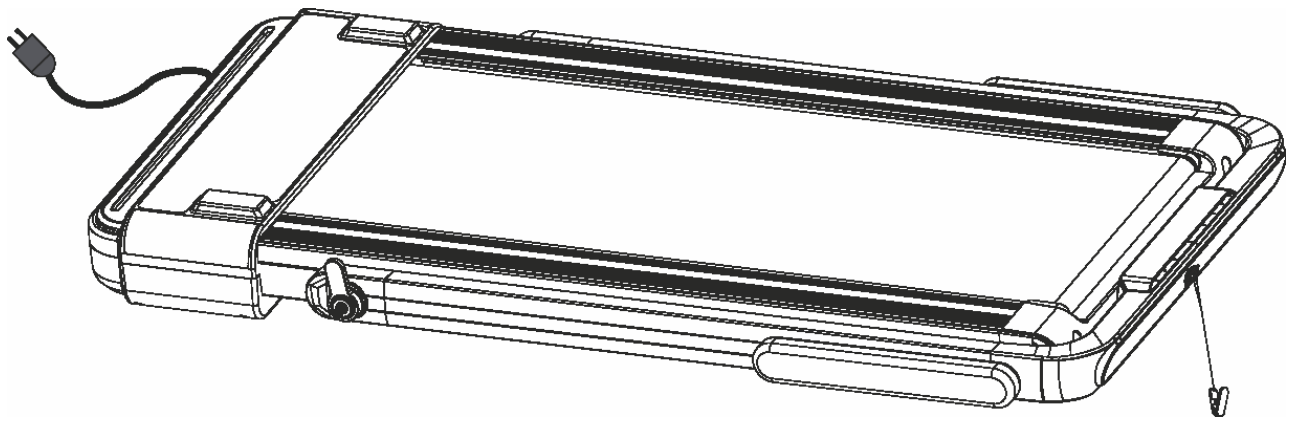

Step 4

Connect the plug to 220V power source（if the product is unplugged) and press the power switch, when the light is on, the treadmill is ready for use.

Note: The folded mode is low speed mode, you can place it in front of your office desk. The speed range is1-6 KM/h. Please stand on the running belt first then use remote control to start the product. Never step on the belt if the product is running, or it may cause unexpected situation.

06. Remote Control Instructions

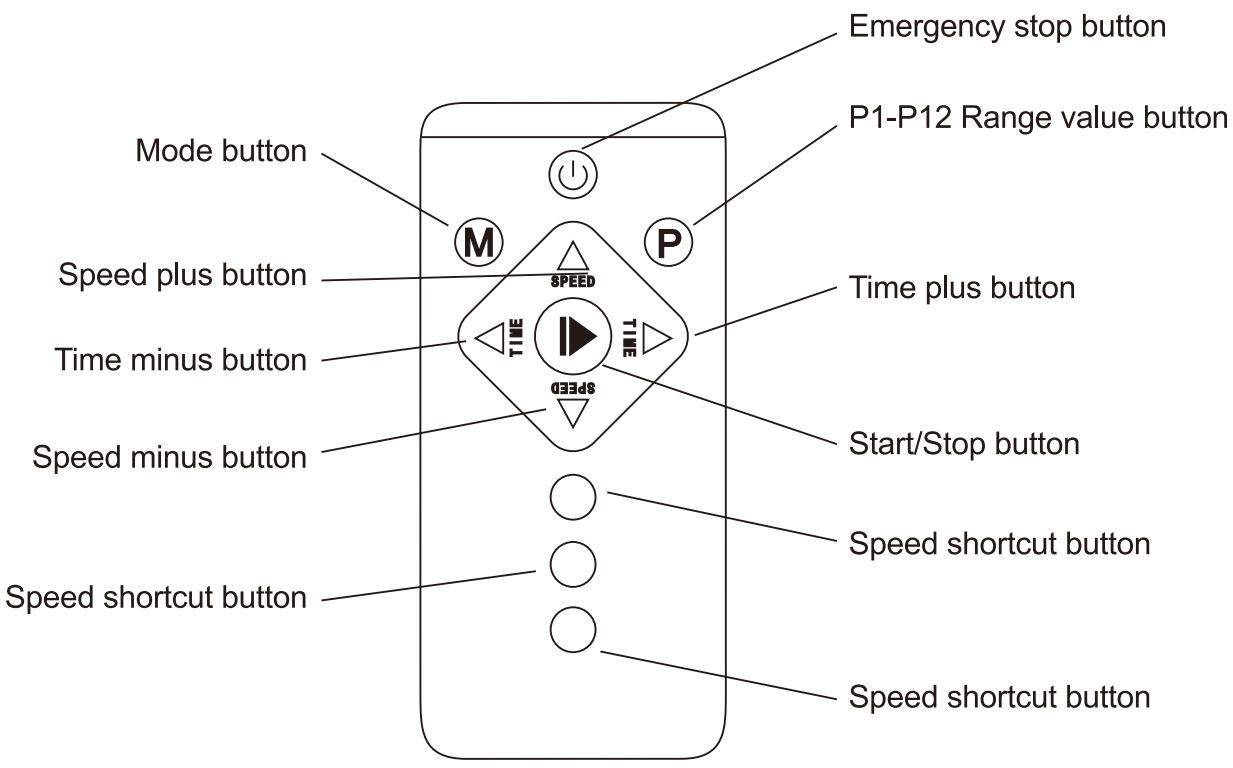

1.Emergency stop button: Press this button when an emergency occurs or an emergency stop is required.

2.Start/Stop button: When the power is turned on, the panel displays 000.You can press this button to start the machine.When you want to stop exercise, you can press this button to safely stop.

3.Mode button: Press this button to switch speed, time, calories, etc.

4.P1-P12 Range value button: Press this button to switch the automatic motion mode of the P1-P12 range value.

5.Time plus button: Press this button to increase the exercise time, or adjust the speed, calories,and distance in manual mode.

6.Time minus button: Press this button to reduce the exercise time,or adjust the speed, calories, and distance in manual mode.

7.Speed plus button: Press this button to increase the exercise speed, or adjust the speed, calories, and distance in manual mode.

8.Speed minus button: Press this button to reduce the exercise speed, or adjust the speed, calories, and distance in manual mode.

9.Speed shortcut button: Press this button to adjust to the corresponding speed.

07. EXERCISE ADVISES AND PLAN:

Warm up: do warm up exercise for 5~10 minutes before using this product
Breath: do not hold your breath when you are using this product,try to breathe by nose and coordinate with your movement. You should stop immediately if you are short of breath.
Exercise frequency: muscle should rest for 48 hours after exercising.
Intensity: it varies from person to person , please increase intensity gradually.
Diet: To protect the digestive system, please do not use thisproduct one hour after meal, also do not take any food in half hour after exercise. Try to not drink water when doing exercise toreduce visceral burden.
Stretching exercises: No matter what speed you run, stretching exercise is necessary, it can improve muscle activity and reduce the risk of sports injury. So you can follow the bellowing guidance after warming up, 5 times for each pose, and do it again after exercise.

1.Stretch down bend down relax shoulder and back then try to touch your feet, 3 times(picture 1).

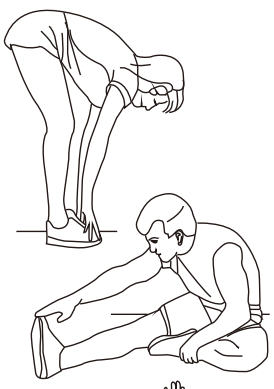

2.Stretch legs sit on a mat, stretch one leg and keep the other to stay balance then try to touch your toes of the straight legs, stay the pose for 10~15 seconds then repeat to the other leg, 3 times(picture 2).

3.Stand and put your hands on the wall or table, then push your body down and stay 10~15 seconds, 3 times for each leg(picture 3).

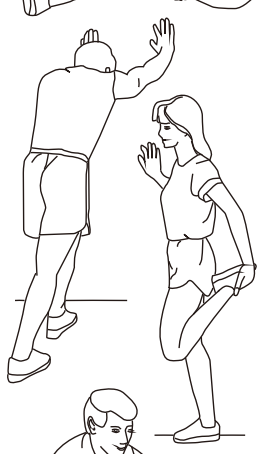

4.Ankle joint stretch stand and hold some-thing to keep balance, then pull one ankle to your Buttocks until you feel tense on leg muscle, stay 10~15 seconds, 3 times for each leg(picture 4).

5. Thigh stretch sit and keep feet against,then pull feet to groin, stay 10~15 seconds and do it for 3 times(picture 5).



08.PRODUCT INSTRUCTION

BRIEF INSTRUCTION

Vocabulary explanation:

Treadmill related: Speed

Mode: Manual Mode and Auto Mode

Manual Mode: Free adjustable mode without default setting values

Auto Mode: the mode with default setting values.

LED display:

1.SPEED

2.TIME

3.CALORIE/DISTANCE

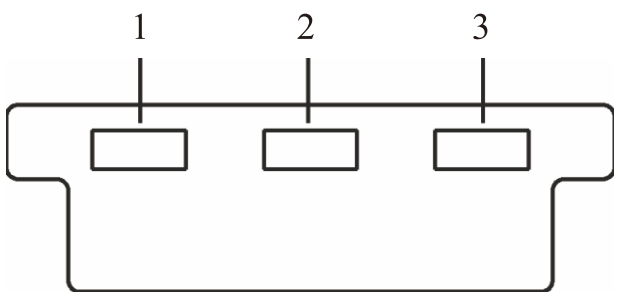

Keys



Keys on the product:

1.Speed hot keys ② ④ ⑥ ⑧ ⑩

2.Auto program Ⓟ

3.Mode

4.Speed up

5.Speed down

6.Start/stop

Parameters of expanded state

1.Voltage: 220V/50Hz

2.Minimum speed is 1KM/h

3.Maximum speed is 14KM/h

4.Under auto mode the minimum exercise time is 5 minutes, the maximum exercise time is 99 minutes.

5.Under manual mode, the maximum exercise time is 99 minutes.

6.Under manual mode, tthe maximum calorie is 999 Kcal

Parameters off folded state

1.Voltage: 220V/50Hz

2.Minimum speed is 1KM/h

3.Maximum speed is 6KM/h

4.Under auto mode the minimum exercise time is 5 minutes, the maximum exercise time is 99 minutes.

5.Under manual mode, the maximum exercise time is 99 minutes.

6.Under manual mode, the maximum calorie is 999 K-cal.

MODE DESCRIPTION

Auto mode under expanded state:

Please check the plug, emergency stop device and switch and make sure all are ok before using the product. Turn on the product the display will show 0:00, then press “start”the product will start to run after a 3 seconds count down, the display will show 1KM Speed, time and calorie also start to count, the product will stop automatically after 99 minutes,you can adjust speed by pressing “speed+” and “speed-”, the minimum speed is 1KM/h, the maximum speed is 14KM/h.

Auto mode under folded state:

Please check the plug, emergency stop device and switch and make sure all are ok before using the product. Turn on the product the display will show 0:00, then press “start”the product will start to run after a 3 seconds count down, the display will show 1KM/h. Speed, time and calorie also start to count, the product will stop automatically after 99 minutes,you can adjust speed by pressing “speed+” and “speed-”, the minimumspeed is 1KM/h , the maximum speed is 6KM/h.

MANUAL MODE ON REMOTE CONTROL

1.Press“Auto program”to choose program from P1-P12， the time will show 30minutes and keep blinking, press “Speed up”“Speed down”to adjust time, the minimum is 5 minutes and the maximum is 99 minutes.Press “Start/stop” the product will start to run after a 3 seconds count down, every time the product switches speed it will sound “di di di”.

2.Press “Mode” on control panel, the display will show H-1, the time will show 30minutes and keep blinking, press “Speed up”“Speed down”to adjust time, the minimum is 5 minutes and the maximum is 99minutes.Press “Start/stop” the product will start to run after a 3 seconds count down.

3.Press “Mode” on control panel, the display will show H-2, the distance will show 1.0 and keep blinking, press “Speed up”“Speed down”to adjust distance, the minimum is 1 mile and the maximum is 99 KM. Press “Start/stop” the product will start to run after a 3 seconds count down.

4.Press “Mode” on control panel, the display will show H-3,the calorie will show 50 and keep blinking, press “Speed up”“Speed down”to adjust calorie, the minimum is 20 k-cal and the maximum is 999k-cal. Press “Start/stop” the product will start to run after a 3 seconds count down.

09.MAINTENANCE LUBRICATING

The running belt must be lubricated with specialized silicone oil after using for a period.

1.Suggested lubricating frequency

Using time is less than 3 hours a week	Lubricate it every 5 months
Using time is 4-7 hours a week	Lubricate it every 5 months
Using time is more than 7 hours a week	Lubricate it every months

2.How to do the lubricating

To check whether your treadmill needs lubricating, you can hold the running belt and put the other hand to touch the bottom center of the running belt, if you can feel the wet silicone oil that means it does not need lubricating. If you feel the running belt is very dry that means your treadmill need lubricating.

A.How to lubricating (as picture)

B.Stop and fold the treadmill

C.Raise the running belt on the base, then try to put the silicone oil pot under the running belt and smear the silicone oil on the belt and both side of the treadmill, then set 1KM/H to make sure silicone oil lubricates every well, you can step the running belt from left to right to improve the lubricating effect.

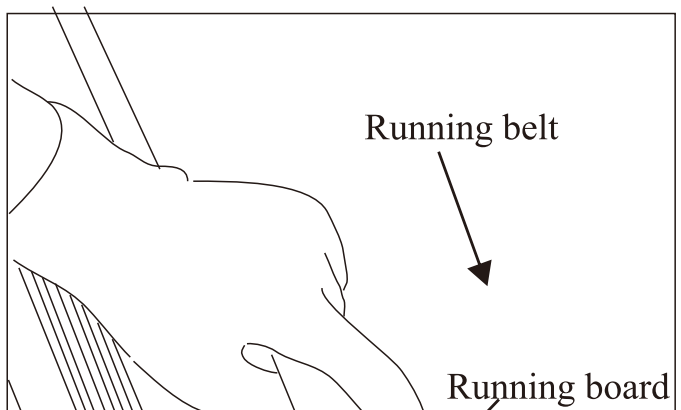

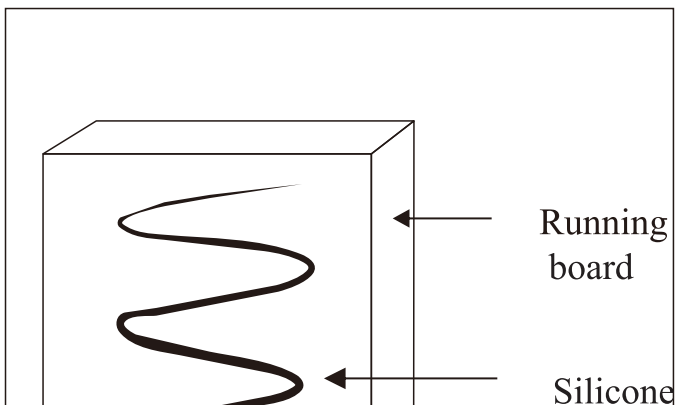

3.Adjusting the elastic tendency of running belt Every treadmill will set the elastic tendency before it leaves factory and after assembly, but it will become loose after using for a period.Just like it will stuck or slide sometimes, you can turn the adjusting bolt in clockwise direction, semi-circle a time (left and right at the same time) to adjust the running belt. Don't make it too loose or too tight, or the running belt will slide or the motor will be overloaded.
4.Running belt deviating.All running belt is in the right place when it is packaged. But there are some factors that will cause this situation.
1)The treadmill is not set flat
2)User does not step on the center of the running belt
3)Caused by 1 or 2 is easy to be solved, just set the tread-mill flat and let it idle for several minutes, the problem will be solved.If the deviating still exists, you can use the 6mm Allen-wrench adjust it in a quarter turn.Deviating is not in the warranty scale, user can maintain it as follow instructions. But please fix it as soon as you find the problem or it may break the running belt.

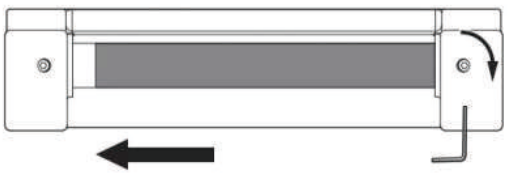

If deviating turns to right, then turn the left screw in counterclockwise direc-tion,Turn the right screw in clockwise direction.



If deviating turns to left, then turn the left screw in clockwise direction,turn the right screw in counterclock-wise direction.



Turn the left screw in clockwise direction with Allen wrench.



Turn the left screw in counterclockwise direc-tion with Allen wrench.

1.Running belt slipping: The running belt may slip or have unexpected stop during work time.
2.Adjust the blet: Adjust the screws around the belt in clockwise direction for 3 rounds,then adjust the belt as the belt deviation until the belt return to the middle of the base.

10. COMMON MALFUNCTION AND SOLUTION

Error Code	Malfunction	Cause	Solutions
E01	Signal error	1. Main single wire is lose between up and down control panel. 2. Main single wire is broken between up and down control panel. 3. Electrical head is broken; 4. Control panel is broken;	1. Reconnect the signal line; 2. Change a new sign al line; 3. Change a new electrical head; 4. Change a new control panel;
E02	Lower control panel and Motor malfunction	1. Motor is disconnected 2. Motor is open circuit, broken; 3. Control panel is open circuit, broken;	1. Reconnect and make motor lines firmer; 2. Change a new motor 3. Change a new control panel
E03	Lower control detects speed anomalies	1. The PWM driver circuit of the lower controller is faulty.	1. Contact customer service for maintenance
E04	Motor over voltage protection	1. Your local power voltage is unstable with much high peak voltage 2. Wrong preset wheel diameter value; 3. Control panel is under malfunction;	1. Need to add a filter regulator to keep voltage stable; 2. Reset the wheel diameter value to fit the rated voltage; 3. Replace a new control panel.
E05	Product over-current protection	1. The product is over loaded; 2. There is foreign matter stuck in motor or rolling axe; 3. The roller is not lubricated enough and the resistance increases. 4. Control panel is under malfunction; 5. The motor is under malfunction and the resistance increases.	1. Reduce load, do not let it over rated load; 2. Take out the foreign matter; 3. Increase lubricant! 4. Change a new control panel 5. Change a new moto
E06	The voltage is too low abnormally	1. The power supply voltage is too low 2. The circuit of the lower control board is faulty and the resistance increases.	1. Contact customer service for maintenance
E07	Unable to boot up	1. The safety lock falls off 2. The electronic watch safety lock system is faulty	1. Check if the red safety lock is placed 2. Place the safety lock in the position specified on the electronic watch

OTHER MALFUNCTIONS AND SOLUTIONS

1.No display
a:Check whether the power is plugged correctly and switch on,whether control is fuse blown;
b:Whether the 4 core line of control panel and display is connectcorrectly;
c:Whether the control and transformer is intact.

2.Motor does not work
a:Please check whether all the wires are connected well;
b:Please check the error code displayed on the console;Whether your hands contact the sensor close enough

3.Touch screen is insensitive:
a:Whether the touch screen is moist;
b:Whether there is sweat in your hands

NEED HELP?

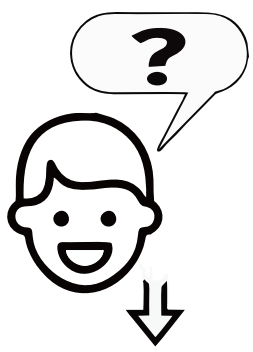

LET US HELP YOU

EU Email: servicestar2024@outlook.com
North America Email: wenokerdirect@outlook.com