OWNER'S MANUAL

CAMBRO PRO CART ULTRA®

This manual applies to all Pro Cart Ultra models.

CAUTION: Please read all instructions before using the cart.

Original Instructions verified by Cambro Mfg Co

ISO 7000-0434 ISO 7000-0790 Passive and/or Hot Models

Model # _____

Serial # _____

Date Installed _____

CAMBRO®
TRUSTED FOR GENERATIONS™

www.cambro.com

Table of Contents

I. Introduction 2
II. Safety Instructions and Warnings 2-3
III. Rail Installation and Capacity Guide 4
IV. Operating Instructions for Electric Use 5-6
V. Operating Instructions for Non-Electric Use 6
VI. Care & Maintenance 6-8
VII. Troubleshooting Guide 8-9
VIII. Instructions for Security Package (S) Models 9
IX. PCU/PCUL Hitch Installation 10
X. Replacement Parts 11
XI. Warranty and Product Liability 12

I. Introduction

Congratulations on the purchase of your new Cambro Pro Cart Ultra®! This Owner's Manual provides you with a step-by-step guide to operating and maintaining your new insulated transporter – versatile enough to hold hot or cold food. If you have any further questions, please contact your Cambro Sales Representative, visit www.cambro.com or call our **Customer Service Department at 800.833.3003 (International customers please call 1.714.848.1555).**

II. Safety Instructions and Warnings

IMPORTANT: *Read all instructions prior to use and save for future reference.*

- Follow all warnings marked on unit.
- Use only type of power supply (voltage, phase, frequency) indicated on the heater unit label.
- Do not use if power cord is frayed or damaged.
- Connect unit to properly grounded power source.
- Use only manufacturer authorized power cord and replacement parts.
- **Warning!** Do not use this equipment in wet or damp conditions.
- **Warning!** Unplug unit prior to cleaning or service.
- **Warning!** Remove power cord prior to cleaning. Clean with damp cloth only.
- **Warning!** Do not submerge in water and never spray water on or near it.
- **Warning!** Do not get the thermometer wet in any way.
- **Warning!** Unplug the power cord before removing the hot or cold module.
- **Warning!** Only Cambro Authorized Service Agent or qualified foodservice equipment technician should open the inner cover of any electrical items for servicing.
- During normal operation, check the heater screws for tightness at least once a week.
- Any operating problems not identified and corrected by instructions in this manual should be referred to a qualified service personnel (electrician or foodservice equipment technician).
- **Caution:** Maximum load for this cart is 560 pounds (254 Kg). Empty weight 245.90lb (111.5Kg) to 274.5lb (124.5Kg) based on configuration
- **Caution:** Maximum load for each rail set is 40 pounds (18,14 Kg).
- **Warning!** Do not store explosive substances such as aerosol cans with flammable propellant inside the appliance.
- This appliance can be used by children aged from 8 years and above and persons with reduced physical, sensory or mental capabilities or lack of experience and knowledge if they have been given supervision or instruction concerning use of the appliance in a safe way and understand the hazards involved.
- Children shall not play with the appliance.
- Cleaning and user maintenance shall not be made by children without supervision.

Caution: Metal rails and heater housing are hot when cart is in use.

For all electric PCU cold module, plug into 100-120 VAC (110v models) or 200-230VAC (220v models) 50/60 HZ electrical receptacle. Product label located on the unit clearly indicates power requirements.

Electrical Specifications
(Per Compartment)

	HOT 110V	HOT 220V	COLD
REQUIRED VOLTAGE	100-125 VAC	200-230 VAC	100-230 VAC
MAXIMUM AMP	4.6a	2.3a	3.26a, 1.42a
WATTS / HEATER OR COOLER	529w	506w	326.6w
HERTZ	50/60	50/60	50/60
PHASE	Single	Single	Single
ALTERNATE PLUG TYPES AVAILABLE FOR THESE COUNTRIES	US, Canada, Mexico, China, Europe, UK, Ireland, Australia, South Africa, Japan		
POWER CORD LENGTH	9 ft./ 2,7 m		

** If country is not listed, please call Cambro Customer Service for details.*

IMPORTANT!

The conductor having green/yellow insulation shall only be connected to a terminal marked ⏚ or ⏚
If it is essential for the safety of the appliance, the tag shall be provided either with a wiring diagram showing the connection of the other conductors or with the following text:

For the connection of the other conductors, see the enclosed instructions for installation.

III. Rail Installation and Capacity Guide

Before operating the cart, install rails based upon your facility's needs.
Each cart ships standard with 8 pairs of rails per compartment. Save extra rails for future use.

TIP: It is easier to start rail installation from the bottom and move up.

1. Follow the number guides etched into the columns of the cart to place your sheet pan, food pan, tray or pizza box in the correct position. For example, to achieve standard capacity for full-sized sheet pans, place the rails at positions 1, 3, 5, 7, 9, 11, 13 and 15.
2. Insert the top tabs into the front and corresponding middle and rear slots of the column.
3. Slide the rails towards the back of the cart then rotate it down into a nested position.
4. Install the subsequent rails into position following the appropriate numbering guide. Once the rails have been installed on one side of the cart, repeat instructions to configure the other side.
5. To install position 16, remove screw and bumper, remove side column, insert rail, slide column back in, replace screw and bumper. Repeat on other column.

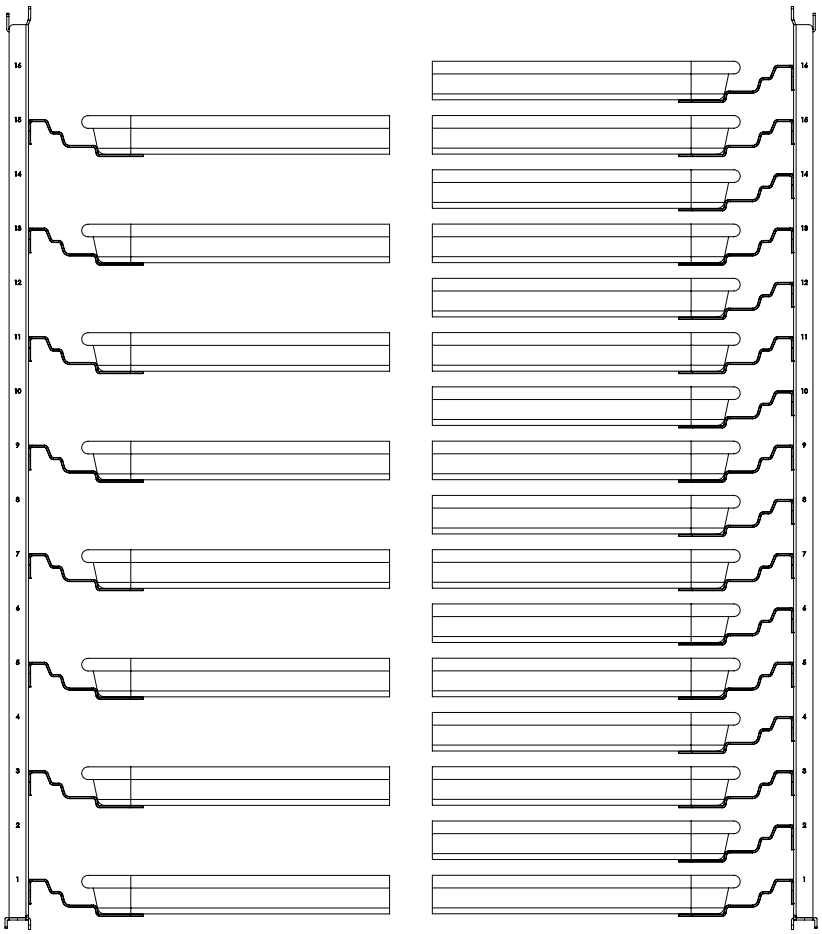

TYPE of CONTAINER	TALL CART STANDARD CAPACITY	LOW CART STANDARD CAPACITY	SET-UP AT NUMBERS ON COLUMN	TALL CART MAXIMUM CAPACITY	LOW CART MAXIMUM CAPACITY
18" x 26" (45,7 x 66 cm) Full Size Sheet Pans	16	8	**1, 3, 5, 7, 9, 11, 13,15**	32*	16*
13" x 18" (33 x 45,7 cm) Half Size Sheet Pans	32	16		64*	32*
20 11/16" x 13 1/4" x 2 5/16" Wire Basket	32	16	**1, 3, 5, 7, 9, 11, 13,15**	32	16
GN 1/1 Hotel Pans 2 1/2" (6,5 cm) Deep	32	16	**1, 3, 5, 7, 9, 11, 13,15**	32	16
GN 1/1 Hotel Pans 4" (10 cm) Deep	20	10	**1, 4, 7, 10, 13**	20	10
40 x 60 cm (20 1/2" x 23 1/2") Trays	16	8	**1, 3, 5, 7, 9, 11, 13,15**	30*	16*
32 x 53 cm (12" x 20") Trays	32	16	**1, 3, 5, 7, 9, 11, 13,15**	64*	32*
Pizza Boxes 16" x 16" x 2" (40,6 x 40,6 x 5,1 cm)	16	8		16	8

*Additional rails required. Contact your local Cambro rep or dealer to purchase additional rails.

IV. Operating Instructions for Electric Use

NOTE: *Units are designed to hold pre-heated hot food and pre-chilled cold food only.* ***ALWAYS*** *pre-heat or pre-chill unit.* ***NEVER*** *use to heat up or cool down food temperatures.* ***WARNING!*** *Not intended for use outdoors.* ***NEVER*** *use in wet or damp conditions. Refer to Section II for Safety Instructions and Warnings.*

Hot module
On/OFF Switch

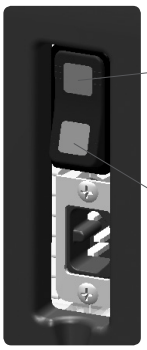

Light: When light is on that indicates power to the unit

Amber Light: Turns on to indicate active heating. When cabinet reaches temperature the light will turn off.
Factory set: at 150˚F to 165˚F (65,6˚C to 73,9˚C)

Hot Electric Models:

1. Plug unit into correct power outlet. Use ONLY power cords supplied by Cambro Manufacturing.
2. Switch on power button.
3. Pre-heat cabinet for 30 to 45 minutes before loading with hot food.
4. Load food.

NOTE: Hot module will switch on and off as necessary during operation to maintain factory set temperatures.

Tips to Maximize Performance

A. DO NOT load food over 190˚F (87,7˚C) as this can damage the compartment or trip the high limit protection on the heater.
B. Leave a gap in the back of the cart between the heater and the pan for good air flow and not to impede performance.
C. If hot food is being loaded into the cart directly from the oven, keep the door of the cart open until temperatures are near the 190˚F (87,7˚C) temperature.

This practice will help protect the cart, slow down any further cooking of the food and maximize hot food holding quality.

Cold Module Controller (setting the temperature)

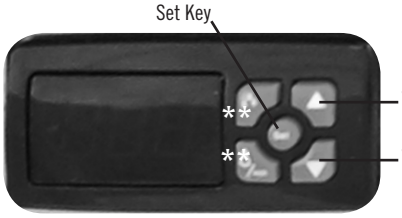

Hold set key while pressing arrow to increase or decrease temperature

Cold module is factory set at 32.5˚F (0,28˚C) and can be adjusted up to 40˚F (4,4˚C)

**Buttons on left have no function on this unit.

Cold Electric Models:

1. Plug unit into correct power outlet. Use ONLY power cords supplied by Cambro Manufacturing.
2. Place the back of the cart at least 6" (15,2 cm) away from any wall or large items to promote good airflow. Temperature performance of the Cold Modules may be reduced if airflow is poor.
3. Turn on power switch to the right of the AC power inlet. The digital display will illuminate and display the temperature of the compartment.
4. Set temperature between 32.5˚F and 40˚F, see *Setting the Temperature.*
5. Pre-chill cart for 90 minutes before loading food.

NOTE: Cold generation may cause condensation. Wipe up excess water.

NOTE: Cold modules will cycle on and off as the cabinet reaches the set temperature.

DO NOT use unit as a refrigerator. Turn off after 24 hours of continual usage.

IV. Operating Instructions for Electric Use (continued)

Room Air Temperature	Cold Module Max Temperature
80˚F and below	Max cooling 31˚F
85˚F	35˚F
90˚F	40˚F

Cold Modules based on ambient room air temperature with a delta of 50˚F

TIP: *All electric units can be turned into a passive holding cabinet by unplugging after pre-chilling or pre-heating.*
Unplug the unit after the food is loaded, keep door opening to a minimum and the cart will hold temperature for 4+ hours.
***See Passive holding chart temperatures below.*

V. Operating Instructions for Non-Electric Use

Non-electric (Passive Units) Models**

Hot / Cold Holding Test Results for Passive Holding

Hot Holding Test Results **Temperature loss averaging 3˚F/hr (1,5˚C/hr)**

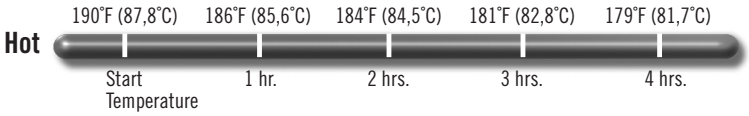

Cold Holding Test Results **Temperature gain averaging 0.7˚F/hr (0,4˚C/hr)**

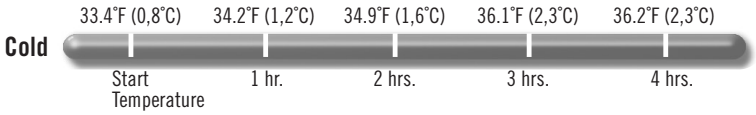

**Based on test with 10 each 4" (10 cm) deep H-Pans™ with GripLids® filled with hot water at starting temperature of 190˚F (87,8˚C) held in compartment with door shut. Water temperature dropped an average of only 3˚F (-16,1˚C) /hr.

Transport Cart Operation

- Before transporting or relocating the cart, ensure doors are shut and latched securely. If electric, turn off power, unplug and store the cord in the holding straps locate in the back of the cart.
- Insulated PCU carts will hold food at safe temperatures for 4+ hours unplugged**. (see chart above)

Changing the Modules:

Tools Needed: Philips #3 Screwdriver (manual or electric)

Place cart against a wall or have a helper hold the module in the back so it doesn't fall.

1. Put the cart's brakes on and make sure unit is unplugged.
2. From the inside of the cart, carefully remove SS screws and washers at the corners of the module.
3. Push module from the inside, make sure there is someone to receive the unit or it is against the wall.
4. Insert new module.
5. Use SS screws and washers to re-attach to the module to the cart. Tighten the screws firmly but not excessively. DO NOT use tools other than a #3 Phillips screwdriver. During normal operation, periodically check screws for tightness.
6. Store modules when not in use in a cool, dry place away from grease and heat. DO NOT store on top of oven or on the cart. Cambro® Food Storage Box DB18266CW (sold separately) is a suitable storage option.

VI. Care and Maintenance

A. MODULES

WARNING! *Completely cool heater unit prior to cleaning or maintenance.*
WARNING! *Do not submerge heater or cold module in water or spray water on it.*
WARNING! *Do not get the thermometer wet in any way.*
WARNING! *Unplug grounded power source from module prior to cleaning.*

Instructions for Resetting Heaters

NOTE: *Normal operation of the heater is controlled by an automatic cycling "Control Thermostat." Failure of the control thermostat may cause the temperature inside the compartment to rise to temperatures that could cause damage to the plastic.*
A second, manually resettable "Hi-limit Thermostat," is built into the heater circuit. This device will shut off power to the heater in the event the temperature in the cabinet reaches to 195˚F (90,6˚C). The heating unit will not return to normal operation until the reset button on the hi-limit thermostat is depressed. Other factors can cause the hi-limit thermostat to shut off power, such as fan failure or placing food pans inside the compartment with temperatures higher than 190˚F (87,8˚C).

CAUTION: Electrical Shock Hazard!

Before attempting to reset the hi-limit thermostat, unplug the heater power cord from the power source and from the heater.
WARNING! *Only use "non-metal" tools to depress the reset button.*

Do not bypass or alter the thermostats in any way.

1. Remove the power cord from the wall outlet or power supply and remove the other end from the front of the heater.
2. Open the door, reach into the compartment and hold the heater firmly while you remove the 5 SS screws with washers, holding the heater against the inner face of the module.
3. Place the heater on a stable surface with the metal section facing down. Locate the small round hole in the cover with the word RESET next to the hole.
4. Using a small diameter, round, non-metal item such as a rigid plastic stir stick or wooden skewer stick, guide it through the hole and depress the button on the hi-limit thermostat as seen in the figure below.
   NOTE: The Amber light will not be active when the high-limit thermostat has been tripped along with the loss of the heater element.
5. Remove the item you used to depress the button and re-attach the heater to the module with the screws and washers.
6. Plug the cord into the heater and then to the power source. Switch on the heater and verify it is heating up to the normal temperature.

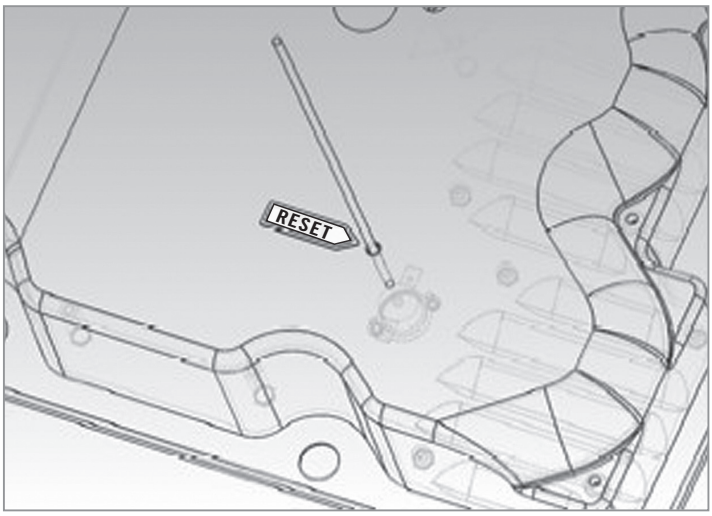

Cleaning Modules

Modules should be cleaned when they look dirty or as part of a preventive maintenance schedule to ensure performance of the cart.

Place cart against a wall or have a helper hold the module in the back so it doesn't fall.

1. Put the cart's brakes on and make sure unit is unplugged.
2. From the inside of the cart, carefully remove 4 SS screws and washers at the corners from the module.
3. Gently push module from the inside and remove from cart.
4. Clean components and module with a moist soft cloth and mild detergent to remove dirt and grease.
5. Completely air dry all components or wipe with dry, clean soft cloth before re-assembling and using.
6. Carefully place heater into the recessed area of the inner face of the module. Align AC inlet for power connection with rectangular hole through the module.
7. Use 4 shorter SS screws and washers to re-attach the heater to the module. Tighten the screws firmly but not excessively.

Do not use tools other than a #3 Phillips screwdriver.

8. Reinstall module to the cart with the 4 SS screws.
9. During normal operation, periodically check screws for tightness.
10. Inspect plug blades and cord, place cord If frayed or blades or prongs are missing bent or broken.

Cleaning Tip: Wipe up any spills as soon as possible. Clean cart regularly to avoid heavy dirt build up. Leave door open after use so cart can air out.

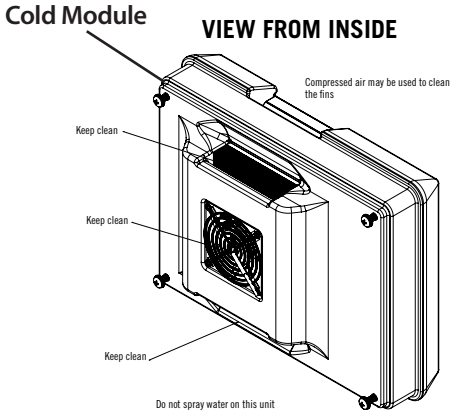

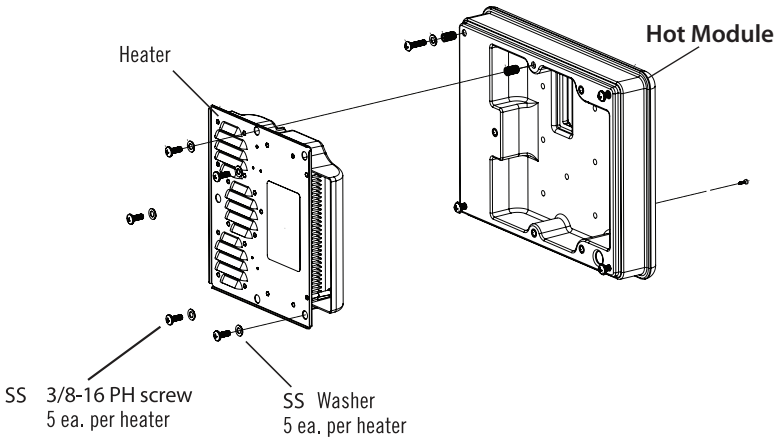

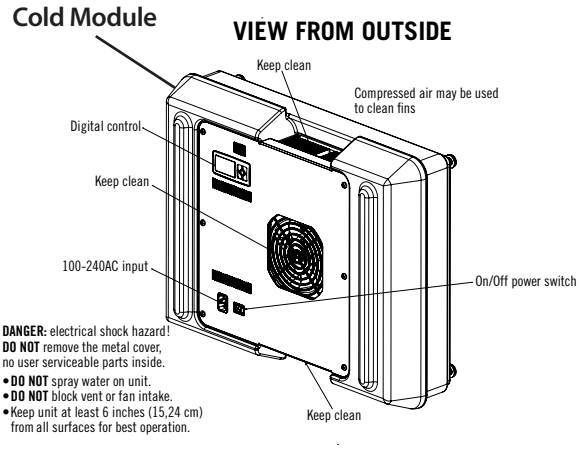

VI. Care and Maintenance (continued)

B. CART BODY

1. Clean with mild detergent, hot water and a soft cloth. DO NOT use detergents or cleaners containing ammonia or bleach.
2. Hand wash using a soft cloth or brush to clean all interior and exterior surfaces. DO NOT use steel wool or abrasive scrub pads or brushes.
3. Use a clean moist soft cloth to remove any remaining soap and dirt.
4. Air dry or dry cart outside and inside with clean, dry, soft cloth.

C. CASTERS

Caster bearings need to be lubricated with a high quality multi-purpose grease that has good extreme pressure and anti-wear characteristics, as well as withstands temperature range that fits the application requirements. Wheel and swivel bearings last longer if lubricated regularly. Some lube applied to friction points on the wheel hub, washer and leg surfaces of straight roller bearing systems reduces drag and improves reliability. Normal conditions may warrant lubrication every six months, but once a month may be necessary in extreme applications, such as corrosive or exceptionally dirty environments. Cart washings may necessitate lubrication after each wash.

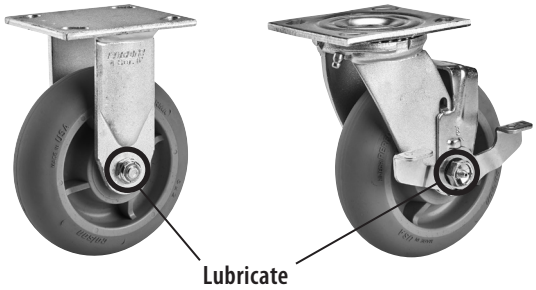

VII. Troubleshooting Guide

Warning! *Hazard of Electric Shock — Disconnect power supply before servicing. Any operating problems not identified and corrected by instructions in this manual should be referred to qualified service personnel (electrician or foodservice equipment technician). No user-serviceable items under the inner cover of the electrical units. Only qualified service personnel should open the inner cover of any electrical device.*

Problem	Possible Causes	Possible Solutions
Unit is plugged in but does not heat or cool at all.	• There is no power or an inadequate amount of power. • Power cord is not fully connected to the power source or to the heater or to the cooling unit. • Power cord is damaged. • Heating or cooling unit is damaged.	• Check the power supplied to the unit. It should match the requirements on the unit's label. • Make sure both ends of the power cord are connected securely. • Always replace damaged power cords with Cambro authorized power cords. • Replace the heater or cooling unit. Contact Cambro Customer Service.
Unit operates for more than 1 hour but does not achieve the expected temperature.	• Door is not fully closed. • Power cord is damaged and is causing intermittent power to the unit. • Thermometer is damaged or not working properly. • Heating or cooling unit is not working properly.	• Make sure the door is fully closed. Small gaps are ok and will not affect the performance. • Always replace damaged power cords with Cambro authorized power cords. • Check the temperature inside the compartment with a verified thermometer, placed in the center of the compartment. • Check fans for obstructions. If none found, replace unit. Contact Cambro Customer Service.
Persistent odor inside the cabinet.	• Initial start-up of unit. • Food left in the cabinet for overly-long holding periods.	• For first-time use, plug in and run the unit with the door open for 1 hour to air out the cabinet. • Place a pan of water with some baking soda in it and turn on the heater for 1 hour. • If smell is still persistent please contact Cambro Customer Service.
Unit stopped heating or cooling during normal operation.	• The compartment temperature exceeded 190˚F (87,8˚C), causing the hi-limit thermostat to shut power off to the heater. **NOTE:** Fan may remain running. • Fans are not operating properly. • Control thermostat is not working.	• Please refer to page 6: Instructions for Resetting Heaters. • Replace Fans: Fans on the cooling unit are critical. Contact Cambro Customer Service. • Replace control thermostat. Contact Cambro Customer Service.

NOTE: *For service please contact Cambro at 800-854-7631 X4118.* Please refer to the model number and serial number when you call in. *Units under warranty should be serviced by Cambro Authorized Service Agent Only.*

VII. Troubleshooting Guide (continued)

In normal operation, the probe temperature will be displayed. The display blinks when waiting for a parameter to be saved or when there is an error saving a parameter to memory. The following messages can also appear:

ERP1 Probe Error (check wiring or replace probe)

Eri Internal Parameter Error (factory default programming)

ALH High Temperature Alarm

ALL Low Temperature Alarm

ooo Open Probe Error

--- Short Circuited Probe Error

Please contact service if problem persists.

VIII. Instructions for Security Package (S) Models

1. Remove the #10 Pin-in-Torx screw from the Black Rubber retainer with a T-25 PIT driver bit.
2. Slide the column out of the compartment and verify the rail positions at the desired positions for your application.
3. Install two stainless steel rods (see image) through the small holes in each of the lower tabs of the rails assembled to the column. Additional rods can be purchased and installed in the center positions for added security.
4. Verify that each rail tab has a rod threaded through its hole.
5. Slide the completed assembly back into the compartment and re-install the screw back into the original hole.

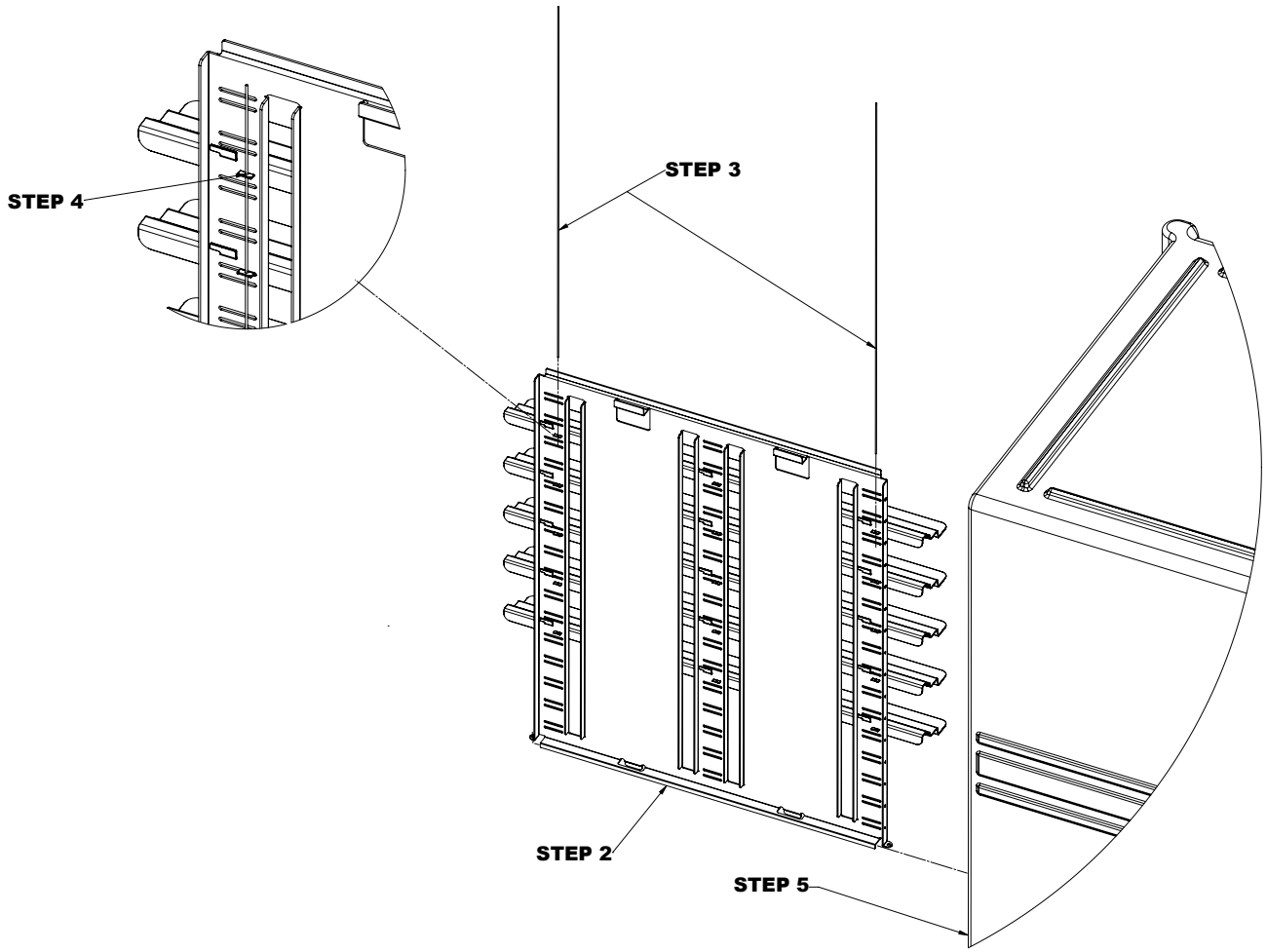

IX. PCU/PCUL Hitch Installation Instructions

1. Place cart on it's side.
2. Line up Chassis Plates with molded-in steel threaded inserts.
3. Use Hex Head Bolt and a washer with each bolt. Tighten snug (Do Not overtighten). Use removeable thread-locker.
4. Attach Hitch Ball (if using) and Tow Bar.
5. Insert Locking or Non-Locking Pin to secure.

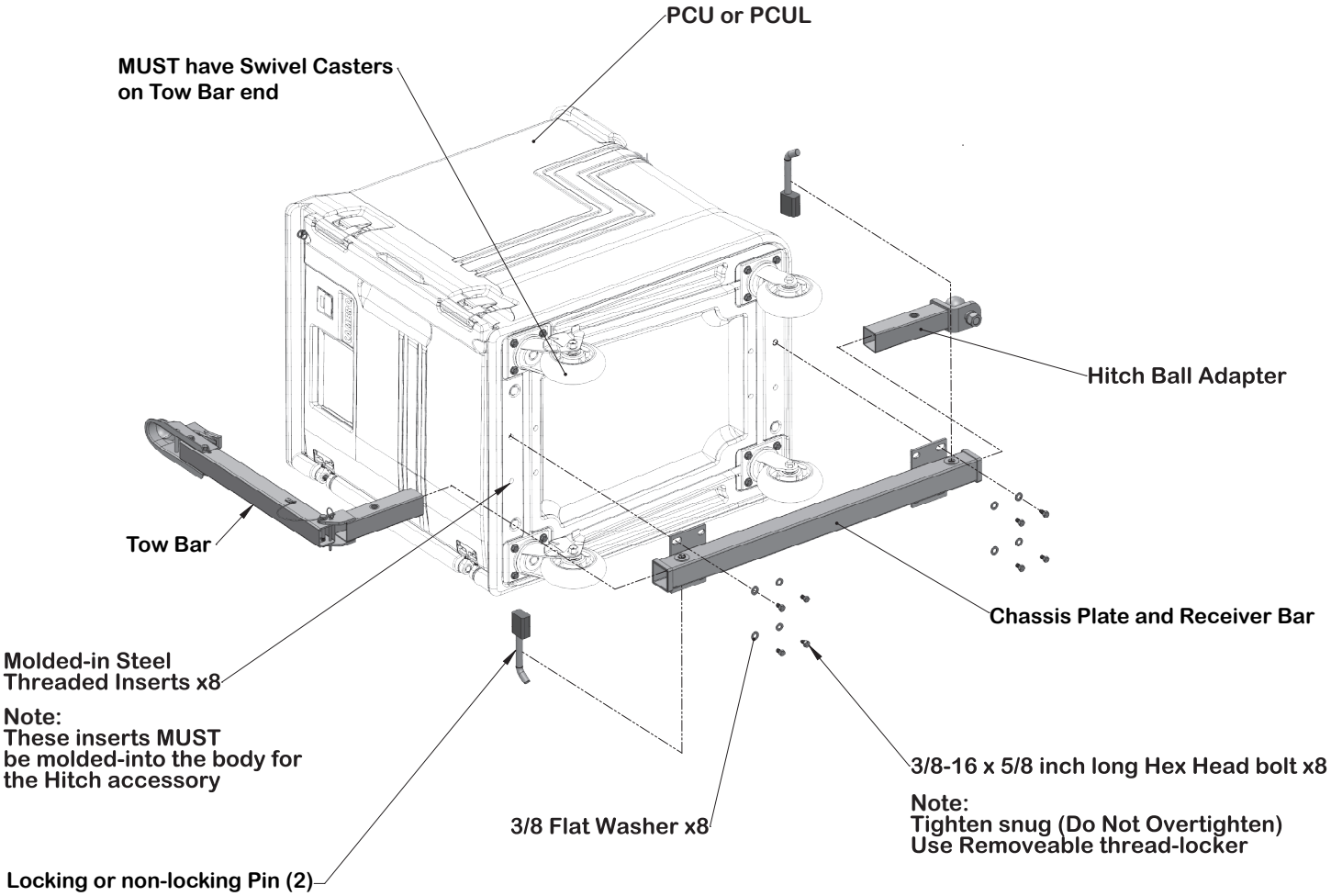

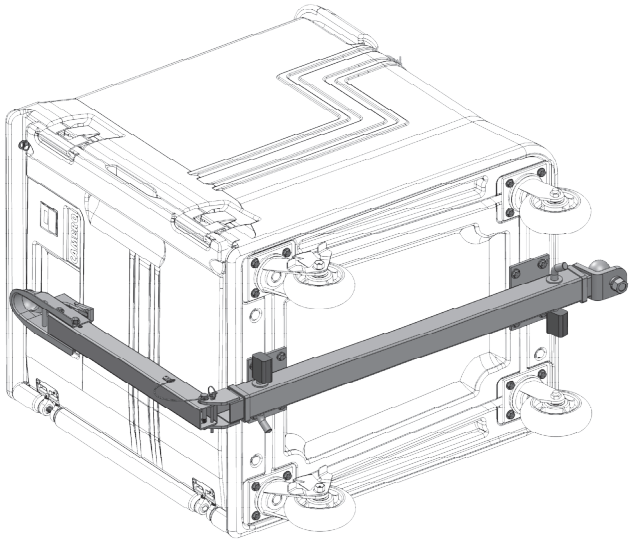

WARNING! *Components and Cart, with installed Hitch are* ***NOT*** *intended for use on the STREET or HIGHWAY. Pulling speed should* ***NOT*** *exceed ten (10) miles per hour. When the Tow Bar is not in service, it should be pinned in the vertical position or completely removed from the cart to reduce a trip hazard.*

CAUTION! *Careful attention is required while towing these carts. It is* ***NOT*** *recommended to connect more than six (6) carts together. Unplug power before moving and confirm all doors are closed and latched.*

X. Replacement Parts

The model number of the Cambro cart is required to determine the correct replacement part. The cart model number can be found on the left side of the cart. Each electrical item has a label marked with serial and model number. For all electric and non-electric models that begin with the prefix PCU:

TO ORDER REPLACEMENT PARTS:

- Call Cambro Customer Service at 800 833 3003 or
- Call International 1 714 848 1555
- Fax your order to 1 714 842 3430 or
- Call your local Cambro Representative or Equipment and Supplies Distributor.

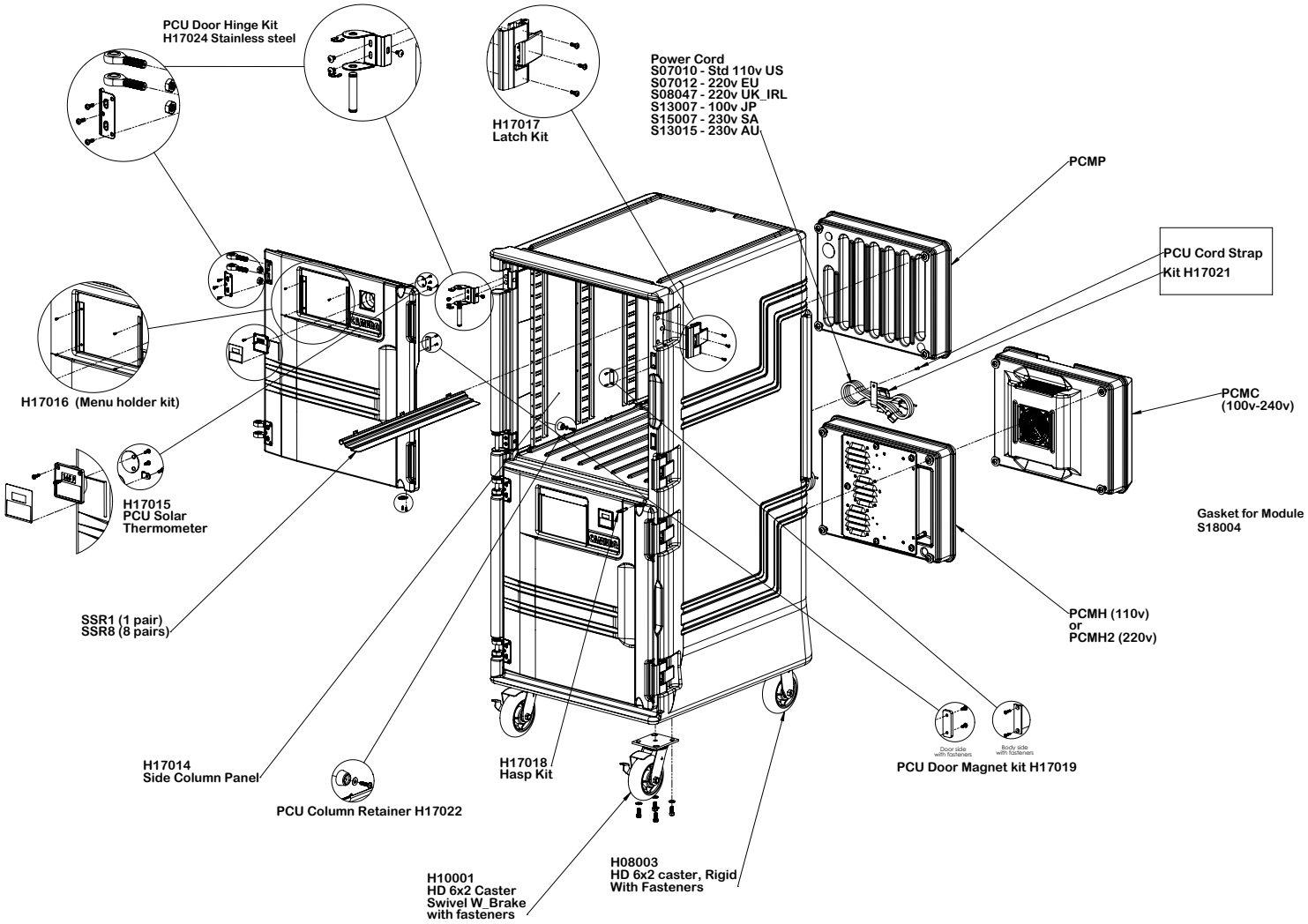

LIMITED ORIGINAL COMMERCIAL ELECTRICAL EQUIPMENT WARRANTY

Cambro Manufacturing warrants its new product(s) to be free from defects in material and workmanship for a period of one (1) year from the date of shipment from authorized CAMBRO distribution locations.

This Warranty is subject to the following conditions and limitations:

1. This warranty is limited to product(s) sold by Cambro Manufacturing to the original user in the continental United States and Canada. For International Warranty Claims contact your local Cambro Representative.
2. The Liability of Cambro Manufacturing is limited to the repair or replacement of any part found to be defective. Parts and labor required for preventative maintenance or cleaning are not covered under this warranty.
3. Cambro Manufacturing will bear normal charges incurred in the repair or replacement of a warranted piece of equipment within 50 miles (80 kilometers) of an authorized service agency. Time and travel charges in excess of 50 miles (80 kilometers) will be the responsibility of the person or firm requesting the service. All labor to repair and/or service the warranted unit(s) shall be performed during regular working hours. Overtime premium will be charged to the buyer and is NOT covered by this warranty.
4. Charges incurred by delays or operating restrictions that hinder the service technician's ability to access or perform service to equipment in question are NOT covered by this warranty. This includes Institutional, Correctional, Military, and marine facilities.
5. Cambro Manufacturing will bear no responsibility or liability for any product(s) which have been mishandled, abused, misapplied, misused, subjected to harsh chemical action, damaged by flood, fire, or other acts of nature, field modified by unauthorized personnel or which have altered or missing serial numbers.
6. Cambro Manufacturing does not recommend or authorize the use of any product(s) in a non-commercial application, including but not limited to residential use. The use or installation of any product(s) in non-commercial applications renders all warranties, express or implied, including the warranties of MERCHANTABILITY and FITNESS FOR A PARTICULAR PURPOSE, null and void, including any responsibility for damage, costs and legal actions resulting from use or installation of product(s) in any noncommercial setting.
7. Adjustments such as calibrations, leveling, tightening of fasteners or utility connections normally associated with the original installation are the responsibility of the dealer or installer and not that of Cambro Manufacturing. Improper installation includes, but is not limited to, use of inadequate electrical wiring and/or insufficient or improper voltage.
8. Replacement part(s) which are replaced in the field by CAMBRO authorized service technicians ONLY will be warranted for the duration of the equipment warranty or 90 days effective from date of installation, whichever is greater. This warranty is for part(s) cost only and does not include freight or labor charges.
9. This states the exclusive remedy against Cambro Manufacturing relating to the product(s), whether in contract or in tort or under any other legal theory, and whether arising out of warranties, representations, instructions, installations or defects from any cause. Cambro Manufacturing shall not be liable, under any legal theory, for loss of use, revenue or profit, or for substitute use of or performance, or for incidental, indirect, or special or consequential damages or for any other loss or cost of a similar type.
10. THIS WARRANTY AND THE REPRESENTATIONS AND TERMS SET FORTH HEREIN ARE EXCLUSIVE AND IN LIEU OF ALL OTHER WARRANTIES AND LIABILITIES, INCLUDING BUT NOT LIMITED TO, OTHER WARRANTIES, EXPRESS OR IMPLIED, OF MERCHANTABILITY AND FITNESS FOR PARTICULAR USE AND CONSTITUTES THE ONLY WARRANTY OF CAMBRO MANUFACTURING WITH RESPECT TO THE PRODUCT(S).

RETURN POLICY: Cambro Manufacturing products cannot be returned without prior written factory authorization **(RMA).** The restocking charge is 15% plus any costs required to recondition the equipment. No returns accepted after 90 days from date of invoice. Electrical components returned are subject to inspection prior to credit being issued. Electrical components which have been installed by an operator or non-approved service agent are not returnable for credit.

Telephone 714 848 1555 **Toll Free** 800 854 7631 **Customer Service** 800 833 3003

© Cambro Manufacturing Company 5801 Skylab Road, Huntington Beach, California 92647-2056

Printed in USA 04/19

UMPCU REV D

D031914