INTRODUCTION

Thank you for purchasing a Honda powerhead. We want to help you to get the best results from your new powerhead and to operate it safely. This manual contains information on how to do that; please read it carefully before operating the powerhead. If a problem should arise, or if you have any questions about your powerhead, consult an authorized Honda servicing dealer.

All information in this publication is based on the latest product information available at the time of printing. Honda Motor Co., Ltd. reserves the right to make changes at any time without notice and without incurring any obligation. No part of this publication may be reproduced without written permission.

This manual should be considered a permanent part of the powerhead and should remain with the powerhead if resold.

We suggest you read the *Distributor's Limited Warranty (U.S.) /Distributor's Warranty (CA.)* to fully understand its coverage and your responsibilities of ownership. The *Distributor's Limited Warranty (U.S.) / Distributor's Warranty (CA.)* is a separate document that should have been given to you by your dealer.
If not, you can obtain a copy from your dealer or download from:
U.S.A http://powerequipment.honda.com/support/warranty
Canada http://powerequipment.honda.ca/parts-service/warranty

SAFETY MESSAGES

Your safety and the safety of others are very important. We have provided important safety messages in this manual and on the powerhead. Please read these messages carefully.

A safety message alerts you to potential hazards that could hurt you or others. Each safety message is preceded by a safety alert symbol ⚠ and one of three words, DANGER, WARNING, or CAUTION.

These signal words mean:

⚠ DANGER You WILL be KILLED or SERIOUSLY HURT if you don't follow instructions.

⚠ WARNING You CAN be KILLED or SERIOUSLY HURT if you don't follow instructions.

⚠ CAUTION You CAN be HURT if you don't follow instructions.

Each message tells you what the hazard is, what can happen, and what you can do to avoid or reduce injury.

DAMAGE PREVENTION MESSAGES

You will also see other important messages that are preceded by the word NOTICE.

This word means:

NOTICE Your powerhead, other property, or the environment can be damaged if you don't follow instructions.

The purpose of these messages is to help prevent damage to your powerhead, other property, or the environment.

The illustrations in this manual are based on: UMC435
- The illustrations may vary according to the type.

© 2024 Honda Motor Co., Ltd. –All Rights Reserved

UMC425A/C·UMC435A/C

31VP8608
00X31-VP8-6080

HONDA

OWNER'S MANUAL
UMC425·UMC435
POWERHEAD

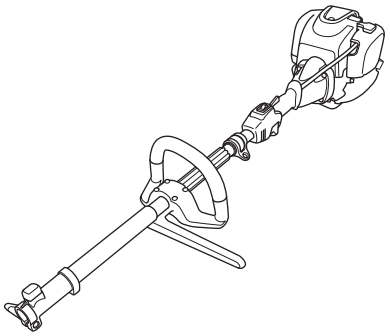

⚠ WARNING: ⚠

The engine exhaust from this product contains chemicals known to the State of California to cause cancer, birth defects or other reproductive harm.

CONTENTS

INTRODUCTION....1
SAFETY MESSAGES....1
SAFETY INFORMATION....2
SAFETY LABEL LOCATION....4
INITIAL POWERHEAD SETUP....4
COMPONENT & CONTROL LOCATIONS....5
POWERHEAD ATTACHMENTS....5
CONTROLS....6
BEFORE OPERATION CHECKS....7
OPERATION....10
- SAFE OPERATING PRECAUTIONS....10
- STARTING THE ENGINE....11
- SETTING ENGINE SPEED....12
- STOPPING THE ENGINE....12

SERVICING YOUR POWERHEAD....12
- THE IMPORTANCE OF MAINTENANCE....12
- MAINTENANCE SAFETY....12
- SAFETY PRECAUTIONS....13
- MAINTENANCE SCHEDULE....13
- REFUELING....14
- ENGINE OIL....14
  - Recommended Oil....14
  - Oil Level Check....14
  - Oil Change....15
- AIR CLEANER....16
  - Inspection....16
  - Cleaning....16
- THROTTLE CABLE....16
  - Check and Adjustment....16
  - Free Play Inspection....16
- SPARK PLUG....17
- COOLING FINS....18
- FUEL FILTER AND FUEL TANK....18
- FUEL TUBE....18
- SPARK ARRESTER (applicable types)....19

HELPFUL TIPS & SUGGESTIONS....20
- STORING YOUR POWERHEAD....20
- TRANSPORTING....21

TAKING CARE OF UNEXPECTED PROBLEMS....22
TECHNICAL & CONSUMER INFORMATION....22
- Serial Number Location....22
- Carburetor Modifications for High Altitude Operation....23
- Emission Control System Information....23
- Emission Control System Warranty....24
- Specifications....25
- Tuneup Specifications....25
- Quick Reference Information....25

CONSUMER INFORMATION....26
- Customer Service Information (For USA and Canada)....26

SAFETY INFORMATION

Operator Responsibility

- Understand the operation of all controls and learn how to stop the engine quickly in case of an emergency. Make sure the operator receives adequate instruction before operating the equipment.
- Do not allow children to operate the powerhead. Keep children and pets away from the area of operation.
- Your powerhead's exhaust contains poisonous carbon monoxide. Do not run the engine without adequate ventilation, and never run the engine indoors.
- The powerhead and exhaust become very hot during operation.
- Only use Honda approved attachments. If not, injury or accident may occur.
- Read and follow the instructions in the owner's manual that came with each attachment.
- Never operate the powerhead when tired, ill, or under the influence of alcohol or other drugs.
- Any part of the machine is a potential source of danger if the machine is used in abnormal conditions or if the maintenance is not performed correctly.
- If you lend or resell your powerhead to a third person, instruct him or her on how to handle the product and alert him or her to read the Owner's Manual carefully before operation.
- Follow the instructions in the owner's manual that comes with each attachment.
- Keep in mind that the operator or user is responsible for any accidents or hazards that may occur to other people or their property.
- While operating the powerhead, always wear protective clothing and protective devices.
- Follow the instructions in the owner's manual that comes with each attachment, regarding required protective clothing and protective devices. For example:
  - Protective clothing
    Wear adequate clothes with long sleeves and long pants.
    Do not wear loose or baggy clothing.
    Arm covers and leg protectors should be worn.
    Do not wear anything around your neck (for example necklaces or neckties).
    Tie your hair if it is long.
  - Protective devices
    * Eye protection
      Eye protection should meet the requirements of *ANSI Z87.1*.
      Wear safety glasses or other eye protection to protect your eyes from flying debris.
    * Hard hat
      Wear a hard hat to protect your head from any overhead branches and falling foreign material.
    * Face shield
      Wear a face shield to protect your face from flying debris.
    * Ear hearing protection
      To reduce the risk of hearing loss, hearing protection is required.
    * Gloves
      Wear gloves to protect your hands.
    * Safety boots
      Wear safety boots with a non-slip sole and toe protector to protect your feet from falling objects and flying debris.
      Do not operate the equipment barefoot or wearing open sandals.
    * Leg protectors
      We recommend that you wear the leg protectors to protect your legs.
    * Dust mask
      We recommend that you wear a dust mask to protect yourself from dust and pollen.

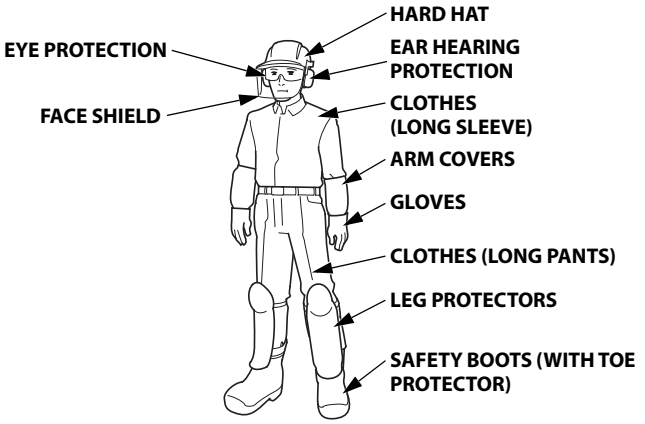

- Before each use, visually inspect the powerhead for any damage and looseness of parts.
- Before each use, look around and underneath the engine for signs of oil or gasoline leaks.
- Avoid operating the powerhead at night, in poor visibility or in bad weather.
- Walk, never run during operation.
- Avoid operating the powerhead on a steep slope.
  The steep slope may be slippery, causing you to fall.
- Do not operate the powerhead with any labels, or any parts removed.
- Do not tamper with the powerhead as it can result in personal injury and/or equipment damage.
- Only use attachments that are designed for your model and application.
- Stop the engine by moving the engine switch to the OFF position in the following cases:
  - Before any operation around the powerhead.
  - Before checking, cleaning or working on the powerhead.
  - After dropping or striking a foreign object. Inspect the powerhead for damage and make repairs before restarting the powerhead.
  - If the powerhead starts to vibrate abnormally. Check immediately the cause of the vibration and perform the necessary repair.
  - Whenever you leave the powerhead unattended.
  - Before refueling.
  - When any person or pet is approaching.
  - Shut off the engine immediately when the powerhead shows abnormal vibration suddenly. Sudden vibration can suggest the damaged rotating parts or loose fasteners. Examine the cause of the problem, and do not start the engine before a repair is made.
- The attachment should not be moving when the engine is at idle. If this happens, contact your authorized Honda dealer. This idle speed will need to be adjusted. Make sure the cutting attachment has stopped before the unit is set down.
- Keep all nuts, bolts and screws tight to be sure the powerhead is in a safe working condition. Regular maintenance is essential to user's safety and product performance.
- Do not use the powerhead with worn or damaged parts. Parts must be replaced, or repaired. Replace worn or damaged parts with Honda genuine parts. Non equivalent quality parts may damage the machine and be prejudicial to your safety.

- Injury caused by vibration and cold:
  You may feel the prickling or burning pain in your fingers, and the fingers may lose color and feeling. It is believed that these symptoms are brought by vibration and/or exposure to cold. The specific trigger point of these symptoms are not identified yet, but observe the following instructions.
  * Limit the amount of time you spend operating the powerhead in a day.
  * Keep your body warm, especially your hands, wrists and arms.
  * Take your breaks at short intervals. Do not smoke while working.
  * When you feel discomfort, redness and swelling of the fingers followed by whitening and loss of feeling, consult your doctor promptly.
- Injury caused by repeated operation:
  Performing the repeated operation for a prolonged time may cause injury. Observe the following instructions to reduce the causes of the injury.
  * Avoid repeated operation by using your wrist(s) in bent, stretched or twisted position.
  * Take your breaks regularly to minimize the effect of repeated operation. Take your time when performing repeated operation. Do not rush to operate the powerhead.
  * When your fingers, hands, wrists and/or arms are throbbing or numbed, consult your doctor.

Child Safety

- Keep children indoors and supervised at all times when any outdoor powerhead is being used nearby.
- Never assume children will remain where you last saw them. Be alert and turn the powerhead off if children enter the area.
- Children should never be allowed to operate the powerhead, even under adult supervision.

Fire and Burn Hazard

Gasoline is extremely flammable, and gasoline vapor can explode.
Use extreme care when handling gasoline. Keep gasoline out of reach of children.
- Store fuel in containers specifically designed for this purpose.
- Refuel outdoors only, and do not smoke while refueling or handling fuel.
- Add fuel before starting the engine. Never remove the cap of the fuel tank or add gasoline while the engine is running or when the engine is hot.
- If gasoline is spilled, do not attempt to start the engine but move the powerhead away from the area of spillage and avoid creating any source of ignition until gasoline vapors have dissipated.
- Tighten the fuel tank and container cap securely.
- When you start the engine after refueling, be sure to start the engine at least 10 feet (3 meter) away from the refueling spot.
- Never store the powerhead with gasoline in the tank inside a building where fumes may reach an open flame, spark or high temperature source.
- Allow the engine to cool before storing in any enclosure.
- To reduce a fire hazard, keep the powerhead, especially the engine, muffler, and gasoline storage area, free of grass, leaves, or excessive grease.
- If the fuel tank has to be drained, this should be done outdoors, with a cold engine.
- Do not overfill the fuel tank.
- Make sure that any spilled fuel has been wiped up and cleaned before starting the engine.
- Never smoke near gasoline.

Carbon Monoxide Hazard

Your powerhead's exhaust contains poisonous carbon monoxide gas, which you cannot see or smell. Breathing carbon monoxide can KILL YOU IN MINUTES.
For your safety:
- Do not start or operate the engine in any closed or partially enclosed area, such as a garage.
- Never run the powerhead in a closed or even partially closed area where people or pets may be present.
- Never operate the powerhead near open doors, windows, or vents.
- Get fresh air and seek medical attention immediately if you suspect you have inhaled carbon monoxide.

Early symptoms of carbon monoxide exposure include headache, fatigue, shortness of breath, nausea, and dizziness. Continued exposure to carbon monoxide can cause loss of muscular coordination, loss of consciousness, and then death.

SAFETY LABEL LOCATION

These labels warn you of potential hazards that can cause serious injury. Read them carefully.
If a label comes off or becomes hard to read, contact your servicing dealer for replacement.

⚠ WARNING

Gasoline is highly flammable and explosive.
Turn engine off and let cool before refueling.

The engine emits toxic carbon monoxide.
Do not run in an enclosed area.

Read Owner's Manual before operation.

Canadian model only

⚠ ATTENTION

L'essence est très inflammable et explosive.
Arrêter le moteur et le laisser refroidir avant de faire le plein d'essence.

Le moteur produit les vapeurs nocives de monoxyde de carbone.
Ne pas utiliser dans un local enclos.

Lire le manuel de propriétaire avant l'utilisation.

French labels come with the powerhead.

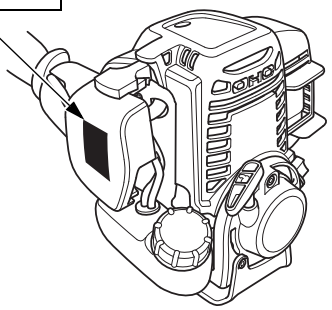

USA model

⚠ WARNING

Operation of This Equipment May Create Sparks That Can Start Fires Around Dry Vegetation. A Spark Arrestor May be Required. The Operator Should Contact Local Fire Agencies For Laws or Regulations Relating to Fire Prevention Requirements.
Per California Public Resources Code 4442.6

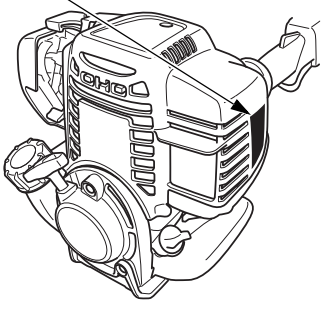

INITIAL POWERHEAD SETUP

Importance of Proper Assembly

Proper assembly is essential to operator safety and the reliability of the machine. Any error or oversight made by the person assembling and servicing a machine can result in faulty operation, damage to the machine, or injury to the operator.

⚠ WARNING

Improper assembly can cause an unsafe condition that can lead to serious injury or death.

Follow the procedures and precautions in the assembly instructions carefully.

List of Loose Parts

Carefully remove the powerhead and loose parts from the carton and compare the loose parts against the following list. Contact the authorized Honda dealer from whom you purchased the powerhead if any of the loose parts shown are not included with your powerhead.

(1)


HONDA
OWNER'S MANUAL
UMC425-UMC435
POWERHEAD

(2)

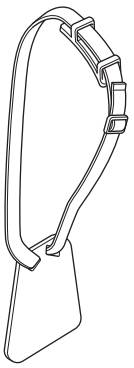

(3)

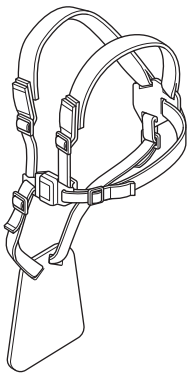

(4)



(5)

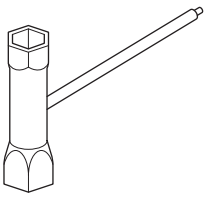

Ref. No.	Description	UMC425	UMC435	Qty.
(1)	Owner's Manual	•	•	1
(2)	Single-strap carrying harness	•		1
(3)	Double-strap carrying harness		•	1
(4)	hex wrench	•	•	1
(5)	Spark plug wrench	•	•	1

Add Engine Oil

The powerhead is shipped WITHOUT OIL in the engine. Place the powerhead on a level surface, and then remove the oil filler cap/dipstick. All Honda engines are run at the factory prior to packaging. Most of the oil is removed prior to shipment; however, some oil remains in the engine. The amount of oil left in the engine varies.

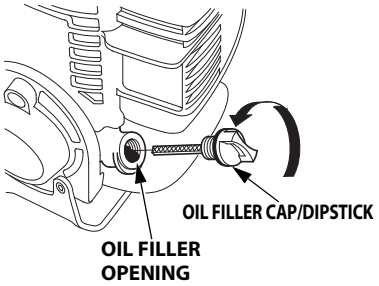

Add enough recommended oil (page 14) to bring the oil level to the lower edge of the oil filler opening. Do not overfill the engine with oil, as the oil tank capacity is small.

NOTICE

Running the engine with too little or too much oil can cause engine damage. This type of damage is not covered under the Distributor's Limited Warranty (U.S.) / Distributor's Warranty (CA.). Screw in the oil filler cap/dipstick securely.

Please Register Your Powerhead

Please take a few minutes and register your purchase with Honda. You can register by completing and mailing the registration card provided with the powerhead or going online to powerequipment.honda.com and clicking on Product Registration.

Before Using Your Powerhead

Before using the powerhead, all operators must read the following sections:

- SAFETY INFORMATION (page 2)
- CONTROLS (page 6)
- BEFORE OPERATION CHECKS (page 7)
- OPERATION (page 10)
- MAINTENANCE SCHEDULE (page 13)

COMPONENT & CONTROL LOCATIONS

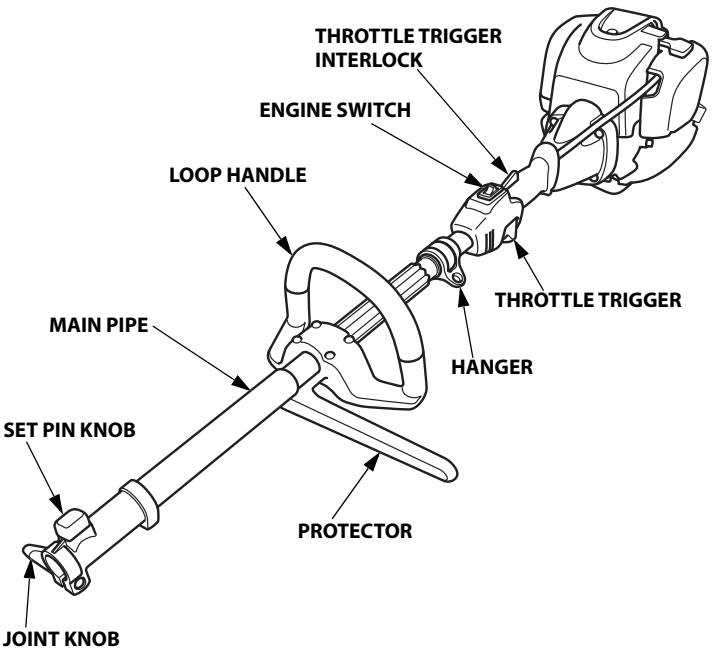

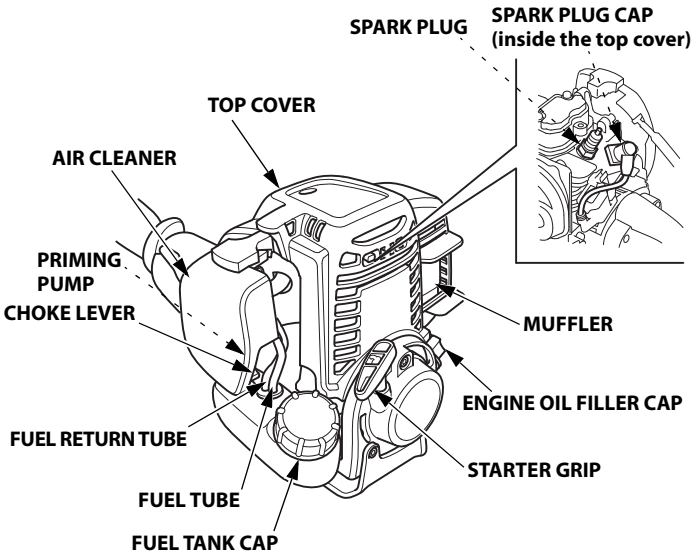

POWERHEAD ATTACHMENTS

The following Honda approved attachments can be used with the powerhead. Consult your servicing dealer.

- Trimmer/Brush Cutter
- Edger

···etc.

CONTROLS

Engine Switch

The engine switch enables and disables the ignition system.
The engine switch must be in the ON position for the engine to run.
Moving the engine switch to the OFF position stops the engine.

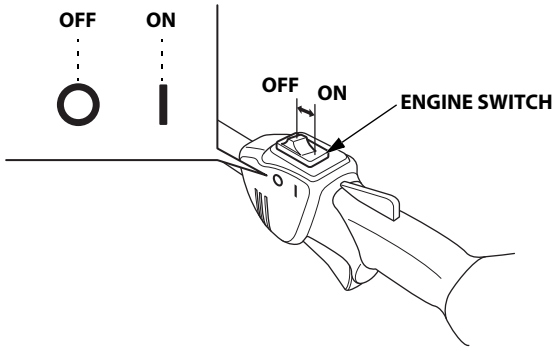

Priming Pump

Pressing the priming pump feeds the gasoline from the fuel tank to the carburetor. This procedure is necessary for starting the engine (see page 11).

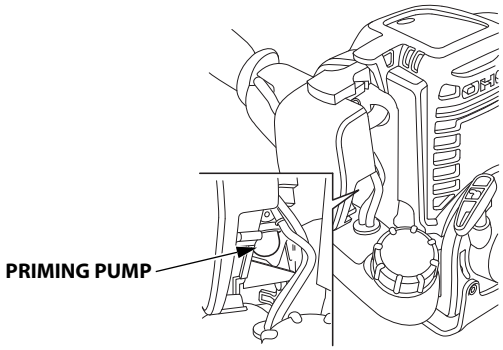

Choke Lever

The choke lever opens and closes the choke valve in the carburetor.
The CLOSED position enriches the fuel mixture for starting a cold engine.
The OPEN position provides the correct fuel mixture for operation after starting, and for restarting a warm engine.

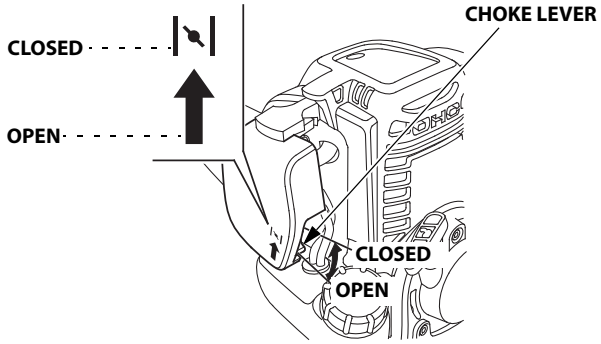

Starter Grip

Pulling the starter grip operates the recoil starter to crank the engine for starting.

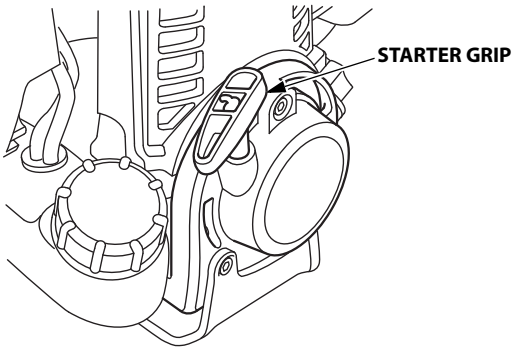

Throttle Trigger

The throttle trigger controls engine speed.
Pulling and releasing the throttle trigger shown below makes the engine run faster or slower.

The throttle trigger interlock must be depressed before the throttle trigger can be activated.

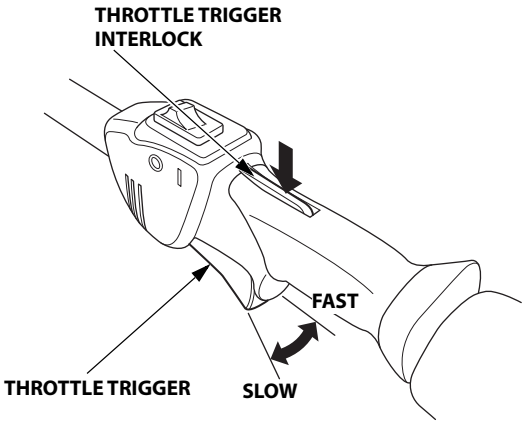

By pulling the throttle trigger gradually, the engine speed increases gradually.
Pull the throttle trigger more to accelerate the engine speed.
By releasing the throttle trigger, the engine speed decreases.

Throttle Trigger Interlock

The throttle trigger interlock makes the throttle trigger operable. The throttle trigger cannot be pulled unless the throttle trigger interlock has been pushed beforehand.

Joint

The joint is to attach a Honda approved attachment to the powerhead. Refer to Pages 8–9 for how to attach and detach the attachments.

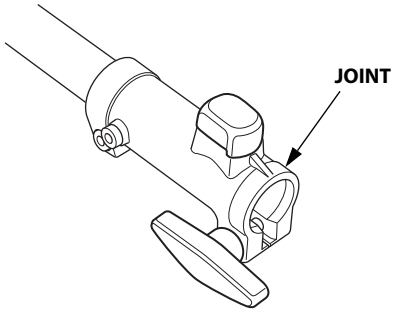

Carrying Harness Quick-Release Latch

The quick-release latch tab is provided to detach the powerhead from your body in an emergency.
Pull up the quick-release latch tab, and the powerhead is detached from the carrying harness.

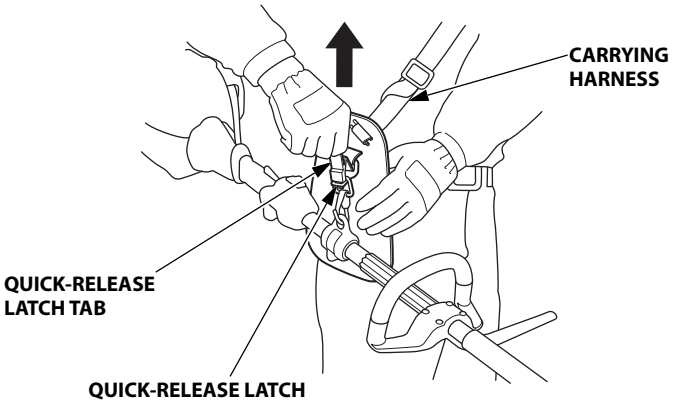

BEFORE OPERATION CHECKS

IS YOUR POWERHEAD READY TO GO?

For your safety, to ensure compliance with environmental regulations, and to maximize the service life of your equipment, it is very important to take a few moments before you operate the powerhead to check its condition. Be sure to take care of any problem you find, or have your servicing dealer correct it, before you operate the powerhead.

⚠ WARNING

Failure to properly maintain this powerhead, or failing to correct a problem before operation, could result in a significant malfunction.

Some malfunctions can cause serious injuries or death.

Always perform a pre-operation inspection before each operation and correct any problems.

Before beginning your pre-operation checks, be sure the powerhead is level and the engine switch is in the OFF position.

Always check the following items before you start the engine:

Check the General Condition of the Powerhead

1. Before each use, look around and underneath the engine for signs of oil or gasoline leaks.
2. Remove any excessive dirt or debris, especially around the muffler and recoil starter.
3. Look for signs of damage.
4. Check that all shields and covers are in place, and all nuts, bolts, and screws are tightened.

Adjustment of the Carrying Harness

⚠ WARNING

Failure to wear the carrying harness while using the powerhead could result in instability.

Injuries may occur due to instability.

Be sure to wear the carrying harness before using the powerhead.

1. Wear the carrying harness so that the hip pad is on the right side of your body.
   - Make sure the harness does not twist.
   - If the carrying harness is for both shoulders, firmly secure the carrying harness latch on the front of your body until it clicks. To unlock the carrying harness latch, pull the harness to the right and to the left while pressing the latch.

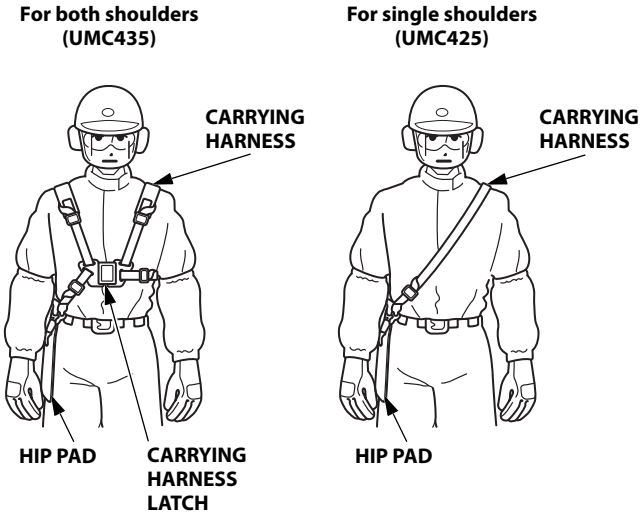

2. Adjust the length of the harness as shown in the figures below.

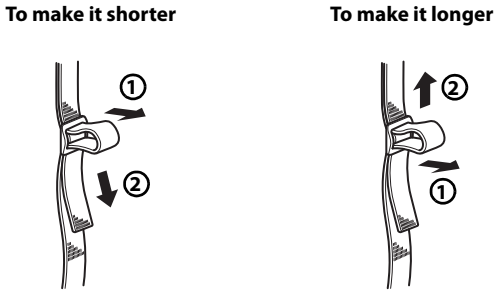

3. Roll the end of the harness toward your body and fasten it.

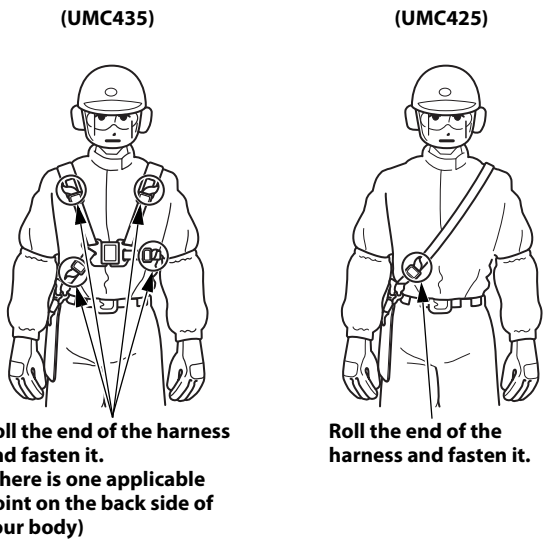

Check the Quick-Release Latch

1. Put on the carrying harness.

2. Check that the latch is released as soon as the quick-release latch tab is pulled upwards while holding the hip pad with your left hand.

3. Insert the latch tongue in the slot of the quick-release latch to reattach the powerhead to the carrying harness.

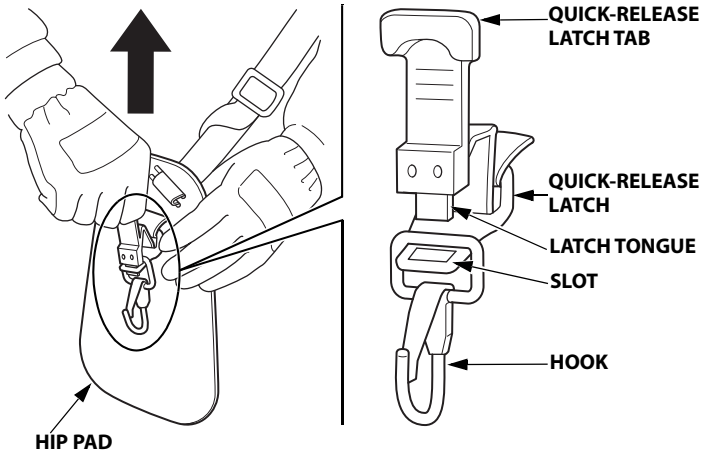

If the latch is not released, have your device inspected and repaired by your servicing dealer.

Attachment Installation/Removal

Check the joint area:

1. Check to see if the set pin knob moves smoothly.

2. Check to see if the joint knob tightens and loosens smoothly, and if there is any damage.

3. Make sure there is no debris in the groove and inside the joint holder.

Installation:

> **⚠ WARNING**
>
> Running this engine without an attachment in place could cause an unsafe condition.
>
> Moving parts could cause severe injury.
>
> Do not run the engine without an attachment properly secured.

1. Turn the set pin knob to the lock position and loosen the joint knob.

2. Align the "▲" mark on the attachment with the joint projection which also aligns the key of the attachment with the joint groove.

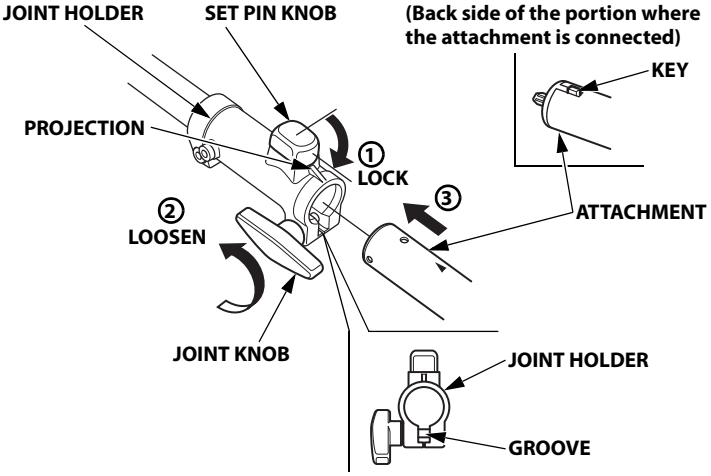

3. Insert the attachment until the set pin knob clicks. Confirm the "▲" mark on the attachment is at the joint holder end.

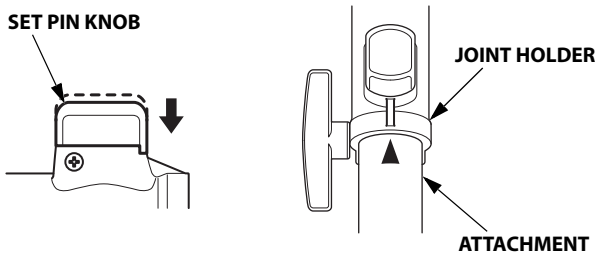

4. Pull the attachment and joint holder to the arrow direction to check that the attachment will not come loose.

5. Tighten the joint knob.

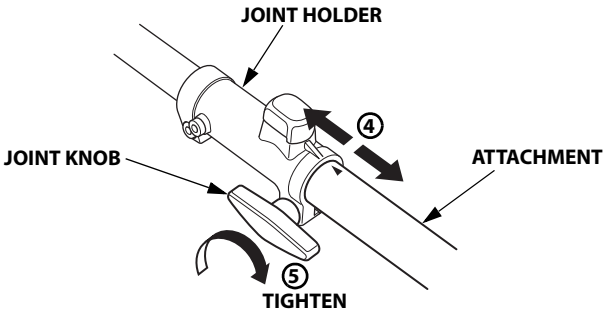

NOTICE

When you place the powerhead with the recoil starter facing down, be careful not to damage the recoil starter. Recoil starter or the engine might get damaged from the impact.

Removal:

⚠ WARNING

Be sure to turn the engine switch to the OFF position. The attachment will continue to move briefly after the engine has stopped or the throttle trigger is released.

A moving attachment can cause injury.

Maintain proper control of the powerhead until the attachment has completely stopped moving.

1. Loosen the joint knob.

2. Pull the set pin knob up and twist 90 degrees to the unlock position.

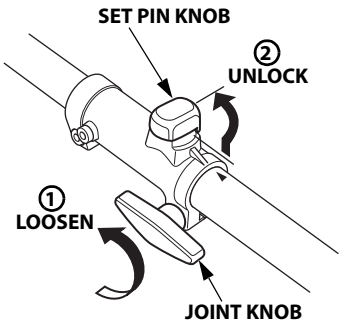

3. Hold the main pipe on the powerhead side and detach the attachment.

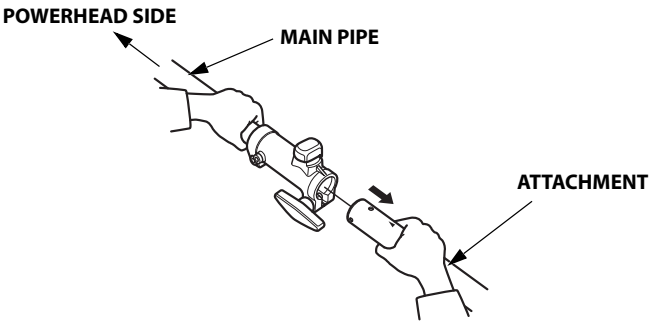

4. Turn the set pin knob to the lock position.

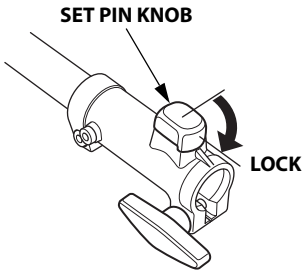

Check the Engine

1. Check the fuel level (see page 14). Starting with a full tank will help to eliminate or reduce operating interruptions for refueling.

2. Check the engine oil level (see page 14). Running the engine with a low oil level can cause engine damage.

3. Check the air filter element (see page 16). A dirty air filter element will restrict air flow to the carburetor, reducing engine and powerhead performance. A damaged air filter element will allow dust to enter and damage the engine.

4. Check the throttle cable free play (see page 16). Operate the throttle system several times and check if it the free play (i.e. throttle lever does not move while operating the throttle trigger).

Check All Bolts and Nuts

1. Check each bolt and nut for looseness. Tighten them securely if necessary.

2. Check the handle for loose mounting bolts, and tighten them securely if necessary.

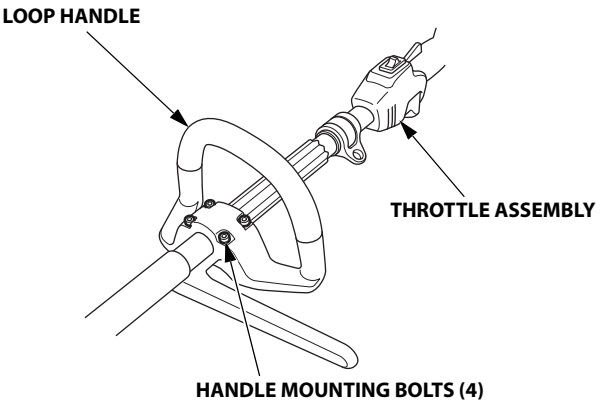

OPERATION

SAFE OPERATING PRECAUTIONS

Before operating the powerhead for the first time, please review the *SAFETY INFORMATION* (see pages 2–3) and the *BEFORE OPERATION CHECKS* (see pages 7–10).

For your safety, do not operate the powerhead in an enclosed area such as a garage. Your powerhead's exhaust contains poisonous carbon monoxide gas that can collect rapidly in an enclosed area and cause illness or death.

⚠ WARNING

Exhaust contains poisonous carbon monoxide gas that can build up to dangerous levels in closed areas.

Breathing carbon monoxide can cause unconsciousness or death.

Never run this product's engine in a closed, or even partly closed area.

Read and understand the safety instructions on pages 7 to 10 before operating the powerhead.

If you notice any abnormal sound, smell, vibration, or other unusual signs, stop the engine immediately and consult your authorized Honda dealer.

With the engine idling, hook the powerhead to your carrying harness and hold the powerhead at the correct position.

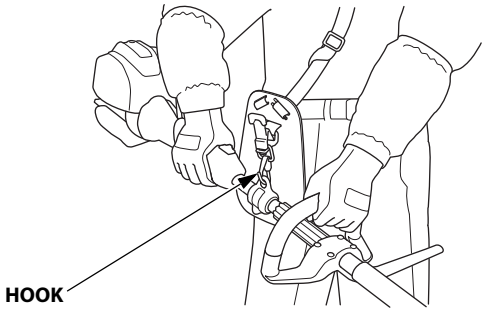

Hold the powerhead firmly with both hands, with your fingers and thumbs encircling the handles as shown. This will help you to keep the powerhead under control at all times.

For how to use the attachment, read and follow the instructions in the owner's manual that came with each attachment.

In an emergency, pull up on the quick-release latch tab to detach the powerhead from the carrying harness.

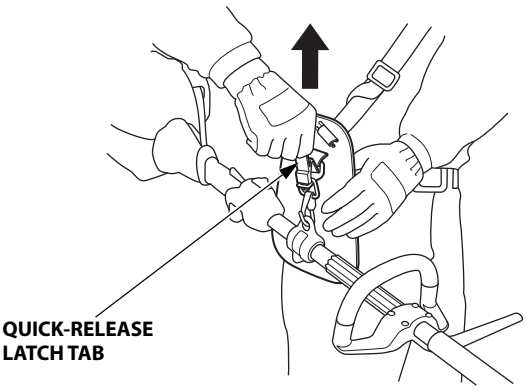

STARTING THE ENGINE

⚠ WARNING

Exhaust contains poisonous carbon monoxide gas that can build up to dangerous levels in closed areas.

Breathing carbon monoxide can cause unconsciousness or death.

Never run this product's engine in a closed, or even partly closed area.

Start the engine in a place away from the people, pets, and surrounding buildings. Be sure there are no obstacles in the working area.

1. Move the engine switch to the ON position.

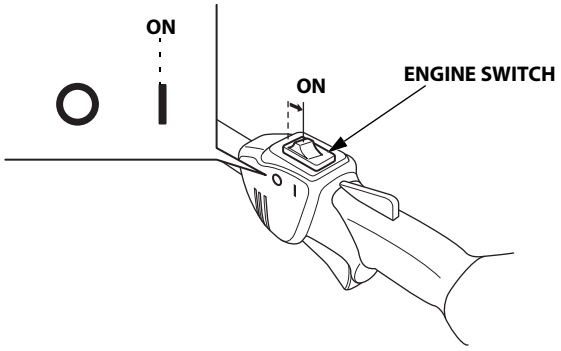

2. To start a cold engine, move the choke lever to the CLOSED position.
   To restart warm engine, leave the choke lever in the OPEN position.

   Do not use the choke if the engine is warm or the air temperature is high.

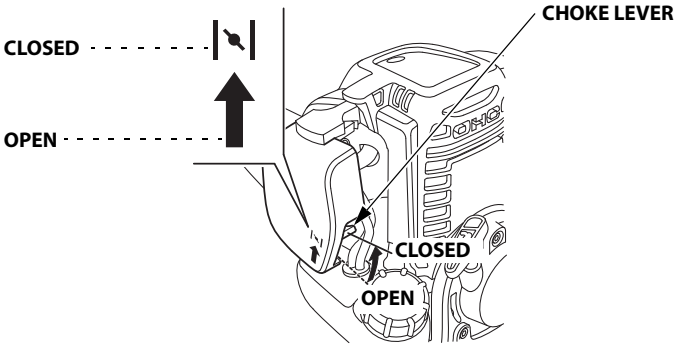

3. To start a cold engine, press the priming pump several times until the priming pump is filled with fuel.
   Even if the priming pump is pressed too many times, the extra fuel will return to the fuel tank.
   If the priming pump is not pressed enough, the engine may not start.

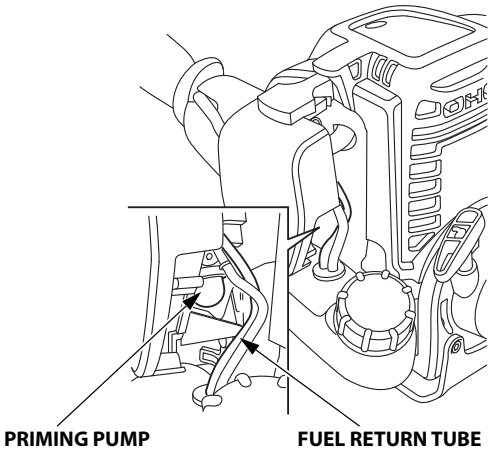

4. Pull the starter grip lightly until you feel resistance while holding the main pipe, then pull briskly in the direction of the arrow as shown below. Return the starter grip gently.

   NOTICE

   Do not allow the starter grip to snap back against the engine. Return it gently to prevent damage to the starter.
   Damage may result if the starter grip is pulled while the engine is running.

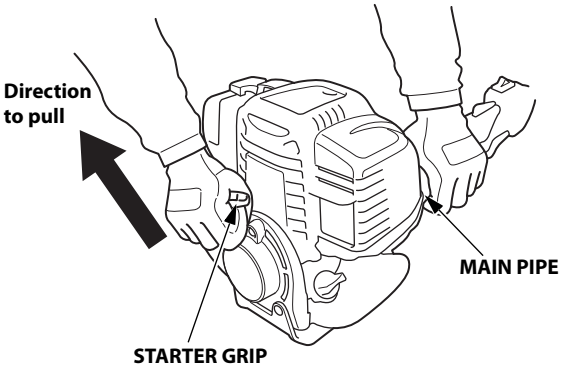

5. If the choke lever has been moved to the CLOSED position to start the engine, gradually move it to the OPEN position as the engine warms up.

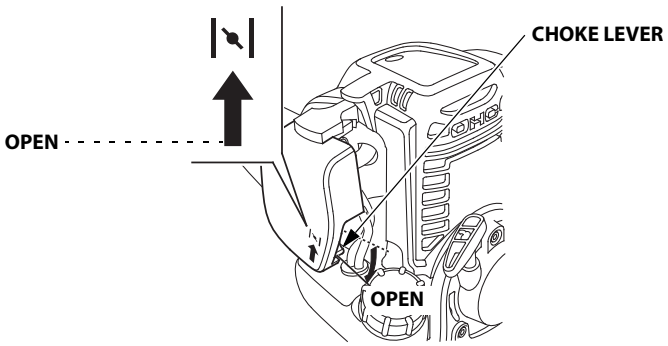

Hot Restart

If the engine is operated at higher ambient temperatures, then turned off and allowed to sit for a short time, it may not restart on the first pull.

If necessary, use the following procedure:

IMPORTANT SAFETY PRECAUTION
Turn the engine switch to the OFF position before performing the following procedure. This will prevent the engine from starting and running at maximum speed when the throttle trigger is in the FAST speed position. If the engine starts with the throttle trigger in the FAST speed position, the equipment can move forward rapidly or the attachment can spin at maximum speed.

1. Turn the engine switch to the OFF position.
2. Move the choke lever to the OPEN position.
3. Hold the throttle trigger in the FAST speed position.
4. Pull the starter grip 3 to 5 times.

Follow the STARTING THE ENGINE procedure on page 11 and start the engine with the choke lever in the OPEN position.

SETTING ENGINE SPEED

Squeeze the throttle trigger for the desired engine speed.

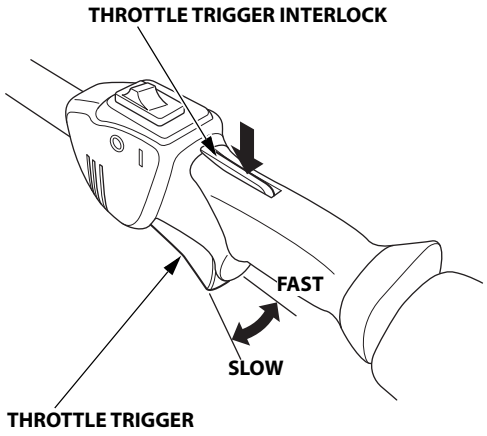

STOPPING THE ENGINE

1. Release the throttle trigger.
2. Move the engine switch to the OFF position.

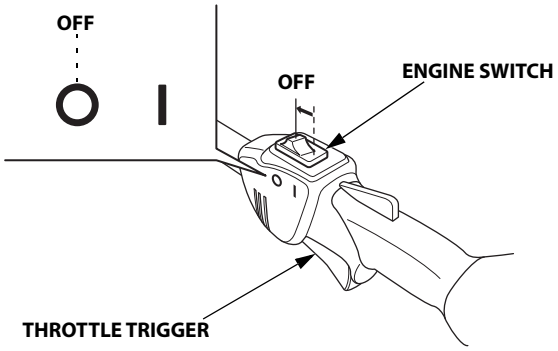

SERVICING YOUR POWERHEAD

THE IMPORTANCE OF MAINTENANCE
Good maintenance is essential for safe, economical and trouble-free operation. It will also help reduce pollution.

⚠ WARNING

Failure to properly maintain this powerhead, or failing to correct a problem before operation, could result in a significant malfunction.

Some malfunctions can cause serious injuries or death.

Always follow the inspection and maintenance recommendations and schedules in this owner's manual.

To help you properly care for your powerhead, the following pages include a maintenance schedule, routine inspection procedures, and simple maintenance procedures using basic hand tools. Other service tasks that are more difficult, or require special tools, are best handled by professionals and are normally performed by a Honda technician or other qualified mechanic.

The maintenance schedule applies to normal operating conditions. If you operate your powerhead under severe conditions, such as sustained high-load or high-temperature operation, or use in unusually wet or dusty conditions, consult your Honda servicing dealer for recommendations applicable to your individual needs and use.

Maintenance, replacement, or repair of the emission control devices and systems may be performed by any powerhead repair establishment or individual, using parts that are "certified" to EPA standards.

MAINTENANCE SAFETY
Some of the most important safety precautions follow. However, we cannot warn you of every conceivable hazard that can arise in performing maintenance. Only you can decide whether or not you should perform a given task.

⚠ WARNING

Improper maintenance can cause an unsafe condition.

Failure to properly follow maintenance instructions and precautions can cause serious injuries or death.

Always follow the procedures and precautions in this owner's manual.

SAFETY PRECAUTIONS

- Make sure the powerhead is off before you begin any maintenance or repairs. To prevent unintentional startup, disconnect the spark plug cap. This will eliminate several potential hazards:
  - **Carbon monoxide poisoning from engine exhaust.** Operate outside, away from open windows or doors.
  - **Burns from hot parts.** Let the engine and exhaust system cool before touching.
  - **Injury from moving parts.** Do not run the engine unless instructed to do so.
- Read the instructions before you begin, and make sure you have the tools and skills required.
- To reduce the possibility of fire or explosion, be careful when working around gasoline. Use only a non-flammable solvent, not gasoline, to clean parts. Keep cigarettes, sparks and flames away from all fuel related parts.

Remember that an authorized Honda servicing dealer knows your powerhead best and is fully equipped to maintain and repair it.
To ensure the best quality and reliability, use only new Honda Genuine parts or their equivalents for repair and replacement.

MAINTENANCE SCHEDULE

ITEM / REGULAR SERVICE PERIOD (1) Perform at every indicated month or operating hour interval, whichever comes first.		Each use	First month or 10 hrs.	Every 3 months or 25 hrs.	Every 6 months or 50 hrs.	Every year or 100 hrs.	Every 2 years or 300 hrs.	Refer to Page
Engine oil	Check level	o						14
	Change		o		o			15
Air cleaner	Check	o						16
	Clean			o (3)				16
Spark plug	Check-adjust					o		17
	Replace						o	
Throttle cable	Check	o						16
Throttle trigger	Check	o						17
Engine cooling fins	Check Clean				o			18
Shoulder harness quick-release	Check	o						8
Set pin knob	Check	o						8
Joint knob	Check	o						8
Around the joint holder	Check	o						8
Nuts, bolts, fasteners	Check (Retighten if necessary)	o						10
Spark arrester (applicable types)	Check Clean					o		19
Fuel tank	Clean					o		18
Fuel filter	Clean					o		18
Clutch shoes	Check				o (2)			–
Idle speed	Check-adjust					o (2)		–
Valve clearance	Check-adjust					o (2)		–
Timing belt	Check	After every 300 hrs. (2) (4)						–
Combustion chamber	Clean	Every 300 hrs. (2)						–
Fuel tubes	Check	Every 2 years (Replace if necessary) (2)						–
Oil tube	Check	Every 2 years (Replace if necessary) (2)						–

(1) For professional commercial use, log hours of operation to determine proper maintenance intervals.

(2) These items should be serviced by your servicing dealer, unless you have the proper tools and are mechanically proficient.
Refer to the Honda shop manual for service procedures.

(3) Service more frequently when used in dusty areas.

(4) Check that there is no crack and abnormal wear-out in the belt, and replace if it is abnormal.

Failure to follow this maintenance schedule could result in non-warrantable failures.

REFUELING

Recommended Fuel

This engine is certified to operate on unleaded gasoline with a pump octane rating of 86 or higher.

Refuel in a well ventilated area with the engine stopped. If the engine has been running, allow it to cool first. Never refuel the engine inside a building where gasoline fumes may reach flames or sparks.

You may use unleaded gasoline containing no more than 10% ethanol (E10) or 5% methanol by volume. In addition, methanol must contain cosolvents and corrosion inhibitors. Use of fuels with content of ethanol or methanol greater than shown above may cause starting and/or performance problems. It may also damage metal, rubber, and plastic parts of the fuel system. Engine damage or performance problems that result from using a fuel with percentages of ethanol or methanol greater than shown above are not covered under the Warranty.

If your equipment will be used on an infrequent or intermittent basis, please refer to the "Fuel" section of the "STORING YOUR POWERHEAD" chapter (see page 20) for additional information regarding fuel deterioration.

Never use gasoline that is stale, contaminated, or mixed with oil. Avoid getting dirt or water in the fuel tank.

⚠ WARNING

Gasoline is highly flammable and explosive.

You can be burned or seriously injured when handling fuel.

- Stop the engine and let it cool before handling fuel.
- Keep heat, sparks, and flame away.
- Handle fuel only outdoors.
- Keep away from your vehicle.
- Wipe up spills immediately.

NOTICE

Fuel can damage paint and some types of plastic. Be careful not to spill fuel when filling your fuel tank. Damage caused by spilled fuel is not covered under the Distributor's Limited Warranty (U.S.) / Distributor's Warranty (CA.).

1. Check the fuel level by looking through the translucent fuel tank.

2. If the fuel level is low, refuel in a well-ventilated area with the engine stopped. If the engine has been running, allow it to cool.

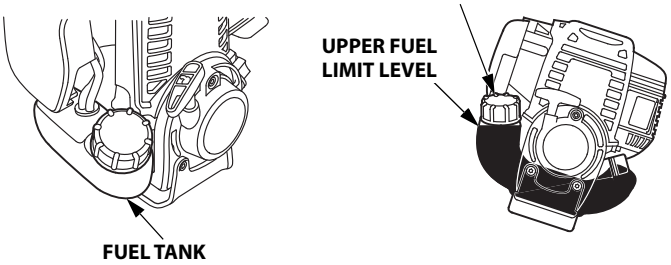

To refuel, rest the engine a level surface with the fuel tank cap facing up, as shown. Remove the fuel tank cap, and fill the tank with gasoline to the bottom of the filler neck. Refuel carefully to avoid spilling fuel. Do not overfill. There should be no fuel in the filler neck. After refueling, tighten the fuel tank cap securely.

Keep gasoline away from appliance pilot lights, barbecues, electric appliances, power tools, etc.

Spilled fuel is not only a fire hazard, it causes environmental damage. Wipe up spills immediately.

ENGINE OIL

Oil is a major factor affecting performance and service life.
Use 4-stroke automotive detergent oil.

Recommended Oil

Use 4-stroke motor oil that meets or exceeds the requirements for API service classification SJ or later (or equivalent). Always check the API service label on the oil container to be sure it includes the letters SJ or later (or equivalent).

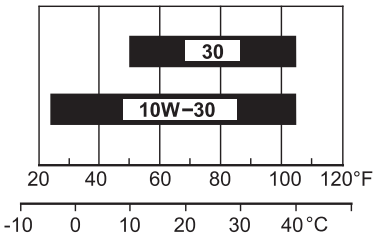

SAE 10W-30 is recommended for general use. Other viscosities shown in the chart may be used when the average temperature in your area is within the indicated range.

Oil Level Check

Check the engine oil level before each use, or every 10 hours if operated continuously.

Check the engine oil level with the engine stopped and in a level position.

1. Remove the engine oil filler cap and wipe it clean.

2. Check the oil level. If it is below the oil filler opening, fill with the recommended oil to the oil filler opening. Do not overfill.

3. Reinstall the engine oil filler cap and tighten securely.

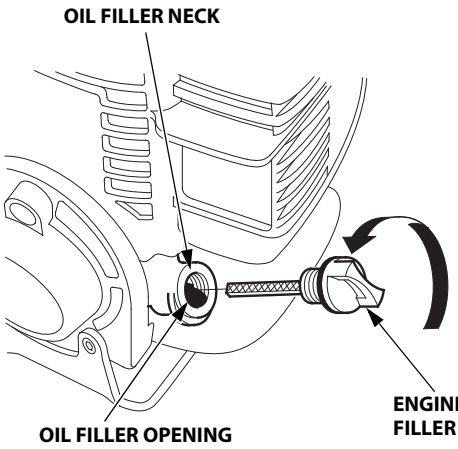

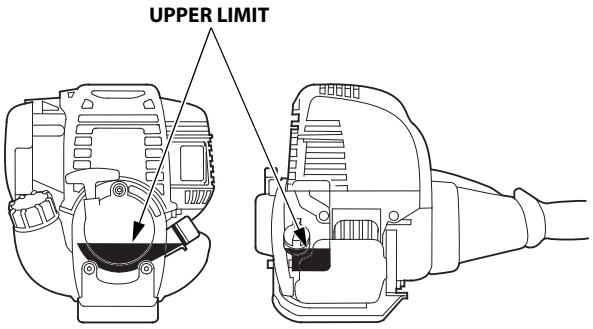

NOTICE

Running the engine with a low oil level can cause engine damage. This type of damage is not covered under the Distributor's Limited Warranty (U.S.) / Distributor's Warranty (CA.).

Oil Change

Drain the used oil when the engine is warm. Warm oil drains quickly and completely.

1. Check that the fuel tank cap is tightened securely.

2. Place a suitable container below the powerhead to catch the used oil.

3. Remove the engine oil filler cap and drain the oil into the container by tipping the powerhead toward the oil filler neck.

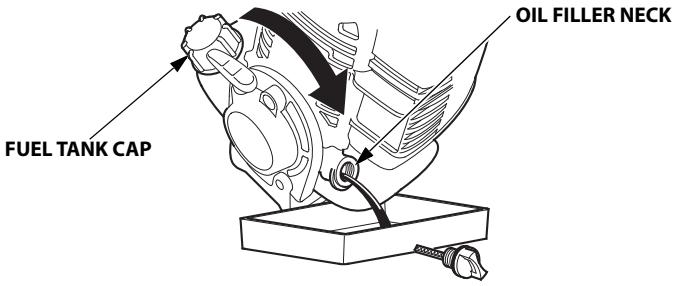

Please dispose of used motor oil in a manner that is compatible with the environment. We suggest you take used oil in a sealed container to your local recycling center or service station for reclamation. Do not throw it in the trash, pour it on the ground, or pour it down a drain.

4. With the powerhead in a level position, fill to the bottom edge of the oil fill hole with the recommended oil (see page 14).

Engine oil capacities
UMC425: 2.7 oz (0.08 L, 2.82 fl Imp oz)
UMC435: 3.3 oz (0.10 L, 3.52 fl Imp oz)

Some oil will remain in the powerhead after draining. When refilling with fresh oil. Slowly add enough oil to fill to the bottom edge of the oil fill hole as shown below. Do not overfill.

NOTICE

Running the engine with a low or excessive oil level can cause engine damage. This type of damage is not covered under the Distributor's Limited Warranty (U.S.) / Distributor's Warranty (CA.).

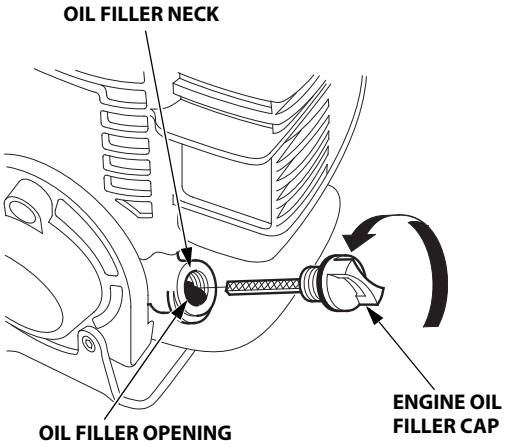

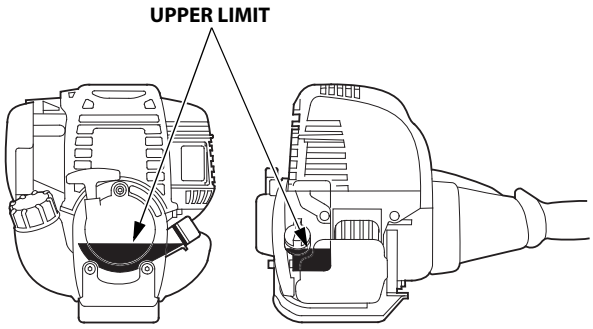

5. Reinstall the engine oil filler cap securely. If any oil is spilled, make sure to wipe it up.

Wash your hands with soap and water after handling used oil.

AIR CLEANER

A dirty air cleaner will restrict air flow to the carburetor, reducing engine performance. If you operate the powerhead in very dusty areas, clean the air filter element more often than specified in the MAINTENANCE SCHEDULE.

NOTICE

Operating the engine without an air filter element, or with a damaged air filter element, will allow dirt to enter the engine, causing rapid engine wear. This type of damage is not covered under the Distributor's Limited Warranty (U.S.) / Distributor's Warranty (CA.).

Inspection

1. Move the choke lever to the CLOSED (upwards) position.
2. Remove the air cleaner cover by unhooking the upper tab on the top of the air cleaner cover and its two lower tabs.
3. Check the air cleaner element for deterioration, damage, dirt or obstruction. Clean the air cleaner element, if it is dirty or replace it if it is damaged.
4. Reinstall the air cleaner element. Make sure it is properly positioned and seated against the air cleaner case.
5. Reinstall the air cleaner cover by inserting the lower tabs, then insert the upper tab.

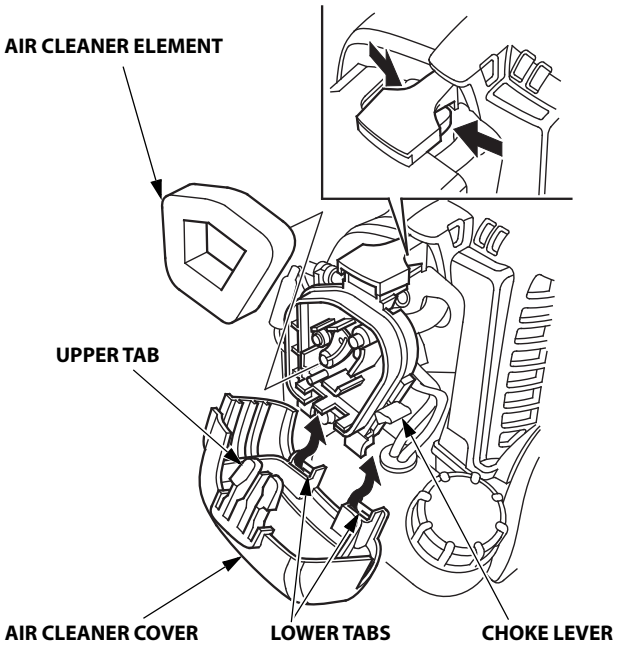

Cleaning

1. Clean in warm soapy water, rinse and allow to dry thoroughly. Or use a high flash point solvent, allow to dry. Dip the element in clean engine oil and squeeze out all the excess.
   The engine will smoke during initial startup if too much oil is left in the foam.

   NOTICE

   Do not install a dry air filter without any oil applied. Doing so will allow dust to enter the engine, resulting in rapid engine wear, which is not covered under the Distributor's Limited Warranty (U.S.) / Distributor's Warranty (CA.).

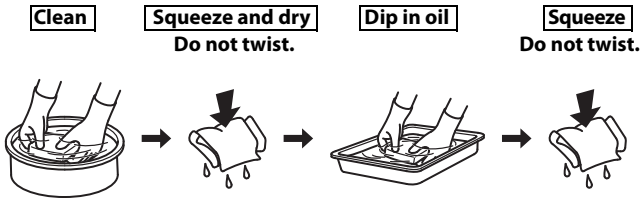

2. Reinstall the air cleaner element.
3. Reinstall the air cleaner cover by inserting the lower tabs, then insert the upper tab.

THROTTLE CABLE

Check and Adjustment

Adjust the throttle cable free play properly.

Free Play Inspection

1. Move the choke lever to the CLOSED (upwards) position.
2. Remove the air cleaner cover by unhooking the upper tab on the top of the air cleaner cover and its two lower tabs.

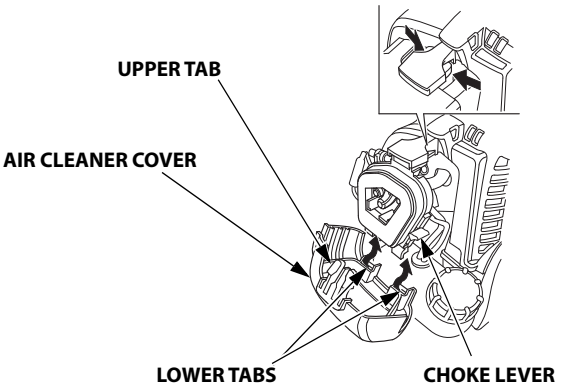

3. Pull out the throttle cable lightly and turn the adjusting nut to adjust the extended length of the throttle cable at the end of the cable to 0.02–0.10 in (0.5–2.5 mm). (Take care not to damage the throttle cable.)

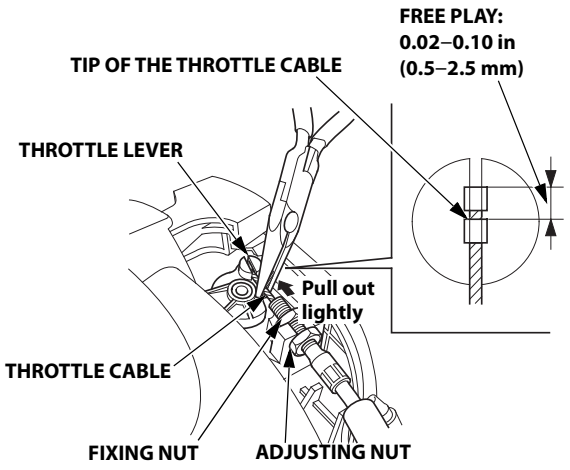

4. Tighten the throttle cable fixing nut securely.

5. Operate the throttle system several times and check if it has free play (i.e. throttle trigger does not move while operating the throttle trigger interlock).

   After adjustment, check the throttle trigger for smooth operation. Consult your authorized Honda dealer if necessary.

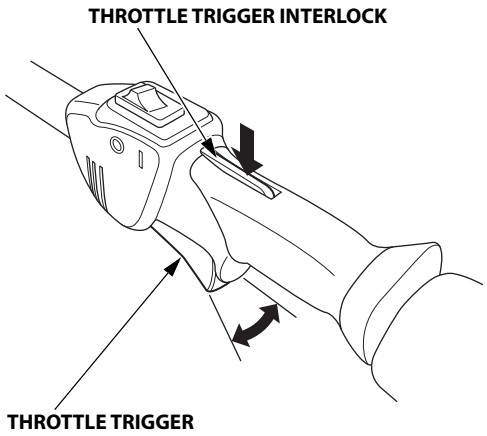

6. Reinstall the air cleaner cover by inserting the lower tabs, then insert the upper tab.

SPARK PLUG

Recommended Spark Plug: CMR5H (NGK)

The recommended spark plug has the correct heat range for normal engine operating temperatures.

NOTICE

An incorrect spark plug can cause engine damage.

For good performance, the spark plug must be properly gapped and free of deposits.

⚠ WARNING

Do not operate the engine when the top cover is removed.

Do not pull the recoil starter handle when the top cover is removed.

You may be injured from the rotating parts or burned by the muffler or other engine components.

1. Loosen the socket bolt with a hexagon wrench, then remove the top cover.

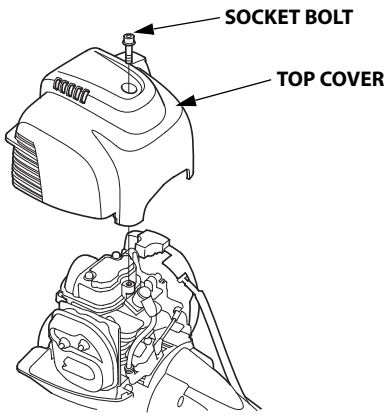

2. Disconnect the spark plug cap, and remove any dirt from around the spark plug area.

3. Remove the spark plug with a 5/8-inch spark plug wrench.

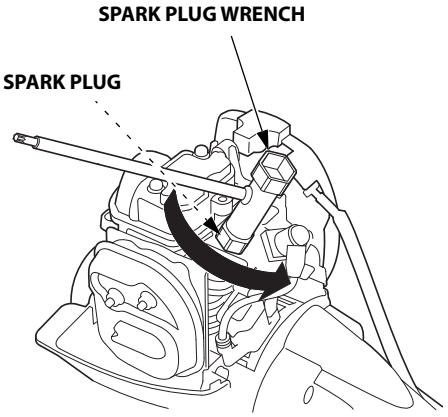

4. Inspect the spark plug.
   Replace it if damaged or badly fouled, if the sealing washer is in poor condition, or if the electrode is worn.

5. Measure the spark plug electrode gap with a wire-type feeler gauge. Correct the gap, if necessary, by carefully bending the side electrode.
   The gap should be:
   0.024–0.028 in (0.6–0.7 mm)

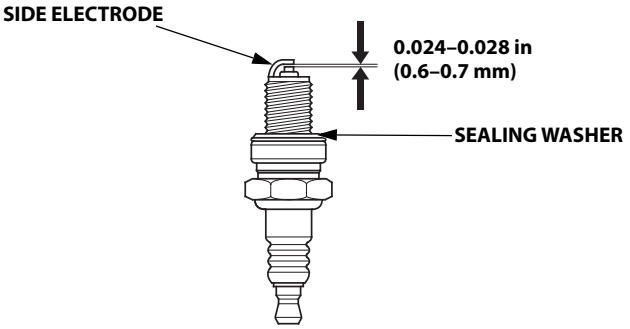

6. Install the spark plug carefully, by hand, to avoid cross-threading.

7. After the spark plug is seated, tighten with a 5/8-inch spark plug wrench to compress the sealing washer.

   When installing a new spark plug, tighten 1/2 turn after the spark plug seats to compress the washer.

   When reinstalling the original spark plug, tighten 1/8–1/4 turn after the spark plug seats to compress the washer.

   NOTICE

   A loose spark plug can overheat and damage the engine. Overtightening the spark plug can damage the threads in the cylinder head.

   TORQUE: 11.8 Nm (1.2 kgf·m, 8.7 lbf·ft)

8. Attach the spark plug cap to the spark plug.

9. Install the top cover, and tighten the socket bolt securely with a hexagon wrench.

COOLING FINS

Inspection

1. Loosen the socket bolt, then remove the top cover.
2. Inspect the engine cooling fins, and clean out debris if necessary.

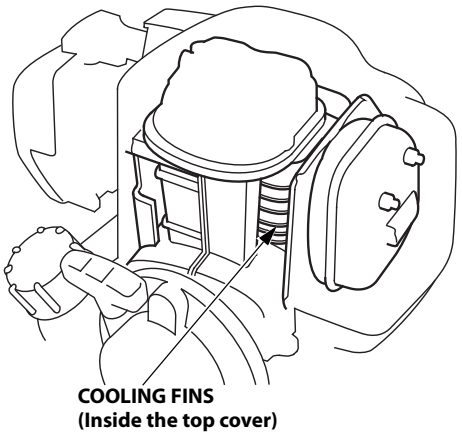

3. Install the top cover, and tighten the socket bolt securely.

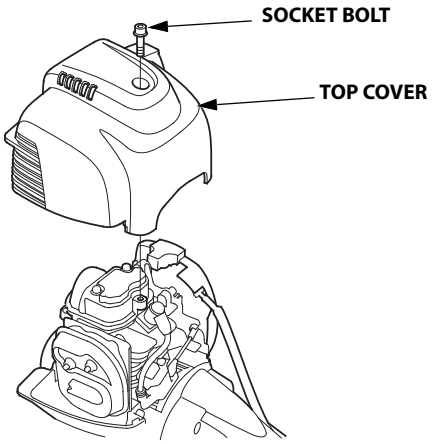

FUEL FILTER AND FUEL TANK

Fuel filter inspection and Fuel tank cleaning

> **⚠ WARNING**
>
> Gasoline is highly flammable and explosive.
>
> You can be burned or seriously injured when handling fuel.
>
> - Stop the engine and let it cool before handling fuel.
> - Keep heat, sparks, and flame away.
> - Handle fuel only outdoors.
> - Keep away from your vehicle.
> - Wipe up spills immediately.

1. Check that the engine oil filler cap is tightened securely.
2. Remove the fuel tank cap, and drain the fuel into an approved gasoline container by tipping the powerhead toward the fuel filler neck.

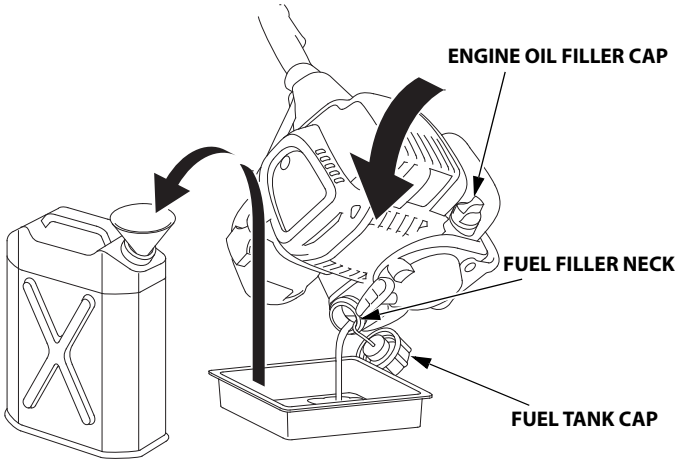

3. Pull out the fuel filter with the mechanic's wire from the fuel filler neck gently.
4. Inspect the fuel filter. If the fuel filter is dirty, wash it gently with non-flammable or high flash point solvent. If the fuel filter is excessively dirty, replace it.

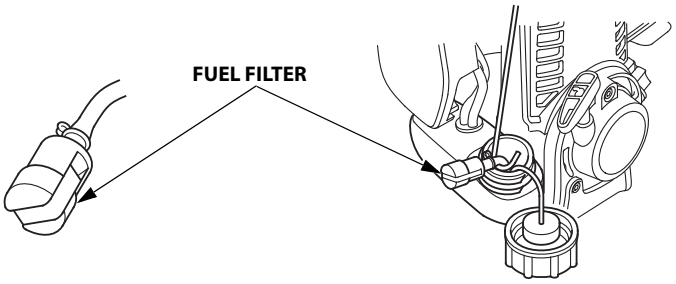

5. Remove water and dirt from the fuel tank by rinsing the inside of the fuel tank with non-flammable or high flash point solvent.
6. Insert the fuel filter into the fuel tank and tighten the fuel tank cap securely.

FUEL TUBE

Inspection

Check fuel tubes for cracks and any other deterioration and confirm that there is no leakage of fuel on the fuel tubes. If you notice any abnormal symptoms on the fuel tubes, contact your servicing dealer.

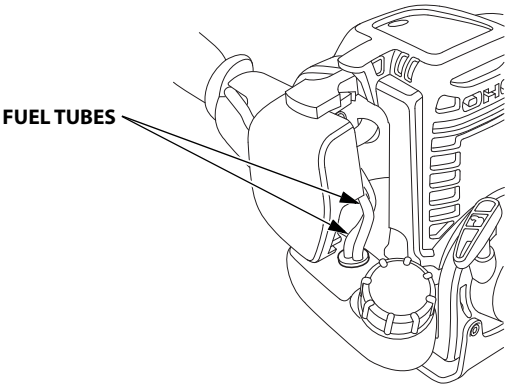

SPARK ARRESTER (applicable types)

The spark arrester must be serviced every 100 hours to keep it functioning as designed.

If the engine has been running, the muffler will be hot. Allow it to cool before servicing the spark arrester.

Spark Arrester Removal

1. Loosen the socket bolt, then remove the top cover.

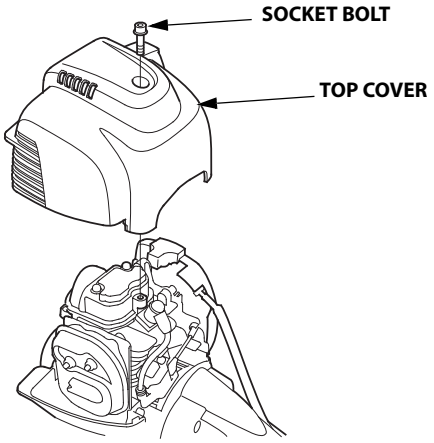

2. Remove the 4×6 mm self-tapping screws from the spark arrester, and remove the spark arrester and exhaust filter (UMC435 only) from the muffler.

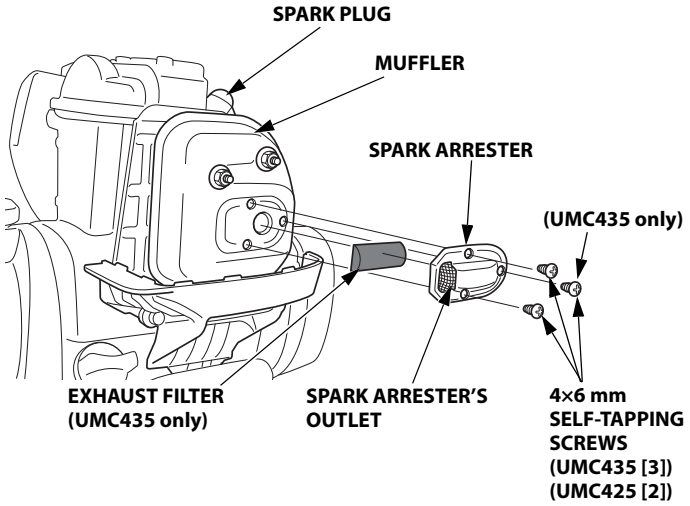

Exhaust Filter Cleaning & Inspection (UMC435 only)

Pinch the exhaust filter, and strike it lightly with a finger, to remove carbon deposits. Be careful not to strike it too hard. The exhaust filter must be free of breaks and holes. If it is damaged or fouled excessively, replaced it.

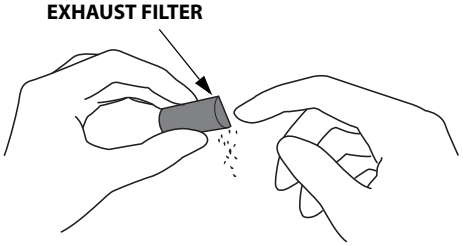

Spark Arrester Cleaning & Inspection

1. Use a brush to remove carbon deposits from the spark arrester screen. Be careful to avoid damaging the screen.

   The spark arrester must be free of breaks and holes. Replace the spark arrester if it is damaged.

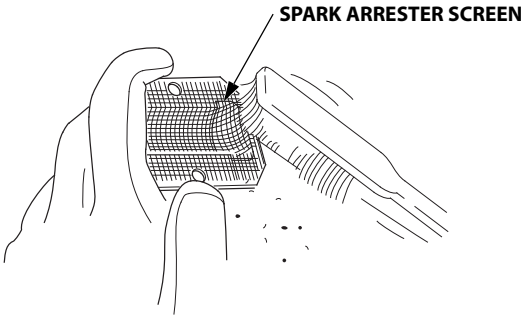

2. Install the exhaust filter (UMC435 only) and spark arrester in the reverse order of disassembly.

   When you install the spark arrester, the spark arrester's outlet must point the opposite side of the spark plug.

3. Install the top cover, and tighten the socket bolt securely.

HELPFUL TIPS & SUGGESTIONS

STORING YOUR POWERHEAD

Storage Preparation

Proper storage preparation is essential for keeping your powerhead trouble-free and looking good. The following steps will help to keep rust and corrosion from impairing your powerhead's function and appearance, and will make the engine easier to start when you use it again.

Cleaning

If the engine has been running, allow it to cool for at least half an hour before cleaning. Clean all exterior surfaces, touch up any damaged paint, and coat other areas that may rust with a light film of oil.

NOTICE

Using a garden hose or pressure washing equipment can force water into the air cleaner or muffler opening. Water in the air cleaner will soak the air filter, and water that passes through the air filter or muffler can enter the cylinder, causing damage.

Fuel

NOTICE

Depending on the region where you operate your equipment, fuel formulations may deteriorate and oxidize rapidly. Fuel deterioration and oxidation can occur in as little as 30 days and may cause damage to the carburetor and/or fuel system. Please check with your servicing dealer for local storage recommendations.

Gasoline will oxidize and deteriorate in storage. Deteriorated gasoline will cause hard starting, and it leaves gum deposits that clog the fuel system. If the gasoline in your powerhead deteriorates during storage, you may need to have the carburetor and other fuel system components serviced or replaced.
The length of time that gasoline can be left in your fuel tank and carburetor without causing functional problems will vary with such factors as gasoline blend, your storage temperatures, and whether the fuel tank is partially or completely filled. The air in a partially filled fuel tank promotes fuel deterioration. Very warm storage temperatures accelerate fuel deterioration. Fuel deterioration problems may occur within a few months, or even less if the gasoline was not fresh when you filled the fuel tank.

Fuel system damage or engine performance problems resulting from neglected storage preparation are not covered under the *Distributor's Limited Warranty (U.S.) / Distributor's Warranty (CA.)*.

You can extend fuel storage life by adding a gasoline stabilizer that is formulated for that purpose, or you can avoid fuel deterioration problems by draining the fuel tank and carburetor.

Short Term Storage (30–90 days)

Adding a Gasoline Stabilizer to Extend Fuel Storage Life

When adding a gasoline stabilizer, fill the fuel tank with fresh gasoline. If only partially filled, air in the tank will promote fuel deterioration during storage. If you keep a container of gasoline for refueling, be sure that it contains only fresh gasoline.

1. Add gasoline stabilizer following the manufacturer's instructions.
2. After adding a gasoline stabilizer, run the engine outdoors for 10 minutes to be sure that treated gasoline has replaced the untreated gasoline in the carburetor.
3. Stop the engine.

Long Term or Seasonal Storage (greater than 90 days)

Draining the Fuel Tank and Carburetor

⚠ WARNING

Gasoline is highly flammable and explosive.

You can be burned or seriously injured when handling fuel.

- Stop the engine and let it cool before handling fuel.
- Keep heat, sparks, and flame away.
- Handle fuel only outdoors.
- Keep away from your vehicle.
- Wipe up spills immediately.

1. Make sure the engine oil filler cap is tightened securely.
2. Remove the fuel tank cap and drain the fuel into an approved gasoline container by tipping the powerhead toward the fuel filler neck.

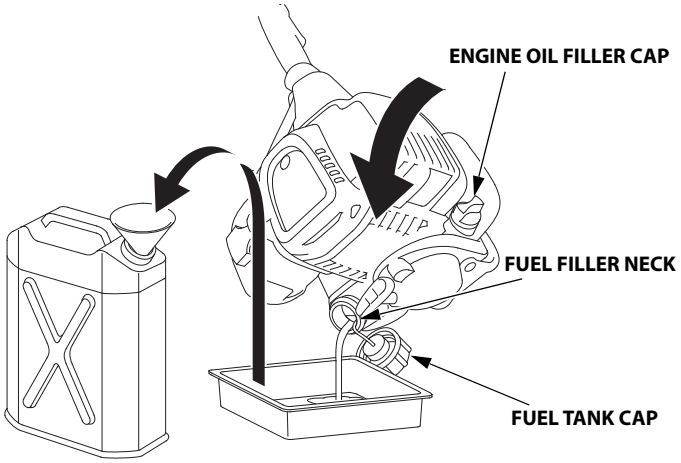

3. Press the priming pump several times until all fuel has returned to the fuel tank.

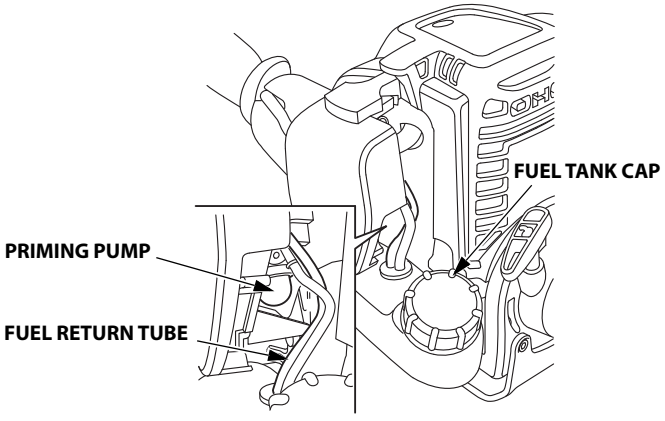

4. Tip the powerhead toward the fuel filler neck again to drain the fuel.
5. After all fuel has drained, reinstall the fuel tank cap securely.

Engine Oil

1. Change the engine oil (see page 15).
2. Clean the air cleaner (see page 16).
3. Loosen the socket bolt, then remove the top cover (see page 17).
4. Remove the spark plug (see page 17).
5. Apply a couple of drops of clean engine oil into the cylinder.
6. Install the top cover temporarily.
7. Pull the starter grip several times to distribute the oil in the cylinder.
8. Remove the top cover, then reinstall the spark plug.
9. Install the top cover, and tighten the socket bolt securely.
10. Pull the starter grip slowly until resistance is felt.
11. Move the choke lever to the CLOSED position (see page 6).
12. Cover the powerhead and store in a dry, dust-free area.

Storage Precautions

If your powerhead will be stored with gasoline in the fuel tank and carburetor, it is important to reduce the hazard of gasoline vapor ignition. Select a well ventilated storage area away from any appliance that operates with a flame, such as a furnace, water heater, or clothes dryer. Also avoid any area with a spark-producing electric motor, or where power tools are operated.

If possible, avoid storage areas with high humidity, because that promotes rust and corrosion.

Keep the powerhead level in storage. Tilting can cause fuel or oil leakage.

With the engine and exhaust system cool, cover the powerhead to keep out dust. A hot engine and exhaust system can ignite or melt some materials. Do not use a plastic sheet as a dust cover. A nonporous cover will trap moisture around the powerhead, promoting rust and corrosion.

Removal from Storage

Check your powerhead as described in the *BEFORE OPERATION CHECKS* section of this manual (see page 7).

If the fuel was drained during storage preparation, fill the tank with fresh gasoline. If you keep a container of gasoline for refueling, be sure it contains only fresh gasoline. Gasoline oxidizes and deteriorates over time, causing hard starting.

If the cylinder was coated with oil during storage preparation, the engine will smoke briefly at startup. This is normal.

TRANSPORTING

If the engine has been running, allow it to cool for at least 15 minutes before loading the powerhead on the transport vehicle. A hot engine and exhaust system can burn you and can ignite some materials.

Always turn the engine switch to the OFF position. Make sure the fuel cap is securely tightened.
Carrying the powerhead by hand:
Attach it to the carrying harness or hold the main pipe to carry it with good balance.

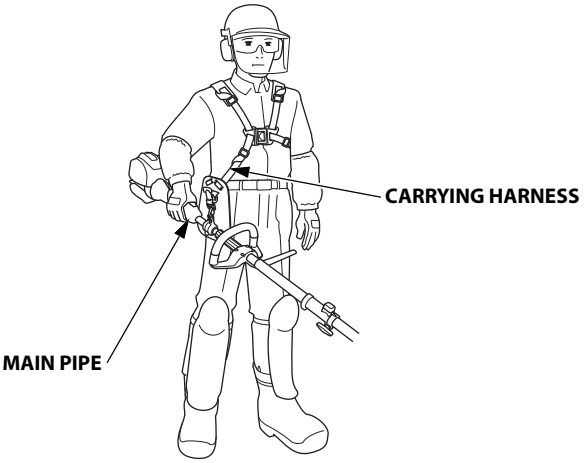

Transporting the powerhead by vehicle:
Secure the powerhead. Make sure it will not move or fall down.

TAKING CARE OF UNEXPECTED PROBLEMS

ENGINE WILL NOT START

Possible Cause	Correction
Choke open.	Move lever to CLOSED position unless the engine is warm.
Engine switch OFF.	Turn engine switch to ON position.
Out of fuel.	Refuel (p. 14).
Bad fuel; powerhead stored without treating or draining gasoline, or refueled with bad gasoline.	Drain fuel tank and carburetor (p. 20). Refuel with fresh gasoline (p. 14).
Spark plug faulty, fouled, or improperly gapped.	Gap or replace spark plug (p. 17).
Spark plug wet with fuel (flooded engine).	Allow the spark plug to dry. After drying, install the spark plug and start the engine (p. 11).
Fuel filter restricted, carburetor malfunction, ignition malfunction, valves stuck, etc.	Take powerhead to your servicing dealer, or refer to shop manual.

ENGINE LACKS POWER

Possible Cause	Correction
Filter element restricted.	Clean or replace filter element (p. 16).
Bad fuel; powerhead stored without treating or draining gasoline, or refueled with bad gasoline.	Drain fuel tank and carburetor (p. 20). Refuel with fresh gasoline (p. 14).
Fuel filter restricted, carburetor malfunction, ignition malfunction, valves stuck, etc.	Take powerhead to your servicing dealer, or refer to shop manual.

TECHNICAL & CONSUMER INFORMATION

TECHNICAL INFORMATION

Serial Number Location

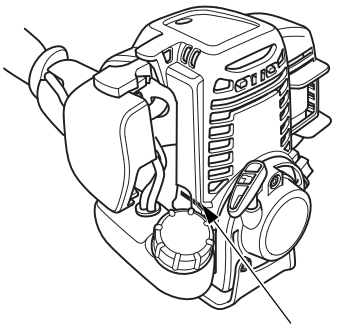

ENGINE SERIAL NUMBER

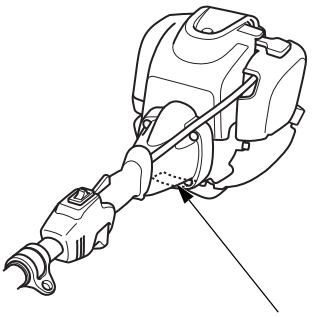

FRAME SERIAL NUMBER

Record the engine and frame serial numbers in the spaces below. You will need these serial numbers when ordering parts and when making technical or warranty inquiries.

Engine serial number: _____

Frame serial number: _____

Date Purchased: _____ / _____ / _____

Carburetor Modifications for High Altitude Operation

At high altitude, the standard carburetor air-fuel mixture will be too rich. Performance will decrease, and fuel consumption will increase. A very rich mixture will also foul the spark plug and cause hard starting. Operation at an altitude that differs from that at which this engine was certified, for extended periods of time, may increase emissions.

High altitude performance can be improved by specific modifications to the carburetor. If you always operate your powerhead at altitudes above 2,000 feet (610 meters), have your servicing dealer perform this carburetor modification. This engine, when operated at high altitude with the carburetor modifications for high altitude use, will meet each emission standard throughout its useful life.

Even with carburetor modification, engine horsepower will decrease about 3.5% for each 1,000-foot (300-meter) increase in altitude. The effect of altitude on horsepower will be greater than this if no carburetor modification is made.

NOTICE

When the carburetor has been modified for high altitude operation, the air-fuel mixture will be too lean for low altitude use. Operation at altitudes below 2,000 feet (610 meters) with a modified carburetor may cause the engine to overheat and result in serious engine damage. For use at low altitudes, have your servicing dealer return the carburetor to original factory specifications.

Emission Control System Information

Source of Emissions

The combustion process produces carbon monoxide, oxides of nitrogen, and hydrocarbons. Control of hydrocarbons and oxides of nitrogen is very important because, under certain conditions, they react to form photochemical smog when subjected to sunlight. Carbon monoxide does not react in the same way, but it is toxic.

Honda utilizes appropriate air/fuel ratios and other emissions control systems to reduce the emissions of carbon monoxide, oxides of nitrogen, and hydrocarbons.

Additionally, Honda fuel systems utilize components and control technologies to reduce evaporative emissions.

The U.S. and California Clean Air Acts, and Environment and Climate Change Canada (ECCC)

U.S. EPA, California and Canadian regulations require all manufacturers to furnish written instructions describing the operation and maintenance of emission control systems.

The following instructions and procedures must be followed in order to keep the emissions from your Honda engine within the emission standards.

Tampering and Altering

NOTICE

Tampering is a violation of Federal and California law.

Tampering with or altering the emission control system may increase emissions beyond the legal limit. Among those acts that constitute tampering are:

- Removal or alteration of any part of the intake, fuel, or exhaust systems.
- Alterations that would cause the engine to operate outside its design parameters.

Problems That May Affect Emissions

If you are aware of any of the following symptoms, have your engine inspected and repaired by your authorized Honda Power Equipment dealer.

- Hard starting or stalling after starting.
- Rough idle.
- Misfiring or backfiring under load.
- Afterburning (backfiring).
- Black exhaust smoke or high fuel consumption.

Replacement Parts

The emissions control systems on your new Honda engine were designed, built, and certified to conform with EPA, California (models certified for sale in California only), and Canadian emissions regulations. We recommend the use of Honda Genuine parts whenever you have maintenance done. These original-design replacement parts are manufactured to the same standards as the original parts, so you can be confident of their performance. Honda cannot deny coverage under the emission warranty solely for the use of non-Honda replacement parts or service performed at a location other than an authorized Honda dealership; you may use comparable EPA certified parts, and have service performed at non- Honda locations. However, the use of replacement parts that are not of the original design and quality may impair the effectiveness of your emissions control system.

A manufacturer of an aftermarket part assumes the responsibility that the part will not adversely affect emissions performance. The manufacturer or rebuilder of the part must certify that use of the part will not result in a failure of the engine to comply with emissions regulations.

Maintenance

As the power equipment engine owner, you are responsible for completing all required maintenance listed in your owner's manual. Honda recommends that you retain all receipts covering maintenance on your power equipment engine, but Honda cannot deny warranty coverage solely for the lack of receipts or for your failure to ensure that all scheduled maintenance has been completed.

Follow the *MAINTENANCE SCHEDULE* on page 13. Remember that this schedule is based on the assumption that your Honda engine product will be used for its designed purpose. Sustained high-load or high-temperature operation, or use in dusty conditions, will require more frequent service.

Air Index
(Models certified for sale in California)

An Air Index Information hang tag/label is applied to engines certified to an emission durability time period in accordance with the requirements of the California Air Resources Board.

The bar graph is intended to provide you, our customer, the ability to compare the emissions performance of available engines. The lower the Air Index, the less pollution.

The durability description is intended to provide you with information relating to the engine's emission durability period. The descriptive term indicates the useful life period for the engine's emission control system. See your *Emission Control System Warranty* (see page 24) for additional information.

Descriptive Term	Applicable to Emissions Durability Period
Moderate	50 hours (0–80 cc, inclusive) 125 hours (greater than 80 cc)
Intermediate	125 hours (0–80 cc, inclusive) 250 hours (greater than 80 cc)
Extended	300 hours (0–80 cc, inclusive) 500 hours (greater than 80 cc) 1,000 hours (225 cc and greater)

The Air Index Information hang tag/label must remain on the powerhead until it is sold. Remove the hang tag before operating the powerhead.

Emission Control System Warranty

Your Honda Power Equipment engine is designed, built, and equipped to meet the U.S. EPA, Environment Canada, and California Air Resources Board (models certified for sale in California only) emission standard for spark ignited engines. American Honda Motor provides the emission warranty coverage for engines in the United States and its territories. Honda Canada provides the emission warranty for engines in the 13 provinces and territories of Canada.

Warranty Coverage

Honda Power Equipment engines certified to the U.S. EPA, Environment Canada, and State of California (models certified for sale in California only) emission regulations are covered by this warranty to be free from defects in materials and workmanship that may keep it from meeting the applicable U.S. EPA, CARB and Canadian emissions requirements for a minimum of 2 years or the length of the Honda Power Equipment Distributor's Limited Warranty, whichever is longer, from the original date of delivery to the retail purchaser. This warranty is transferable to each subsequent purchaser for the duration of the warranty period. Warranty repairs will be made without charge for diagnosis, parts, and labor. Information about how to make a warranty claim, as well as a description of how a claim can be made and/or how service can be provided, can be obtained by contacting an authorized Honda Power Equipment dealer or by contacting the following:

American Honda
Email: powerequipmentemissions@ahm.honda.com
Telephone: (888) 888-3139
Honda Canada
Telephone: (888) 946-6329

The covered components include all components whose failure would increase an engine's emissions of any regulated pollutant or evaporative emissions. A list of specific components can be found in the separately included emissions warranty statement.

Specific warranty terms, coverage, limitations, and manner of seeking warranty service are also set forth in the separately included emissions warranty statement. In addition, the emission warranty statement can also be found on the Honda Power equipment website or at the following link:
http://powerequipment.honda.com/support/warranty

Specifications

MODEL	UMC425		UMC435	
Description code	HAGT	HALT	HAHT	HAMT
Type	LAAT	LAC1, LAC2	LAAT	LAC1, LAC2

Frame

MODEL	UMC425	UMC435
Handle type	Loop	
Clutch type	Centrifugal clutch	
Overall length	44.7 in (1,135 mm)	45.1 in (1,145 mm)
Overall width	12.4 in (315 mm)	12.6 in (320 mm)
Overall height	9.6 in (245 mm)	10.0 in (255 mm)
Dry mass (weight)	11.2 lbs (5.1 kg)	13.2 lbs (6.0 kg)

Engine

MODEL	UMC425
Engine model	GX25T
Engine description code	GCALT
Engine type	4-stroke, overhead cam, single cylinder
Displacement	1.5 cu-in (25.0 cm^3)
Bore x Stroke	1.4 × 1.0 in (35.0 × 26.0 mm)
Idle speed	3,100 ± 200 rpm
Maximum no load engine speed	MIN. 10,000 rpm
Cooling system	Forced air
Ignition system	Transistor magneto
Engine oil capacity	2.7 oz (0.08 L, 2.82 fl Imp oz)
Fuel tank capacity	0.14 US gal (0.53 L, 18.7 fl Imp oz)
Spark plug	CMR5H (NGK)

Engine

MODEL	UMC435
Engine model	GX35T
Engine description code	GCAMT
Engine type	4-stroke, overhead cam, single cylinder
Displacement	2.18 cu-in (35.8 cm^3)
Bore x Stroke	1.5 × 1.2 in (39.0 × 30.0 mm)
Idle speed	3,100 ± 200 rpm
Maximum no load engine speed	MIN. 10,000 rpm
Cooling system	Forced air
Ignition system	Transistor magneto
Engine oil capacity	3.3 oz (0.10 L, 3.52 fl Imp oz)
Fuel tank capacity	0.17 US gal (0.63 L, 22.2 fl Imp oz)
Spark plug	CMR5H (NGK)

Specifications may vary according to the types, and are subject to change without notice.

Tuneup Specifications

ITEM	SPECIFICATION	MAINTENANCE
Spark plug gap	0.024–0.028 in (0.6–0.7 mm)	Refer to page: 17
Idle speed	3,100±200 rpm	See your servicing dealer
Valve clearance (cold)	IN: 0.08±0.02 mm EX: 0.11±0.02 mm	
Other specifications	No other adjustments needed.	

Quick Reference Information

Fuel	Regular unleaded gasoline with an ethanol content of no more than 10% and a pump octane rating of 86 or higher (see page 14).
Engine oil	SAE 10W-30, API SJ or later, for general use. Include capacities: UMC425: 2.7 oz (0.08 L, 2.82 fl Imp oz) UMC435: 3.3 oz (0.10 L, 3.52 fl Imp oz) Refer to page 14.
Spark plug	CMR5H (NGK)
Maintenance	Before each use: • Check engine oil level. Refer to page 14. • Check air filter. Refer to page 16.
	First 10 hours: Change engine oil. Refer to page 15.
	Subsequent: Refer to the maintenance schedule on page 13.

CONSUMER INFORMATION

Dealer Locator Information

To find an authorized Honda Servicing Dealer
For USA:
Visit our website: http://powerequipment.honda.com/dealer-locator
For Canada:
Call 1-888-946-6329 or visit our website:
English
http://powerequipment.honda.ca/dealerlocator
French
http://powerequipment.honda.ca/trouver-concessionaire

Honda Publications (For USA and Canada)

Shop Manual
This manual covers complete maintenance and overhaul procedures. It is intended to be used by a skilled technician.
For USA:
Available through your Honda dealer or visit
http://powerequipment.honda.com/support/shop-manuals
For Canada:
Contact your dealer for information on the Shop Manual.

Parts Catalog
For USA:
This manual provides complete, illustrated parts lists. Available through your Honda dealer.
For Canada:
Contact your dealer for information on parts.

Accessories Catalog
Your authorized Honda power equipment dealer offers a selection of accessories (optional equipment) to make your Powerhead even more useful.
For USA:
Visit http://powerequipment.honda.com/trimmers/accessories
and click on see all powerhead accessories to see the entire catalog of accessories.
For Canada:
Check with your dealer or visit www.honda.ca and select the Accessories tab under the Powerhead segment to view the range of accessories available for your model.

Customer Service Information (For USA and Canada)

Honda Power Equipment dealership personnel are trained professionals. They should be able to answer any question you may have. If you encounter a problem that your dealer does not solve to your satisfaction, please discuss it with the dealership's management. The Service Manager or General Manager can help. Almost all problems are solved in this way.

If you are dissatisfied with the decision made by the dealership's management, contact the Honda Power Equipment Customer Relations Office. You can write to:

American Honda Motor Co., Inc.
Power Equipment Division
Customer Relations Office
4900 Marconi Drive
Alpharetta, Georgia 30005 – 8847
Telephone: (770) 497-6400
9:00 am to 7:30 pm ET

In Canada:
Honda Canada, Inc.
Customer Relation Department
180 Honda Boulevard
Markham, Ontario L6C 0H9
Tel: 1-888-946-6329 (Toll free)
Fax: 1-877-939-0909 (Toll free)
E-mail: honda_cr@ch.honda.com

When you write or call, please give us this information:
- Model and serial numbers (see page 22)
- Name of the dealer who sold the Powerhead to you
- Name and address of the dealer who services your Powerhead
- Date of purchase
- Your name, address, and telephone number
- A detailed description of the problem

HONDA