EPSON

ET-4900 Series L5390 Series
ET-2900 Series ET-2920 Series L3360 Series

User's Guide

Printing

Copying

Scanning

Faxing

Maintaining the Printer

Solving Problems

NPD7649-02 EN

Contents

Guide to This Manual

Introduction to the Manuals. 7
Important Safety Instructions (paper manual). . . . 7
Start Here (paper manual). 7
User's Guide (digital manual). 7
Information on the Latest Manuals. 7
Searching for Information. 7
Printing Only the Pages You Need. 8
About This Manual. 9
Marks and Symbols. 9
Notes on Screenshots and Illustrations. 9
Operating System References. 10
Trademarks. 10
Copyright. 11

Important Instructions

Safety Instructions. 13
Safety Instructions for Ink. 13
Printer Advisories and Warnings. 14
Advisories and Warnings for Setting Up the Printer. 14
Advisories and Warnings for Using the Printer. . 14
Advisories and Warnings for Using the LCD Screen. 15
Advisories and Warnings for Connecting to the Internet. 15
Advisories and Warnings for Using the Printer with a Wireless Connection. 15
Advisories and Warnings for Transporting or Storing the Printer. 15
Notes on the Administrator Password. 15
Protecting Your Personal Information. 17

Part Names and Functions

Front. 19
Inside. 20
Rear. 21

Guide to the Control Panel

Control Panel. 24
Home Screen Configuration. 25
Guide to the Network Icons. 26
Entering Characters. 26

Loading Paper

Paper Handling Precautions. 29
Paper Size and Type Settings. 30
List of Paper Types. 30
Loading Paper. 32
Loading Paper in the Rear Paper Feeder. 32
Loading Various Paper. 34
Loading Envelopes. 34
Loading Pre-punched Paper. 34
Loading Long Papers. 35

Placing Originals

Placing Originals on the ADF. 37
Placing Originals on the Scanner Glass. 38

Printing

Printing Documents. 41
Printing from a Computer. 41
Printing Documents from Mobile Devices. 56
Printing on Envelopes. 58
Printing on Envelopes from a Computer (Windows). 58
Printing on Envelopes from a Computer (Mac OS). 58
Printing Web Pages. 58
Printing Web Pages from a Computer. 58
Printing Web Pages from Mobile Devices. 59
Printing Using a Cloud Service. 59

Copying

Available Copying Methods. 62
Copying Originals. 62
Copying by Enlarging or Reducing. 63
Copying Multiple Originals onto One Sheet. . . . 63
Copying ID card. 65
Copying Without Margins. 66
Menu Options for Copying. 66
The number of copies:. 66
Color Mode:. 66
More Menu Options for Copying. 66
Density:. 66
Paper Setting:. 67
Reduce/Enlarge:. 67

Original Size:. 67
Multi-Page:. 67
Quality:. 67
ID Card Copy:. 67
Borderless Copy:. 67
Clear All Settings:. 67

Scanning

Basic Information on Scanning. 69
What is a "Scan"?. 69
Scanning Uses. 69
Available Scanning Methods. 69
Recommended File Formats. 72
Recommended Resolutions. 72
Scanning Originals to a Computer. 73
Scanning from the Control Panel. 73
Scanning from a Computer. 74
Scanning Using WSD. 75
Scanning Using Mopria Scan. 76
Scanning Originals to a Mobile Device. 76
Advanced Scanning. 76
Scanning Multiple Photos at the Same Time. . . . 76

Faxing

Before Using Fax Features. 79
Connecting the Printer to a Phone Line. 79
Preparing the Printer to Send and Receive Faxes. 82
Configuring the Printer's Fax Features. 84
Making Contacts Available. 87
Overview of this Printer's Fax Features. 90
Sending Faxes. 90
Receiving Faxes. 91
PC-FAX Send/Receive (Windows/Mac OS). 91
Various Fax Reports. 92
Security when Sending and Receiving Faxes. . . . 92
Other Useful Features. 92
Sending Faxes Using the Printer. 93
Selecting Recipients. 93
Various Ways of Sending Faxes. 94
Receiving Faxes on the Printer. 96
Receiving Incoming Faxes. 97
Receiving Faxes by Making a Phone Call. 98
Menu Options for Faxing. 99
Contacts:. 99
Recent:. 99
Menu:. 99
Using Other Faxing Features. 101
Printing Fax Report Manually. 101
Sending a Fax from a Computer. 102
Sending Documents Created Using an Application (Windows). 102
Sending Documents Created Using an Application (Mac OS). 104
Receiving Faxes on a Computer. 106
Checking for New Faxes (Windows). 106
Checking for New Faxes (Mac OS). 107
Canceling the Feature that Saves Incoming Faxes to the Computer. 108

Maintaining the Printer

Checking the Ink Levels. 110
Reset the Ink Level. 110
Improving Print, Copy, Scan, and Fax Quality. . . . 111
Adjusting the Print Quality. 111
Checking and Cleaning the Print Head. 112
Running Power Cleaning. 114
Running Power Ink Flushing. 115
Preventing nozzle clogging. 116
Aligning the Print Head. 116
Cleaning the Paper Path for Ink Smears. 116
Cleaning the Scanner Glass. 117
Cleaning the ADF. 117
Cleaning the Printer. 120
Cleaning Spilled ink. 121

In These Situations

When Replacing a Computer. 123
Saving Power. 123
Disabling your Wi-Fi Connection. 123
Checking the Total Number of Pages Fed Through the Printer. 124
Installing the Applications Separately. 124
Checking if a genuine Epson printer driver is installed - Windows. 125
Checking if a genuine Epson printer driver is installed - Mac OS. 127
Resetting the Network Connection. 127
Adjusting Settings When Connecting to a Computer. 127
Adjusting Settings When Connecting to a Mobile Device. 128
Configuring Wi-Fi Settings from the Control Panel. 129
Checking the Printer's Network Connection Status (Network Connection Report). 132

Messages and Solutions on the Network Connection Report. 133
Connecting a Device and Printer Directly (Wi-Fi Direct). 139
About Wi-Fi Direct. 139
Connecting to Devices using Wi-Fi Direct. 139
Disconnecting Wi-Fi Direct (Simple AP) Connection. 140
Changing Wi-Fi Direct (Simple AP) Settings. . . 141
Adding or Changing the Printer's Connection. . . . 142
To Set Up a Printer on Multiple Computers. . . . 142
Changing the Connection from Wi-Fi to USB. . 143
Changing the Network Connection from Wi-Fi to Ethernet. 144
Setting a Static IP Address for the Printer. 144
Enabling Energy Efficient Ethernet. 145
Transporting and Storing the Printer. 145

Solving Problems

Cannot Print, Copy, Scan, or Fax. 151
Problem Solving. 151
The Application or Printer Driver do not Work Properly. 152
The Printer Cannot Connect to the Network. . . 156
Cannot Send or Receive Faxes. 160
Paper Does Not Feed Properly. 165
Printing, Copying, Scanning, and Faxing Quality is Poor. 169
Print Quality is Poor. 169
Copy Quality is Poor. 179
Scanned Image Problems. 185
The Quality of the Sent Fax is Poor. 188
Received Fax Quality is Poor. 190
Cannot Select Paper Type or Paper Source in Printer Driver. 191
A genuine Epson printer driver has not been installed.. 191
An Error Code is Displayed on the LCD Screen. . . 191
Paper Gets Jammed. 193
Removing Jammed Paper. 193
Removing Jammed Paper from the ADF. 196
Preventing Paper Jams. 198
It is Time to Refill the Ink. 199
Ink Bottle Handling Precautions. 199
Refilling the Ink Tanks. 200
It is Time to Replace the Maintenance Box. 205
Maintenance Box Handling Precautions. 205
Replacing a Maintenance Box. 205
Cannot Operate the Printer as Expected. 210
The Printer Does Not Turn On or Off. 210
Operations are Slow. 212
LCD Screen Gets Dark. 213
The Printer Is Loud. 213
The Date and Time Are Incorrect. 214
The Root Certificate Needs to be Updated. 214
Cannot Perform Manual 2-sided Printing (Windows). 214
The Print Settings Menu is Not Displayed (Mac OS). 214
A Message Prompting You to Reset the Ink Level is Displayed Even After Refilling the Ink. . 215
The Ink Level Display does not Change Even After Refilling the Ink. 215
If you cannot clear a paper jam or paper out error. 215
Cannot Solve Problem. 219
Cannot Solve Printing or Copying Problems. . . 220

Product Information

Paper Information. 222
Available Paper and Capacities. 222
Unavailable Paper Types. 227
Consumable Products Information. 227
Ink Bottle Codes. 227
Maintenance Box Code. 229
Software Information. 229
Application for Printing from a Computer (Windows Printer Driver). 230
Application for Printing from a Computer (Mac OS Printer Driver). 231
Application for Controlling the Scanner (Epson Scan 2). 231
Application for Configuring Fax Operations and Sending Faxes (FAX Utility). 231
Application for Sending Faxes (PC-FAX Driver) 232
Application for Configuring Printer Operations (Web Config). 232
Application for Updating Software and Firmware (Epson Software Updater). 233
Settings Menu List. 234
Printer Setup. 234
Network Settings. 238
Epson Connect Services. 239
Contacts Manager. 240
Fax Settings. 240
Print Status Sheet. 246
Print Counter. 246
Customer Research. 246
Restore Default Settings. 246
Firmware Update. 247

Product Specifications. 247
Printer Specifications. 247
Scanner Specifications. 249
ADF Specifications. 249
Fax Specifications. 249
Interface Specifications. 250
Network Specifications. 250
Supported Third Party Services. 252
Dimensions. 253
Electrical Specifications. 254
Environmental Specifications. 255
System Requirements. 255
Regulatory Information. 256
Standards and Approvals. 256
Restrictions on Copying. 259

Where to Get Help

Technical Support Web Site. 262
Contacting Epson Support. 262
Before Contacting Epson. 262
Help for Users in the U.S. and Canada. 262
Help for Users in Europe. 263
Help For Users in Middle East, Turkey, Africa, Central and West Asia. 263
Help for Users in Taiwan. 263
Help for Users in Australia. 264
Help for Users in New Zealand. 264
Help for Users in Singapore. 265
Help for Users in Thailand. 265
Help for Users in Vietnam. 266
Help for Users in Indonesia. 266
Help for Users in Hong Kong. 266
Help for Users in Malaysia. 267
Help for Users in India. 267
Help for Users in the Philippines. 268

Guide to This Manual

Introduction to the Manuals. 7

Searching for Information. 7

Printing Only the Pages You Need. 8

About This Manual. 9

Trademarks. 10

Copyright. 11

Introduction to the Manuals

The following manuals are supplied with your Epson printer. As well as the manuals, check the various types of help information available from the printer itself or from the Epson software applications. The availability of manuals varies by location.

Important Safety Instructions (paper manual)

Provides you with instructions to ensure the safe use of this printer.

Start Here (paper manual)

Provides you with information on setting up the printer and installing the software.

User's Guide (digital manual)

This manual. Available as a PDF and Web manual. Provides detailed information and instructions on using the printer and solving problems.

This manual is used for the ET-4900 Series/L5390 Series and ET-2900 Series/ET-2920 Series/L3360 Series. The following features are only available for the ET-4900 Series/L5390 Series.

- ❏ Faxing
- ❏ ADF (Automatic Document Feeder)
- ❏ Ethernet connection

Information on the Latest Manuals

U.S. and Canada

To view the latest manuals, visit https://support.epson.com and search for your product.

Other Regions

- ❏ Paper manual

  Visit the Epson Europe support website at https://www.epson.eu/support, or the Epson worldwide support website at https://support.epson.net/.

- ❏ Digital manual

  Visit the following website, enter the product name, and then go to **Support**.

  https://epson.sn

Searching for Information

The PDF manual allows you to search for information you are looking for by keyword, or jump directly to specific sections using the bookmarks. This section explains how to use a PDF manual that has been opened in Adobe Acrobat Reader on your computer.

Searching by keyword

Click **Menu** > **Search** > **Advanced Search**. Enter the keyword (text) for information you want to find in the search window, and then click **Search**. Hits are displayed as a list. Click one of the displayed hits to jump to that page.

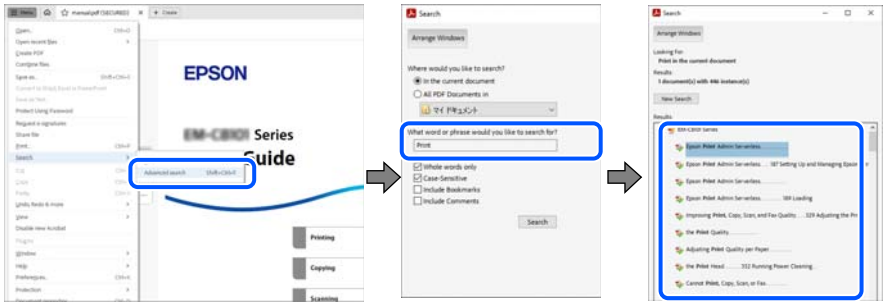

Jumping directly from bookmarks

Click a title to jump to that page. Click + or > to view the lower level titles in that section. To return to the previous page, perform the following operation on your keyboard.

❏ Windows: Hold down **Alt**. and then press ←.

❏ Mac OS: Hold down the command key, and then press ←.

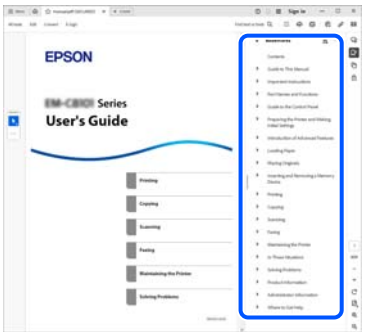

Printing Only the Pages You Need

You can extract and print only the pages you need. Click **Print** in the **File** menu, and then specify the pages you want to print in **Pages** in **Pages to Print**.

❏ To specify a series of pages, enter a hyphen between the start page and the end page.

Example: 20-25

❏ To specify pages that are not in series, divide the pages with commas.
Example: 5, 10, 15

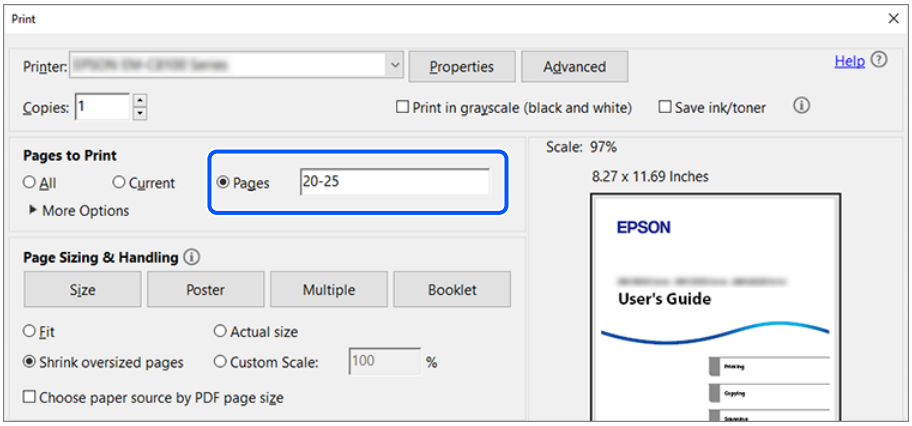

About This Manual

This section explains the meaning of marks and symbols, notes on descriptions, and operating system reference information used in this manual.

Marks and Symbols

Caution:
Instructions that must be followed carefully to avoid bodily injury.

Important:
Instructions that must be observed to avoid damage to your equipment.

Note:
Provides complementary and reference information.

Related Information

➡ Links to related sections.

Provides Web Video Manuals of the operating instructions. See the related information link.

Notes on Screenshots and Illustrations

❏ Screenshots of the printer driver are from Windows 11 or macOS High Sierra (10.13). The content displayed on the screens varies depending on the model, situation, and region.

❏ Illustrations used in this manual are examples only. Although there may be slight differences depending on the model, the instructions are the same.

❏ Some of the menu items on the LCD screen vary depending on the model, settings, and region.

❏ You can read any QR codes in this guide with a QR code reader app.

Operating System References

Windows

In this manual, terms such as "Windows 11", "Windows 10", "Windows 8.1", "Windows 8", "Windows 7", "Windows Server 2025", "Windows Server 2022", "Windows Server 2019", "Windows Server 2016", "Windows Server 2012 R2", "Windows Server 2012", "Windows Server 2008 R2", and "Windows Server 2008" refer to the following operating systems. Additionally, "Windows" is used to refer to all versions.

❏ Microsoft® Windows® 11 operating system

❏ Microsoft® Windows® 10 operating system

❏ Microsoft® Windows® 8.1 operating system

❏ Microsoft® Windows® 8 operating system

❏ Microsoft® Windows® 7 operating system

❏ Microsoft® Windows Server® 2025 operating system

❏ Microsoft® Windows Server® 2022 operating system

❏ Microsoft® Windows Server® 2019 operating system

❏ Microsoft® Windows Server® 2016 operating system

❏ Microsoft® Windows Server® 2012 R2 operating system

❏ Microsoft® Windows Server® 2012 operating system

❏ Microsoft® Windows Server® 2008 R2 operating system

❏ Microsoft® Windows Server® 2008 operating system

Mac OS

In this manual, "Mac OS" is used to refer to Mac OS X 10.9.5 or later as well as macOS 10.12 or later.

Trademarks

❏ Microsoft, Excel, Microsoft Edge, Windows and Windows Server are trademarks of the Microsoft group of companies.

❏ Apple, Mac, macOS, OS X, Bonjour, Safari, AirPrint, iPad, iPhone, and iPod touch are trademarks of Apple Inc., registered in the U.S. and other countries.

❏ Use of the Works with Apple badge means that an accessory has been designed to work specifically with the technology identified in the badge and has been certified by the developer to meet Apple performance standards.

❏ The Mopria™ word mark and the Mopria™ Logo are registered and/or unregistered trademarks of Mopria Alliance, Inc. in the United States and other countries. Unauthorized use is strictly prohibited.

❏ IOS is a trademark or registered trademark of Cisco in the U.S. and other countries and is used under license.

❏ Chrome, ChromeOS, Chromebook, Google Play and Android are trademarks of Google LLC.

- ❏ Adobe, Acrobat, and Reader are either registered trademarks or trademarks of Adobe in the United States and/or other countries.
- ❏ QR Code is a registered trademark of DENSO WAVE INCORPORATED in Japan and other countries.
- ❏ Firefox is a trademark of the Mozilla Foundation in the U.S. and other countries.
- ❏ Wi-Fi® and Wi-Fi Direct® are registered trademarks of Wi-Fi Alliance®. Wi-Fi Protected Setup™, WPA™, WPA2™ and WPA3™ are trademarks of Wi-Fi Alliance®.
- ❏ General Notice: All other trademarks are the property of their respective owners and used for identification purposes only.

Copyright

No part of this publication may be reproduced, stored in a retrieval system, or transmitted in any form or by any means, electronic, mechanical, photocopying, recording, or otherwise, without the prior written permission of Seiko Epson Corporation. No patent liability is assumed with respect to the use of the information contained herein. Neither is any liability assumed for damages resulting from the use of the information herein. The information contained herein is designed only for use with this Epson product. Epson is not responsible for any use of this information as applied to other products.

Neither Seiko Epson Corporation nor its affiliates shall be liable to the purchaser of this product or third parties for damages, losses, costs, or expenses incurred by the purchaser or third parties as a result of accident, misuse, or abuse of this product or unauthorized modifications, repairs, or alterations to this product, or (excluding the U.S.) failure to strictly comply with Seiko Epson Corporation's operating and maintenance instructions.

Seiko Epson Corporation and its affiliates shall not be liable for any damages or problems arising from the use of any options or any consumable products other than those designated as Original Epson Products or Epson Approved Products by Seiko Epson Corporation.

Seiko Epson Corporation shall not be held liable for any damage resulting from electromagnetic interference that occurs from the use of any interface cables other than those designated as Epson Approved Products by Seiko Epson Corporation.

© 2025-2026 Seiko Epson Corporation

The contents of this manual and the specifications of this product are subject to change without notice.

Important Instructions

Safety Instructions. 13

Printer Advisories and Warnings. 14

Protecting Your Personal Information. 17

Safety Instructions

Read and follow these instructions to ensure safe use of this printer. Make sure you keep this manual for future reference. Also, be sure to follow all warnings and instructions marked on the printer.

- ❏ Some of the symbols used on your printer are to ensure safety and proper use of the printer. Visit the following Web site to learn the meaning of the symbols.

  https://support.epson.net/symbols/

- ❏ Use only the power cord supplied with the printer and do not use the cord with any other equipment. Use of other cords with this printer or the use of the supplied power cord with other equipment may result in fire or electric shock.
- ❏ If the power cord that comes with your printer has a grounding pin, connect the printer to a grounded outlet. Failure to follow this instruction may result in fire or electric shock.
- ❏ Be sure your power cord meets the relevant local safety standard.
- ❏ Never disassemble, modify, or attempt to repair the power cord, plug, printer unit, scanner unit, or options by yourself, except as specifically explained in the printer's manuals.
- ❏ Unplug the printer and refer servicing to qualified service personnel under the following conditions:

  The power cord or plug is damaged; liquid has entered the printer; the printer has been dropped or the casing damaged; the printer does not operate normally or exhibits a distinct change in performance. Do not adjust controls that are not covered by the operating instructions.

- ❏ Place the printer near a wall outlet where the plug can be easily unplugged.
- ❏ Do not place or store the printer outdoors, near excessive dirt or dust, water, heat sources, or in locations subject to shocks, vibrations, high temperature or humidity.
- ❏ Do not spill liquid on the printer or handle the printer with wet hands.
- ❏ Keep the printer at least 22 cm (8.7 in.) away from cardiac pacemakers. Radio waves from this printer may adversely affect the operation of cardiac pacemakers.
- ❏ If the LCD screen is damaged, in the U.S. and Canada, contact Epson support. In other regions, contact your dealer. If the liquid crystal solution gets on your hands, wash them thoroughly with soap and water. If the liquid crystal solution gets into your eyes, flush them immediately with water. If discomfort or vision problems remain after a thorough flushing, see a doctor immediately.
- ❏ Avoid using a telephone during an electrical storm. There may be a remote risk of electric shock from lightning.
- ❏ Do not use a telephone to report a gas leak in the vicinity of the leak.

Safety Instructions for Ink

- ❏ Be careful not to touch any ink when you handle the ink tanks, ink tank caps, and opened ink bottles or ink bottle caps.
  - ❏ If ink gets on your skin, wash the area thoroughly with soap and water.
  - ❏ If ink gets into your eyes, flush them immediately with water. If discomfort or vision problems continue after a thorough flushing, see a doctor immediately.
  - ❏ If ink gets into your mouth, see a doctor right away.
- ❏ Do not disassemble the maintenance box; otherwise ink may get into your eyes or on your skin.
- ❏ Do not shake an ink bottle too vigorously or subject it to strong impacts as this can cause ink to leak.
- ❏ Keep ink bottles and maintenance box out of the reach of children. Do not drink the ink.

Printer Advisories and Warnings

Read and follow these instructions to avoid damaging the printer or your property. Make sure you keep this manual for future reference.

Advisories and Warnings for Setting Up the Printer

- ❏ Do not block or cover the vents and openings in the printer.
- ❏ Use only the type of power source indicated on the printer's label.
- ❏ Avoid using outlets on the same circuit as photocopiers or air control systems that regularly switch on and off.
- ❏ Avoid electrical outlets controlled by wall switches or automatic timers.
- ❏ Keep the entire computer system away from potential sources of electromagnetic interference, such as loudspeakers or the base units of cordless telephones.
- ❏ The power cord should be placed to avoid abrasions, cuts, fraying, crimping, and kinking. Do not place objects on top of the power cord and do not allow the power cord to be stepped on or run over. Be particularly careful to keep all the power cord straight at the ends.
- ❏ If you use an extension cord with the printer, make sure that the total ampere rating of the devices plugged into the extension cord does not exceed the cord's ampere rating. Also, make sure that the total ampere rating of all devices plugged into the wall outlet does not exceed the wall outlet's ampere rating.
- ❏ If you plan to use the printer in Germany, the building installation must be protected by a 10 or 16 amp circuit breaker to provide adequate short-circuit protection and over-current protection for the printer.
- ❏ When connecting the printer to a computer or other device with a cable, ensure the correct orientation of the connectors. Each connector has only one correct orientation. Inserting a connector in the wrong orientation may damage both devices connected by the cable.
- ❏ Place the printer on a flat, stable surface that extends beyond the base of the printer in all directions. The printer will not operate properly if it is tilted at an angle.
- ❏ Allow space above the printer so that you can fully raise the document cover.
- ❏ Leave enough space in front of the printer for the paper to be fully ejected.
- ❏ Avoid places subject to rapid changes in temperature and humidity. Also, keep the printer away from direct sunlight, strong light, or heat sources.

Advisories and Warnings for Using the Printer

- ❏ Do not insert objects through the slots in the printer.
- ❏ Do not put your hand inside the printer during printing.
- ❏ Do not touch the white flat cable or ink tubes inside the printer.
- ❏ Do not use aerosol products that contain flammable gases inside or around the printer. Doing so may cause fire.
- ❏ Do not move the print head by hand; otherwise, you may damage the printer.
- ❏ Be careful not to trap your fingers when closing the scanner unit.
- ❏ Do not press too hard on the scanner glass when placing originals.

- ❏ Prolonged use of the printer when the ink level is below the lower line could damage the printer. Fill the ink tank to the upper line while the printer is not operating. To display the correct ink level estimate, reset the ink level after filling the tank.
- ❏ Always turn the printer off using the ⏻ button. Do not unplug the printer or turn off the power at the outlet until the ⏻ light stops flashing.
- ❏ If you are not going to use the printer for a long period, be sure to unplug the power cord from the electrical outlet.

Advisories and Warnings for Using the LCD Screen

- ❏ The LCD screen may contain a few small bright or dark spots, and because of its features it may have an uneven brightness. These conditions are normal and do not indicate that it is damaged in any way.
- ❏ Only use a dry, soft cloth for cleaning. Do not use liquid or chemical cleaners.
- ❏ The exterior cover of the LCD screen could break if it receives a heavy impact. If the screen's surface chips or cracks, contact Epson support (U.S. and Canada) or your dealer (other regions), and do not touch or attempt to remove the broken pieces.

Advisories and Warnings for Connecting to the Internet

Do not connect this product to the Internet directly. Connect it to a network protected by a router or firewall.

Advisories and Warnings for Using the Printer with a Wireless Connection

- ❏ Radio waves from this printer may negatively affect the operation of medical electronic equipment, causing it to malfunction. When using this printer inside medical facilities or near medical equipment, follow directions from the authorized personnel representing the medical facilities, and follow all posted warnings and directions on the medical equipment.
- ❏ Radio waves from this printer may negatively affect the operation of automatically controlled devices such as automatic doors or fire alarms, and could lead to accidents due to malfunction. When using this printer near automatically controlled devices, follow all posted warnings and directions on these devices.

Advisories and Warnings for Transporting or Storing the Printer

- ❏ When storing or transporting the printer, avoid tilting it, placing it vertically, or turning it upside down; otherwise ink may leak.
- ❏ Before transporting the printer, make sure that the print head is in the home (far right) position.

Notes on the Administrator Password

This printer allows you to set an administrator password to prevent unauthorized access or changes to its settings when the product is connected to a network.

Default Value of the Administrator Password

The default value of the administrator password is printed on a label on the product, such as one of the labels shown below.

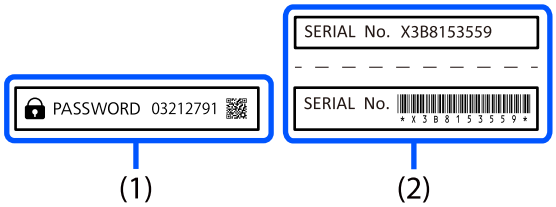

If both labels (1) and (2) are attached, the value next to PASSWORD written on the label in (1) is the default value. In this example, the default value is 03212791.

Note:
As the label (1) may be attached in a location that is difficult to see, check the information in the link to confirm the location.

https://support.epson.net/manu/adminpw/index.html

If you cannot find the label (1), the serial number printed on the label in (2) is the default value. In this example, the default value is X3B8153559.

Changing the Administrator Password

For security reasons, we recommend changing the default password.

It can be changed from Web Config. When changing the password, make sure the new password has at least 8 single-byte alphanumerical characters and symbols.

Related Information

➡ "Running Web Config on a Web Browser" on page 233

Operations that Require You to Enter the Administrator Password

If you are prompted to enter the administrator password when performing the following operations, enter the administrator password set on the printer.

❏ When updating the firmware of the printer from a computer or mobile device

❏ When accessing the advanced settings in Web Config

❏ When adjusting settings using an application, such as Fax Utility, that can change the printer's settings

Initializing the Administrator Password

You can return the administrator password to its default setting by initializing the network settings.

Related Information

➡ "Restore Default Settings" on page 246

Protecting Your Personal Information

When you give the printer to someone else or dispose of it, erase all the personal information stored in the printer's memory by selecting **More** > **Settings** > **Restore Default Settings** > **Clear All Data and Settings** on the control panel.

Part Names and Functions

Front. 19

Inside. 20

Rear. 21

Front

ET-4900 Series/L5390 Series

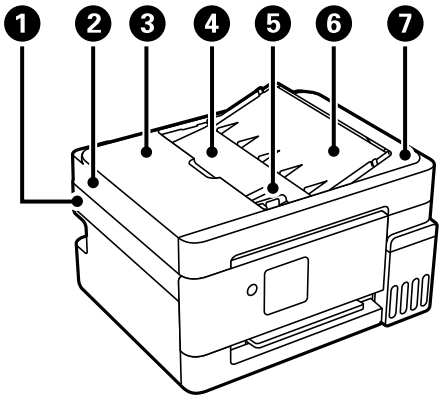

1	Scanner unit	Scans placed originals. Open to remove jammed paper. This unit should usually be kept closed.
2	ADF (Automatic Document Feeder)	Holds multiple originals.
3	ADF cover	Open when removing jammed originals in the ADF.
4	ADF input tray	Feeds originals automatically.
5	ADF edge guide	Slide to the edges of the originals so that they feed straight into the printer.
6	ADF document support	Supports originals.
7	ADF output tray	Holds originals ejected from the ADF.

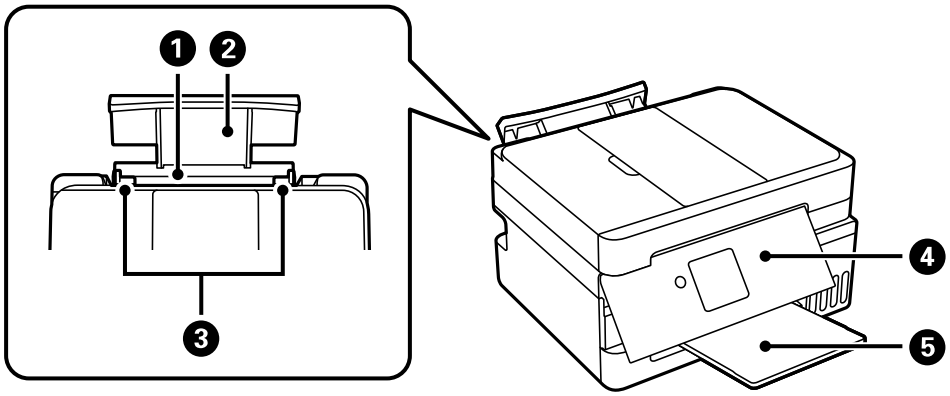

1	Rear paper feeder	Loads paper.
2	Paper support	Supports loaded paper.
3	Edge guides	Slide to the edges of the paper so that it feeds straight into the printer.
4	Control panel	Indicates the printer's status and allows you to select settings.
5	Output tray	Holds the ejected paper.

ET-2900 Series/ET-2920 Series/L3360 Series

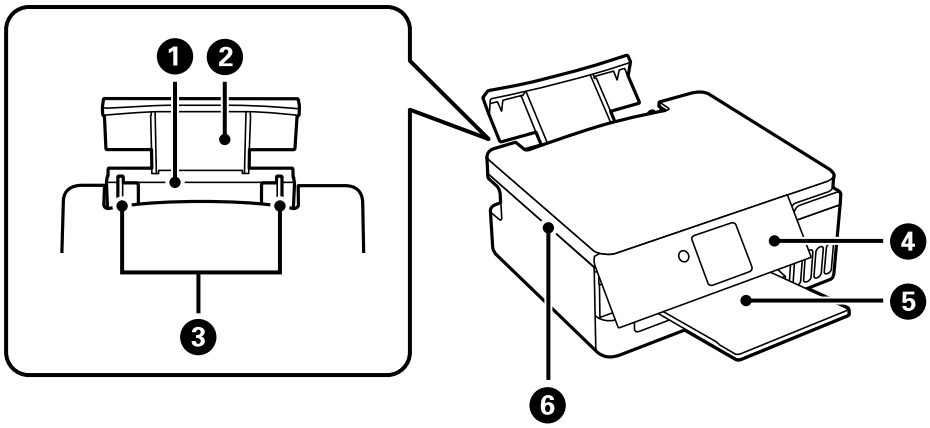

1	Rear paper feeder	Loads paper.
2	Paper support	Supports loaded paper.
3	Edge guides	Slide to the edges of the paper so that it feeds straight into the printer.
4	Control panel	Indicates the printer's status and allows you to select settings.
5	Output tray	Holds the ejected paper.
6	Scanner unit	Scans placed originals. Open to remove jammed paper. This unit should usually be kept closed.

Inside

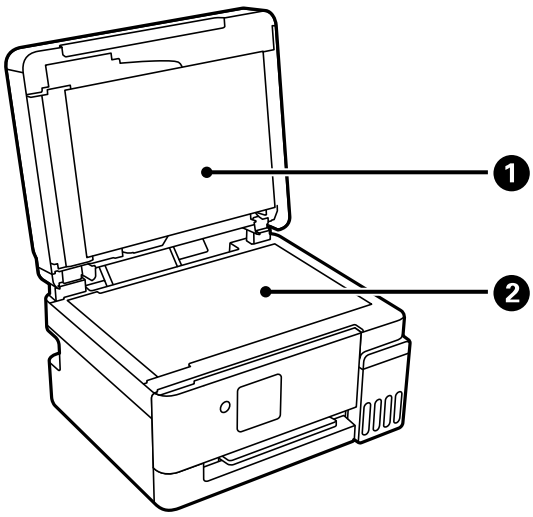

1	Document cover	Blocks external light while scanning.
2	Scanner glass	Place the originals.

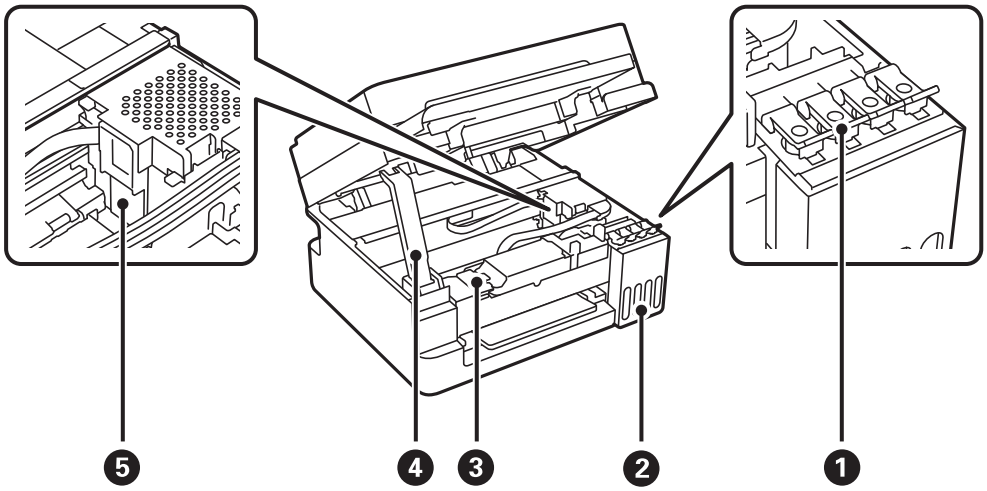

❶	Ink tank cap	Open to refill the ink tank.
❷	Ink reservoir tank (Ink tank)	Supplies ink to the print head.
❸	Maintenance box cover	Open when replacing the maintenance box. The maintenance box is a container that collects a very small amount of surplus ink during cleaning or printing.
❹	Scanner unit support	Supports the scanner unit when the scanner unit is opened.
❺	Print head	Ink is ejected from the print head nozzles underneath.

Rear

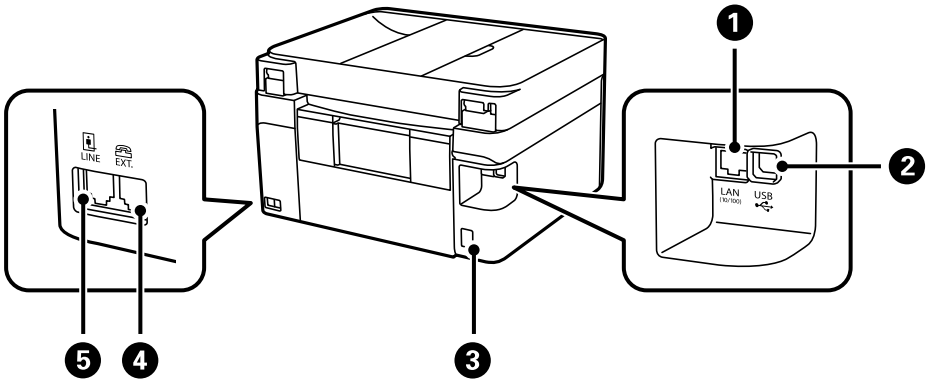

❶	LAN port*	Connect a LAN cable.
❷	USB port	Connect a USB cable to connect with a computer.
❸	AC inlet	Connect the power cord.
❹	EXT. port*	Connect external phone devices.
❺	LINE port*	Connect a phone line.

* Only for ET-4900 Series/L5390 Series

Guide to the Control Panel

Control Panel. 24

Home Screen Configuration. 25

Guide to the Network Icons. 26

Entering Characters. 26

Control Panel

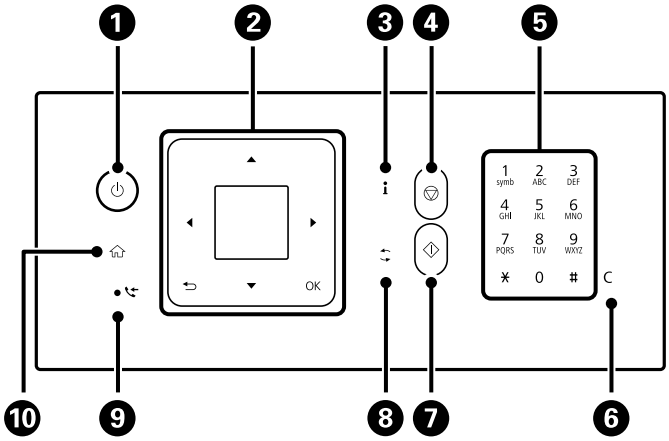

❶	Turns the printer on or off. Make sure the power light is off before you unplug the power cord.
❷	Screen Displays menus and messages. Use buttons on the control panel to select menus or settings.
	▲▼◀▶ buttons and OK button Use the ▲▼◀▶ buttons to highlight a menu or setting, and then press the OK button to select it.
	⮌ button Press this button to return to the previous screen.
❸	Press this button to display the printer's status or solutions when an issue occurs. You can also check the network connection status. "Guide to the Network Icons" on page 26
❹	Press this button to stop the current operation.
❺*	Enter numbers, characters, and symbols.
❻*	Press this button to clear number settings such as the number of copies.
❼	Press this button to start an operation such as printing or copying.
❽	Applies to a variety of functions depending on the situation.
❾*	Turns on when received faxes that have not yet been printed or saved are stored in the printer's memory.
❿	Press this button to display the home screen.

* Only for ET-4900 Series/L5390 Series

Home Screen Configuration

The following home screen is displayed when you turn on the printer or press the button on the control panel. You can easily copy and print by switching the menu and selecting the option you need.

	Allows you to copy documents.
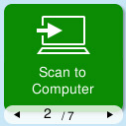	Allows you to scan documents and save them to a computer.
	Allows you to scan documents and save them to a computer using the WSD feature.
	Allows you to send faxes.*
	Allows you to select the paper size and paper type you loaded in the paper source.
	Displays menus that allow you to set up the printer for use on a wireless network.

	Allows you to access the following menus: ❑ Maintenance Displays the menus that allow you to improve the quality of your printouts, such as by unclogging nozzles or aligning the print head. ❑ Settings Allows you to select settings related to maintenance, printer functions, and operations. ❑ Print failure Provides solutions when you cannot print as expected. ❑ Quiet Mode Displays **Quiet Mode** setting. When this feature is enabled, the noise made by printer may be reduced depending on the selected paper type and print quality, but print speed may decrease.

* Only for ET-4900 Series/L5390 Series

Guide to the Network Icons

You can check the network connection status by pressing the **i** button and selecting **Printer Status** > **Network Status**.

	The printer is not connected to a wired (Ethernet) network or a wireless (Wi-Fi) network.*1
	The printer is connected to a wired (Ethernet) network.*1
	The printer is not connected to a wireless (Wi-Fi) network.*2
	The printer is searching for an SSID or unset IP address, or having a problem with a wireless (Wi-Fi) network.
	The printer is connected to a wireless (Wi-Fi) network. The number of bars indicates the signal strength of the connection. The more bars there are, the stronger the connection.
	The printer is not connected to a wireless (Wi-Fi) network in Wi-Fi Direct (Simple AP) mode.
	The printer is connected to a wireless (Wi-Fi) network in Wi-Fi Direct (Simple AP) mode.

*1 Only for ET-4900 Series/L5390 Series

*2 Only for ET-2900 Series/ET-2920 Series/L3360 Series

Entering Characters

To enter characters and symbols for network settings and register contacts from the control panel, use the ▲, ▼, ◀, and ▶ buttons and the software keyboard on the LCD screen. Press the ▲, ▼, ◀, or ▶ button to select a

character or function button on the keyboard, and then press the OK button. When you have finished entering characters, select **OK** on the LCD screen, and then press the OK button on the printer.

Function button	Descriptions
◀ ▶	Moves the cursor to the left or right.
A 1 #	Switches the character type. You can enter letters, numbers, or symbols. You can also switch the character type by using the button on the printer.
␣	Enters a space.
⌫	Deletes the character to the left (backspace).
OK	Enters the selected characters.

Loading Paper

Paper Handling Precautions. 29

Paper Size and Type Settings. 30

Loading Paper. 32

Loading Various Paper. 34

Paper Handling Precautions

- ❏ Read the instruction sheets supplied with the paper.
- ❏ To achieve high-quality printouts with genuine Epson paper, use the paper in the environment stated on the instruction sheets supplied with the paper.
- ❏ Fan and align the edges of the paper before loading. Do not fan or curl photo paper. Doing so may damage the printable side.

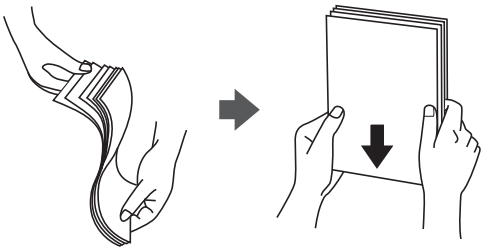

- ❏ If the paper is curled or folded, flatten it or curl it slightly in the opposite direction before loading. Printing on curled or folded paper may cause paper feeding problems and smears on the printouts.

- ❏ Paper feed problems may occur for manual 2-sided printing when printing on one side of pre-printed paper. Reduce the number of sheets to half or less, or load one sheet of paper at a time if paper jams continue.
- ❏ Make sure you are using long-grain paper. If you are not sure what type of paper you are using, check the paper packaging or contact the manufacturer to confirm the paper specifications.
- ❏ Fan and align the edges of envelopes before loading. When stacked envelopes are puffed up with air, press them down to flatten them before loading.

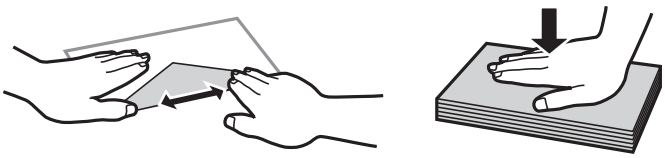

Related Information

➡ "Available Paper and Capacities" on page 222
➡ "Unavailable Paper Types" on page 227

Paper Size and Type Settings

If you register the paper size and type on the screen displayed when you load paper, the printer informs you when the registered information and print settings differ. This prevents you from wasting paper and ink by making sure you are not printing on the wrong paper size or seeing unexpected colors due to using settings that do not match the paper type.

This screen is not displayed if you have disabled **Paper Setup Auto Display**. If you disable this feature, you cannot print from an iPhone, iPad, or iPod touch using AirPrint.

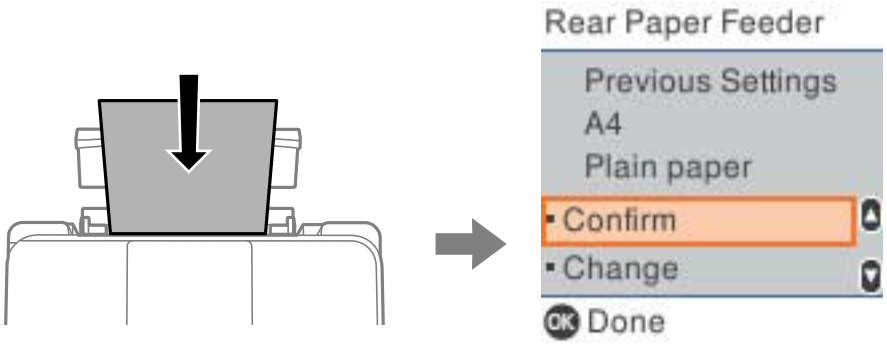

If the displayed paper size and type differ from the loaded paper, change the settings for the paper size and paper type, and then confirm them.

Note:
You can also display the paper size and paper type settings screen by selecting ***Paper Source Settings*** > ***Paper Setting****.*

Related Information

➡ "Paper Setup Auto Display:" on page 235

List of Paper Types

To obtain optimum printing results, select the paper type that suits the paper.

U.S. and Canada

Media Name	Media Type	
	Control Panel	Printer Driver, Mobile Device *
Epson Bright White Premium Paper Epson Multipurpose Plus Paper Epson Bright White Paper / Epson Bright White Pro Paper / Epson EcoTank Premium Paper	Plain paper	Plain paper
Epson Ultra Premium Photo Paper Glossy Epson Value Photo Paper Glossy	Ultra Glossy	Epson Ultra Glossy
Epson Premium Photo Paper Glossy	Prem. Glossy	Epson Premium Glossy

Media Name	Media Type	
	Control Panel	Printer Driver, Mobile Device *
Epson Premium Photo Paper Semi-gloss	Prem. Semigloss	Epson Premium Semigloss
Epson Photo Paper Glossy	Glossy	Photo Paper Glossy
Epson Premium Presentation Paper Matte Epson Premium Presentation Paper Matte Double-Sided	Matte	Epson Matte
Epson Presentation Paper Matte Epson High Quality Ink Jet Paper	Photo Quality Ink Jet	Epson Photo Quality Ink Jet

* For mobile devices, these media types can be selected when printing using Epson Smart Panel.

Other Regions

Media Name	Media Type	
	Control Panel	Printer Driver, Mobile Device *
Epson Bright White Ink Jet Paper	Plain paper	Plain paper
Epson Ultra Glossy Photo Paper Epson Value Glossy Photo Paper	Ultra Glossy	Epson Ultra Glossy
Epson Premium Glossy Photo Paper	Prem. Glossy	Epson Premium Glossy
Epson Premium Semigloss Photo Paper	Prem. Semigloss	Epson Premium Semigloss
Epson Photo Paper Glossy	Glossy	Photo Paper Glossy
Epson Matte Paper-Heavyweight Epson Double-Sided Matte Paper	Matte	Epson Matte
Epson Photo Quality Ink Jet Paper Epson Double-sided Photo Quality Ink Jet Paper	Photo Quality Ink Jet	Epson Photo Quality Ink Jet

* For mobile devices, these media types can be selected when printing using Epson Smart Panel.

Loading Paper

Loading Paper in the Rear Paper Feeder

1. Pull out the paper support.

   ET-4900 Series/L5390 Series

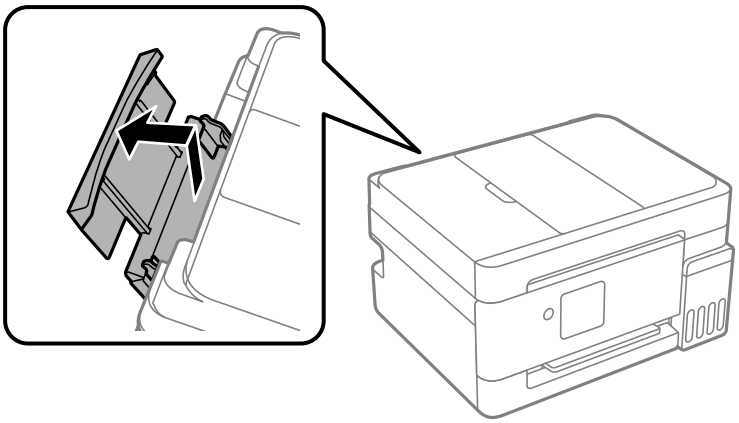

   ET-2900 Series/ET-2920 Series/L3360 Series

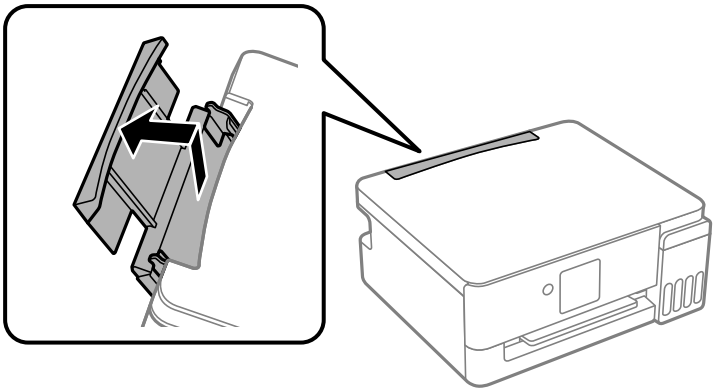

2. Slide out the edge guides.

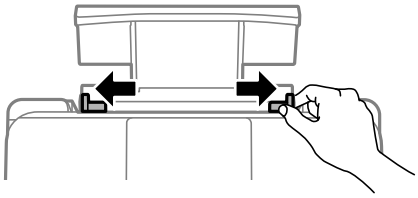

3. Load paper at the center of the paper support with the printable side face-up.

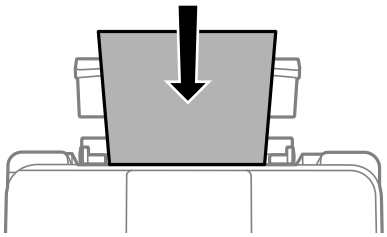

> ***Important:***
> - *Do not load more than the maximum number of sheets specified for the paper. For plain paper, do not load above the line just under the ▼ symbols on the edge guides.*
> - *Load paper short edge first. However, when you have set the long edge as the width of the user defined size, load paper long edge first.*

4. Slide the edge guides to the edges of the paper.

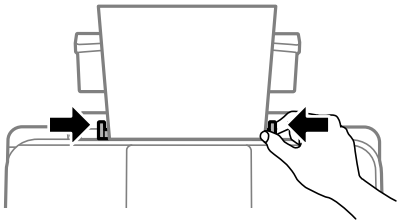

5. Select the paper size and paper type on the LCD screen.

   Note:
   This screen is not displayed if you have disabled ***Paper Setup Auto Display****.*

6. Slide out the output tray.

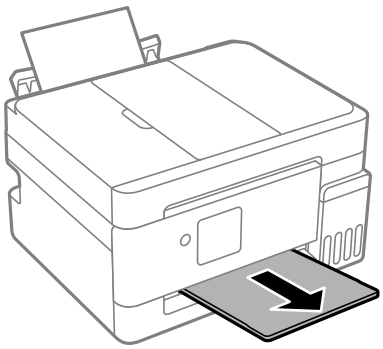

   Note:
   Return the remaining paper to its package. If you leave it in the printer, the paper may curl or the print quality may decline.

Related Information

➡ "Paper Size and Type Settings" on page 30
➡ "Available Paper and Capacities" on page 222

➡ "Unavailable Paper Types" on page 227

Loading Various Paper

Loading Envelopes

Load envelopes at the center of the paper support, short edge first with the flap facing down, and slide the edge guides to the edges of the envelopes.

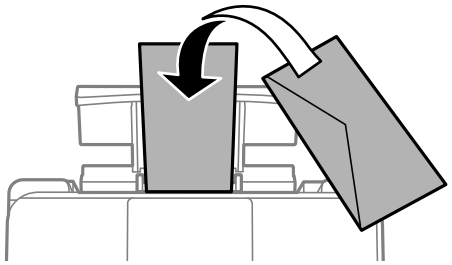

Related Information

➡ "Available Paper and Capacities" on page 222
➡ "Unavailable Paper Types" on page 227

Loading Pre-punched Paper

Load paper at the center of the paper support with the printable side facing up.

Load a single sheet of plain paper with binding holes at the left or right. Adjust the print content in your file as needed to avoid printing over the holes.

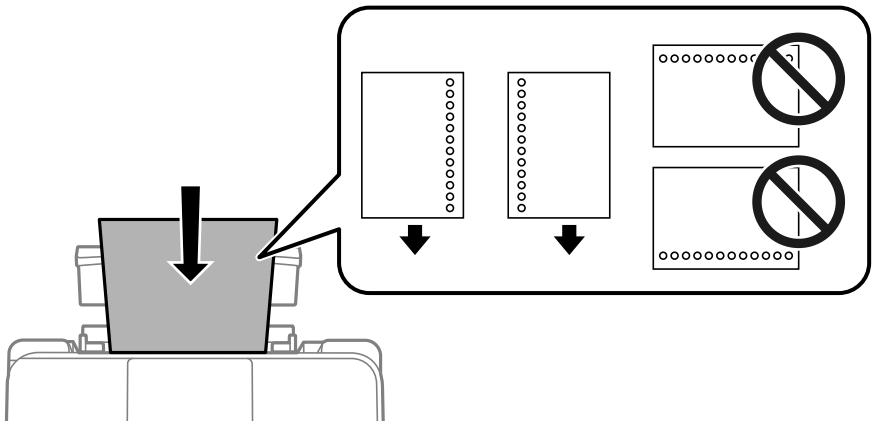

Loading Long Papers

When loading paper longer than legal size, store the paper support, and then flatten the leading edge of the paper. Select **User-Defined** as the paper size setting.

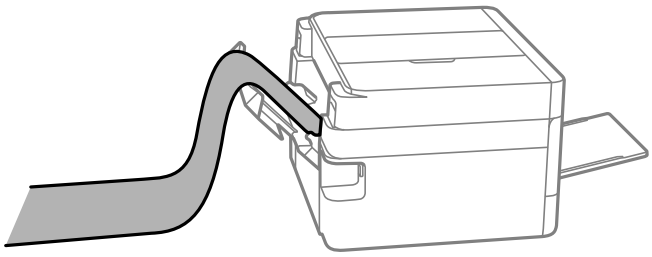

❏ Make sure the leading edge of the paper is cut perpendicularly. A diagonal cut may cause paper feed problems.

❏ Long paper cannot be held in the output tray. Make sure that paper does not fall on the floor.

❏ Do not touch paper that is being fed or ejected. It could injure your hand or cause print quality to decline.

Related Information

➡ "Available Paper and Capacities" on page 222

➡ "Unavailable Paper Types" on page 227

Placing Originals

Placing Originals on the ADF. 37

Placing Originals on the Scanner Glass. 38

Placing Originals on the ADF

1. Align the edges of the originals.

2. Open the ADF input tray.

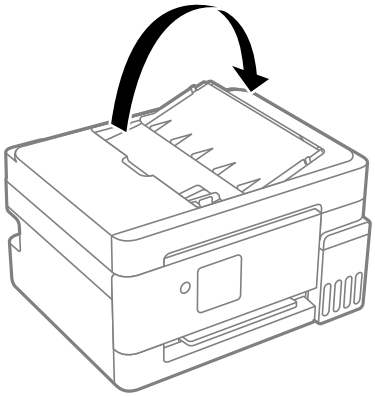

3. Slide out the ADF edge guide.

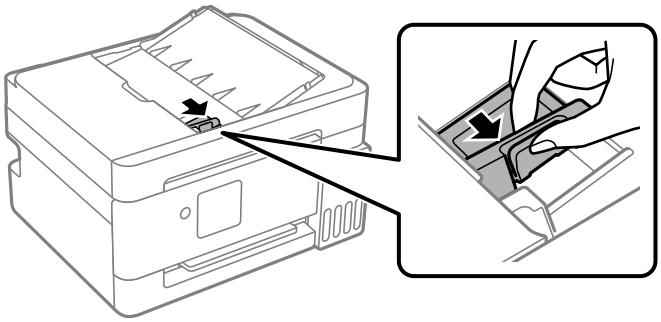

4. Place the originals face-up and short edge first, and then slide the ADF edge guide to the edges of the originals.

   Note:
   When originals are placed in the ADF and on the scanner glass, priority is given to the originals in the ADF. Make sure the original on the scanner glass is placed in the correct position, or you may not be able to scan from the ADF.

   "Placing Originals on the Scanner Glass" on page 38

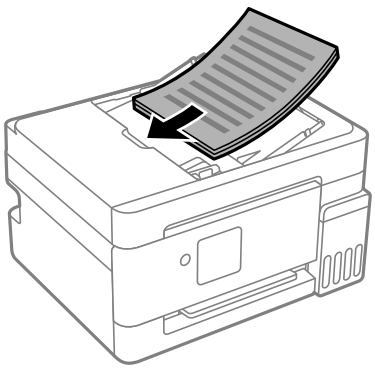

Important:

❏ *Do not load originals above the line indicated by the triangle symbol on the ADF.*

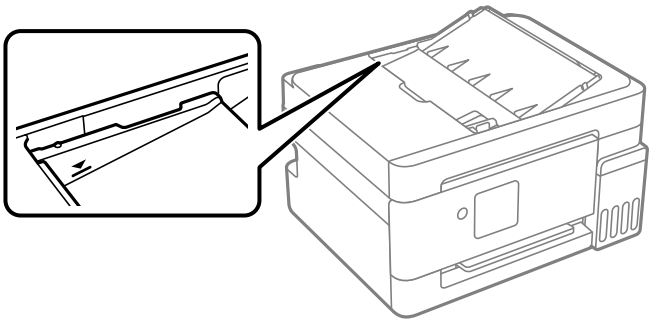

❏ *Do not add originals while scanning.*

Placing Originals on the Scanner Glass

Note:
Make sure there are no clips, pens, or other items on top of the document cover before opening it. If any of these items fall inside the printer, you may not be able to print or perform other operations.

1. Open the document cover.

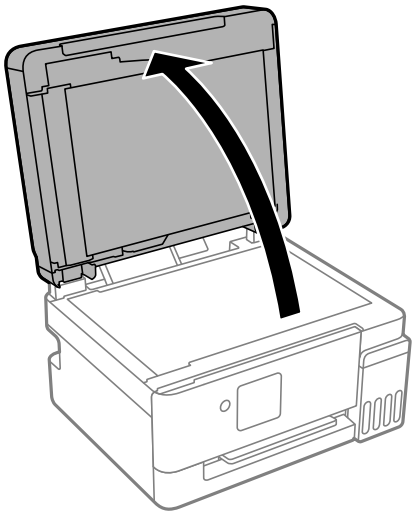

2. Remove any dust or stains on the surface of the scanner glass using a soft, dry, clean cloth.

   Note:
   If there is any dust or stains on the scanner glass, the scanning range may expand to include it, so the image of the original may be displaced or reduced.

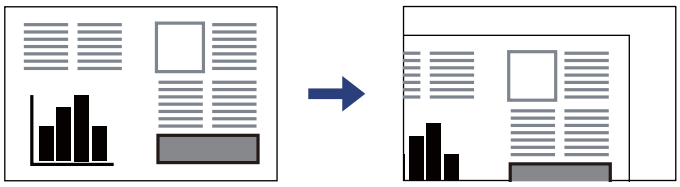

3. Place the original face-down and slide it to the corner mark.

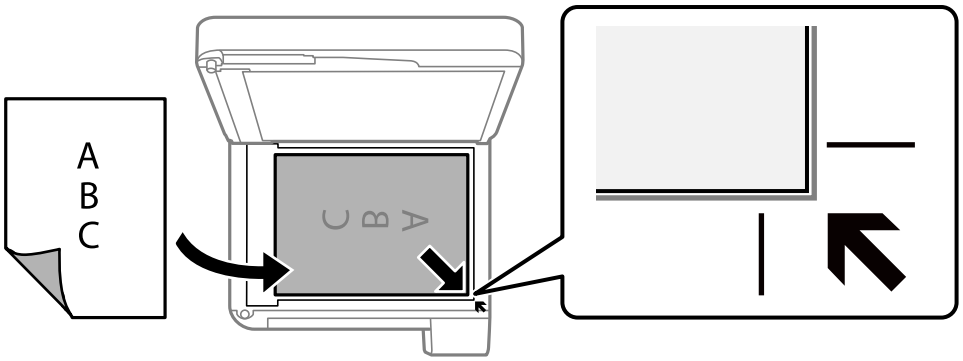

Note:
When originals are placed in the ADF and on the scanner glass, priority is given to the originals in the ADF.

4. Close the cover gently.

> ***Caution:***
> *Be careful not to trap your fingers when closing the document cover. Otherwise you may be injured.*

> ***Important:***
> - *When placing bulky originals such as books, prevent exterior light from shining directly onto the scanner glass.*
> - *Do not apply too much force to the scanner glass or the document cover. Otherwise, they may be damaged.*

5. Remove the originals after scanning.

Note:
If you leave the originals on the scanner glass for a long time, they may stick to the surface of the glass.

Related Information

➡ "Scanner Specifications" on page 249

Printing

Printing Documents. 41

Printing on Envelopes. 58

Printing Web Pages. 58

Printing Using a Cloud Service. 59

Printing Documents

Printing from a Computer

This section explains how to print a document from your computer using Windows as an example. On Mac OS, the procedure may be different or some features may not be supported.

Printing Using Easy Settings

Note:
Operations may differ depending on the application. See the application's help for details.

1. Load paper in the printer.

   "Loading Paper in the Rear Paper Feeder" on page 32

2. Open the file you want to print.

3. Select **Print** or **Print Setup** from the **File** menu.

4. Select your printer.

5. Select **Preferences** or **Properties** to access the printer driver window.

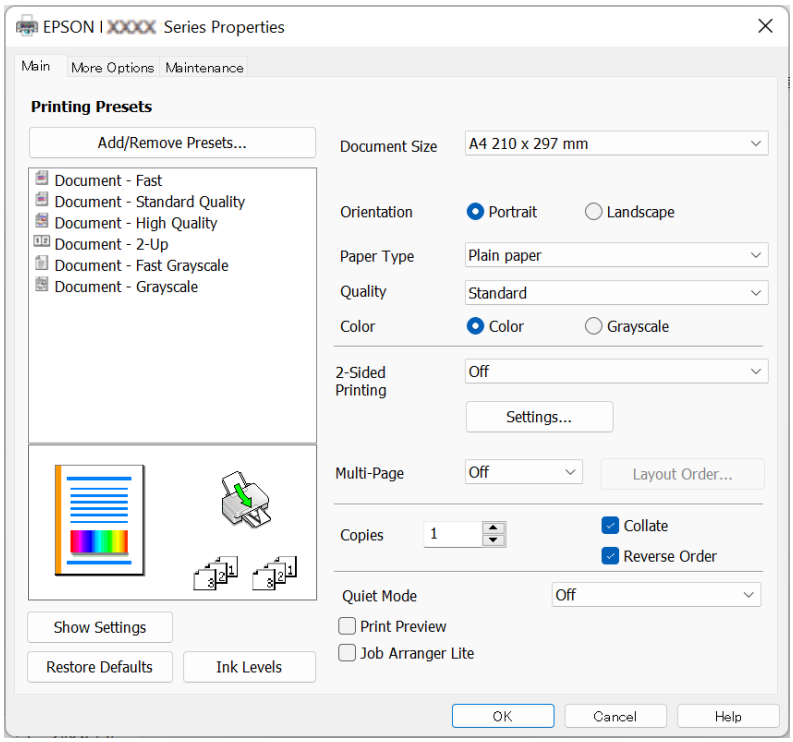

6. Change the settings as necessary.

   You can see the online help for explanations of the setting items. Right-clicking an item displays **Help**.

7. Click **OK** to close the printer driver window.

8. Click **Print**.

Related Information

➡ "List of Paper Types" on page 30
➡ "Available Paper and Capacities" on page 222

Adding Printing Presets for Easy Printing

If you create your own preset for frequently used print settings in the printer driver, you can print easily by selecting the preset from the list.

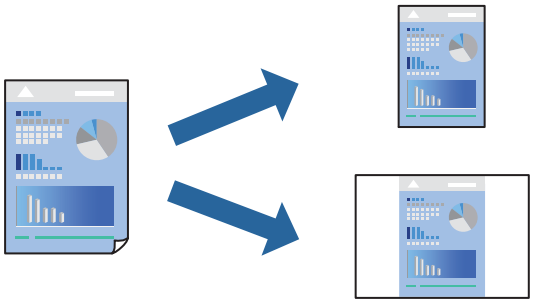

1. On the printer driver's **Main** or **More Options** tab, select the settings you want to include in the preset (such as **Document Size** and **Paper Type**).

2. Click **Add/Remove Presets** in **Printing Presets**.

3. Enter a **Name** and, if necessary, enter a comment.

4. Click **Save**.

   Note:
   *To delete an added preset, click **Add/Remove Presets**, select the preset name you want to delete from the list, and then delete it.*

5. Click **Print**.

The next time you want to print using the same settings, select the registered setting name from **Printing Presets**, and click **OK**.

Printing on 2-Sides

The printer driver will automatically print odd pages and even pages separately. When the odd pages have been printed, turn over the paper according to the instructions in the printer driver to print the even pages.

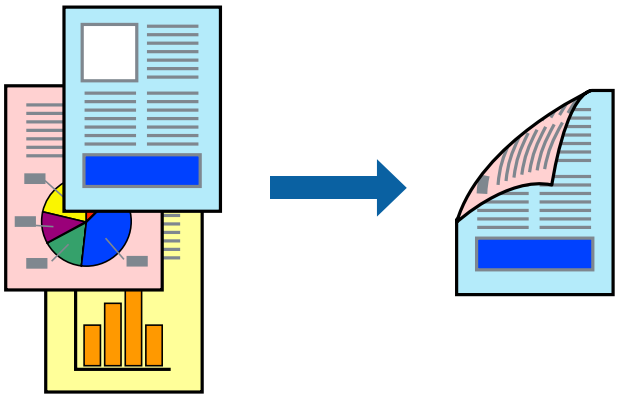

Note:
This feature is not available for borderless printing.

Access the printer driver, and then select the following settings.

Main tab > **2-Sided Printing**

Related Information

➡ "Paper for 2-Sided Printing" on page 226
➡ "Cannot Perform Manual 2-sided Printing (Windows)" on page 214

Printing a Booklet

You can also print a booklet that can be created by re-ordering the pages and folding the printout.

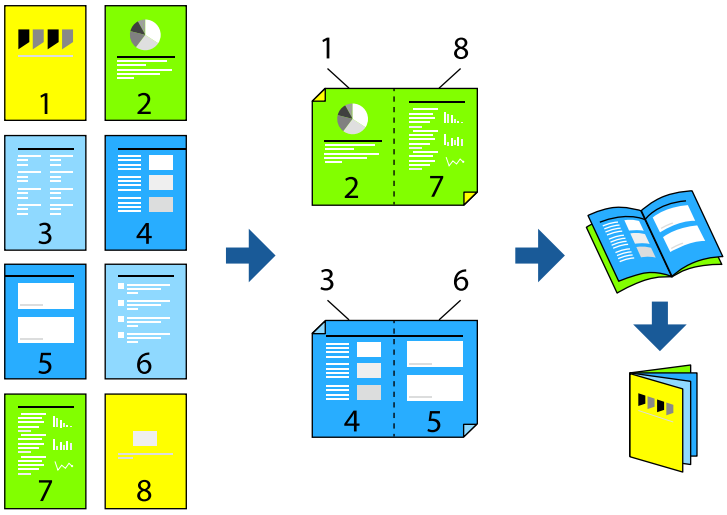

Note:
This feature is not available with borderless printing.

Access the printer driver, and then select the following settings.

On the **Main** tab, select the 2-sided printing method from **2-Sided Printing**, and then select **Settings** > **Booklet**.

Related Information

➡ "Paper for 2-Sided Printing" on page 226
➡ "Cannot Perform Manual 2-sided Printing (Windows)" on page 214

Printing Several Pages on One Sheet

You can print several pages of data on a single sheet of paper.

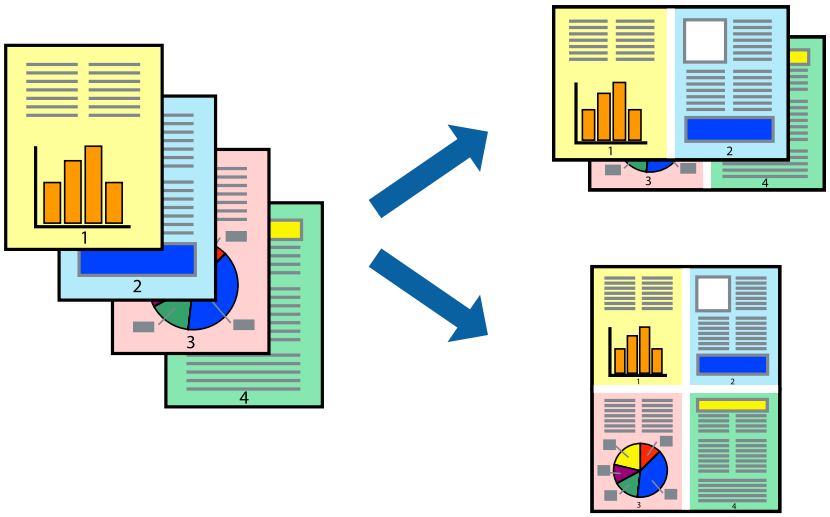

Note:
This feature is not available with borderless printing.

Access the printer driver, and then select the following settings.

Main tab > **Multi-Page** > **2-Up**, etc.

Printing to Fit the Paper Size

You can print to fit the paper size you loaded in the printer.

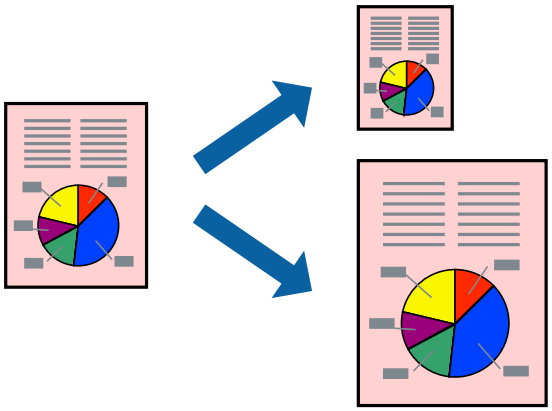

Note:
This feature is not available with borderless printing.

Access the printer driver, and then select the following settings.

On the **More Options** tab, select **Output Paper**, then select the size of the loaded paper.

Printing a Reduced or Enlarged Document at any Magnification

You can reduce or enlarge the size of a document by a specific percentage.

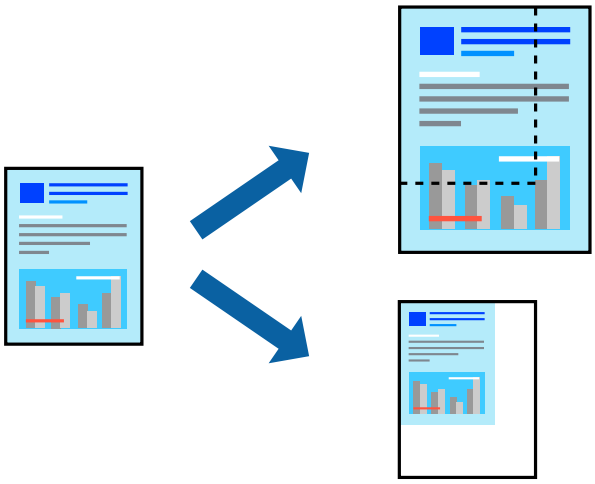

Note:
This feature is not available with borderless printing.

1. On the printer driver's **More Options** tab, select the document size from the **Document Size** setting.
2. Select the paper size you want to print on from the **Output Paper** setting.
3. Select **Reduce/Enlarge Document**, **Zoom to**, and then enter a percentage.

Printing One Image on Multiple Sheets for Enlargement (Creating a Poster)

This feature allows you to print one image on multiple sheets of paper. You can create a larger poster by taping them together.

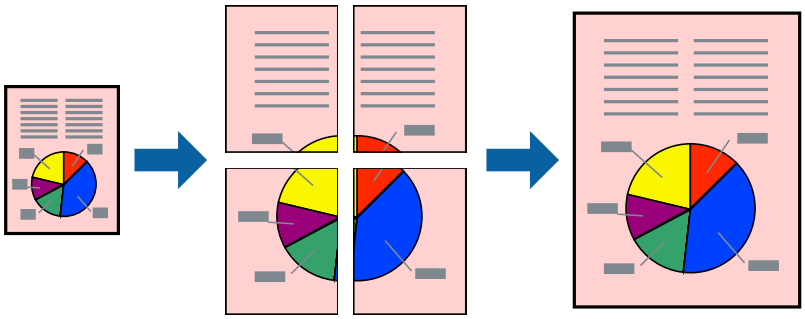

Note:
This feature is not available with 2-sided printing.

Access the printer driver, and then select the following settings.

Main tab > **Multi-Page** > **2x2 Poster**, etc.

Making Posters Using Overlapping Alignment Marks

Here is an example of how to make a poster when **2x2 Poster** is selected, and **Overlapping Alignment Marks** is selected in **Print Cutting Guides**.

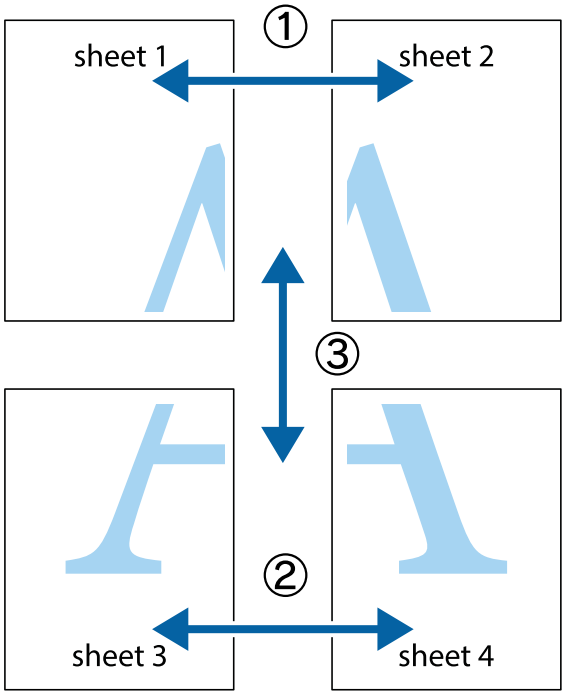

1. Prepare Sheet 1 and Sheet 2. Cut off the margins of Sheet 1 along the vertical blue line through the center of the top and bottom cross marks.

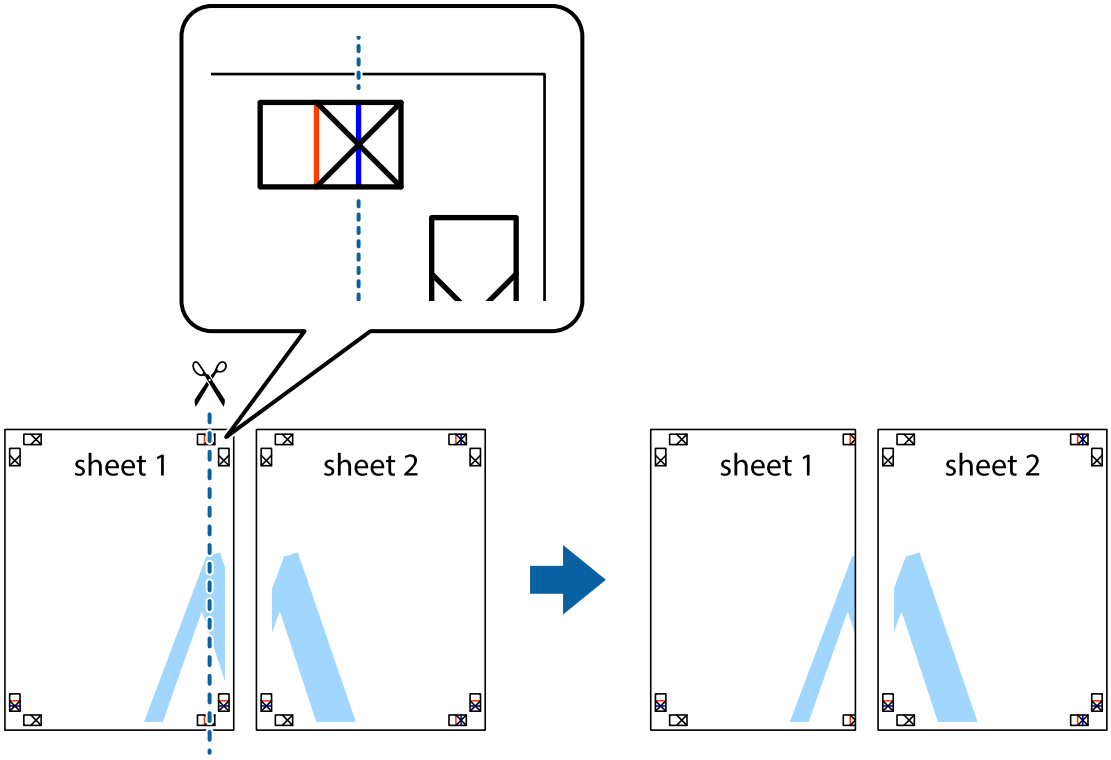

2. Place the edge of Sheet 1 on top of Sheet 2 and align the cross marks, then temporarily tape the two sheets together from the back.

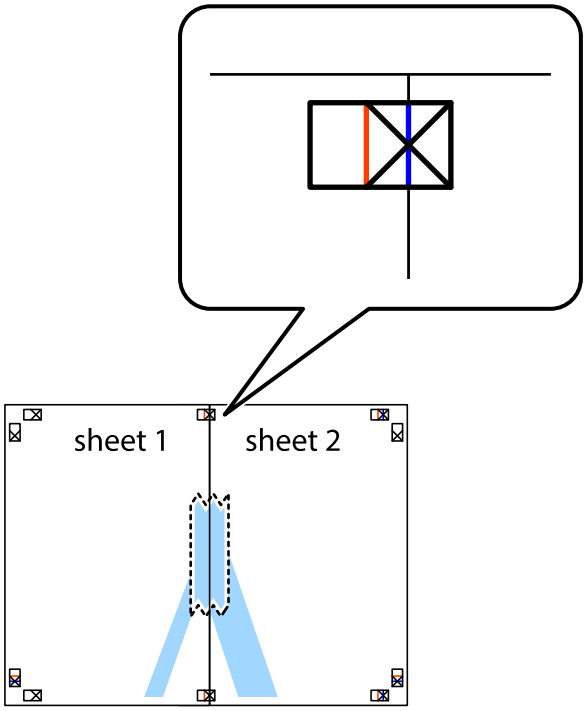

3. Cut the taped sheets in two along the vertical red line through the alignment markers (this time, the line to the left of the cross marks).

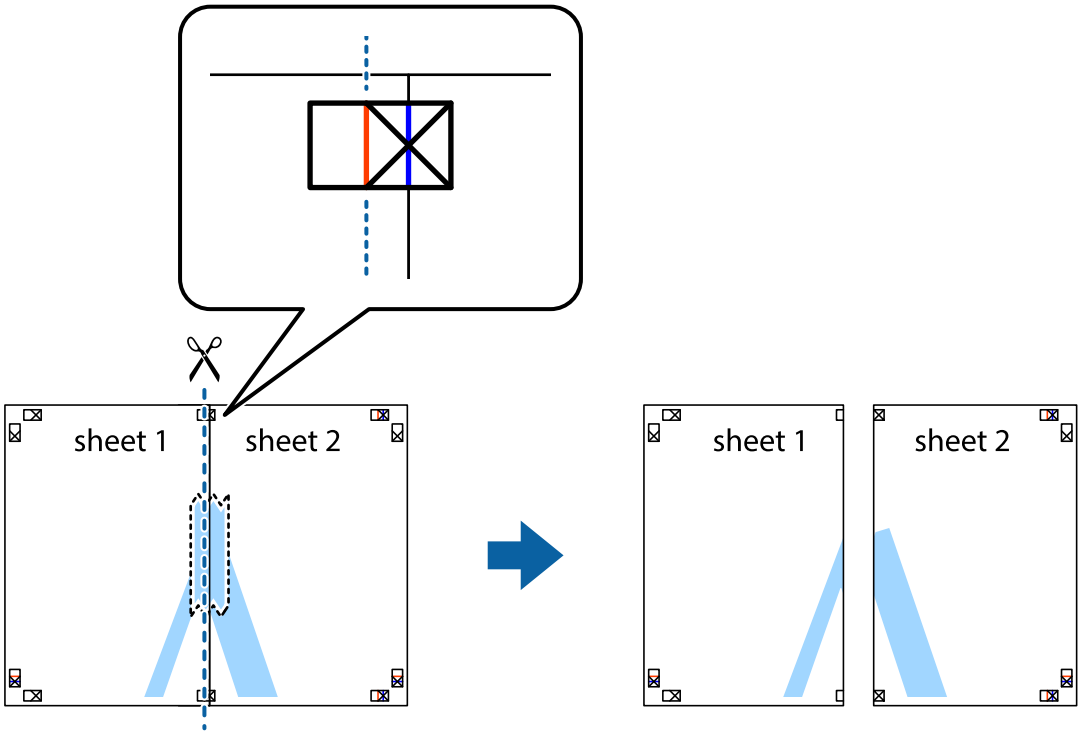

4. Tape the sheets together from the back.

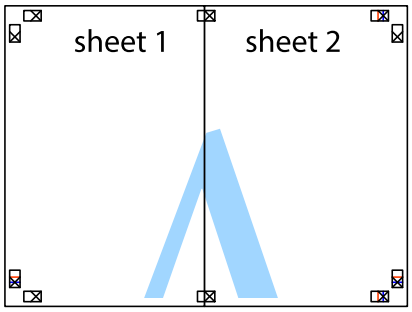

5. Repeat steps 1 to 4 to tape Sheet 3 and Sheet 4 together.

6. Cut off the margins of Sheet 1 and Sheet 2 along the horizontal blue line through the center of the left and right side cross marks.

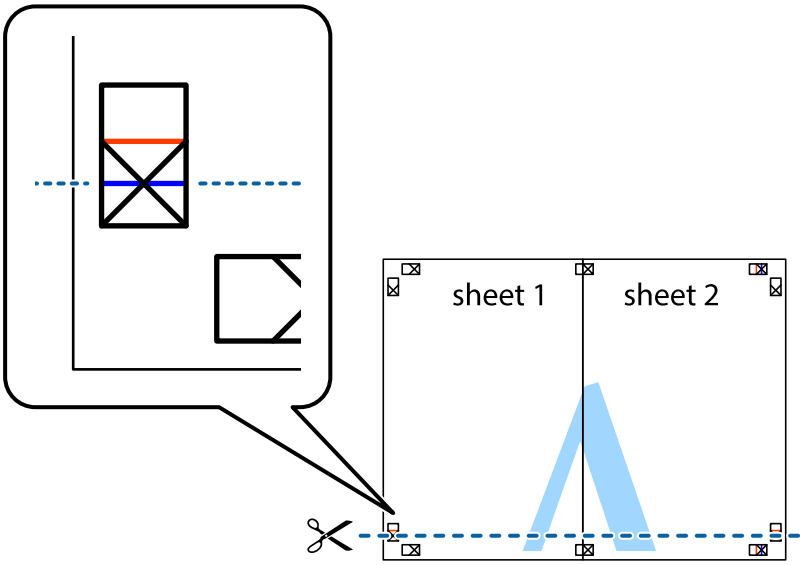

7. Place the edge of Sheet 1 and Sheet 2 on top of Sheet 3 and Sheet 4 and align the cross marks, and then temporarily tape them together from the back.

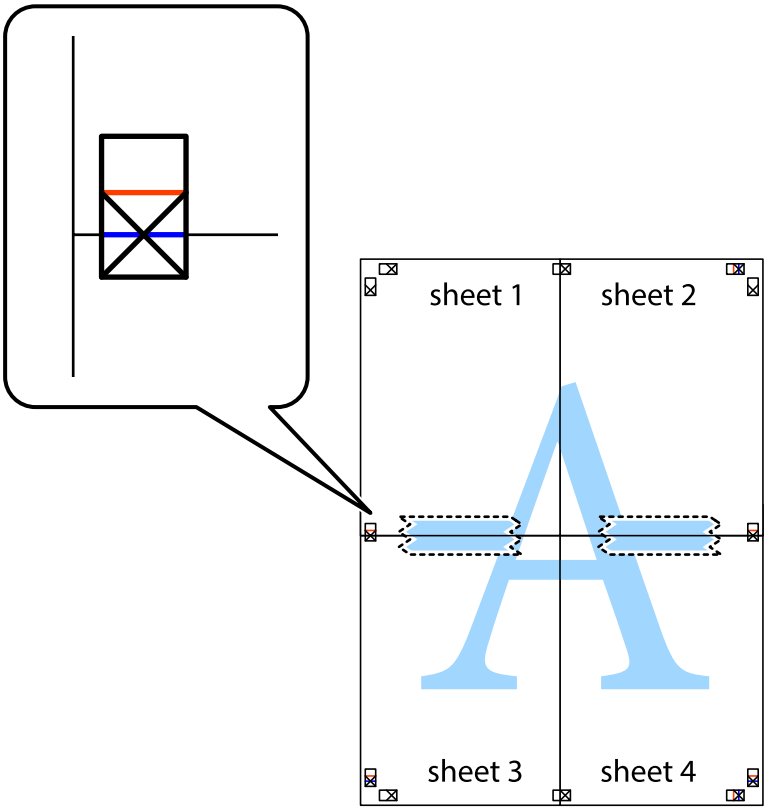

8. Cut the taped sheets in two along the horizontal red line through the alignment markers (this time, the line above the cross marks).

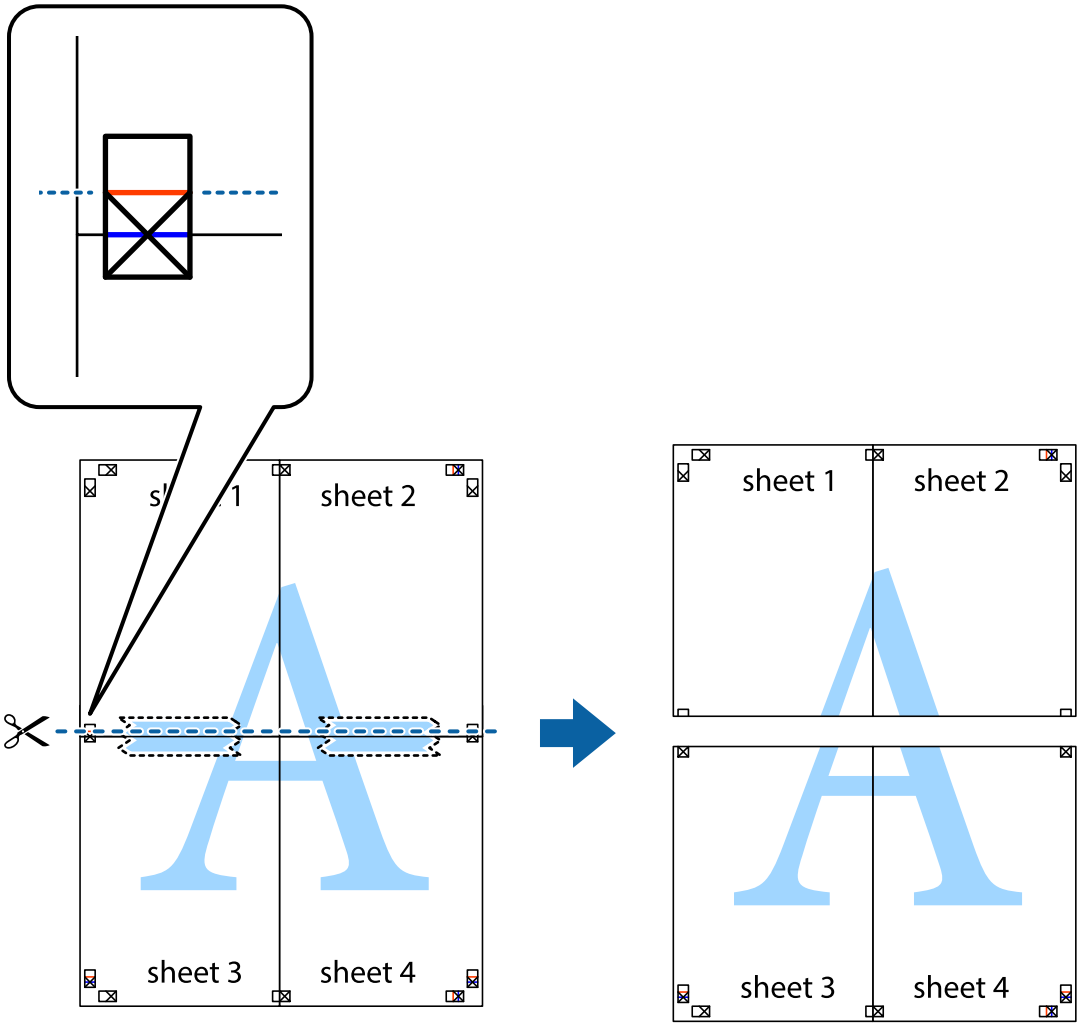

9. Tape the sheets together from the back.

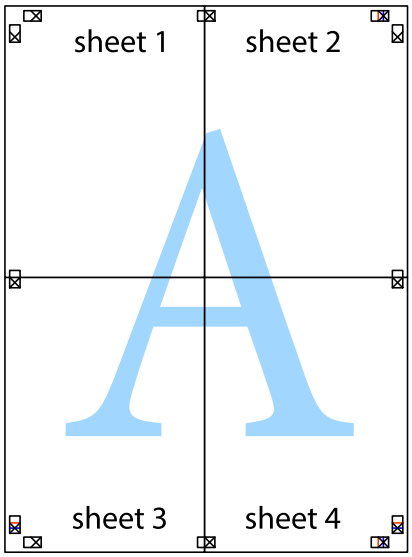

10. Cut off the remaining margins along the outer guide.

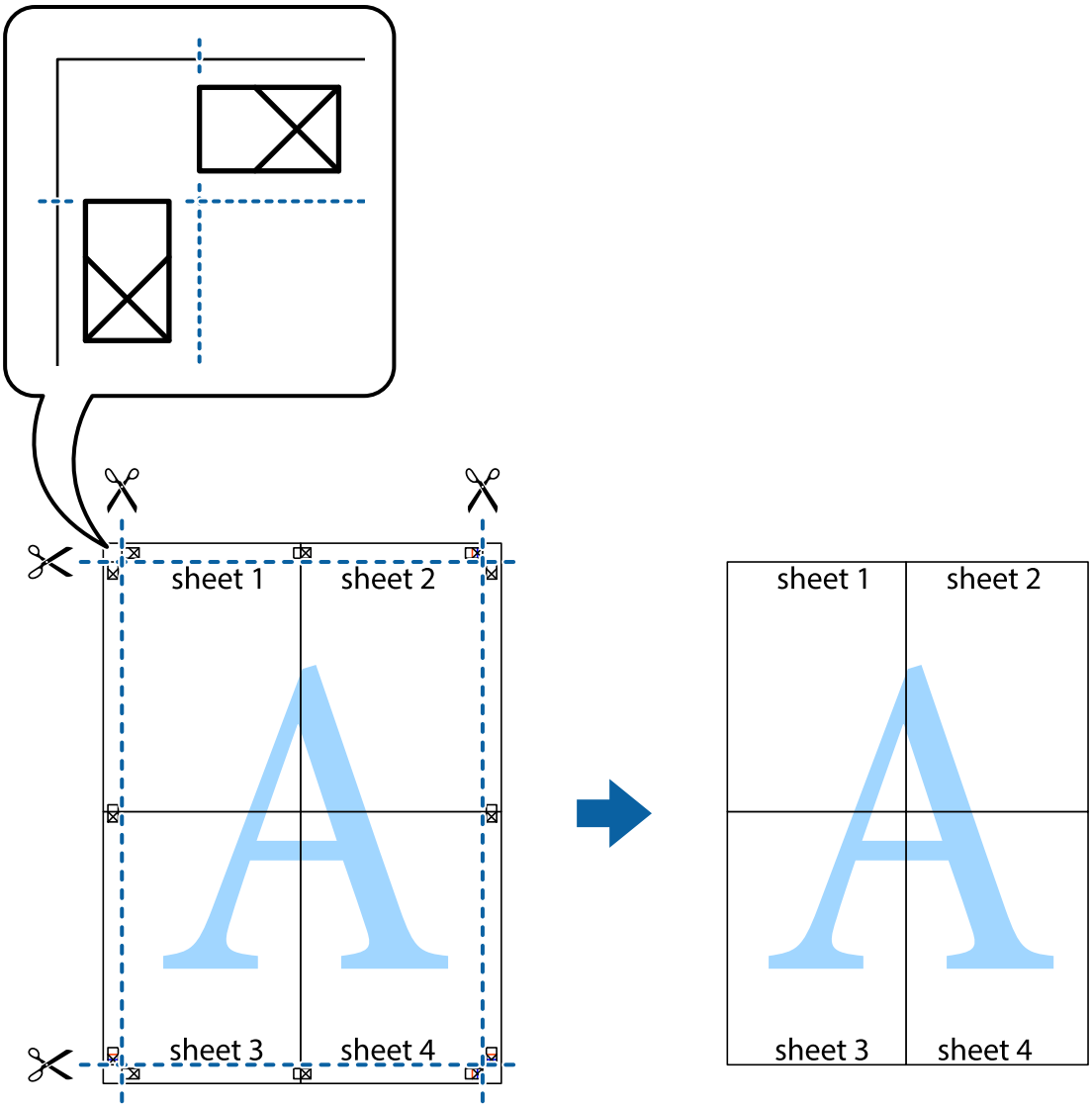

Printing with a Header and Footer

You can print information such as a user name and printing date in headers or footers.

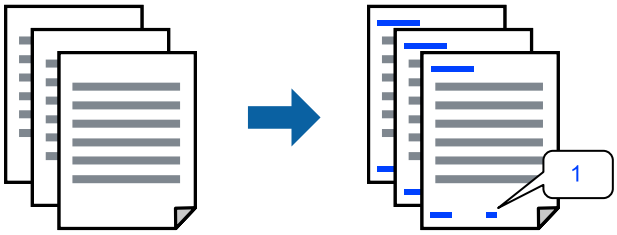

Access the printer driver, and then select the following settings.

More Options tab > **Watermark Features** > **Header/Footer**

Printing an Anti-Copy Pattern

You can print an anti-copy pattern on your printouts. When printing, the letters themselves are not printed and the entire print is screen-toned lightly. The hidden letters appear when photocopied to easily distinguish the original from the copies.

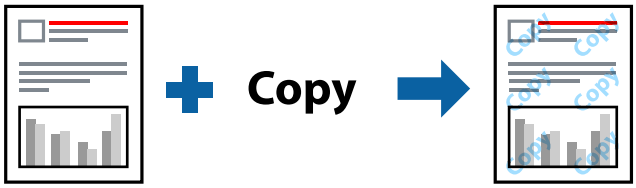

This feature is available when the printer settings are configured as follows:

- ❏ Paper Type: Plain paper
- ❏ Quality: Standard
- ❏ Borderless: Not selected
- ❏ Color Correction: Automatic

Access the printer driver, and then select the following settings.

More Options tab > **Watermark Features** > **Anti-Copy Pattern**

Printing a Watermark

You can print a watermark such as "Confidential" on your printouts. You can also add your own watermark.

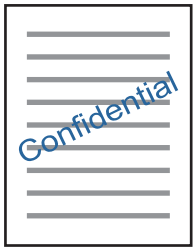

Note:
This feature is not available with borderless printing.

Access the printer driver, and then select the following settings.

More Options tab > **Watermark Features** > **Watermark**

Printing Multiple Files Together

Job Arranger Lite allows you to combine several files created by different applications and print them as a single print job. You can specify the print settings for combined files, such as multi-page layout, and 2-sided printing.

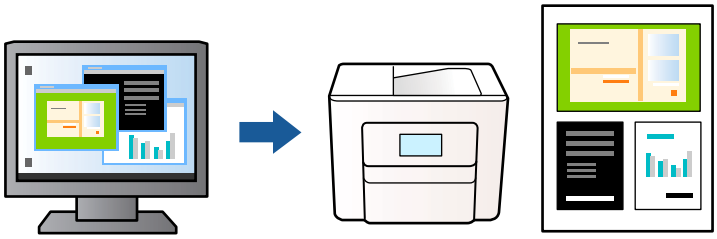

1. On the printer driver's **Main** tab, select **Job Arranger Lite**, and then click **OK**.
2. Click **Print**.

   When you start printing, the Job Arranger Lite window is displayed.
3. With the Job Arranger Lite window opened, open the file that you want to combine with the current file, and then repeat the above steps.
4. When you select a print job added to Print Project in the Job Arranger Lite window, you can edit the page layout.
5. Click **Print** from the **File** menu to start printing.

   Note:
   *If you close the Job Arranger Lite window before adding all the print data to the Print Project, the print job you are currently working on is canceled. Click **Save** from the **File** menu to save the current job. The extension of the saved files is "ecl".*

   *To open a Print Project, click **Job Arranger Lite** on the printer driver's **Maintenance** tab to open the Job Arranger Lite window. Next, select **Open** from the **File** menu to select the file.*

Printing Using the Color Universal Print Feature

You can enhance the visibility of texts and images in printouts.

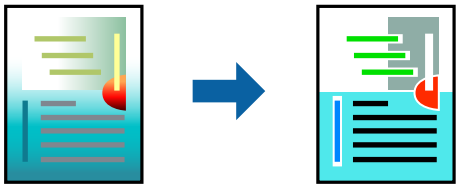

Color Universal Print is only available when all of the following conditions are met.

- ❏ Paper Type: Plain paper
- ❏ Quality: Standard or a higher quality
- ❏ Color: Color
- ❏ Applications: Microsoft® Office 2007 or later
- ❏ Text Size: 96 pts or smaller

Access the printer driver, and then select the following settings.

More Options tab > **Color Correction** > **Image Options** > **Color Universal Print**

Adjusting the Print Color

You can adjust the colors used in the print job. These adjustments are not applied to the original data.

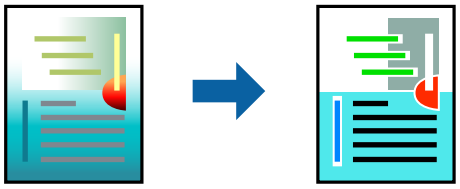

Access the printer driver, and then select the following settings.

More Options tab > **Color Correction** > **Custom** > **Advanced**, etc.

Printing to Emphasize Thin Lines

You can thicken thin lines that are too thin to print.

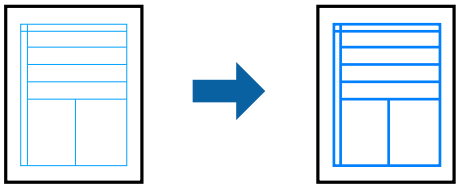

Access the printer driver, and then select the following settings.

More Options tab > **Color Correction** > **Image Options** > **Emphasize Thin Lines**

Printing Clear Bar Codes

If printed bar codes cannot be read correctly, you can print them more clearly by reducing the ink bleeding. Only enable this feature if the bar code you printed cannot be scanned. Deblurring may not always be possible depending on the circumstances.

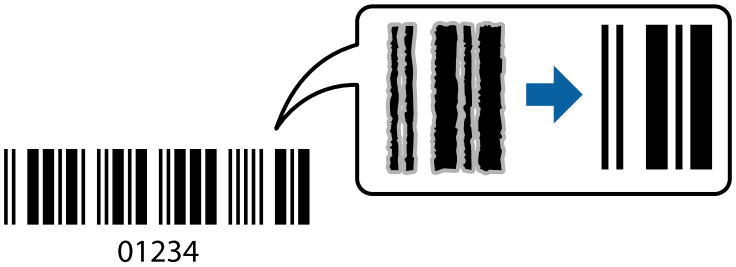

You can use this feature for the following paper types and print quality.

❏ Paper Type: Plain paper or Envelope

❏ Quality: Standard

Access the printer driver, and then select the following settings.

Maintenance tab > **Extended Settings** > **Barcode mode**

Printing Documents from Mobile Devices

You can print documents from a mobile device.

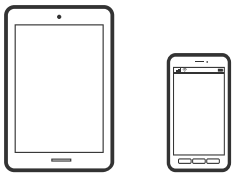

Printing Using Epson Smart Panel

Epson Smart Panel is an application that allows you to perform printer operations easily including printing, copying, or scanning from a mobile device. You can connect the printer and mobile device over a wireless network, check the ink levels and printer status, and check for solutions if an error occurs. You can also copy easily by registering a copy favorite.

Install Epson Smart Panel from the following URL or QR code.

https://support.epson.net/smpdl/

Start Epson Smart Panel, and then select the print menu on the home screen.

Printing Documents Using AirPrint

AirPrint enables instant wireless printing from iPhone, iPad, iPod touch, and Mac without the need to install drivers or download software.

Works with Apple AirPrint

Note:
If you disabled paper configuration messages on your printer control panel, you cannot use AirPrint. See the link below to enable the messages, if necessary.

1. Set up your printer for wireless printing. See the link below.

   U.S. and Canada

   "Resetting the Network Connection" on page 127

   Other Regions

   https://epson.sn

2. Connect your Apple device to the same wireless network that your printer is using.

3. Print from your device to your printer.

   Note:
   For details, see the AirPrint page on the Apple website.

Related Information

➡ "Cannot Print Even Though a Connection has been Established (iOS)" on page 155

Printing Using Mopria Print Service

Mopria Print Service enables printing to Mopria certified printers and multifunction printers from many manufacturers. Mobile printing from your Android phone or tablet may be accomplished using the Mopria Print Service app in the Google Play Store.

For more details, access the Mopria Web site at https://mopria.org.

Printing Using Epson Print Enabler

You can wirelessly print your documents, emails, photos, and web pages right from your Android smartphone or tablet (Android v7.0 or later). With a few taps, your Android device will discover an Epson printer that is connected to the same wireless network.

Search for and install Epson Print Enabler from Google Play.

Go to **Settings** on your Android device, select **Printing**, and then enable Epson Print Enabler. From an Android application such as Chrome, tap the menu icon and print whatever is on the screen.

Note:
*If you do not see your printer, tap **All Printers** and select your printer.*

Printing on Envelopes

Printing on Envelopes from a Computer (Windows)

1. Load envelopes in the printer.
   "Loading Envelopes" on page 34
2. Open the file you want to print.
3. Access the printer driver window.
4. Select the envelope size from **Document Size** on the **Main** tab, and then select **Envelope** from **Paper Type**.
5. Select other settings on the **Main** and **More Options** tabs as necessary, and then click **OK**.
6. Click **Print**.

Printing on Envelopes from a Computer (Mac OS)

1. Load envelopes in the printer.
   "Loading Envelopes" on page 34
2. Open the file you want to print.
3. Select **Print** from the **File** menu or another command to access the print dialog.
4. Select the size as the **Paper Size** setting.
5. Select **Print Settings** from the pop-up menu.
6. Select **Envelope** as the **Media Type** setting.
7. Set the other items as necessary.
8. Click **Print**.

Printing Web Pages

Printing Web Pages from a Computer

Epson Photo+ allows you to display web pages, crop to a specified area, and then edit and print them. See the application's help for details.

Related Information

➡ "Software Information" on page 229

Printing Web Pages from Mobile Devices

Install Epson Smart Panel from the following URL or QR code.

https://support.epson.net/smpdl/

Open the web page you want to print in your web browser app. Tap **Share** from the menu of the web browser application, select **Smart Panel**, and then start printing.

Printing Using a Cloud Service

By using Epson Connect service available on the Internet, you can print from your smartphone, tablet PC, or laptop, anytime and practically anywhere. To use this service, you need to register the user and the printer in Epson Connect.

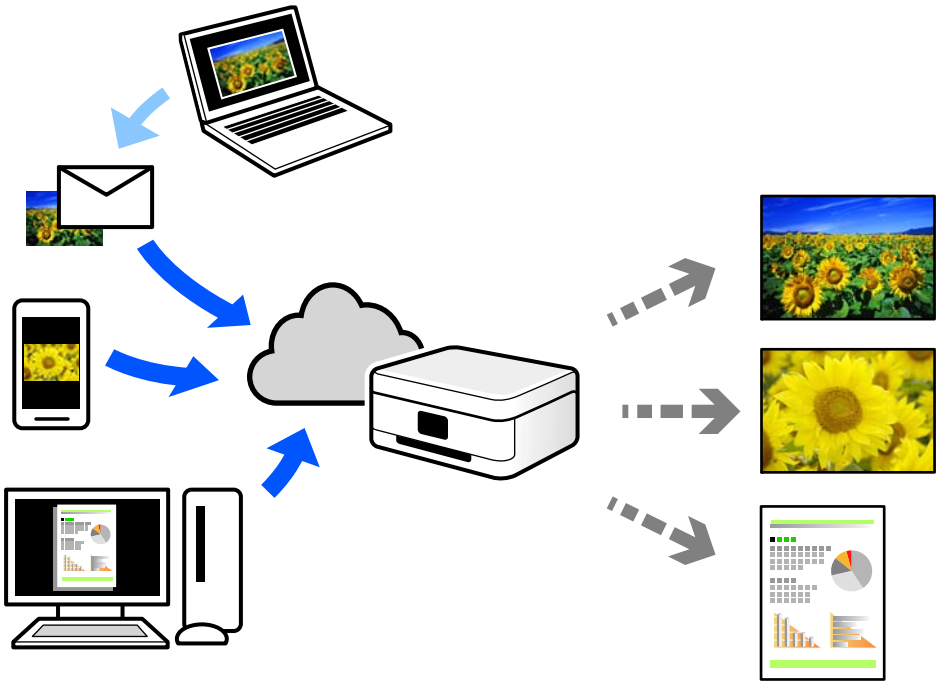

The features available on the Internet are as follows.

❏ Email Print

When you send an email with attachments such as documents or images to an email address assigned to the printer, you can print that email and the attachments from remote locations such as your home or office printer.

❏ Epson Smart Panel

This Application is for iOS and Android, and allows you to print or scan from a smartphone or tablet. You can print documents, images, and web sites by sending them directly to a printer on the same wireless LAN.

❏ Remote Print Driver

This is a shared driver supported by Remote Print Driver. When printing using a printer in a remote location, you can print by changing the printer on the usual applications window.

See the Epson Connect web portal for details on how to setup or print.

https://epson.com/connect (U.S.)

https://epson.ca/connect (Canada)

https://latin.epson.com/connect (Latin America)

https://www.epsonconnect.eu (Europe)

https://www.epsonconnect.ae (Middle East, Turkey, Africa, Central and West Asia)

https://www.epsonconnect.com (Other regions)

Copying

Available Copying Methods. 62

Menu Options for Copying. 66

More Menu Options for Copying. 66

Available Copying Methods

Place the originals on the scanner glass or the ADF, and then select the **Copy** menu on the home screen.

Copying Originals

This section explains the steps for copying originals in color or monochrome.

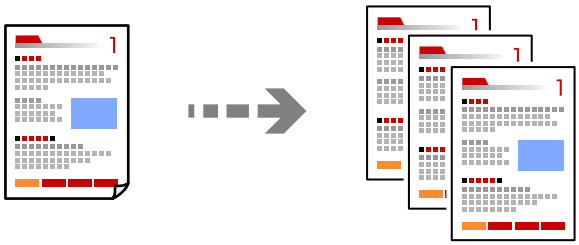

1. Load paper in the printer.

   "Loading Paper in the Rear Paper Feeder" on page 32

2. Place the originals.

   If you want to copy multiple originals, place all of the originals on the ADF.

   "Placing Originals on the Scanner Glass" on page 38

   "Placing Originals on the ADF" on page 37

3. Select **Copy** on the home screen.

   To select an item, use the ◀▶ buttons, and then press the OK button.

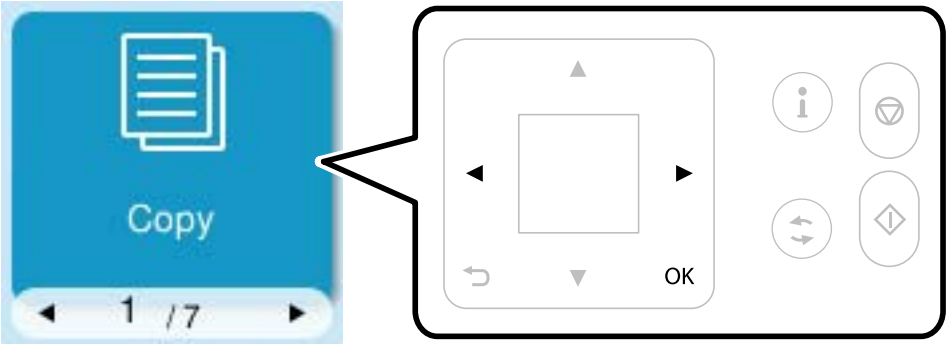

4. Select **Color** or **B&W**.

   To select an item, use the ◀▶ buttons, and then press the OK button.

5. Set the number of copies as necessary.

6. Press the ⊡ button.

   Note:
   The color, size, and border of the copied image are slightly different from the original.

Copying by Enlarging or Reducing

You can copy originals at a specified magnification.

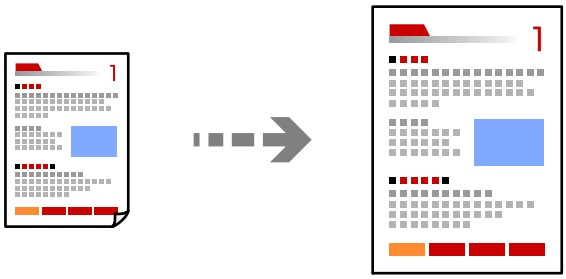

Select the following settings on the LCD screen.

Copy > **More** > **Print Settings** > **Settings** > **Reduce/Enlarge**

Related Information

➡ "More Menu Options for Copying" on page 66

Copying Multiple Originals onto One Sheet

You can copy the multiple originals onto a single sheet.

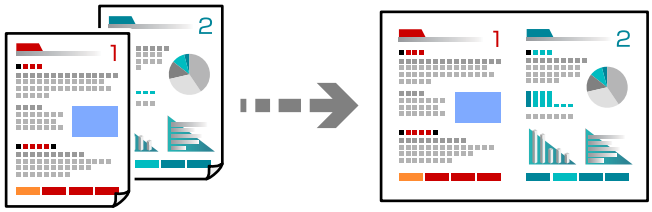

Select the following settings on the LCD screen.

Copy > **2-upColor**

When placing originals, place them face-down as shown below.

❏ Copying originals horizontally

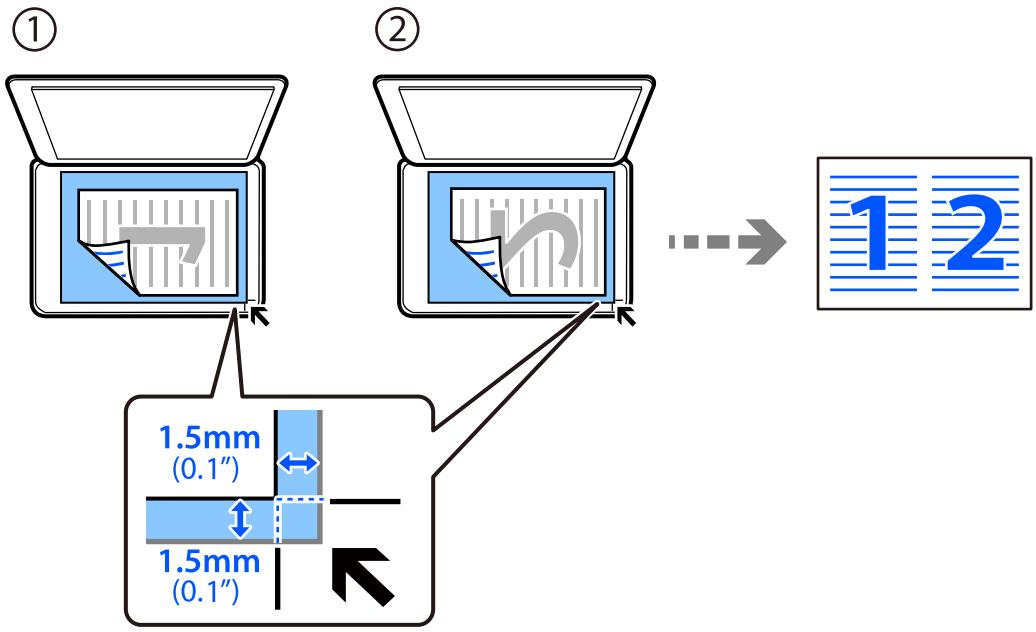

❏ Copying originals vertically

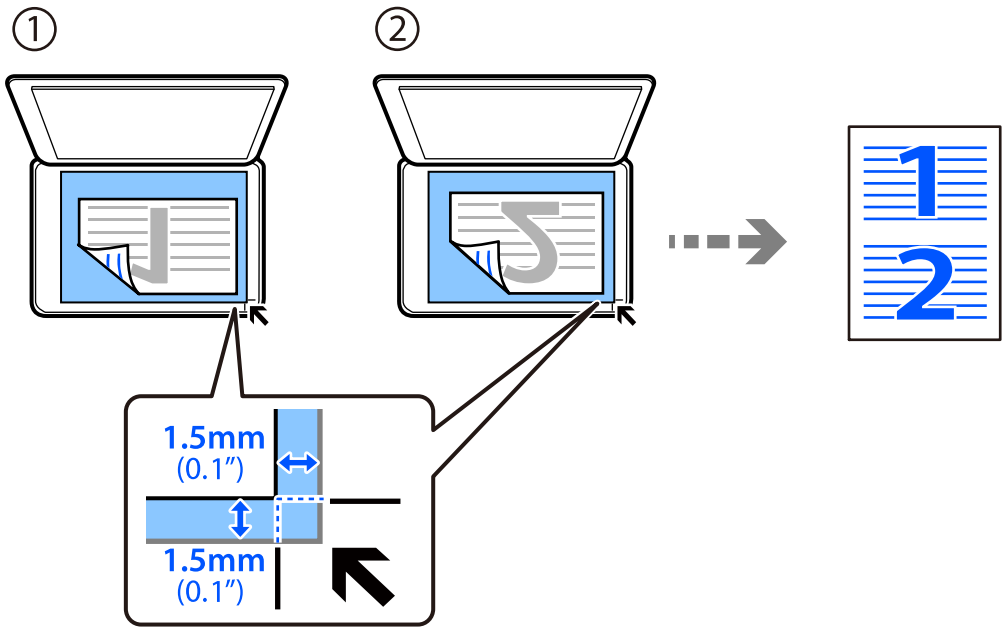

Note:
*You can also select **More** to change the settings. See the related information below for explanations of the settings.*

Related Information

➡ "More Menu Options for Copying" on page 66

Copying ID card

You can scan both sides of an ID card and copy it onto one side of Letter or A4 size paper.

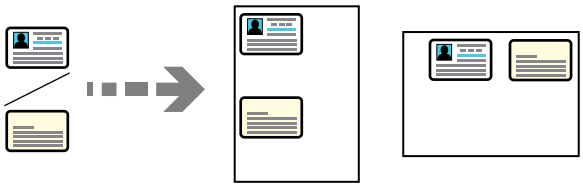

Select the following settings on the LCD screen.

Copy > **More** > **Print Settings** > **Settings** > **ID Card Copy**

Place the original face-down and slide it to the corner mark. Place an ID card 5 mm (0.2 in.) away from the corner mark of the scanner glass.

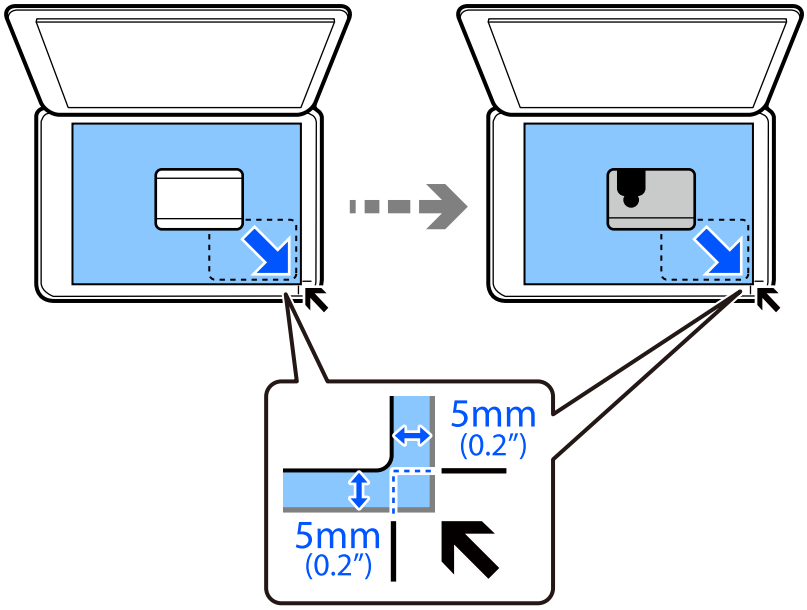

Related Information

➡ "More Menu Options for Copying" on page 66

Copying Without Margins

Copies without margins around the edges. The image is enlarged a little to remove margins from the edges of the paper.

Select the following settings on the LCD screen.

Copy > **More** > **Print Settings** > **Settings** > **Borderless Copy**

Menu Options for Copying

You can access these settings by selecting **Copy** > **More** on the LCD screen.

The number of copies:

Enter the number of copies.

Color Mode:

Select whether to copy in color or in monochrome.

❏ B&W

Copies the original in black and white (monochrome).

❏ Color

Copies the original in color.

More Menu Options for Copying

You can access these settings by selecting **Copy** > **More** > **Print Settings** > **Settings** on the LCD screen.

Density:

Increase the level of density when the copying results are faint. Decrease the level of density when ink smears.

Paper Setting:

Select the paper size and the paper type you loaded.

Reduce/Enlarge:

Configures the magnification ratio for enlargement or reduction. Select the magnification from the menu according to the paper and original you want to print.

Auto Fit :

Detects the scan area and automatically enlarges or reduces the original to fit to the paper size you selected.

Original Size:

Select the size of your original. When copying non-standard size originals, select the size closest to your original.

Multi-Page:

Select the copy layout.

❏ Single Page

Copies a single-sided original onto a single sheet.

❏ 2-up

Copies two single-sided originals onto a single sheet in 2-up layout. Select the layout order and the orientation of your original.

Quality:

Select the quality for copying. Selecting **High** provides higher quality printing, but the printing speed may be slower.

ID Card Copy:

Select to scan both sides of an ID card and copies onto one side of a paper.

Borderless Copy:

Select to copy without margins around the edges. The image is enlarged a little to remove margins from the edges of the paper. Select how much to enlarge in the **Expansion** setting.

Clear All Settings:

Select to reset the copy settings to their defaults.

Scanning

Basic Information on Scanning. 69

Scanning Originals to a Computer. 73

Scanning Using WSD. 75

Scanning Using Mopria Scan. 76

Scanning Originals to a Mobile Device. 76

Advanced Scanning. 76

Basic Information on Scanning

What is a "Scan"?

A "scan" is the process of converting the optical information on paper (such as documents, magazine clippings, photos, and handwritten illustrations) into digital image data.

You can save scanned data as a digital image such as a JPEG or PDF.

You can then print the image, send it by email, or share the image in other ways.

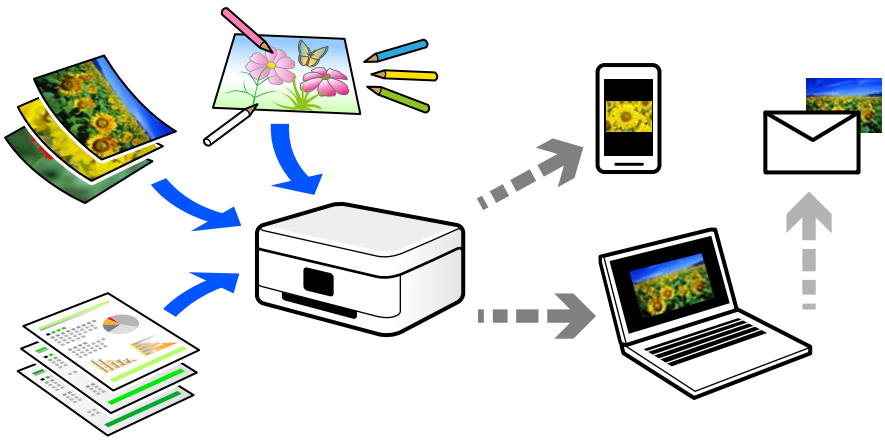

Scanning Uses

You can use scanning in a variety of ways to make your life more convenient.

- ❏ By scanning a paper document and turning it into digital data, you can read it on a computer or a mobile device.
- ❏ By scanning tickets or flyers into digital data, you can dispose of the originals and reduce clutter.
- ❏ By scanning important documents, you can back them up to cloud services or another storage medium, just in case they get lost.
- ❏ You can send the scanned photos or documents to friends by email.
- ❏ By scanning hand-drawn illustrations, you can share them on social media at a much higher quality than by just taking a photo on your mobile device.
- ❏ By scanning your favorite pages from newspapers or magazines, you can save them and dispose of the originals.

Available Scanning Methods

You can use any of the following methods to scan using this printer.

Scanning to a Computer

There are two methods of scanning originals to a computer; scanning using the printer's control panel, and scanning from the computer.

You can scan easily from the control panel.

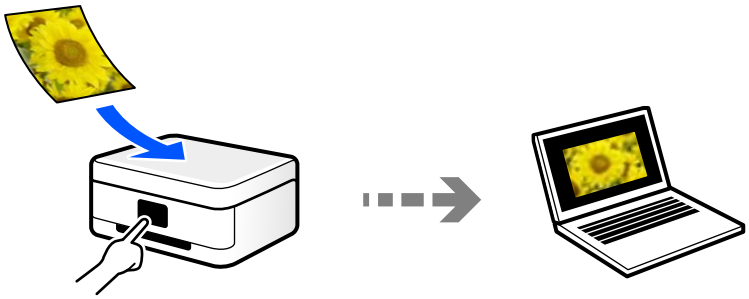

Use the scanning application Epson ScanSmart to scan from the computer. You can edit images after scanning.

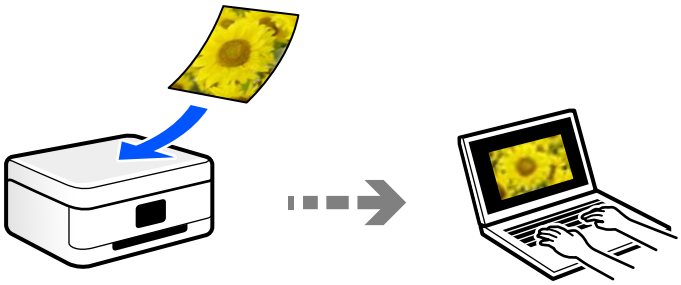

Scanning Using WSD

You can save the scanned image to a computer connected to the printer, using the WSD feature.

If you are using Windows 7, you need to select WSD settings on your computer before scanning.

Setting Up a WSD Port

This section explains how to set up a WSD port for Windows 7.

Note:
For Windows 8 or later, the WSD port is set up automatically.

The following is necessary to set up a WSD port.

❏ The printer and the computer are connected to the network.

❏ The printer driver is installed on the computer.

1. Turn the printer on.

2. Click start, and then click **Network** on the computer.

3. Right-click the printer, and then click **Install**.

   Click **Continue** when the **User Account Control** screen is displayed.

Click **Uninstall** and start again if the **Uninstall** screen is displayed.

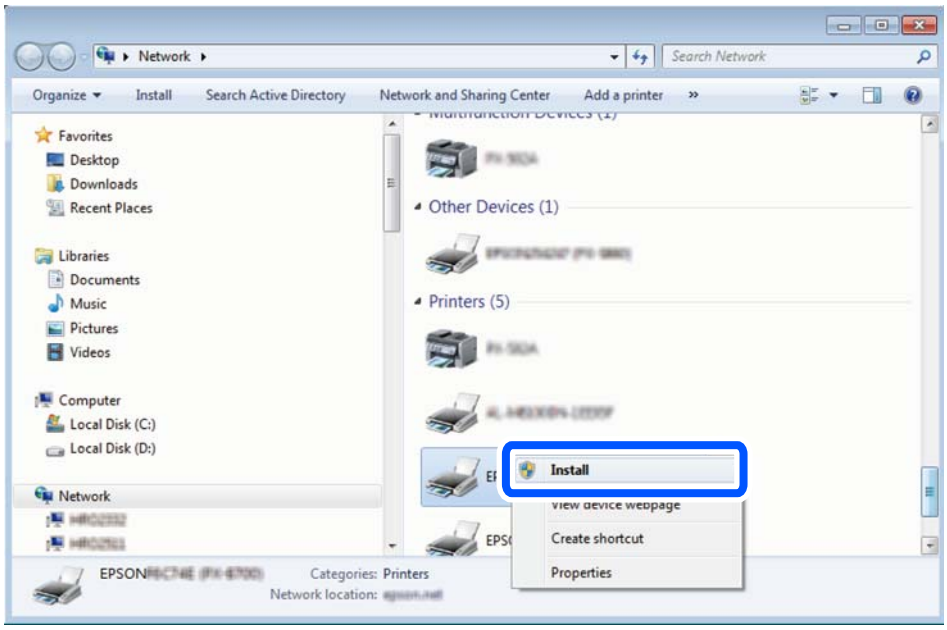

Note:
The printer name you set on the network and model name (EPSON XXXXXX (XX-XXXX)) are displayed on the network screen. You can check the printer's name set on the network from the printer's control panel or by printing a network status sheet.

4. Click **Your device is ready to use**.

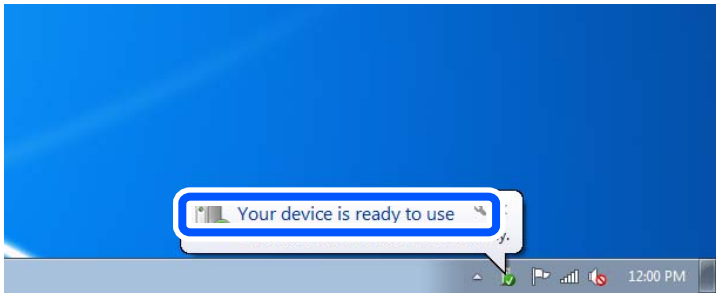

5. Check the message, and then click **Close**.

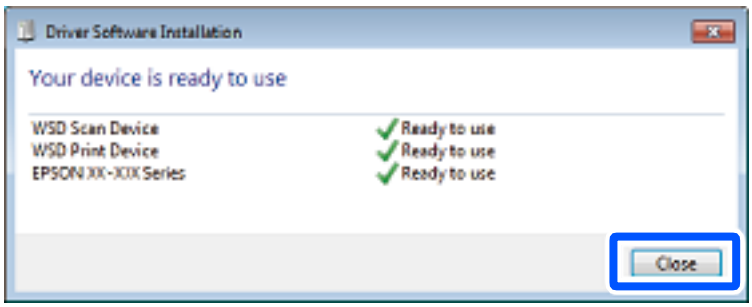

6. Open the **Devices and Printers** screen.

   Click start > **Control Panel** > **Hardware and Sound** (or **Hardware**) > **Devices and Printers**.

7. Check that an icon with the printer's name on the network is displayed.

   Select the printer name when using with WSD.

Scanning Directly from Mobile Devices

You can save scanned images directly to a mobile device by using the Epson Smart Panel application.

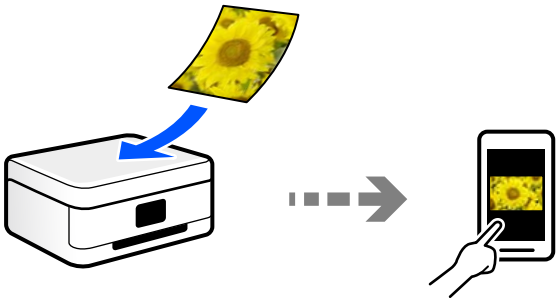

Recommended File Formats

Generally speaking, the JPEG format is suitable for photos while the PDF format is suitable for documents.

See the following descriptions to choose the best format for what you want to do.

File Format	Description
JPEG (.jpg)	A file format that allows you to compress the data to be saved. If the compression ratio is high, the image quality declines, and you cannot convert the image back to the original quality. This is the standard image format for digital cameras. This format is suitable for images that have many colors.
PDF (.pdf)	A general file format that can be used across different operating systems and provides the same level of screen display and print result. Also, you can save multiple scans as a one file. You can view PDF files using dedicated PDF reading software or in web browsers.

Recommended Resolutions

Resolution indicates the number of pixels (smallest area of an image) for each inch (25.4 mm), and is measured in dpi (dots per inch). The advantage of increasing the resolution is that the details in the image improve. However, it can also have the following disadvantages.

❏ The file size becomes large

(When you double the resolution, the file size becomes about four times larger.)

❏ Scanning, saving, and reading the image takes a long time

❏ Sending and receiving emails or faxes takes a long time

❏ The image becomes too large to fit the display or print on the paper

See the table and set the appropriate resolution for the purpose of your scanned image.

Purpose	Resolution (Reference)
Displaying on a computer Sending by email	Up to 200 dpi
Printing Sending by fax	200 to 300 dpi

Scanning Originals to a Computer

There are two methods of scanning originals to a computer; scanning using the printer's control panel, and scanning from the computer.

Scanning from the Control Panel

To use this feature, make sure the following applications are installed on your computer.

OS	Application Required for Use	Checking for Installed Applications
Windows 11	❑ Epson ScanSmart ❑ Epson Scan 2	Click the start button, and then check the **All apps** > **Epson Software** folder > **Epson ScanSmart**, and the **EPSON** folder > **Epson Scan 2**.
Windows 10	❑ Epson ScanSmart ❑ Epson Scan 2	Click the start button, and then check the **Epson Software** folder > **Epson ScanSmart**, and the **EPSON** folder > **Epson Scan 2**.
Windows 8.1 / Windows 8	❑ Epson ScanSmart ❑ Epson Scan 2	Enter the application name in the search charm, and then check the displayed icon.
Windows 7	❑ Epson ScanSmart ❑ Epson Scan 2	Click the start button, and then select **All Programs**. Next, check the **Epson Software** folder > **Epson ScanSmart**, and the **EPSON** folder > **Epson Scan 2**.
OS X El Capitan (10.11) or later	❑ Epson ScanSmart ❑ Epson Scan 2	Select **Go** > **Applications** > **Epson Software**.
OS X Yosemite (10.10) / OS X Mavericks (10.9.5)	❑ Epson Event Manager ❑ Epson Scan 2	Select **Go** > **Applications** > **Epson Software**.

If the application is not installed, download and install it from the Epson website.

https://epson.com

Note:
For Windows Server operating systems, you can not use this feature.

1. Place the originals.

   "Placing Originals" on page 36

2. Select **Scan to Computer** on the control panel.

   To select an item, use the ◀▶ buttons, and then press the OK button.

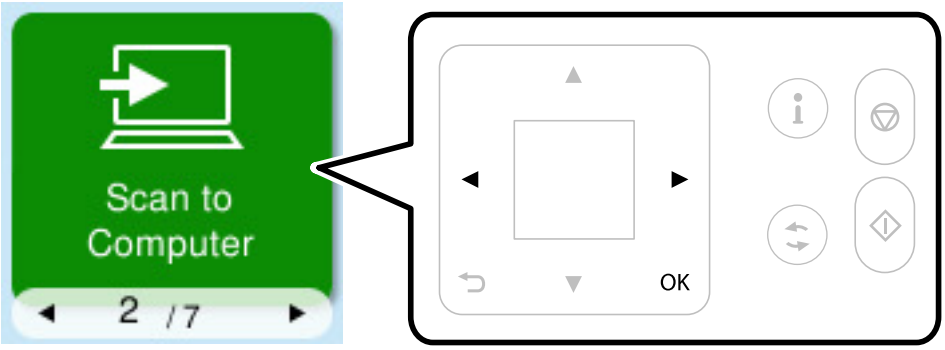

3. Select how to save the scanned image to a computer.
   - ❑ Preview on Computer (Windows, or OS X El Capitan (10.11) or later): Previews the scanned image on a computer before saving images.
   - ❑ Save as JPEG: Saves the scanned image in JPEG format.
   - ❑ Save as PDF: Saves the scanned image in PDF format.

4. If the **Select Computer** screen is displayed, select a computer on which to save the scanned images.

5. Press the ⊡ button.

When using Windows, or OS X El Capitan (10.11) or later: Epson ScanSmart automatically starts on your computer, and scanning starts.

Note:
- ❑ *See the Epson ScanSmart help for details on using the software. Click **Help** on the Epson ScanSmart screen to open the help.*
- ❑ *The color, size, and border of the scanned image will not be exactly the same as the original.*

Scanning from a Computer

You can scan from a computer by using Epson ScanSmart.

This application allows you to scan documents and photos easily, and then save the scanned images in simple steps.

Note:
Windows Server operating systems are not supported.

1. Place the originals.

   "Placing Originals" on page 36

2. Start Epson ScanSmart.
   - ❑ Windows 11

     Click the start button, and then select **All apps** > **Epson Software** > **Epson ScanSmart**.
   - ❑ Windows 10

     Click the start button, and then select **Epson Software** > **Epson ScanSmart**.

❏ Windows 8.1/Windows 8

Enter the application name in the search charm, and then select the displayed icon.

❏ Windows 7

Click the start button, and then select **All Programs** > **Epson Software** > **Epson ScanSmart**.

❏ Mac OS

Select **Go** > **Applications** > **Epson Software** > **Epson ScanSmart**.

3. When the Epson ScanSmart screen is displayed, follow the on-screen instructions to scan.

Note:
*Click **Help** to view detailed operation information.*

Scanning Using WSD

You can save the scanned image to a computer connected to the printer, using WSD feature.

❏ This feature is only available for computers running Windows 7 or later (English only).

❏ If you are using Windows 7, you need to setup your computer in advance using this feature.
"Setting Up a WSD Port" on page 70

1. Place the originals.
"Placing Originals" on page 36

2. Select **To WSD** on the control panel.

To select an item, use the ◀▶ buttons, and then press the OK button.

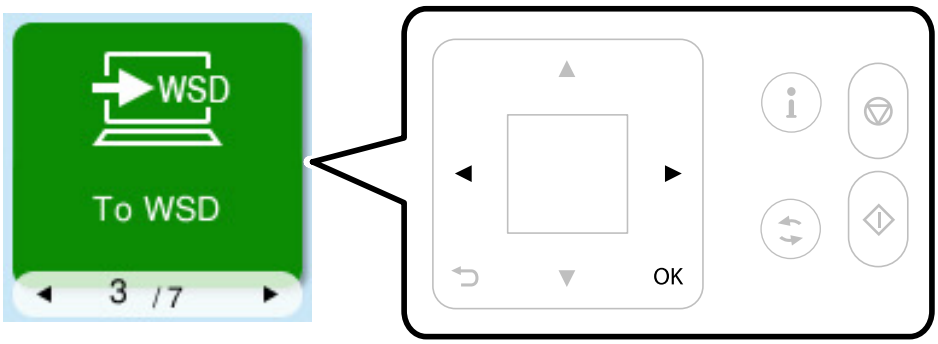

3. Select a computer.

4. Press the ⊡ button.

Scanning Using Mopria Scan

Mopria Scan enables scanning from Mopria certified multifunction printers and scanners from many manufacturers. Mobile scanning from your Android phone or tablet may be accomplished using the Mopria Scan app in the Google Play Store.

For more details, access the Mopria Web site at https://mopria.org.

Scanning Originals to a Mobile Device

Note:
Before scanning, install Epson Smart Panel on your mobile device.

1. Place the originals.

   "Placing Originals" on page 36

2. Start Epson Smart Panel on your mobile device.

3. Select scan menu on the home screen.

4. Follow the on-screen instructions to scan and save the images.

Advanced Scanning

Scanning Multiple Photos at the Same Time

Using Epson ScanSmart, you can scan multiple photos at the same time and save each image individually.

Note:
Windows Server operating systems are not supported.

1. Place the photos on the scanner glass. Place them 4.5 mm (0.2 in.) away from the horizontal and vertical edges of the scanner glass, and place them at least 20 mm (0.8 in.) away from each other.

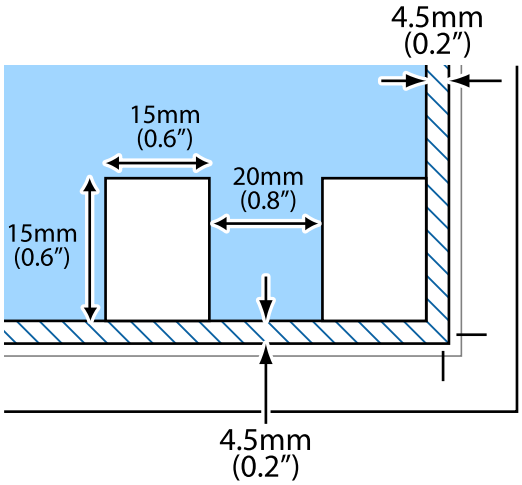

Note:
The photos should be larger than 15×15 mm (0.6×0.6 in.).

2. Start Epson ScanSmart.
   - ❏ Windows 11
     Click the start button, and then select **All apps** > **Epson Software** > **Epson ScanSmart**.
   - ❏ Windows 10
     Click the start button, and then select **Epson Software** > **Epson ScanSmart**.
   - ❏ Windows 8.1/Windows 8
     Enter the application name in the search charm, and then select the displayed icon.
   - ❏ Windows 7
     Click the start button, and then select **All Programs** > **Epson Software** > **Epson ScanSmart**.
   - ❏ Mac OS
     Select **Go** > **Applications** > **Epson Software** > **Epson ScanSmart**.
3. When the Epson ScanSmart screen is displayed, follow the on-screen instructions to scan.

Scanned photos are saved as individual images.

Faxing

Before Using Fax Features. 79

Overview of this Printer's Fax Features. 90

Sending Faxes Using the Printer. 93

Receiving Faxes on the Printer. 96

Menu Options for Faxing. 99

Using Other Faxing Features. 101

Sending a Fax from a Computer. 102

Receiving Faxes on a Computer. 106

Before Using Fax Features

Faxing is only available for the ET-4900 Series/L5390 Series.

Confirm the following before you start using the fax features.

❏ The printer and the phone line, and any external phone device (if it is being used) are connected correctly

❏ Fax basic settings (Fax Setting Wizard) is selected

❏ Other necessary Fax Settings are selected

See "Related Information" below to select settings.

Related Information

➡ "Connecting the Printer to a Phone Line" on page 79
➡ "Preparing the Printer to Send and Receive Faxes" on page 82
➡ "Configuring the Printer's Fax Features" on page 84
➡ "Fax Settings" on page 240
➡ "Making Contacts Available" on page 87
➡ "User Default Settings Menu" on page 245

Connecting the Printer to a Phone Line

Compatible Telephone Lines

You can use the printer over standard analog telephone lines (PSTN = Public Switched Telephone Network) and PBX (Private Branch Exchange) telephone systems.

You may not be able to use the printer with the following phone lines or systems.

❏ VoIP phone lines such as DSL or fiber-optic digital service

❏ Digital phone lines (ISDN)

❏ Some PBX telephone systems

❏ Systems where adapters such as terminal adapters, VoIP adapters, splitters, or DSL router are connected between the telephone wall jack and the printer

Related Information

➡ "Connecting the Printer to a Phone Line" on page 79

Connecting the Printer to a Phone Line

Connect the printer to a phone device wall jack using an RJ-11 (6P2C) phone cable. When connecting a phone device to the printer, use a second RJ-11 (6P2C) phone cable.

Depending on the area, a phone cable may be included with the printer. If it is included, use that cable.

You may need to connect the phone cable to an adapter provided for your country or region.

Note:
Remove the cap from the EXT. port of the printer only when connecting your phone device to the printer. Do not remove the cap if you are not connecting your phone device.

In areas where lightning strikes occur frequently, we recommend that you use a surge protector.

Connecting to a Standard Phone Line (PSTN) or PBX

Connect a phone cable from the telephone wall jack or PBX port to the LINE port on the back of the printer.

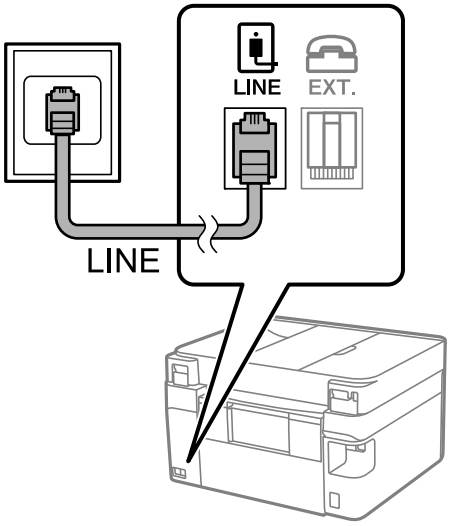

Related Information

➡ "Connecting Your Phone Device to the Printer" on page 81

Connecting to DSL or ISDN

Connect a phone cable from the DSL modem or the ISDN terminal adapter to the LINE port on the back of the printer. See the documentation provided with the modem or the adapter for more details.

Note:
If your DSL modem is not equipped with a built-in DSL filter, connect a separate DSL filter.

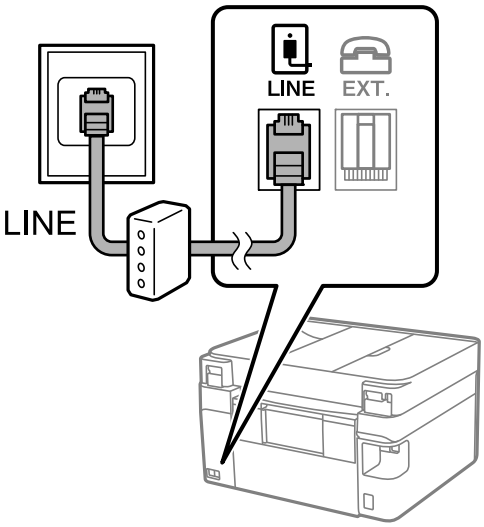

Related Information

➡ "Connecting Your Phone Device to the Printer" on page 81

Connecting Your Phone Device to the Printer

When using the printer and your phone device on a single phone line, connect the phone device to the printer.

Note:

- ❏ *If your phone device has a fax function, disable the fax function before connecting. See the manuals that came with the phone device for details. If the fax function cannot be completely disabled, you may not be able to use your phone device as an external phone.*
- ❏ *If you connect an answering machine, make sure the printer's **Rings to Answer** setting is set higher than the number of rings for the answering machine.*

1. Remove the cap from the EXT. port on the back of the printer.

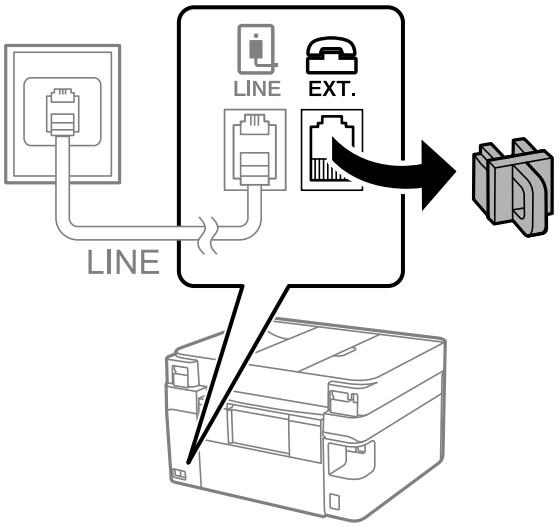

2. Connect the phone device and the EXT. port with a phone cable.

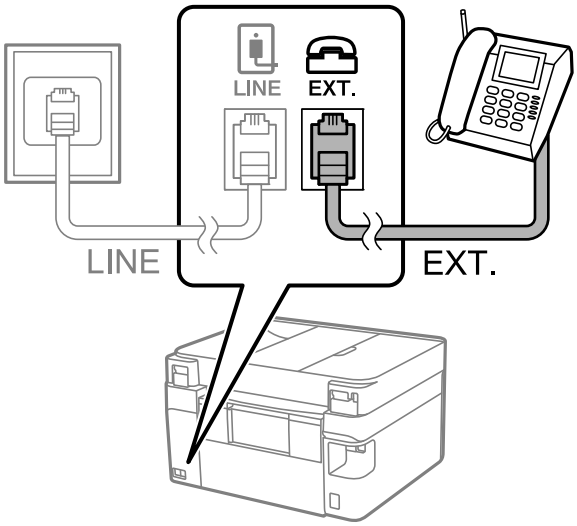

Note:
When sharing a single phone line, make sure you connect the phone device to the EXT. port of the printer. If you split the line to connect the phone device and the printer separately, the phone and the printer do not work correctly.

3. Select **Fax** on the printer's control panel.

   To select an item, use the◀▶ buttons, and then press the OK button.

4. Pick up the handset.

   If a message to start sending or receiving faxes is displayed as shown on the following screen, the connection has been established.

Related Information

➡ "Preparing the Printer to Send and Receive Faxes" on page 82
➡ "Selecting Settings When Using the Answering Machine Function on a Connected Phone" on page 85
➡ "Selecting Settings to Receive Faxes with a Connected Phone (Remote Receive)" on page 85
➡ "Receive Mode:" on page 242

Preparing the Printer to Send and Receive Faxes

Fax Setting Wizard configures the basic fax features to prepare the printer to send and receive faxes.

The Wizard is displayed automatically when the printer is turned on for the first time. You can also display the wizard manually from the printer's control panel. You need to run the wizard again if the wizard is skipped when the printer is first turned on or when the connection environment has changed.

❏ You can configure the following items through the wizard.

- ❏ **Header** (**Your Phone Number** and **Fax Header**)
- ❏ **Receive Mode** (**Auto** or **Manual**)
- ❏ **DRD Setting**

❏ The following items are set automatically according to the connection environment.

- ❏ **Dial Mode** (such as **Tone** or **Pulse**)

  Fax Setting Wizard may not configure **Dial Mode** automatically when **Line Type** is set to **PBX**. In that case, configure **Dial Mode** manually.

❏ Other items in **Basic Settings** remain as they are.

Related Information

➡ "Basic Settings Menu" on page 241

Preparing the Printer to Send and Receive Faxes Using Fax Setting Wizard

1. Select **More** on the home screen on the printer's control panel.

   To select an item, use the ◀ ▶ buttons, and then press the OK button.

2. Select **Settings**.

   To select an item, use the ▲ ▼ buttons, and then press the OK button.

3. Select **Fax Settings** > **Fax Setting Wizard**.

4. Following the on-screen instructions, enter the sender name such as your company name, and your fax number.

   Note:
   Your sender name and your fax number appear as the header for outgoing faxes.

5. Select the distinctive ring detection (DRD) setting.

   ❑ If you have subscribed to a distinctive ring service from your telephone company:

   Go to the next screen and select the ring pattern to be used for incoming faxes.

   When you select any item except **All**, **Receive Mode** is set to **Auto** and you continue to the next screen where you can check the settings you made.

   ❑ If you have not subscribed to a distinctive ring service from your telephone company, or you do not need to set this option:

   Skip this setting and go to the screen where you can check the settings you made.

   Note:
   ❑ *Distinctive ring services, offered by many telephone companies (the service name differs by company), allows you to have several phone numbers on one phone line. Each number is assigned a different ring pattern. You can use one number for voice calls and another for fax calls. Select the ring pattern assigned to fax calls in **DRD**.*

   ❑ *Depending on the region, **On** and **Off** are displayed as the **DRD** options. Select **On** to use the distinctive ring feature.*

6. Make the Receive Mode setting.

   ❑ If you do not need to connect a phone device to the printer:

   Select **No**.

   Receive Mode is set to **Auto**.

   ❑ If you need to connect a phone device to the printer:

   Select **Yes**, and then select whether or not to receive faxes automatically.

7. Check the settings you made on the screen displayed, and then proceed to the next screen.

   To correct or change settings, press the ⮌ button.

8. Check the fax connection by selecting **Start Checking**, and then select **Print** to print a report that shows the connection status.

   Note:
   - ❑ *If there are any errors reported, follow the instructions on the report to solve them.*
   - ❑ *If the **Select Line Type** screen is displayed, select the line type.*
     - *When you are connecting the printer to a PBX phone system or terminal adapter, select **PBX**.*
     - *When you are connecting the printer to a standard phone line, select **PSTN**. When the message to disable dial tone detection is shown on the screen, press the OK button. However, disabling dial tone detection may cause the printer to skip the first digit of a fax number when dialing and send the fax to the wrong number.*

Related Information

➡ "Connecting the Printer to a Phone Line" on page 79
➡ "Selecting Settings When Using the Answering Machine Function on a Connected Phone" on page 85
➡ "Receive Mode:" on page 242
➡ "Selecting Settings to Receive Faxes with a Connected Phone (Remote Receive)" on page 85
➡ "Basic Settings Menu" on page 241

Configuring the Printer's Fax Features

Using the printer's control panel, you can configure the printer's fax features individually based on your requirements. The settings made using **Fax Setting Wizard** can also be changed. For more details, see the descriptions of the **Fax Settings** menu.

"Fax Settings" on page 240

Related Information

➡ "Receiving Incoming Faxes" on page 97
➡ "Selecting Settings for a PBX Phone System" on page 84
➡ "Selecting Settings When You Connect a Phone Device" on page 85
➡ "Selecting Settings for Blocking Junk Faxes" on page 86
➡ "Selecting Settings to Send and Receive Faxes on a Computer" on page 87

Selecting Settings for a PBX Phone System

Select the following settings when using the printer in offices that use extensions and require external access codes, such as 0 and 9, to get an outside line.

1. Select **More** on the home screen on the printer's control panel.

   To select an item, use the◀▶ buttons, and then press the OK button.

2. Select **Settings**.

   To select an item, use the▲▼ buttons, and then press the OK button.

3. Select **Fax Settings** > **Basic Settings**.

4. Select **Line Type**, and then select **PBX**.

5. When sending a fax to an outside fax number using # (hash) instead of the actual external access code, select **Use** as the **Access Code**.

   The # entered is replaced with the stored access code when dialing. Using # helps avoid connection problems when connecting to an outside line.

   Note:
   *If you have registered recipients in **Contacts** using an external access code such as 0 or 9, set the **Access Code** to **Do Not Use**. Otherwise, you must change the code to # in **Contacts**.*

6. Enter the external access code used for your phone system, and then press the OK button.

7. Press the OK button to apply the settings.

   The access code is stored in the printer.

Related Information

➡ "Basic Settings Menu" on page 241

Selecting Settings When You Connect a Phone Device

Selecting Settings When Using the Answering Machine Function on a Connected Phone

Set up the printer to use the answering machine function of a connected phone.

1. Select **More** on the home screen on the printer's control panel.

   To select an item, use the◀▶ buttons, and then press the OK button.

2. Select **Settings**.

   To select an item, use the▲▼ buttons, and then press the OK button.

3. Select **Fax Settings** > **Basic Settings**.

4. Set **Receive Mode** to **Auto**.

5. Set the **Rings to Answer** setting of the printer to a higher number than the number of rings for the answering machine.

   If **Rings to Answer** is set lower than the number of rings for the answering machine, the answering machine cannot receive voice calls to record voice messages. See the manuals that came with the answering machine for its settings.

The printer's **Rings to Answer** setting may not be displayed, depending on the region.

Related Information

➡ "Basic Settings Menu" on page 241

Selecting Settings to Receive Faxes with a Connected Phone (Remote Receive)

You can start receiving incoming faxes by picking up the handset of a connected phone, without using the printer at all.

The **Remote Receive** feature is available for telephones that support tone dialing.

1. Select **More** on the home screen on the printer's control panel.

   To select an item, use the◀▶ buttons, and then press the OK button.

2. Select **Settings**.

   To select an item, use the▲▼ buttons, and then press the OK button.

3. Select **Fax Settings** > **Basic Settings** > **Remote Receive**.

4. Select **On**.

5. Enter a two digit code (you can enter 0 to 9, *, and #) as the start code, and then press the OK button to apply the setting.

Related Information

➡ "Basic Settings Menu" on page 241

Selecting Settings for Blocking Junk Faxes

You can block junk faxes.

1. Select **More** on the home screen on the printer's control panel.

   To select an item, use the◀▶ buttons, and then press the OK button.

2. Select **Settings**.

   To select an item, use the▲▼ buttons, and then press the OK button.

3. Select **Fax Settings** > **Basic Settings** > **Rejection Fax**.

4. Set the condition to block junk faxes.

   Select **Rejection Fax**, and then enable the following options.

   ❏ Rejection Number List: Rejects faxes that are in the Rejection Number List.

   ❏ Fax Header Blank: Rejects faxes that have blank header information.

   ❏ Caller not in Contacts: Rejects faxes that have not been added to the contacts list.

5. Press ⮌ to return to the **Rejection Fax** screen.

6. If you are using the **Rejection Number List**, select **Edit Blocked Number list**, and then edit the list.

Related Information

➡ "Basic Settings Menu" on page 241

Selecting Settings to Send and Receive Faxes on a Computer

To send and receive faxes on a computer, FAX Utility must be installed on a computer connected by network or USB cable.

Saving Received Faxes on a Computer

You can receive faxes on a computer by using the FAX Utility. Install FAX Utility on the client computer and select settings as needed. For details, see Basic Operations in the FAX Utility help (displayed on the main window).

If the setting below on the printer's control panel is set to **Yes**, received faxes can be saved on the computer.

More > **Settings** > **Fax Settings** > **Receive Settings** > **Save to Computer**

Saving Received Faxes on a Computer and Printing Them

You can enable the setting to print received faxes on the printer as well as save them on a computer.

1. Select **More** on the home screen on the printer's control panel.

   To select an item, use the ◀ ▶ buttons, and then press the OK button.

2. Select **Settings**.

   To select an item, use the ▲ ▼ buttons, and then press the OK button.

3. Select **Fax Settings** > **Receive Settings**.

4. Select **Save to Computer** > **Yes and Print**.

Disabling the Saving of Received Faxes on a Computer

To set the printer not to save received faxes on the computer, change the settings on the printer.

Note:
You can also change the settings using the FAX Utility. However, if there are any faxes that have been unsaved to the computer, the feature does not work.

1. Select **More** on the home screen on the printer's control panel.

   To select an item, use the ◀ ▶ buttons, and then press the OK button.

2. Select **Settings**.

   To select an item, use the ▲ ▼ buttons, and then press the OK button.

3. Select **Fax Settings** > **Receive Settings**.

4. Select**Save to Computer** > **No**.

Making Contacts Available

Registering a contacts list allows you to easily enter destinations. You can register up to 100 entries, and you can use the contacts list when you enter a fax number.

Registering or Editing Contacts

1. Select **More** on the home screen on the printer's control panel.

   To select an item, use the◀▶ buttons, and then press the OK button.

2. Select **Settings**.

   To select an item, use the▲▼ buttons, and then press the OK button.

3. Select **Contacts Manager**.

4. Do one of the following.

   ❏ To register a new contact, select **Add Entry**, and then select the registry number.

   ❏ To edit a contact, select **Edit**, and then select the target contact.

   ❏ To delete a contact, select **Delete**, select the target contact, and then select **Yes**. No further steps are necessary.

5. Configure the necessary settings.

   Note:
   *When entering a fax number, enter an external access code at the beginning of the fax number if your phone system is PBX and you need the access code to get an outside line. If the access code has been set in the **Line Type** setting, enter a hash (#) instead of the actual access code. To add a pause (pause for three seconds) during dialing, enter a hyphen (-).*

6. Press the OK button to proceed, and then select **Add Entry** to complete registering or editing.

Registering or Editing Grouped Contacts

Adding contacts to a group allows you to send a fax to multiple destinations at the same time.

Note:
You can register up to 100 destinations and groups to the contacts list in total.

1. Select **More** on the home screen on the printer's control panel.

   To select an item, use the◀▶ buttons, and then press the OK button.

2. Select **Settings**.

   To select an item, use the▲▼ buttons, and then press the OK button.

3. Select **Contacts Manager**.

4. Do one of the following.

   ❏ To register a new group of contacts, select **Add Group**, and then select the registry number.

   ❏ To edit a group of contacts, select **Edit**, and then select the target group.

   ❏ To delete a group of contacts, select **Delete**, select the target group, and then select **Yes**. No further steps are necessary.

5. Enter or edit the **Group Name**, and then select the OK.

6. Enter or edit the **Index Word**, and then select the OK.

7. Select the contacts that you want to register in the group.

   Each time you press the ▶ button, the contact is selected and deselected alternatively.

8. Press the OK button to proceed, and then select **Add Entry** to complete registering or editing.

Registering Contacts on a Computer

Using Web Config, you can create a contacts list on your computer and import it to the printer.

1. Access Web Config.

2. Log on as an administrator from **Advanced Settings**.

   Note:
   The administrator password is set in advance for the advanced settings in Web Config. See the link below for details on the administrator password.

3. Select in the following order.

   Scan/Copy or **Fax** tab > **Contacts**

4. Select the number that you want to register, and then click **Edit**.

5. Enter **Name**, **Index Word**, **Fax Number**, and **Fax Speed**.

6. Click **Apply**.

Related Information

➡ "Application for Configuring Printer Operations (Web Config)" on page 232
➡ "Default Value of the Administrator Password" on page 16

Contact Settings Items

Items	Settings and Explanation
Name	Enter a name contact name in 30 characters or less in Unicode (UTF-8). If you do not specify this, leave it blank.
Index Word	Enter words to associate with this entry for better results when searching for it. Enter 30 characters or less in Unicode (UTF-8). This field is optional.
Type	Select the type of destination you want to register.
Assign to Frequent Use	This item is not supported.
Fax Number	Enter between 1 and 64 characters using 0-9 - * # and space.
Fax Speed	Select a communication speed for the contact.

Registering Contacts in a Group

1. Access Web Config.

2. Log on as an administrator from **Advanced Settings**.

   Note:
   The administrator password is set in advance for the advanced settings in Web Config. See the link below for details on the administrator password.

3. Select in the following order.

   Scan/Copy or **Fax** tab > **Contacts**

4. Select the number that you want to register, and then click **Edit**.

5. Enter a **Name** and **Index Word**.

6. Select a group from **Type**.

7. Click **Select** for **Contact(s) for Group**.

   The available contact are displayed.

8. Select the contact that you want to register to the group, and then click **Select**.

   Note:
   Contacts can be registered to multiple groups.

9. Click **Apply**.

Related Information

➡ "Application for Configuring Printer Operations (Web Config)" on page 232
➡ "Default Value of the Administrator Password" on page 16

Overview of this Printer's Fax Features

Sending Faxes

Sending Methods

❏ Sending automatically

When you scan an original by pressing the ⊡ button to select **Send Fax**, the printer dials the recipients and sends the fax.

"Sending Faxes Using the Printer" on page 93

❏ Sending manually

When you perform a manual check on the line connection by dialing the recipient, press the ⊡ button to select **Send Fax** to start sending a fax directly.

"Sending Faxes Dialing from the External Phone Device" on page 94

Recipient Designation when Sending a Fax

You can enter recipients using keypad buttons, **Contacts**, and **Recent**.

"Selecting Recipients" on page 93

"Making Contacts Available" on page 87

Scan Settings when Sending a Fax

You can select items such as **Resolution** or **Original Size (Glass)** when sending faxes.

"Scan Settings:" on page 99

Using Fax Send Settings when Sending a Fax

You can use **Fax Send Settings** such as **Direct Send** (to send a large document stably) or **Send Fax Later** (to send a fax at a time you specify).

"Fax Send Settings:" on page 99

Receiving Faxes

Receive Mode

There are two options in **Receive Mode** for receiving incoming faxes.

❏ Manual

Mainly for phoning, but also for faxing

"Usage of Manual Mode" on page 97

❏ Auto

- Only for faxing (external phone device is not required)
- Mainly for faxing, and sometimes phoning

"Usage of Auto Mode" on page 97

Receiving Faxes by Operating a Connected Phone

You can receive faxes by only operating an external phone device.

"Basic Settings Menu" on page 241

"Selecting Settings When You Connect a Phone Device" on page 85

PC-FAX Send/Receive (Windows/Mac OS)

PC-FAX Send

You can send faxes from a computer.

"Application for Configuring Fax Operations and Sending Faxes (FAX Utility)" on page 231

"Sending a Fax from a Computer" on page 102

PC-FAX Receive

You can receive faxes on a computer.

"Selecting Settings to Send and Receive Faxes on a Computer" on page 87

"Application for Configuring Fax Operations and Sending Faxes (FAX Utility)" on page 231

"Receiving Faxes on a Computer" on page 106

Various Fax Reports

You can check the status of sent and received faxes in a report.

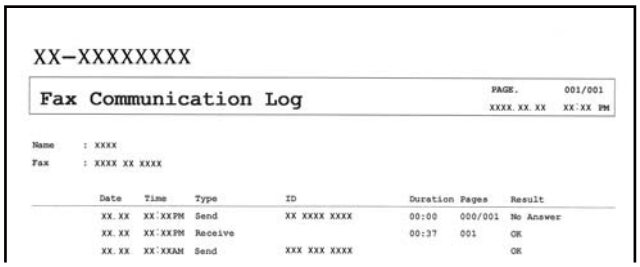
XX-XXXXXXXX

Fax Communication Log

PAGE. 001/001
XXXX.XX.XX XX:XX PM

Name : XXXX
Fax : XXXX XX XXXX

Date	Time	Type	ID	Duration	Pages	Result
XX.XX	XX:XXPM	Send	XX XXXX XXXX	00:00	000/001	No Answer
XX.XX	XX:XXPM	Receive		00:37	001	OK
XX.XX	XX:XXAM	Send	XXX XXX XXXX			OK

"Report Settings Menu" on page 244

"Fax Send Settings:" on page 99

"Transmission Log:" on page 100

"Fax Report:" on page 100

Security when Sending and Receiving Faxes

You can use many security features such as **Direct Dialing Restrictions** to prevent sending to the wrong destination, or **Backup Data Auto Clear** to prevent information leakage.

"Security Settings Menu" on page 245

Other Useful Features

Blocking Junk Faxes

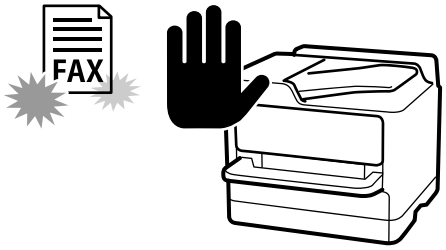

You can reject junk faxes.

"Rejection Fax:" on page 242

Receiving Faxes After Dialing

After dialing to another fax machine, you can receive documents from that fax machine.

"Receiving Faxes by Making a Phone Call" on page 98

"Polling Receive:" on page 101

Sending Faxes Using the Printer

You can send faxes by entering fax numbers for recipients on the printer's control panel.

1. Place the originals.

   You can send up to 100 pages in one transmission; however depending on the remaining amount of memory, the number of pages you can send may be less.

   "Placing Originals on the Scanner Glass" on page 38

   "Placing Originals on the ADF" on page 37

2. Select **Fax** on the printer's control panel.

   To select an item, use the ◀▶ buttons, and then press the OK button.

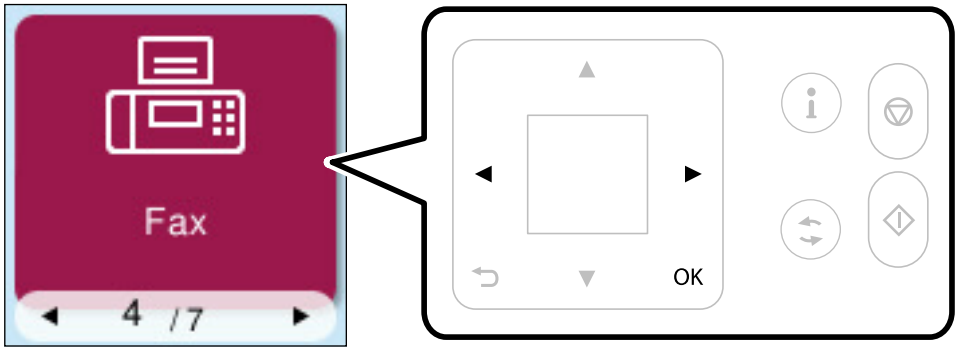

3. Specify the recipient.

   "Selecting Recipients" on page 93

4. Select **Menu** by pressing the OK button, and then select **Scan Settings** or **Fax Send Settings** to make settings as necessary such as the resolution and the sending method.

   "Scan Settings:" on page 99

   "Fax Send Settings:" on page 99

5. Press the ◇ button to send the fax.

   Note:
   - *If the fax number is busy or there are any sending issues, the printer automatically redials after one minute.*
   - *To cancel sending, press the ▽ button.*
   - *It takes longer to send a fax in color because the printer performs scanning and sending simultaneously. While the printer is sending a fax in color, you cannot use the other features.*

Selecting Recipients

You can specify fax recipients using the following methods.

Entering Fax Number Manually

Enter the fax number with the number buttons, and then press the OK button.

- To add a pause (pause for three seconds during dialing), press the ▼ button.

- If you have entered an external access code in **Line Type**, enter "#" (hash) instead of the actual external access code at the beginning of the fax number.

Note:
*If you cannot manually enter a fax number, **Direct Dialing Restrictions** in **Security Settings** is set to **On**. Select fax recipients from the contacts list or the sent fax history.*

Selecting the recipients from the contacts list

Press the ▲ button and select the recipients you want to send to. If the recipient you want to send to has not been registered in **Contacts**, register it from **Contacts Manager**.

Fax > **Menu** > **Contacts Manager**

Selecting the recipients from the sent fax history

Press the ▼ button, and then select a recipient.

Note:

*To deselect recipients you have entered, press the ▶ button, move the cursor to the recipient you want to deselect by press the ▲▼ button, and then deselect the recipient by pressing the OK button. Press the ⮌ button to finish and return to the **Fax** screen.*

Related Information

➡ "Making Contacts Available" on page 87

Various Ways of Sending Faxes

Sending Faxes Dialing from the External Phone Device

You can send a fax by dialing using a connected phone device when you want to talk over the phone before sending a fax, or when the recipient's fax machine does not switch to the fax automatically.

1. Place the originals.

   You can send up to 100 pages in one transmission.

2. Pick up the handset of the phone device, and then dial the recipient's fax number using the phone.

   Note:
   When the recipient answers the phone, you can talk with the recipient.

3. Select **Fax** on the home screen.

   To select an item, use the ◀▶ buttons, and then press the OK button.

4. Press the OK button, and then select **Scan Settings** or **Fax Send Settings** to make settings such as the resolution and the sending method if necessary.

5. When you hear a fax tone, press the ⊡ button, and then hang up the handset.

   Note:
   When a number is dialed using the connected phone device, it takes longer to send a fax because the printer performs scanning and sending simultaneously. While sending the fax, you cannot use the other features.

6. When sending is complete, remove the originals.

Related Information

➡ "Scan Settings:" on page 99
➡ "Fax Send Settings:" on page 99

Sending Different Size Documents Using ADF (ADF Continuous Scan)

Sending faxes by placing originals one by one, or by placing originals by size, you can send them as one document at their original sizes.

If you place different sized originals in the ADF, all of the originals are sent at the largest size among them. To send originals at their original sizes, do not place different sized originals at the same time.

1. Place the first batch of same sized originals.

2. Select **Fax** on the home screen.

   To select an item, use the◀▶ buttons, and then press the OK button.

3. Specify the recipient.

   "Selecting Recipients" on page 93

4. Press the OK button, and then select **Scan Settings**.

5. Select **ADF Continuous Scan**, and then select **On**.

   You can also select settings such as the resolution and the sending method in **Scan Settings** or **Fax Send Settings** if necessary.

6. Press the ⮌ button until you return to the **Fax** screen, and then press the ⊡ button.

7. When scanning the previous originals is complete and the message **Send another page?** is displayed on the control panel, select **Yes**, load the next batch of same sized originals, and then press the ⊡ button.

   Note:
   If you leave the printer untouched for 60 seconds after prompted to set the next originals, the printer stops storing and starts sending the document.

8. When sending is complete, remove the originals.

Sending Many Pages of a Monochrome Document (Direct Send)

When sending a fax in monochrome, the scanned document is temporarily stored in the printer's memory. Therefore, sending a lot of pages may cause the printer to run out of memory and stop sending the fax. You

can avoid this by enabling the **Direct Send** feature, however, it takes longer to send the fax because the printer performs scanning and sending simultaneously. You can use this feature when there is only one recipient.

Accessing the Menu

You can find the menu on the printer's control panel.

Fax > **Menu** > **Fax Send Settings** > **Direct Send**.

Sending Faxes in Monochrome at a Specified Time of the Day (Send Fax Later)

You can set to send a fax at a specified time. Only monochrome faxes can be sent when the time to send is specified.

1. Place the originals.
2. Select **Fax** on the home screen.

   To select an item, use the◀▶ buttons, and then press the OK button.
3. Specify the recipient.

   "Selecting Recipients" on page 93
4. Select settings to send the fax at a specified time.

   ❶ Press the OK button, and then select **Fax Send Settings**.

   ❷ Select **Send Fax Later**, and then select **On**.

   ❸ Enter the time you want to send the fax, and then press the OK button.

   You can also select settings such as the resolution and the sending method in **Scan Settings** or **Fax Send Settings** if necessary.
5. Press the ⮌ button until you return to **Fax** screen, and then press the ⟐ button.
6. When sending is complete, remove the originals.

Note:
*You can cancel faxing from the **Fax** screen.*

Receiving Faxes on the Printer

If the printer is connected to the phone line and basic settings have been completed using the Fax Setting Wizard, you can receive faxes.

Received faxes are printed.

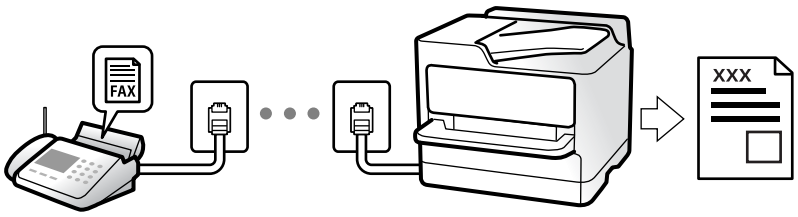

When you want to check the status of the fax settings, print a **Fax Settings List** by selecting **Fax** > **Menu** > **More** > **Fax Report** > **Fax Settings List**.

Receiving Incoming Faxes

There are two options in **Receive Mode**.

Related Information

➡ "Usage of Manual Mode" on page 97
➡ "Usage of Auto Mode" on page 97
➡ "Receive Mode:" on page 242

Usage of Manual Mode

This mode is mainly for making phone calls, but is also for faxing.

Receiving Faxes

When the connected phone device rings, you can answer the ringing manually by picking up the handset.

❏ When you hear a fax signal (baud):

Select **Fax** on the printer's home screen, press the # button to start receiving the fax, and then press the ⊡ button. Next, hang up the handset.

❏ If the ringing is for a voice call:

You can answer the phone as normal.

Receiving Faxes Using only the Connected Phone Device

When **Remote Receive** is set, you can receive faxes by simply entering the start code.

When the telephone rings, pick up the handset. When you hear a fax tone (baud), dial the two digit start code, and then hang up the handset.

Related Information

➡ "Remote Receive:" on page 242

Usage of Auto Mode

This mode allows you to use the line for the following uses.

❏ Faxing only (external telephone is not necessary)

❏ Faxing mainly, and sometimes phoning

Receiving Faxes Without an External Phone Device

The printer automatically switches to receive faxes when the number of rings you set in **Rings to Answer** has occurred.

Receiving Faxes With an External Phone Device

A printer with an external phone device works as follows.

❏ When the answering machine answers within the number of rings set in **Rings to Answer**:

- If the ringing is for a fax: The printer automatically switches to receive faxes.
- If the ringing is for a voice call; The answering machine can receive voice calls and record voice messages.

❏ When you pick up the handset within the number of rings set in **Rings to Answer**:

- If the ringing is for a fax: Select **Fax** on the printer's home screen, press the # button to start receiving the fax, and then press the ◇ button. Next hang up the handset.
- If the ringing is for a voice call: You can answer the phone as normal.

❏ When the ringing stops and the printer automatically switches to receive faxes:

- If the ringing is for a fax: The printer starts receiving faxes.
- If the ringing is for a voice call: You cannot answer the phone. Ask the person to call you back.

Note:
*Set the number of rings to answer for the answering machine to a lower number than the number set in **Rings to Answer**. Otherwise, the answering machine cannot receive voice calls to record voice messages. For details on setting up the answering machine, see the manual supplied with the answering machine.*

Related Information

➡ "Rings to Answer:" on page 242

Receiving Faxes by Making a Phone Call

You can receive a fax stored on another fax machine by dialing the fax number.

Receiving Faxes by Polling (Polling Receive)

You can receive a fax stored on another fax machine by dialing the fax number. Use this feature to receive a document from a fax information service.

Note:

❏ *If the fax information service has an audio guidance feature that you need to follow to receive a document, you cannot use this feature.*

❏ *To receive a document from a fax information service that uses audio guidance, just dial the fax number using the connected telephone, and operate the phone and the printer following the audio guidance.*

1. Select **Fax** on the home screen.

   To select an item, use the◀▶ buttons, and then press the OK button.

2. Press the OK button, and then select **More**.

3. Select **Polling Receive**, and then select **On**.

4. Specify the recipient.

   Note:
   *If you cannot manually enter a fax number, **Direct Dialing Restrictions** in **Security Settings** is set to **On**. Select fax recipients from the contacts list or the sent fax history.*

5. Press the ⟐ button to start **Polling Receive**.

Menu Options for Faxing

Contacts:

Select a recipient from the contacts list. You can also add or edit a contact.

Recent:

Select a recipient from the sent fax history. You can also add the recipient to the contacts list.

Menu:

Scan Settings:

Resolution:

Select the resolution of the outgoing fax. If you select a higher resolution, the data size becomes larger and it takes more time to send the fax.

Density:

Sets the density of the outgoing fax. Press ▶ to make the density darker, and press ◀ to make it lighter.

ADF Continuous Scan:

Sending faxes by placing originals one by one, or by placing originals by size, you can send them as one document at their batches of same size originals.

"Sending Different Size Documents Using ADF (ADF Continuous Scan)" on page 95

Original Size (Glass):

Select the size and orientation of the original you placed on the scanner glass.

Color Mode:

Select whether to scan in color or in monochrome.

Clear All Settings:

Restores all settings in **Scan Settings** to their defaults.

Fax Send Settings:

Direct Send:

Sends a monochrome fax while scanning the originals. Since scanned originals are not stored temporarily in the printer's memory even when sending a large volume of pages, you can avoid printer errors due to a lack of memory. Note that sending using this feature takes longer than not using this feature. See the related information below on this topic.

You cannot use this feature when sending a fax to multiple recipients.

"Sending Many Pages of a Monochrome Document (Direct Send)" on page 95

Send Fax Later:

Sends a fax at a time you specify. You can only send monochrome faxes when using this option.

"Fax Send Settings:" on page 99

Add Sender Info:

Select the position where you want to include the header information (sender name and fax number) in the outgoing fax, or not to include the information.

- **Off**: Sends a fax with no header information.
- **Outside of Image**: Sends a fax with header information in the top white margin of the fax. This keeps the header from overlapping with the scanned image, however, the fax received by the recipient may be printed across two sheets depending on the size of the originals.
- **Inside of Image**: Sends a fax with header information approximately 7 mm lower than the top of the scanned image. The header may overlap with the image, however, the fax received by the recipient will not be split into two documents.

Fax Header:

Select the header for the recipient. To use this feature, you should register multiple headers in advance.

Additional Header Info:

Select the information you want to add. You can select one from **Your Phone Number** and **Destination List**.

Transmission Report:

Prints a transmission report after you send the fax.

Print on Error prints a report only when an error occurs.

When **Attach Fax image to report** has been set in **More** > **Settings** > **Fax Settings** > **Report Settings**, faxes with errors are also printed with the report.

Clear All Settings:

Restores all settings in **Fax Send Settings** to their defaults.

More:

Transmission Log:

You can check the history of sent or received fax jobs.

Fax Report:

Last Transmission:

Prints a report for the previous fax that was sent or received through polling.

Fax Log:

Prints a transmission report. You can set to print this report automatically using the following menu.

More > **Settings** > **Fax Settings** > **Report Settings** > **Fax Log Auto Print**

Fax Settings List:

Prints the current fax settings.

Protocol Trace:

Prints a detailed report for the previous fax that was sent or received.

Reprint Faxes:

Reprints the received faxes in the printer.

Polling Receive:

When this is set to **On** and you call the sender's fax number, you can receive documents from the sender's fax machine.

"Receiving Faxes by Polling (Polling Receive)" on page 98

Fax Settings:

Accesses **More** > **Settings** > **Fax Settings**.

"Fax Settings" on page 240

Contacts Manager:

Add Entry:

Register an entry to be used for faxes in contacts.

Add Group:

Register an entry for group faxes in contacts.

Edit:

Edit entries and groups registered in contacts.

Delete:

Delete an entry or group registered in contacts.

Print Contacts:

Print your contacts list.

Using Other Faxing Features

Printing Fax Report Manually

1. Select **Fax** on the home screen.

   To select an item, use the◀▶ buttons, and then press the OK button.

2. Press OK button and select **More**.

3. Select **Fax Report**.

4. Select the report you want to print, and then follow the on-screen instructions.

   Note:
   *You can change the report format. From the home screen, select **More** > **Settings** > **Fax Settings** > **Report Settings**, and then change the **Attach Fax image to report** or **Report Format** settings.*

Sending a Fax from a Computer

You can send faxes from the computer by using the FAX Utility and PC-FAX driver.

For details on how to operate FAX Utility, see Basic Operations in the FAX Utility help (displayed on the main window).

Note:

❏ *Check if the FAX Utility and the printer's PC-FAX driver are installed before using this feature.*

"Application for Configuring Fax Operations and Sending Faxes (FAX Utility)" on page 231

"Application for Sending Faxes (PC-FAX Driver)" on page 232

❏ *If the FAX Utility is not installed, install the FAX Utility using the EPSON Software Updater (application for updating software).*

"Application for Updating Software and Firmware (Epson Software Updater)" on page 233

Sending Documents Created Using an Application (Windows)

By selecting a printer fax from the **Print** menu of an application like Microsoft Word or Excel, you can directly transmit data such as documents, drawings, and tables you have created, with a cover sheet.

Note:
The following explanation uses Microsoft Word as an example. The actual operation may differ depending on the application you use. For details, see the application's help.

1. Using an application, create a document to transmit by fax.

2. Click **Print** from the **File** menu.

   The application's **Print** window appears.

3. Select **XXXXX (FAX)** (where XXXXX is your printer name) in **Printer**, and then check the settings for fax sending.

   ❏ Specify **1** in **Number of copies**. Fax may not be transmitted correctly if you specify **2** or more.

   ❏ You can send up to 100 pages in one fax transmission.

4. Click **Printer Properties** or **Properties** if you want to specify **Paper Size**, **Orientation**, **Color**, **Image Quality**, or **Character Density**.

   For details, see the PC-FAX driver help.

5. Click **Print**.

   Note:
   *When Using FAX Utility for the first time, a window for registering your information is displayed. Enter the necessary information, and then click **OK**.*

   The **Recipient Settings** screen is displayed.

6. When you want to send other documents in the same fax transmission, select the **Add documents to send** checkbox.

   The screen for adding documents is displayed when you click **Next** in step 9.

7. Select **Attach a cover sheet** checkbox if necessary.

8. Specify a recipient.

   ❑ Selecting a recipient from **PC-FAX Phone Book**:

   If the recipient is saved in the phone book, do the steps below.

   ❶ Click the **PC-FAX Phone Book** tab.

   ❷ Select the recipient from the list and click **Add**.

   ❑ Selecting a recipient from the contacts on the printer:

   If the recipient is saved in the contacts on the printer, do the steps below.

   ❶ Click the **Contacts on Printer** tab.

   ❷ Select contacts from the list and click **Add** to proceed to **Add to Recipient** window.

   ❸ Select the contacts from the list displayed, and then click **Edit**.

   ❹ Add the personal data such as **Company/Corp.** and **Title** as necessary, and then click **OK** to return to the **Add to Recipient** window.

   ❺ As necessary, select the checkbox of **Register in the PC-FAX Phone Book** to save the contacts to **PC-FAX Phone Book**.

   ❻ Click **OK**.

   ❑ Specifying a recipient directly:

   Do the steps below.

   ❶ Click the **Manual Dial** tab.

   ❷ Enter the necessary information.

   ❸ Click **Add**.

   Furthermore, by clicking **Save to Phone Book**, you can save the recipient in the list under the **PC-FAX Phone Book** tab.

   Note:

   ❑ *If your printer's Line Type is set to **PBX** and the access code has been set to use # (hash) instead of entering the exact prefix code, enter # (hash). For details, see Line Type in Basic Settings from related information link below.*

   ❑ *If you have selected **Enter fax number twice** in the **Optional Settings** on the FAX Utility main screen, you need to enter the same number again when you click **Add** or **Next**.*

   The recipient is added to the **Recipient List** displayed in the upper part of the window.

9. Click **Next**.

   ❑ If you selected the **Add documents to send** checkbox, follow the steps below to add documents in the **Document Merging** window.

   ❶ Open a document you want to add, and then select the same printer (fax name) in the **Print** window. The document is added to the **Document List to Merge** list.

   ❷ Click **Preview** to check the merged document.

   ❸ Click **Next**.

   Note:
   *The **Image Quality** and **Color** settings you have selected for the first document are applied to other documents.*

❑ If you selected the **Attach a cover sheet** checkbox, specify the content of the cover sheet in the **Cover Sheet Settings** window.

❶ Select a cover sheet from samples in the **Cover Sheet** list. Note that there is no function to create an original cover sheet or to add an original cover sheet to the list.

❷ Enter the **Subject** and **Message**.

❸ Click **Next**.

Note:
*Set the following as necessary in **Cover Sheet Settings**.*

❑ *Click **Cover Sheet Formatting** if you want to change the order of the items on the cover sheet. You can select the cover sheet size in **Paper Size**. You can also select a cover sheet at a different size to the document being transmitted.*

❑ *Click **Font** if you want to change the font used for the text on the cover sheet.*

❑ *Click **Sender Settings** if you want to change the sender information.*

❑ *Click **Detailed Preview** if you want to check the cover sheet with the subject and the message you entered.*

10. Check the transmission content and click **Send**.

    Make sure the name and fax number of the recipient are correct before transmitting. Click **Preview** to preview the cover sheet and document to transmit.

    Once transmission starts, a window displaying the transmission status appears.

    Note:

    ❑ *To stop transmitting, select the data, and click **Cancel** ✕. You can also cancel using the printer's control panel.*

    ❑ *If an error occurs during transmission, the **Communication error** window appears. Check the error information and retransmit.*

    ❑ *The Fax Status Monitor screen (the screen mentioned above where you can check the transmission status) is not displayed if **Display Fax Status Monitor During Transmission** is not selected in the **Optional Settings** screen of the FAX Utility main screen.*

Related Information

➡ "Basic Settings Menu" on page 241

Sending Documents Created Using an Application (Mac OS)

By selecting a fax-capable printer from the **Print** menu of a commercially available application, you can send data such as documents, drawings, and tables, you have created.

Note:
The following explanation uses TextEdit, a standard Mac OS application as an example.

1. Create the document you want to send by fax in an application.

2. Click **Print** from the **File** menu.

   The application's **Print** window is displayed.

3. Select your printer (fax name) in **Name**, click ▼ to display the detailed settings, check the print settings, and then click **OK**.

4. Select settings for each item.
   - ❏ Specify **1** in **Number of copies**. Even if you specify **2** or more, only 1 copy is sent.
   - ❏ You can send up to 100 pages in one fax transmission.

   Note:
   The page size of documents you can send is the same as the paper size you can fax from the printer.

5. Select **Fax Settings** from the popup menu, and then select settings for each item.

   See the PC-FAX driver's help for explanations on each setting.

   Click in the bottom left corner of the window to open the PC-FAX driver's help.

6. Select the **Recipient Settings** menu, and then specify the recipient.
   - ❏ Specifying a recipient directly:

     Click the **Add** item, enter the necessary information, and then click . The recipient is added to the Recipient List displayed in the upper part of the window.

     If you have selected **Enter fax number twice** in the PC-FAX driver settings, you need to enter the same number again when you click .

     If your fax connection line requires a prefix code, enter External Access Prefix.

     Note:
     *If your printer's Line Type is set to **PBX** and the access code has been set to use # (hash) instead of entering the exact prefix code, enter # (hash). For details, see Line Type in Basic Settings from the Related Information link below.*

   - ❏ Selecting a recipient from the phone book:

     If the recipient is saved in the phone book, click . Select the recipient from the list, and then click **Add** > **OK**.

     If your fax connection line requires a prefix code, enter External Access Prefix.

     Note:
     *If your printer's Line Type is set to **PBX** and the access code has been set to use # (hash) instead of entering the exact prefix code, enter # (hash). For details, see Line Type in Basic Settings from the Related Information link below.*

7. Check the recipient settings, and then click **Fax**.

   Sending starts.

   Make sure the name and fax number of the recipient are correct before transmitting.

   Note:
   - ❏ *If you click the printer icon in Dock, the transmission status check screen is displayed. To stop sending, click the data, and then click **Delete**.*
   - ❏ *If an error occurs during transmission, the **Sending failed** message is displayed. Check the transmission records on the **Fax Transmission Record** screen.*
   - ❏ *Mixed paper size documents may not be sent correctly.*

Related Information

➡ "Basic Settings Menu" on page 241

Receiving Faxes on a Computer

Faxes can be received by a printer and saved in PDF format on a computer connected to the printer. Use the FAX Utility (application) to select settings.

For details on how to operate the FAX Utility, see Basic Operations in the FAX Utility help (displayed on the main window). If the password entry screen is displayed on the computer screen while you are selecting settings, enter the password. If you do not know the password, contact your administrator.

Note:

- *Check if the FAX Utility has been installed and the FAX Utility settings have been selected before using this feature.*

  "Application for Configuring Fax Operations and Sending Faxes (FAX Utility)" on page 231

- *If the FAX Utility is not installed, install the FAX Utility using the EPSON Software Updater (application for updating software).*

  "Application for Updating Software and Firmware (Epson Software Updater)" on page 233

Important:

- *To receive faxes on a computer, the **Receive Mode** on the printer's control panel must be set to **Auto**. To select settings on the printer's control panel, select **More** > **Settings** > **Fax Settings** > **Basic Settings** > **Receive Mode**.*
- *The computer that will receive faxes should always be on. Received documents are saved in the printer's memory temporarily before the documents are saved on the computer. If you turn off the computer, the printer's memory might become full as it cannot send the documents to the computer.*
- *When received faxes have been temporarily saved to the printer's memory, the light turns on.*
- *To read the received faxes, you need to install a PDF viewer such as Adobe Reader in the computer.*

Checking for New Faxes (Windows)

By setting up a computer to save faxes received by the printer, you can check the processing status of received faxes, and whether or not there are any new faxes using the fax icon on the Windows task bar. By setting up the computer to display a notification when new faxes are received, a notification screen pops up near the Windows system tray, and you can check the new faxes.

Note:

- *Received fax data saved to the computer is removed from the printer's memory.*
- *You need Adobe Reader to view the received faxes saved as PDF files.*

Using the Fax Icon on the Task Bar (Windows)

You can check for new faxes and the operation status by using the fax icon displayed on the Windows taskbar.

1. Check the icon.
   - : Standing by.
   - : Checking for new faxes.
   - : New faxes received.

2. Right-click the icon, and then click **View Receiving Fax Record**.

   The **Receiving Fax Record** screen is displayed.

3. Check the date and the sender in the list, and then open the received file as a PDF.

   Note:
   - ❏ *Received faxes are automatically renamed using the following naming format.*

     YYYYMMDDHHMMSS_xxxxxxxxxx_nnnnn (Year/Month/Day/Hour/Minute/Second_sender's number)
   - ❏ *You can also open the received fax folder directly when you right-click the icon. For details, see **Optional Settings** in the FAX Utility and its help (displayed on the main window).*

While the fax icon indicates that it is standing by, you can check for new faxes instantly by selecting **Check new faxes now**.

Using the Notification Window (Windows)

When you enable the FAX Utility to notify you about new faxes a notification window is displayed near the task bar for each the fax.

1. Check the notification screen displayed on your computer screen.

   Note:
   The notification screen disappears if no operation is performed for a given length of time. You can change the notification settings such as the display time.

2. Click anywhere in the notification screen, except for the button.

   The **Receiving Fax Record** screen is displayed.

3. Check the date and the sender in the list, and then open the received file as a PDF.

   Note:
   - ❏ *Received faxes are automatically renamed using the following naming format.*

     YYYYMMDDHHMMSS_xxxxxxxxxx_nnnnn (Year/Month/Day/Hour/Minute/Second_sender's number)
   - ❏ *You can also open the received fax folder directly when you right-click the icon. For details, see **Optional Settings** in the FAX Utility and its help (displayed on the main window).*

Checking for New Faxes (Mac OS)

You can check for new faxes using one of the following methods. This is available only on computers set to **"Save" (save faxes on this computer)**.

- ❏ Open the received fax folder (specified in **Received Fax Output Settings.**).
- ❏ Open the Fax Receive Monitor and click **Check new faxes now**.
- ❏ Select the **Notify me of new faxes via a dock icon** in the **Fax Receive Monitor** > **Preferences** in the FAX Utility, the fax receive monitor icon on the Dock jumps to notify you that new faxes have arrived.

Open the Received Fax Folder from Received Fax Monitor (Mac OS)

You can open the save folder from the computer specified to receive faxes when selecting **"Save" (save faxes on this computer)**.

1. Click the received fax monitor icon on the Dockto open **Fax Receive Monitor**.
2. Select the printer and click **Open folder**, or double click the printer name.
3. Check the date and the sender in the file name, and then open the PDF file.

   Note:
   - ❏ *Received faxes are automatically renamed using the following naming format.*

     YYYYMMDDHHMMSS_xxxxxxxxxx_nnnnn (Year/Month/Day/Hour/Minute/Second_sender's number)
   - ❏ *Information sent from the sender is displayed as the sender's number. This number may not be displayed depending on the sender.*

Canceling the Feature that Saves Incoming Faxes to the Computer

You can cancel saving faxes to the computer by using the FAX Utility.

For details, see Basic Operations in the FAX Utility help (displayed on the main window).

Note:
- ❏ *If there are any faxes that have not been saved to the computer, you cannot cancel the feature that saves faxes on the computer.*
- ❏ *You can also change the settings on the printer. See "Related Information" below to change settings.*

Related Information

➡ "Disabling the Saving of Received Faxes on a Computer" on page 87

Maintaining the Printer

Checking the Ink Levels. 110

Reset the Ink Level. 110

Improving Print, Copy, Scan, and Fax Quality. 111

Cleaning the Printer. 120

Cleaning Spilled ink. 121

Checking the Ink Levels

To confirm the actual ink remaining, visually check the ink levels in all of the printer's tanks.

Important:

Prolonged use of the printer when any ink level is below the lower line could damage the printer.

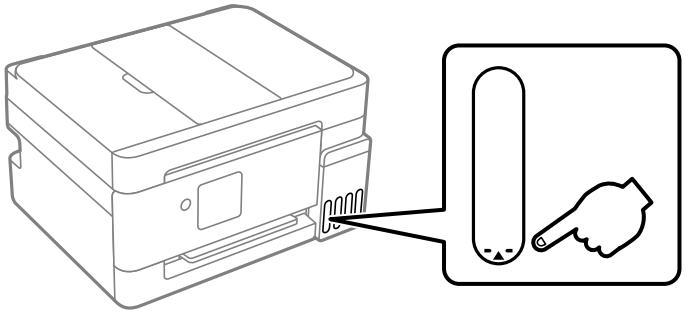

Note:

You can also check the approximate ink levels from the status monitor on the printer driver.

❑ *Windows*

*Click **EPSON Status Monitor 3** on the **Maintenance** tab.*

*If **EPSON Status Monitor 3** is disabled, click **Extended Settings** on the **Maintenance** tab, and then select **Enable EPSON Status Monitor 3**.*

❑ *Mac OS*

*Apple menu > **System Preferences (or System Settings)** > **Printers & Scanners** (or **Print & Scan**, **Print & Fax**) > Epson(XXXX) > **Options & Supplies** > **Utility** > **Open Printer Utility** > **EPSON Status Monitor***

Note:

The product has a low ink alert system. The accuracy of this system depends on the user refilling the ink tanks correctly. The product cannot directly measure the ink levels in the tanks; instead it estimates the amount of ink remaining by internally monitoring ink usage. The low ink alert system may generate inaccurate messages if the ink tanks are not refilled according to these instructions.

As a precaution, perform regular visual inspections of the ink tanks to ensure ink levels do not fall below the lower lines. Continued use of the product when any ink level is below the lower line on the tank could damage the product.

Related Information

➡ "It is Time to Refill the Ink" on page 199

➡ "It is Time to Replace the Maintenance Box" on page 205

Reset the Ink Level

If the ink levels displayed by the printer's control panel does not match the actual ink levels in the ink tanks, reset the ink levels.

1. Select **More** on the printer's control panel.

2. Select **Maintenance** > **Set Ink Level**.

3. Adjust the ink levels as needed to match the ink levels in the ink tanks.

> ***Caution:***
> *To confirm the actual ink remaining, visually check the ink levels in all of the printer's tanks.*

4. Press the button when you have finished adjusting the ink levels.

5. Press the OK button when a message is displayed indicating that setup is complete.

Improving Print, Copy, Scan, and Fax Quality

Adjusting the Print Quality

If you notice blank pages being ejected, misaligned vertical lines, blurred images, or horizontal banding, try **Print Quality Adjustment**.

> ***Important:***
> *Head cleaning may be necessary after performing **Print Quality Adjustment**. Check the following items when performing head cleaning.*
> - *Head cleaning consumes ink and should not be performed more than necessary.*
> - *When ink is low, you may not be able to clean the print head.*
> - *Do not turn off the printer during head cleaning. If the head cleaning is incomplete, you may not be able to print.*

1. Select **More** on the printer's control panel.

2. Select **Maintenance** > **Print Quality Adjustment**.

3. Follow the on-screen instructions to print the adjustment pattern and scan it.

> ***Important:***
> *Close the document cover before scanning.*

Adjustments are performed automatically.

Note:
- *When placing the adjustment pattern on the Scanner glass*

  *Check the paper placed on the scanner glass and select **Start Scanning**. If the paper is folded or out of alignment with the corner mark, it cannot be scanned.*
- *Even if a blank sheet is ejected, follow the on-screen instructions to scan. If you scan a blank sheet of paper, scanning will fail. If this occurs, press the button, and follow the on-screen instructions.*
- *If the problem does not improve even after performing **Print Quality Adjustment**, go to **Maintenance** to perform all available print head adjustments (nozzle check, cleaning, Alignment adjustment). See Related Information for more details.*

Note:
*You can also perform **Print Quality Adjustment** from the printer driver.*

- *Windows*

  *Click **Maintenance** on the **Maintenance** tab, and then select **Print Quality Adjustment**.*

- *Mac OS*

  *Apple menu > **System Preferences** (or **System Settings**) > **Printers & Scanners** (or **Print & Scan**, **Print & Fax**) > Epson(XXXX) > **Options & Supplies** > **Utility** > **Open Printer Utility** > **Print Quality Adjustment***

Related Information

➡ "Checking and Cleaning the Print Head" on page 112
➡ "Aligning the Print Head" on page 116

Checking and Cleaning the Print Head

If the nozzles are clogged, the printouts become faint, there is visible banding, or unexpected colors appear. If the nozzles are severely clogged, a blank sheet will be printed. When print quality has declined, first use the nozzle check feature to check if the nozzles are clogged. If the nozzles are clogged, clean the print head.

Important:

- *Do not open the scanner unit or turn off the printer during head cleaning. If the head cleaning is incomplete, you may not be able to print.*
- *Head cleaning consumes ink and should not be performed more than necessary.*
- *When ink is low, you may not be able to clean the print head.*
- *If print quality has not improved after running a nozzle check and Cleaning alternately 3 times or Power Cleaning once, wait for at least 12 hours without printing (we recommend turning off the printer), and then run a nozzle check. If print quality has still not improved, run Cleaning and a nozzle check again. If it has still not improved, run Power Ink Flushing.*
- *To prevent the print head from drying out, do not unplug the printer while the power is on.*

You can check and clean the print head by using the printer's control panel.

1. Select **More** on the printer's control panel.

   To select an item, use the ◀ ▶ buttons, and then press the OK button.

2. Select **Maintenance** > **Nozzle Check**.

3. Follow the on-screen instructions to load paper and print the nozzle check pattern.

4. Check the printed pattern to see if the print head nozzles are clogged.

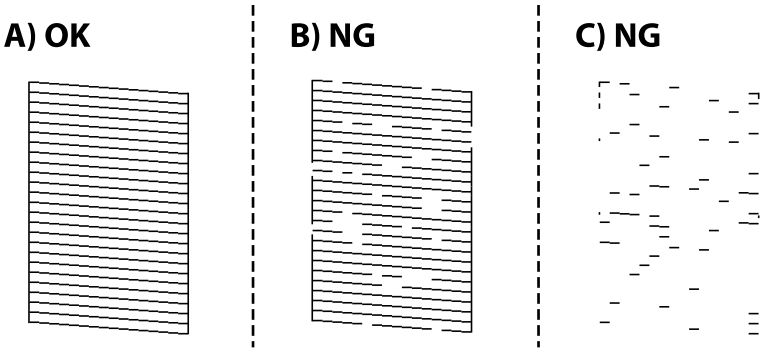

❑ A:

All lines are printed. Select **No**. No further steps are needed.

❑ B or close to B

Some nozzles are clogged. Select **Yes** > **Cleaning**, and then follow the on-screen instructions to clean the print head.

When cleaning is finished, another nozzle check pattern is printed automatically.

❑ C or close to C

If the printout comes out as a blank sheet or more than half of the lines is missing, most of the nozzles are clogged. Select **Yes** > **Power Cleaning**, and then follow the on-screen instructions. When cleaning is finished, another nozzle check pattern is printed automatically.

For details, see "Related information" below.

5. Repeat cleaning and printing the pattern until all lines are printed completely.

Important:

If all nozzle check lines are not printed completely after running a nozzle check and Cleaning alternately three times or Power Cleaning once, wait for at least 12 hours without printing (we recommend turning off the printer), and then run a nozzle check. If all nozzle check lines are not printed completely, run Cleaning and a nozzle check again. If all nozzle check lines are still not printed completely, run Power Ink Flushing.

Note:
You can also check and clean the print head from the printer driver.

❑ *Windows*

*Click **Maintenance** on the **Maintenance** tab, and then select **Print Head Nozzle Check**.*

❑ *Mac OS*

*Apple menu > **System Preferences** (or **System Settings**) > **Printers & Scanners** (or **Print & Scan**, **Print & Fax**) > Epson(XXXX) > **Options & Supplies** > **Utility** > **Open Printer Utility** > **Print Head Nozzle Check***

Related Information

➡ "Running Power Cleaning" on page 114
➡ "Running Power Ink Flushing" on page 115

Running Power Cleaning

The **Power Cleaning** feature may improve print quality in the following cases.

❏ When most nozzles are clogged.

❏ When the printout comes out as a blank sheet.

Before running this feature, use the nozzle check feature to check if the nozzles are clogged, read the following instructions.

> ***Important:***
> *The Power Cleaning uses more ink than the Cleaning.*

1. Select **More** on the printer's control panel.

   To select an item, use the ◀▶ buttons, and then press the OK button.

2. Select **Maintenance** > **Head Cleaning**, and then select **Yes**, you can run the nozzle check. If you select **No**, you can select **Power Cleaning**.

3. Follow the on-screen instructions to run the Power Cleaning feature.

   Note:
   If you cannot run this feature, solve the problems that are displayed on the screen. Next, follow this procedure from step 1 to run this feature again.

4. When Power Cleaning is finished, a nozzle check is printed automatically so you can check whether any nozzles are still clogged.

> ***Important:***
> *If all nozzle check lines are not printed completely after running Power Cleaning, wait for at least 12 hours without printing (we recommend turning off the printer), and then run a nozzle check. If all nozzle check lines are not printed completely, run Cleaning and a nozzle check again. If all nozzle check lines are not printed completely, run Power Ink Flushing.*

Note:
*You can also run **Power Cleaning** from the printer driver.*

❏ *Windows*

Maintenance** tab > **Maintenance** > **Print Head Cleaning** > **Power Cleaning

❏ *Mac OS*

*Apple menu > **System Preferences** (or **System Settings**) > **Printers & Scanners** (or **Print & Scan**, **Print & Fax**) > Epson(XXXX) > **Options & Supplies** > **Utility** > **Open Printer Utility** > **Print Head Cleaning** > **Power Cleaning***

Related Information

➡ "Checking and Cleaning the Print Head" on page 112

➡ "Running Power Ink Flushing" on page 115

Running Power Ink Flushing

The **Power Ink Flushing** utility allows you to replace all of the ink inside the ink tubes. In the following situations, you may need to use this feature to improve the print quality.

❏ You printed or performed head cleaning when the ink levels were too low to be seen in the ink tank windows.

❏ You performed the nozzle check and Cleaning three times or the Power Cleaning once, aited for at least 12 hours without printing, performed the Cleaning again, but all nozzle check lines are still not printed completely.

Before running this process, read the following instructions.

Important:

Make sure that there is enough ink in the ink tanks.

Visually confirm that all ink tanks are at least a third full. Low ink levels during Power Ink Flushing could damage the product.

Important:

Ink will be deposited in the maintenance box. If the maintenance box becomes full, you must prepare and install a replacement maintenance box to continue printing.

Note:
When the ink levels or the free space in the maintenance box are insufficient for Power Ink Flushing, you cannot run this process. Even in this case, there may be enough ink and free space in the maintenance box to continue printing.

1. Select **More** on the printer's control panel.

   To select an item, use the ◀▶ buttons, and then press the OK button.

2. Select **Maintenance** > **Power Ink Flushing**.

3. Follow the on-screen instructions to run the Power Ink Flushing.

   Note:
   If you cannot run this utility, solve the problems that are displayed on the screen. Next, repeat the process from step 1.

4. After running the Power Ink Flushing, run the nozzle check to make sure the nozzles are not clogged.

   For details on how to run the nozzle check, see the related information link below.

Important:

If all nozzle check lines are still not printed completely after running Power Ink Flushing, contact Epson support.

Note:
*You can also run **Power Ink Flushing** from the printer driver.*

❏ *Windows*

*Click **Maintenance** on the **Maintenance** tab, and then select **Power Ink Flushing**.*

❏ *Mac OS*

*Apple menu > **System Preferences (or System Settings)** > **Printers & Scanners** (or **Print & Scan**, **Print & Fax**) > Epson(XXXX) > **Options & Supplies** > **Utility** > **Open Printer Utility** > **Power Ink Flushing***

Related Information

➡ "Checking and Cleaning the Print Head" on page 112

Preventing nozzle clogging

When the power cord is unplugged or a power outage occurs while the printer is in operation, the print head may not be capped properly. If the print head is left as it is, it will dry out and its nozzles (ink outlets) will clog.

Always use the power button when turning the printer on and off.

Check that the power light is off before you disconnect the power cord.

The ink itself can dry out if it is not covered. Just like placing a cap on a fountain pen or an oil pen to prevent it from drying, make sure the print head is capped properly to prevent the ink from drying.

In these cases, turn the printer on and off again as soon as possible to cap the print head.

Aligning the Print Head

If you notice a misalignment of vertical or horizontal lines, or blurred images, align the print head.

1. Select **More** on the printer's control panel.

   To select an item, use the ◀▶ buttons, and then press the OK button.

2. Select **Maintenance** > **Print Head Alignment**.

3. Select one of the alignment menus.

   ❏ If vertical lines look misaligned or the printouts look blurry, select **Vertical Alignment**.

   ❏ If horizontal banding occurs at regular intervals, select **Horizontal Alignment**.

4. Follow the on-screen instructions.

Cleaning the Paper Path for Ink Smears

When the printouts are smeared or scuffed, clean the roller inside.

> ***Important:***
> *Do not use tissue paper to clean the inside of the printer. The print head nozzles may be clogged with lint.*

1. Select **More** on the printer's control panel.

   To select an item, use the ◀▶ buttons, and then press the OK button.

2. Select **Maintenance** > **Paper Guide Cleaning**.

3. Follow the on-screen instructions to load paper and clean the paper path.

4. Repeat this procedure until the paper is not smeared with ink.

Cleaning the Scanner Glass

When the copies or scanned images are smeared, clean the scanner glass.

> ***Caution:***
> *Be careful not to trap your hand or fingers when opening or closing the document cover. Otherwise you may be injured.*

> ***Important:***
> *Never use alcohol or thinner to clean the printer. These chemicals can damage the printer.*

1. Open the document cover.

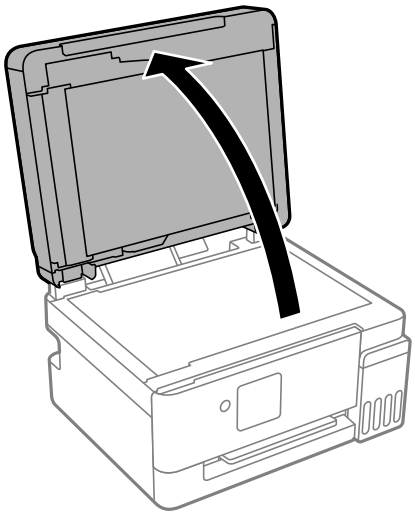

2. Use a soft, dry, clean cloth to clean the scanner glass.

> ***Important:***
> - *If the glass surface is stained with grease or some other hard-to-remove material, use a small amount of glass cleaner and a soft cloth to remove it. Wipe off all remaining liquid.*
> - *Do not press the glass surface too hard.*
> - *Be careful not to scratch or damage the surface of the glass. A damaged glass surface can decrease the scan quality.*

Cleaning the ADF

When the copied or scanned images from the ADF are smeared or the originals do not feed into the ADF correctly, clean the ADF.

> ***Important:***
> *Never use alcohol or thinner to clean the printer. These chemicals can damage the printer.*

1. Open the ADF cover.

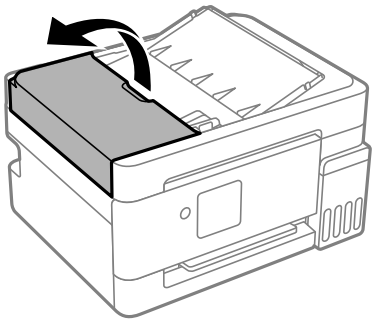

2. Use a soft, moist cloth to clean the rollers and the interior of the ADF.

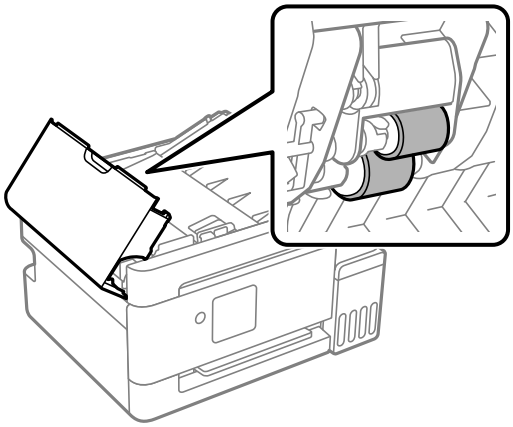

> ***Important:***
> *Using a dry cloth may damage the surfaces of the rollers. Use the ADF after the rollers have dried.*

3. Close the ADF cover, and then open the document cover.

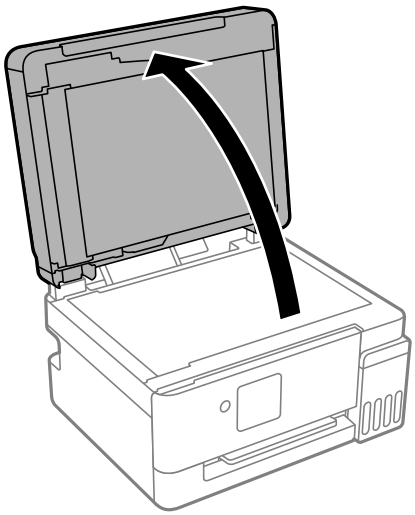

4. Clean the part that is shown in the illustration.

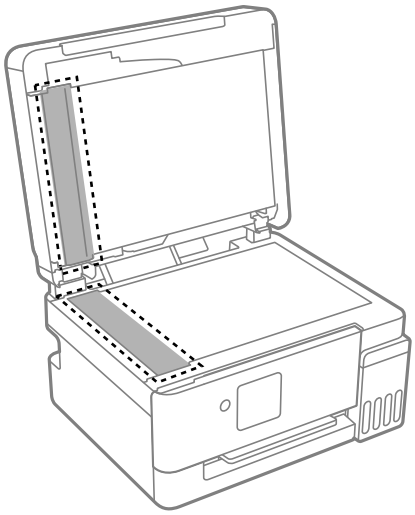

Important:

- ❏ *If the glass surface is stained with grease or some other hard-to-remove material, use a small amount of glass cleaner and a soft cloth to remove it. Wipe off all remaining liquid.*
- ❏ *Do not press the glass surface too hard.*
- ❏ *Be careful not to scratch or damage the surface of the glass. A damaged glass surface can decrease the scan quality.*

5. If the problem cannot be cleared, turn off the printer by pressing the ⏻ button, open the ADF cover, and then raise the ADF input tray.

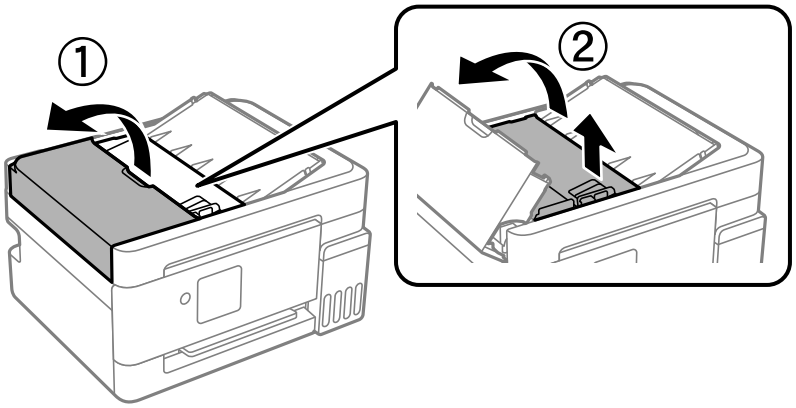

6. Clean the part that is shown in the illustration.

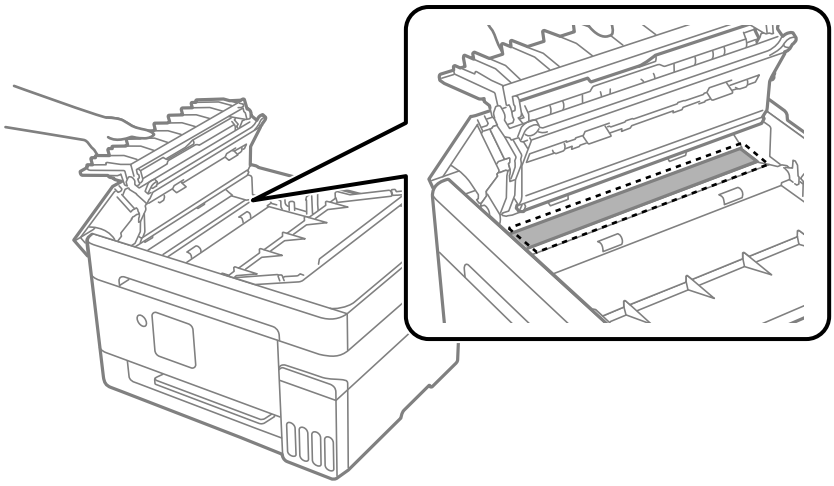

Cleaning the Printer

If the components and the case are dirty or dusty, turn off the printer and clean them using a soft, clean cloth that has been dampened with water. If you cannot remove the dirt, try adding a small amount of mild detergent to the damp cloth.

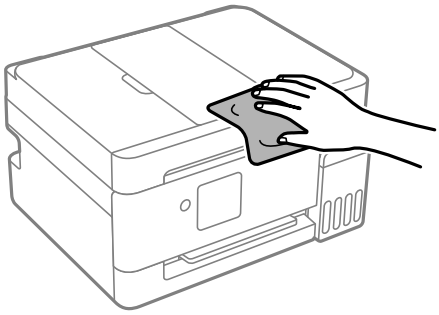

Important:

- ❏ *Be careful not to get water onto the printer mechanism or any electrical components. Otherwise, the printer could be damaged.*
- ❏ *Never use alcohol or thinner to clean the printer. These chemicals can damage the printer.*
- ❏ *Do not touch the parts shown in the following illustration. Doing so may cause a malfunction.*

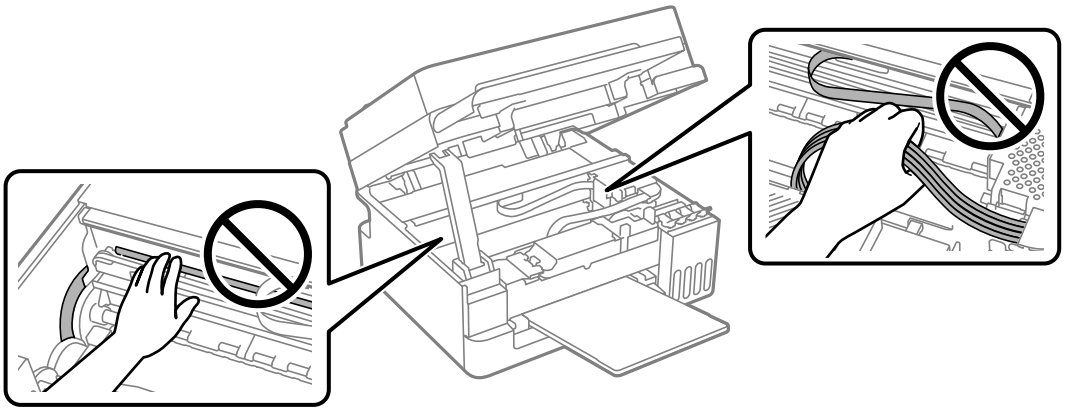

Cleaning Spilled ink

If ink has been spilled, follow these procedures to clean it up.

- ❏ If there is ink residue on the printer, in the area around the tank, wipe it off using a napless, clean cloth or cotton swab.
- ❏ If ink spills on the desk or floor, wipe it off immediately. If the ink dries, it will be difficult to remove. To prevent the spill from spreading, blot the ink with a dry cloth, and then wipe it with a moist cloth.
- ❏ If ink gets on your hands, wash them with water and soap.

In These Situations

When Replacing a Computer. 123

Saving Power. 123

Checking the Total Number of Pages Fed Through the Printer. 124

Installing the Applications Separately. 124

Resetting the Network Connection. 127

Connecting a Device and Printer Directly (Wi-Fi Direct). 139

Adding or Changing the Printer's Connection. 142

Transporting and Storing the Printer. 145

When Replacing a Computer

You need to install the printer driver and other software on the new computer.

U.S. and Canada

Access the following website and search for your product. Download and run your product's software package, then follow the instructions on the computer screen to run the setup program.

https://support.epson.com

Other Regions

Access the following website, and then enter the product name. Go to **Setup**, and then start setting up. Follow the on-screen instructions.

https://epson.sn

Saving Power

The printer enters sleep mode or turns off automatically if no operations are performed for a specified period. You can adjust the time before power management is applied. Any increase will affect the product's energy efficiency. Please consider the environment before making any change.

1. Select **More** on the home screen on the printer's control panel.

   To select an item, use the ◀▶ buttons, and then press the OK button.

2. Select **Settings** > **Printer Setup**.

3. Do one of the following.

   ❏ Select **Sleep Timer** or **Power Off Settings** > **Power Off If Inactive** or **Power Off If Disconnected**.

   ❏ Select **Sleep Timer** or **Power Off Timer**.

   Note:
   *Your product may have the **Power Off Settings** or **Power Off Timer** feature depending on the location of purchase.*

4. Adjust settings as needed.

Disabling your Wi-Fi Connection

If you no longer need to use a Wi-Fi (wireless LAN) connection with your printer, you can disable it.

By removing unnecessary Wi-Fi signals, you can also reduce the load on your standby power.

Note:
For ET-2900U only

The printer must be connected to the Internet in order to function and have its ink usage monitored as part of the ReadyPrint program.

1. Select **Wi-Fi Setup** on the home screen on the printer's control panel.

   To select an item, use the◀▶ buttons, and then press the OK button.

2. Select **Wi-Fi**.
3. Press the OK button.
4. Select **Others** > **Disable Wi-Fi**.

   Follow the on-screen instructions.

Checking the Total Number of Pages Fed Through the Printer

You can check the total number of pages fed through the printer. The information is shown on the nozzle check pattern.

1. Select **More** on the printer's control panel.

   To select an item, use the ◀▶ buttons, and then press the OK button.
2. Select **Maintenance** > **Nozzle Check**.
3. Follow the on-screen instructions to load paper and print the nozzle check pattern.

Note:
You can also use the printer driver to check the total number of pages fed.

- *Windows*

  *Click **Printer and Option Information** on the **Maintenance** tab.*
- *Mac OS*

  *Apple menu > **System Preferences** (or **System Settings**) > **Printers & Scanners** (or **Print & Scan**, **Print & Fax**) > Epson(XXXX) > **Options & Supplies** > **Utility** > **Open Printer Utility** > **Printer and Option Information***

Installing the Applications Separately

Connect your computer to the network and install the latest versions of applications from the website. Log in to your computer as an administrator. Enter the administrator password if the computer prompts you.

Note:
- *When reinstalling an application, you need to uninstall it first.*
- *You can download the latest applications from the Epson website.*

  https://www.epson.com
- *If you use Windows Server operating systems, you cannot use Epson Software Updater. Download the latest applications from the Epson website.*

1. Make sure the printer and the computer are available for communication, and the printer is connected to the Internet.

2. Start Epson Software Updater.

   The screenshot is an example from Windows.

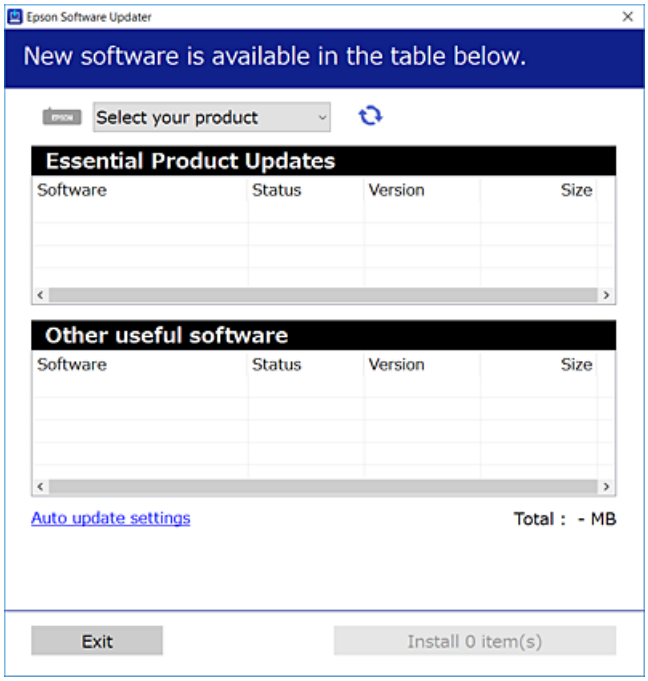

3. Select your printer, and then click to check for the latest available applications.

4. Select the items you want to install or update, and then click the install button.

> ***Important:***
>
> *Do not turn off or unplug the printer until the update is complete. Doing so may result in malfunction of the printer.*

Related Information

➡ "Application for Updating Software and Firmware (Epson Software Updater)" on page 233

Checking if a genuine Epson printer driver is installed - Windows

You can check if a genuine Epson printer driver is installed on your computer by using one of the following methods.

❏ Windows 11/Windows Server 2025

Click on the start button, select **Settings** > **Bluetooth & devices** > **Printers & scanners**, and then click **Print server properties** under **Related settings**.

❑ Windows 10/Windows 8.1/Windows 8/Windows 7/Windows Server 2022/Windows Server 2019/Windows Server 2016/Windows Server 2012 R2/Windows Server 2012/Windows Server 2008 R2

Select **Control Panel** > **View devices and printers** (**Printers**, **Printers and Faxes**) in **Hardware and Sound**, click the printer icon, and then click **Print server properties** at the top of the window.

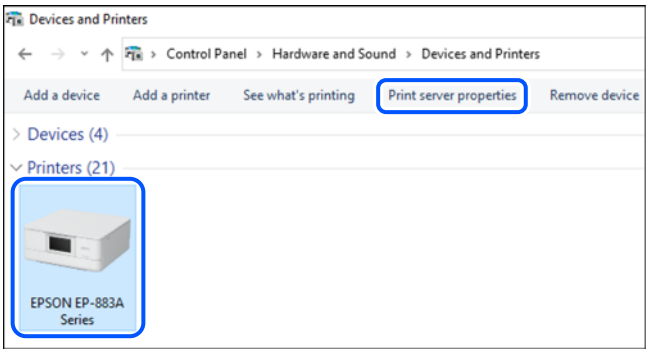

❑ Windows Server 2008

Right-click on the **Printers** folder, and then click **Run as administrator** > **Server Properties**.

Click the **Drivers** tab. If your printer name is displayed in the list, a genuine Epson printer driver is installed on your computer.

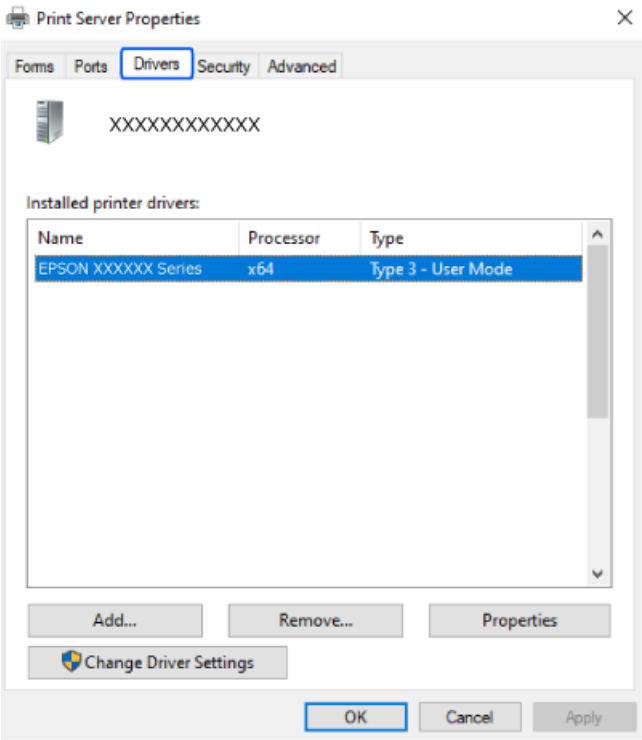

Related Information

➡ "Installing the Applications Separately" on page 124

Checking if a genuine Epson printer driver is installed - Mac OS

You can check if a genuine Epson printer driver is installed on your computer by using one of the following methods:

Select **System Preferences** (or **System Settings**) from the Apple menu > **Printers & Scanners** (or **Print & Scan** or **Print & Fax**), and then select the printer. If the **Options** and **Utility** tabs are displayed when you click **Options & Supplies**, and an **Open Printer Utility** button is displayed when you click the **Utility** tab, then a genuine Epson printer driver is already installed on your computer.

Related Information

➡ "Installing the Applications Separately" on page 124

Resetting the Network Connection

The printer's network settings need to be adjusted in the following cases.

- ❏ When using a printer with a network connection
- ❏ Your network environment has changed
- ❏ You replaced the wireless router
- ❏ You changed the way the printer connects to the computer (for example, switching from a USB connection to a Wi-Fi connection)

Adjusting Settings When Connecting to a Computer

You can run the installer using one of the following methods.

Setting up from the website

U.S. and Canada

Access the following website and search for your product. Download and run your product's software package, then follow the instructions on the computer screen to run the setup program.

https://support.epson.com

Other Regions

Access the following website, and then enter the product name. Go to **Setup**, and then start setting up.

https://epson.sn

You can also watch the procedure in the Web Video Manuals. Access the following website.

https://support.epson.net/publist/vlink.php?code=NPD7415

Setting up using the software disc

If your printer came with a software disc and you are using a Windows computer with a disc drive, insert the disc into the computer, and then follow the on-screen instructions.

Adjusting Settings When Connecting to a Mobile Device

You can use the printer from your mobile device when they are connected to the same wireless network.

U.S. and Canada

Make sure you have the following.

- ❏ A mobile device that is connected to the wireless network, has Bluetooth enabled, and has the Epson Smart Panel app installed (Epson Smart Panel is available for iOS and Android devices.)
- ❏ The wireless network name (SSID) and password

Note:
Your mobile device must be close enough to the printer to create and maintain a Bluetooth connection.

1. Make sure the product is turned on and ready to print.

   Note:
   You must perform initial setup and ink installation before setting up wireless printing

2. Open the Epson Smart Panel app.

3. Do one of the following.

   - ❏ If the app automatically recognizes the product, follow the on-screen instructions to set up the wireless connection.
   - ❏ If the app does not automatically recognize the product, select the + icon, select the option to set up a new product, and follow the on-screen instructions.

Other Regions

To set up a new connection, access the following website from the mobile device that you want to connect to the printer. Enter the product name, go to Setup, and then start the setup.

https://epson.sn

You can watch the procedure in the Web Video Manuals. Access the following website.

https://support.epson.net/publist/vlink.php?code=VC00006

Note:
If you have already set up the connection between your mobile device and the printer but need to reconfigure it, you can do so from an app such as Epson Smart Panel.

Related Information

➡ "Printing Documents from Mobile Devices" on page 56

Configuring Wi-Fi Settings from the Control Panel

If you are not using a computer or mobile device to set up the printer connection, you can do so on the control panel.

You can select network settings from the printer's control panel in several ways. Choose the connection method that matches the environment and conditions that you are using.

If you know the SSID and password for your wireless router, you can set them manually.

Related Information

➡ "Configuring Wi-Fi Settings by Entering the SSID and Password" on page 129
➡ "Configuring Wi-Fi Settings Using Push Button Setup (WPS)" on page 130
➡ "Making Wi-Fi Settings by PIN Code Setup (WPS)" on page 131

Configuring Wi-Fi Settings by Entering the SSID and Password

You can set up a Wi-Fi connection by entering the necessary information from the printer's control panel. To set up using this method, you need the SSID and password for your wireless router.

Note:
If you are using an wireless router with its default settings, the SSID and password are on the label. If you do not know the SSID and password, contact the person who set up the wireless router, or see the documentation provided with the wireless router.

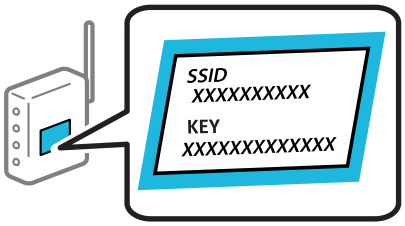

1. Select **Wi-Fi Setup** on the home screen on the printer's control panel.

   To select an item, use the◀▶ buttons, and then press the OK button.

2. Select **Wi-Fi**.

3. Press the OK button to proceed.

4. Select **Wi-Fi Setup Wizard**.

5. Select the SSID for the wireless router from printer's control panel, and then press the OK button.

   Note:

   ❑ *If the SSID you want to connect to is not displayed on the printer's control panel, press the button to update the list. If it is still not displayed, select* ***Other SSIDs****, and then enter the SSID directly.*

   ❑ *If you do not know the network name (SSID) check if the information is written on the label on the wireless router. If you are using the wireless router with its default settings, use the SSID on the label. If you cannot find any information, see the documentation provided with the wireless router.*

   ❑ *If the SSID you want to connect to is not displayed, make Wi-Fi settings using software or apps on your computer or mobile device.*

   U.S. and Canada

   Access the following website and search for your product. Download and run your product's software package, then follow the instructions on the computer screen to run the setup program.

   https://support.epson.com

   Other Regions

   Access the following website, and then enter the product name. Go to ***Setup****, and then start setting up.*

   https://epson.sn

6. Enter the password.

   Select whether or not you print a network connection report after finishing the settings.

   Note:
   The password is case-sensitive.

7. When you have completed setup, press the OK button.

   Note:
   If you fail to connect, load paper, and then press the button to print a network connection report.

Related Information

➡ "Checking the Printer's Network Connection Status (Network Connection Report)" on page 132
➡ "Adjusting Settings When Connecting to a Computer" on page 127
➡ "Adjusting Settings When Connecting to a Mobile Device" on page 128

Configuring Wi-Fi Settings Using Push Button Setup (WPS)

You can automatically connect to a wireless router by pressing a button on the wireless router, if the following conditions are met.

❑ The wireless router is compatible with WPS (Wi-Fi Protected Setup).

❑ The current Wi-Fi connection was established by pressing a button on the wireless router.

1. Select **Wi-Fi Setup** on the home screen on the printer's control panel.

   To select an item, use the ◀ ▶ buttons, and then press the OK button.

2. Select **Wi-Fi**.

3. Press the OK button to proceed.

4. Select **Push Button Setup (WPS)**.

5. Hold down the [WPS] button on the wireless router until the security light flashes.

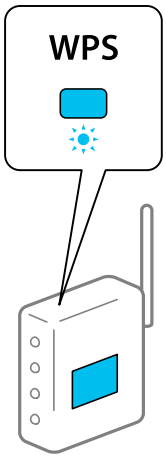

If you do not know where the [WPS] button is, or there are no buttons on the wireless router, see the documentation provided with your wireless router for details.

6. Press the OK button on the printer's control panel, and then follow the on-screen instructions.

Note:
If connection fails, restart the wireless router, move it closer to the printer, and try again. If it still does not work, print a network connection report and check the solution.

Related Information

➡ "Checking the Printer's Network Connection Status (Network Connection Report)" on page 132

Making Wi-Fi Settings by PIN Code Setup (WPS)

You can automatically connect to a wireless router by using a PIN code. You can use this method to set up if an wireless router is capable of WPS (Wi-Fi Protected Setup). Use a computer to enter a PIN code into the wireless router.

1. Select **Wi-Fi Setup** on the home screen on the printer's control panel.

   To select an item, use the◀▶ buttons, and then press the OK button.

2. Select **Wi-Fi**.

3. Press the OK button to proceed.

4. Select **Others**.

5. Select **PIN Code (WPS)**.

6. Use your computer to send the PIN code (an eight digit number) displayed on the printer's control panel to the wireless router within two minutes.

   Note:
   See the documentation provided with your wireless router for details on entering a PIN code.

7. Press the OK button on the printer.

   Setup is complete when the setup completion message is displayed.

   Note:
   If connection fails, restart the wireless router, move it closer to the printer, and try again. If it still does not work, print a connection report and check the solution.

Related Information

➡ "Checking the Printer's Network Connection Status (Network Connection Report)" on page 132

Checking the Printer's Network Connection Status (Network Connection Report)

You can print a report to check the status of the network connection between the printer and the router.

1. Load paper in the printer.

   "Loading Paper in the Rear Paper Feeder" on page 32

2. Select **More** on the home screen on the printer's control panel.

   To select an item, use the◀▶ buttons, and then press the OK button.

3. Select **Settings**.

   To select an item, use the▲▼ buttons, and then press the OK button.

4. Select **Network Settings** > **Connection Check**.

   The connection check starts.

5. Follow the instructions on the printer's screen to print the network connection report.

   If an error has occurred, check the network connection report and review the possible causes and solutions.

Messages and Solutions on the Network Connection Report

Check the messages and error codes on the Network Connection Report, and then follow the solutions.

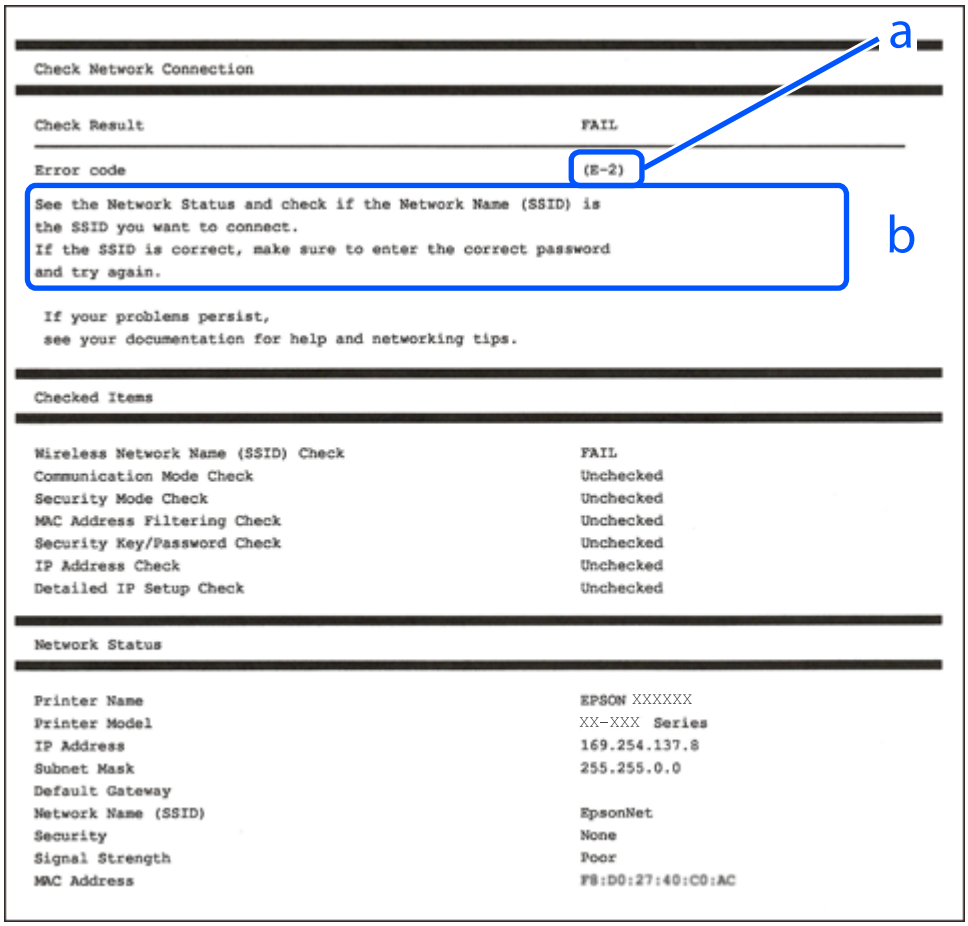

a. Error code

b. Network Environment Message

Related Information

- ➡ "E-1" on page 134
- ➡ "E-2, E-3, E-7" on page 134
- ➡ "E-5" on page 135
- ➡ "E-6" on page 135
- ➡ "E-8" on page 135
- ➡ "E-9" on page 136
- ➡ "E-10" on page 136
- ➡ "E-11" on page 137
- ➡ "E-12" on page 137
- ➡ "E-13" on page 138
- ➡ "Network Environment Messages" on page 138

E-1

Solutions:

- ❏ Make sure the Ethernet cable is securely connected to your printer and to your hub or other network device.
- ❏ Make sure your hub or other network device is turned on.
- ❏ If you want to set up a Wi-Fi connection, reselect the Wi-Fi settings because they are currently disabled.

Related Information

➡ "Configuring Wi-Fi Settings from the Control Panel" on page 129

E-2, E-3, E-7

Solutions:

- ❏ Make sure your wireless router is turned on.
- ❏ Confirm that your computer or device is connected correctly to the wireless router.
- ❏ Turn off the wireless router. Wait for about 10 seconds, and then turn it on.
- ❏ Place the printer closer to your wireless router and remove any obstacles between them.
- ❏ If you have entered the SSID manually, check if it is correct. Check the SSID from the **Network Status** section of the network connection report.
- ❏ If a wireless router has multiple SSIDs, select the SSID that is displayed. If the SSID is using a non-compliant frequency, the printer will not display it.
- ❏ If you are using push button setup to establish a network connection, make sure your wireless router supports WPS. You cannot use push button setup if your wireless router does not support WPS.
- ❏ Make sure you know your SSID and password before connecting to the wireless router. If you are using a wireless router with its default settings, the SSID and password are located on a label on the wireless router. If you do not know your SSID and password, contact the person who set up the wireless router, or see the documentation provided with the wireless router.
- ❏ If you are connecting to an SSID generated from a tethering mobile device, check for the SSID and password in the documentation provided with the mobile device.
- ❏ If your Wi-Fi connection suddenly disconnects, check for the conditions below. If any of these conditions are applicable, reset your network settings by downloading and running the software from the following website.

  https://support.epson.com (U.S. and Canada)

  https://epson.sn > **Setup** (Other regions)

  - ❏ A mobile device was added to the network using push button setup.
  - ❏ The printer was connected to the network using any method other than push button setup.
  - ❏ The wireless router was replaced.

Related Information

➡ "Resetting the Network Connection" on page 127
➡ "Configuring Wi-Fi Settings from the Control Panel" on page 129

E-5

Solutions:

- ❏ Make sure the wireless router's security type is set to one of the options below. If it is set to anything else, change the security type on the wireless router.
  - ❏ WEP-64 bit (40 bit)
  - ❏ WEP-128 bit (104 bit)
  - ❏ WPA PSK (TKIP/AES)*
  - ❏ WPA2 PSK (TKIP/AES)*
  - ❏ WPA3-SAE (AES)

* WPA PSK is also known as WPA Personal. WPA2 PSK is also known as WPA2 Personal.

- ❏ Turn off the wireless router. Wait for about 10 seconds, and then turn it on.
- ❏ Reconfigure the printer's network settings.

E-6

Solutions:

- ❏ If MAC address filtering is enabled, register the printer's MAC address so that it is not filtered. See the documentation provided with the wireless router for details. You can check the printer's MAC address from the **Network Status** section of the Network Connection Report.
- ❏ If your wireless router is using shared authentication with WEP security, make sure the authentication key and index are correct.
- ❏ If the number of connections allowed on the wireless router is less than the number of devices that you want to connect, reconfigure settings on the wireless router to increase the number of connections allowed. See the documentation provided with the wireless router for details.
- ❏ Turn off the wireless router. Wait for about 10 seconds, and then turn it on.
- ❏ Reconfigure the printer's network settings.

Related Information

➡ "Adjusting Settings When Connecting to a Computer" on page 127

E-8

Solutions:

- ❏ If the wireless router's DHCP is enabled, set the printer's TCP/IP settings to Auto.
- ❏ If the printer's Obtain IP Address setting is set to Manual, the IP address you manually set is invalid because it is out of range (for example: 0.0.0.0). Enter a valid IP address from the printer's control panel.
- ❏ Turn off the wireless router. Wait for about 10 seconds, and then turn it on.
- ❏ Reconfigure the printer's network settings.

Related Information

➡ "Setting a Static IP Address for the Printer" on page 144

E-9

Solutions:

Confirm the following:

❏ The devices are turned on.

❏ You can access the Internet and other computers or network devices on the same network from the devices you want to connect to the printer.

If your printer and network devices still do not connect after confirming the above, try the following.

❏ Turn off the wireless router. Wait for about 10 seconds, and then turn it on.

❏ Configure network settings from a computer on the same network as the printer by downloading and running the software from the following website.

https://support.epson.com (U.S. and Canada)

https://epson.sn > **Setup** (Other regions)

If the problem continues to occur, check the IP address of the printer listed in the Network Connection Report and contact your router manufacturer.

Related Information

➡ "Adjusting Settings When Connecting to a Computer" on page 127

E-10

Solutions:

Confirm the following:

❏ Other devices on the network are turned on.

❏ The network addresses (IP address, subnet mask, and default gateway) are correct if you have set the printer's Obtain IP Address setting set to Manual.

Reset the network addresses if they are incorrect. You can check the IP address, subnet mask, and default gateway from the **Network Status** section on the network connection report.

If DHCP is enabled, change the printer's Obtain IP Address setting to Auto. If you want to set the IP address manually, check the printer's IP address from the **Network Status** section of the network connection report, and then select Manual on the network settings screen. Set the subnet mask to [255.255.255.0].

If your printer and network devices still do not connect after confirming the above, try the following.

❏ Turn off the wireless router. Wait for about 10 seconds, and then turn it on.

❏ Configure network settings from a computer on the same network as the printer by downloading and running the software from the following website.

https://support.epson.com (U.S. and Canada)

https://epson.sn > **Setup** (Other regions)

Related Information

➡ "Setting a Static IP Address for the Printer" on page 144

E-11

Solutions:

Confirm the following:

❏ The default gateway address is correct if you set the printer's TCP/IP Setup setting to Manual.

❏ The device that is set as the default gateway is turned on.

Set the correct default gateway address. You can check the default gateway address from the **Network Status** section on the network connection report.

If your printer and network devices still do not connect after confirming the above, try the following.

❏ Turn off the wireless router. Wait for about 10 seconds, and then turn it on.

❏ Configure network settings from a computer on the same network as the printer by downloading and running the software from the following website.

https://support.epson.com (U.S. and Canada)

https://epson.sn > **Setup** (Other regions)

Related Information

➡ "Setting a Static IP Address for the Printer" on page 144

E-12

Solutions:

Confirm the following:

❏ Other devices on the network are turned on.

❏ The network addresses (IP address, subnet mask, and default gateway) are correct if you are entering them manually.

❏ The network addresses for other devices (subnet mask and default gateway) are the same.

❏ The IP address does not conflict with other devices.

If your printer and network devices still do not connect after confirming the above, try the following.

❏ Turn off the wireless router. Wait for about 10 seconds, and then turn it on.

❏ Configure network settings again using the installer. You can run it from the following website.

https://support.epson.com (U.S. and Canada)

https://epson.sn > **Setup** (Other regions)

❏ You can register several passwords on a wireless router that uses the WEP security type. If several passwords are registered, check if the first registered password is entered in the printer.

Related Information

➡ "Setting a Static IP Address for the Printer" on page 144

E-13

Solutions:

Confirm the following:

❏ Network devices such as a wireless router, hub, and router are turned on.

❏ The TCP/IP Setup for network devices has not been done manually. (If the printer's TCP/IP Setup is done automatically while the TCP/IP Setup for other network devices is done manually, the printer's network may differ from the network for other devices.)

If it still does not work after checking the above, try the following.

❏ Turn off the wireless router. Wait for about 10 seconds, and then turn it on.

❏ Configure network settings from a computer on the same network as the printer by downloading and running the software from the following website.

https://support.epson.com (U.S. and Canada)

https://epson.sn > **Setup** (Other regions)

❏ You can register several passwords on a wireless router that uses the WEP security type. If several passwords are registered, check if the first registered password is entered in the printer.

Related Information

➡ "Adjusting Settings When Connecting to a Computer" on page 127
➡ "Setting a Static IP Address for the Printer" on page 144

Network Environment Messages

Message	Solution
The Wi-Fi environment needs to be improved. Turn the wireless router off and then turn it on. If the connection does not improve, see the documentation for the wireless router.	After moving the printer closer to the wireless router and removing any obstacles between them, turn off the wireless router. Wait for about 10 seconds, and then turn it on. If it still does not connect, see the documentation supplied with the wireless router.
*No more devices can be connected. Disconnect one of the connected devices if you want to add another one.	You have connected the maximum number of devices allowed via the printer's Wi-Fi Direct (Simple AP) connection. To add another computer or mobile device, disconnect one of the connected devices. You can confirm the number of devices that can be connected simultaneously and the number of connected devices by checking the network status sheet or the printer's control panel.
The same SSID as Wi-Fi Direct exists in the environment. Change the Wi-Fi Direct SSID if you cannot connect a mobile device to the printer.	On the printer's control panel, go to the Wi-Fi Direct Setup screen and select the menu to change the setting. You can change the part of the network name that after DIRECT-XX-. The network name must be 22 characters or less.

Connecting a Device and Printer Directly (Wi-Fi Direct)

Wi-Fi Direct (Simple AP) allows you to connect a device directly to the printer without a wireless router and print from the device.

Note:
For ET-2900U only

The printer must be connected to the Internet in order to function and have its ink usage monitored as part of the ReadyPrint program. Using Wi-Fi Direct is not recommended.

About Wi-Fi Direct

Use this connection method when you are not using Wi-Fi at home or at the office, or when you want to connect the printer and the computer or mobile devices directly. In this mode, the printer acts as a wireless router and you can connect the devices to the printer without having to use a standard wireless router. However, devices directly connected to the printer cannot communicate with each other through the printer.

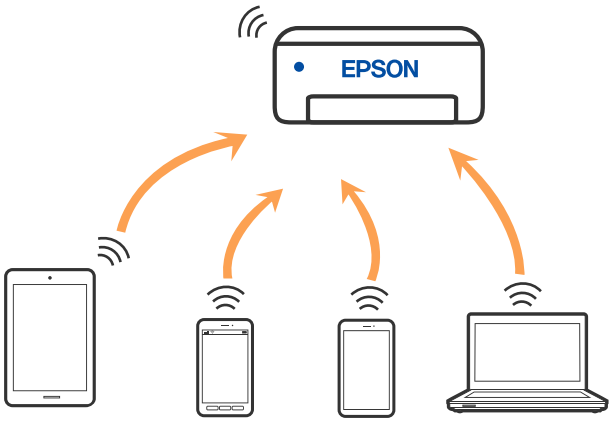

The printer can be connected by Wi-Fi or Ethernet, and Wi-Fi Direct (Simple AP) connection simultaneously. However, if you start a network connection in Wi-Fi Direct (Simple AP) connection when the printer is connected by Wi-Fi, the Wi-Fi is temporarily disconnected.

Connecting to Devices using Wi-Fi Direct

This method allows you to connect the printer directly to devices without a wireless router.

Note:
For iOS or Android users, it is convenient to set up from Epson Smart Panel.

You only need to configure these settings for the printer and the device that you want to connect to once. Unless you disable Wi-Fi Direct or restore the network settings to their defaults, you do not need to configure these settings again.

1. Select **Wi-Fi Setup** on the home screen on the printer's control panel.

   To select an item, use the◀▶ buttons, and then press the OK button.

2. Select **Wi-Fi Direct**.

3. Check the message, and then press the OK button to proceed.

4. Check the next message, and then press the OK button to proceed.

5. Scroll down the printer screen to display the SSID and password required to set up the connection. On your device, select the same SSID.

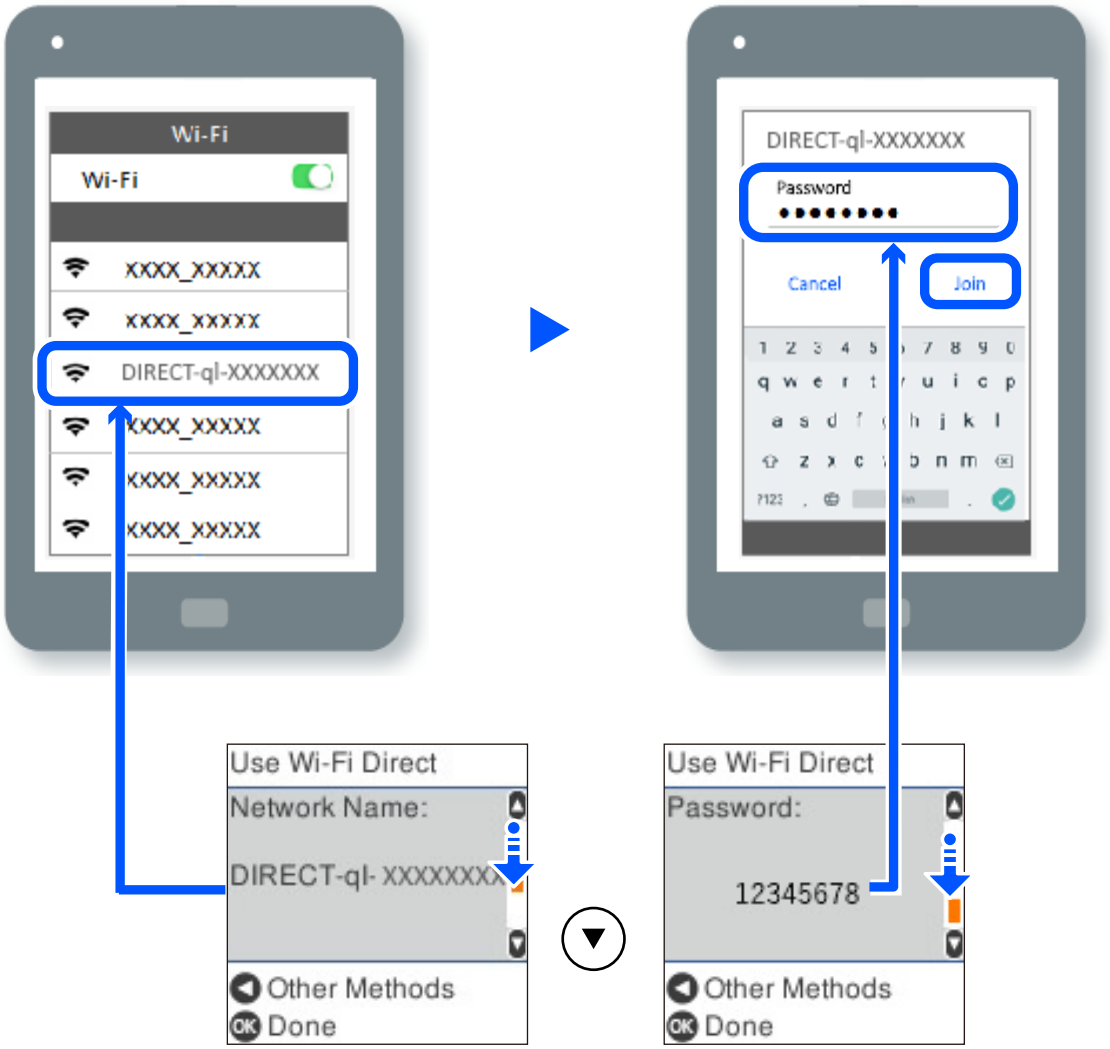

6. On the printer's control panel, press the OK button.

7. On the device's printing app screen, select the printer that you want to connect to.

For devices that have been connected to the printer before, select the network name (SSID) on the mobile device's Wi-Fi screen to connect them again.

Disconnecting Wi-Fi Direct (Simple AP) Connection

There are two methods available to disable a Wi-Fi Direct (Simple AP) connection; you can disable all connections by using the printer's control panel, or disable each connection from the computer or the mobile device. This section explains how to disable all connections.

Important:

When Wi-Fi Direct (Simple AP) connection disabled, all computers and mobile devices connected to the printer in Wi-Fi Direct (Simple AP) connection are disconnected.

Note:
If you want to disconnect a specific device, disconnect from the device instead of the printer. Use one of the following methods to disconnect the Wi-Fi Direct (Simple AP) connection from the device.

- *Disconnect the Wi-Fi connection to the printer's network name (SSID).*
- *Connect to another network name (SSID).*

1. Select **Wi-Fi Setup** on the home screen on the printer's control panel.

   To select an item, use the◀▶ buttons, and then press the OK button.

2. Select **Wi-Fi Direct**.

3. Check the message, and then press the OK button to proceed.

4. Check the next message, and then press the OK button to proceed.

5. Press the button to display the setting screen.

6. Select **Disable Wi-Fi Direct**.

7. Review the message, and then press the OK button.

Changing Wi-Fi Direct (Simple AP) Settings

When a Wi-Fi Direct (Simple AP) connection is enabled, you can change the Wi-Fi Direct settings such as the network name and the password.

1. Select **Wi-Fi Setup** on the home screen on the printer's control panel.

   To select an item, use the◀▶ buttons, and then press the OK button.

2. Select **Wi-Fi Direct**.

3. Check the message, and then press the OK button to proceed.

4. Check the next message, and then press the OK button to proceed.

5. Press the button to display the setting screen.

6. Select the menu item that you want to change.

   You can select the following menu items.

   - **Change Network Name**

     Change the Wi-Fi Direct (simple AP) network name (SSID) to a name of your choice. You can enter the network name (SSID) using ASCII characters displayed on the software keyboard on the control panel.

     When changing the network name (SSID), all connected devices are disconnected. Use the new network name (SSID) if you want to reconnect the devices.

❏ **Change Password**

Change the Wi-Fi Direct (simple AP) password o a password of your choice. You can enter the password using ASCII characters displayed on the software keyboard on the control panel.

When changing the password, all connected devices are disconnected. Use the new password if you want to reconnect the devices.

❏ **Disable Wi-Fi Direct**

Disable the printer's Wi-Fi Direct (simple AP) feature. When you do this, all devices connected to the printer in Wi-Fi Direct (Simple AP) connection are disconnected.

❏ **Restore Default Settings**

Restore all Wi-Fi Direct (simple AP) settings to their defaults.

Any saved Wi-Fi Direct (simple AP) connection information about connected devices is deleted.

7. Follow the on-screen instructions.

Adding or Changing the Printer's Connection

To Set Up a Printer on Multiple Computers

Although several computers can be connected to the same wireless router, each computer may be assigned a different SSID.

If the SSIDs assigned by the wireless router are not handled as the same network, then each computer is effectively connected to a different network. When you start setting up the printer from computer A, the printer is added to the same network as computer A allowing computer A to print from it.

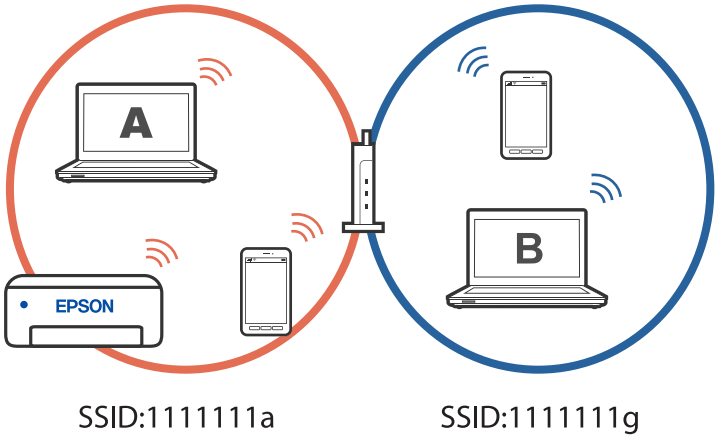

Furthermore, if you start setting up the printer from computer B in the configuration shown above, the printer is set up on computer B's network allowing computer B to print but not computer A.

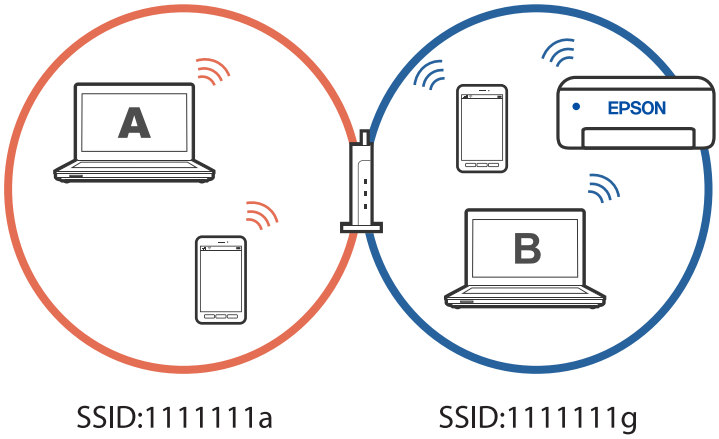

To prevent this from happening, when you want to connect the printer to a second computer, make sure the second computer is on the same network as the printer before you begin setup.

Changing the Connection from Wi-Fi to USB

Follow the steps below if the Wi-Fi you are using is unstable, or if you want to change to a more stable USB connection.

1. Connect the printer to a computer using a USB cable.

2. When you print, select the printer whose name does not end with "(Network)" or the printer name in parentheses.

   Example of Windows 11

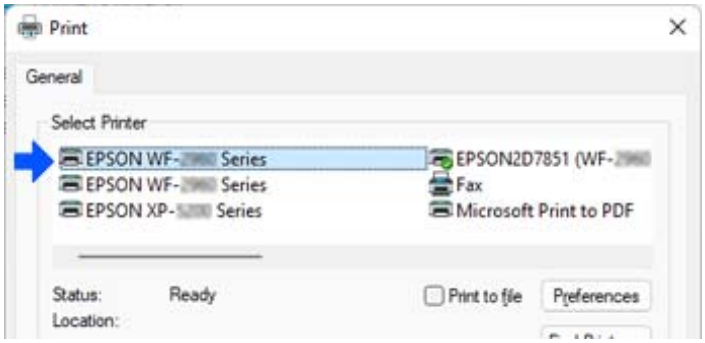

   Example of Windows 10

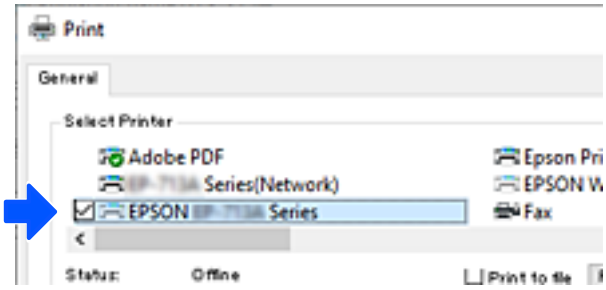

Changing the Network Connection from Wi-Fi to Ethernet

Follow the steps below to change the network connection to Ethernet from Wi-Fi using the control panel.

This function is only available for ET-4900 Series/L5390 Series.

1. Connect the printer to a router using an Ethernet cable.

2. Disable the Wi-Fi from the printer's control panel.

Related Information

➡ "Disabling your Wi-Fi Connection" on page 123
➡ "Rear" on page 21

Setting a Static IP Address for the Printer

You can set up a static IP address for the printer using Web Config.

1. Access Web Config.

   "Running Web Config on a Web Browser" on page 233

2. Select **Network Settings**.

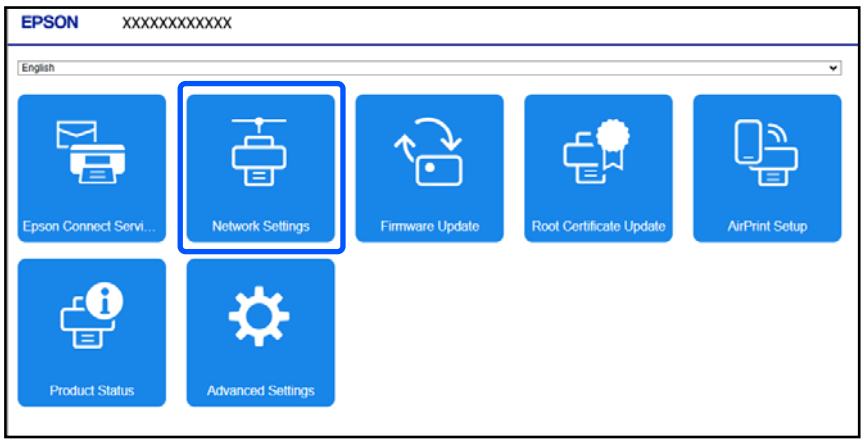

   The display contents and items for Web Config differ depending on the model.

3. Select **Manual** for **Obtain IP Address**.

4. Enter the IP Address you are setting up in **IP Address**.

   Set the subnet mask, default gateway, DNS server, and other network settings set to according to your network environment.

5. Click **OK**.

   If a login password entry screen is displayed, enter the password and click **OK**.

   The settings are applied.

   To access Web Config again, specify the IP address you set.

Related Information

➡ "Application for Configuring Printer Operations (Web Config)" on page 232
➡ "Default Value of the Administrator Password" on page 16

Enabling Energy Efficient Ethernet

The printer's Energy Efficient Ethernet feature is compliant with IEEE802.3az.

This setting is only available on models with wired LAN functionality.

When using this function, enable IEEE802.3az for the printer. All devices connected to the network should support this function.

1. Access Web Config.

   "Running Web Config on a Web Browser" on page 233

2. Log on as an administrator from **Advanced Settings**.

   Note:
   The administrator password is set in advance for the advanced settings in Web Config. See the link below for details on the administrator password.

3. Select **Network** tab > **Wired LAN**.

4. Select **ON** for **IEEE 802.3az**.

5. Click **Next**.

6. Click **OK**.

Related Information

➡ "Application for Configuring Printer Operations (Web Config)" on page 232
➡ "Default Value of the Administrator Password" on page 16

Transporting and Storing the Printer

When you need to store the printer or transport it when moving or for repairs, follow the steps below to pack the printer.

1. Turn off the printer by pressing the ⏻ button.

2. Make sure the power light turns off, and then unplug the power cord.

   > ***Important:***
   > *Unplug the power cord when the power light is off. Otherwise, the print head will not return to the home position, which can cause the ink to dry and make printing impossible.*

3. Disconnect all cables such as the power cord and USB cable.

4. Remove all of the paper from the printer.

5. Make sure there are no originals on the printer.

> ⚠ ***Caution:***
>
> *Be careful not to trap your hand or fingers when opening or closing the scanner unit. Otherwise you may be injured.*

6. Open the scanner unit until it clicks.

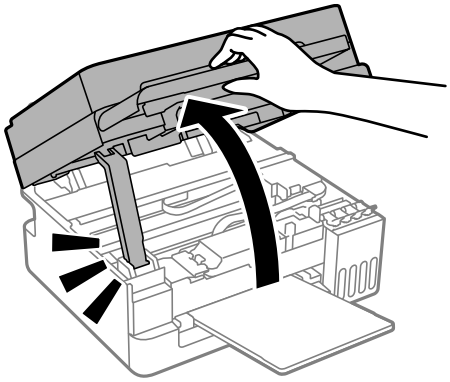

7. Make sure the ink tank caps are closed securely.

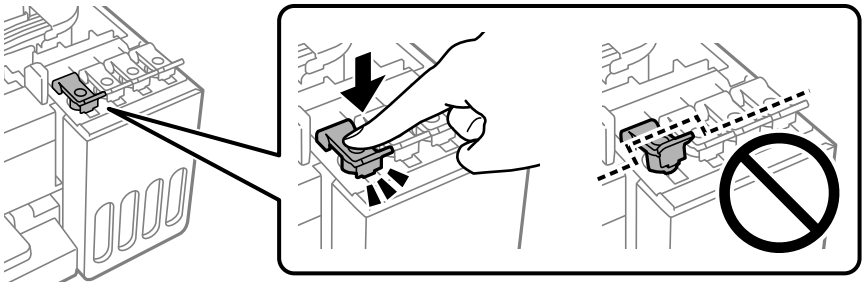

8. Close the scanner unit.

   For safety, the scanner unit is closed in two steps.

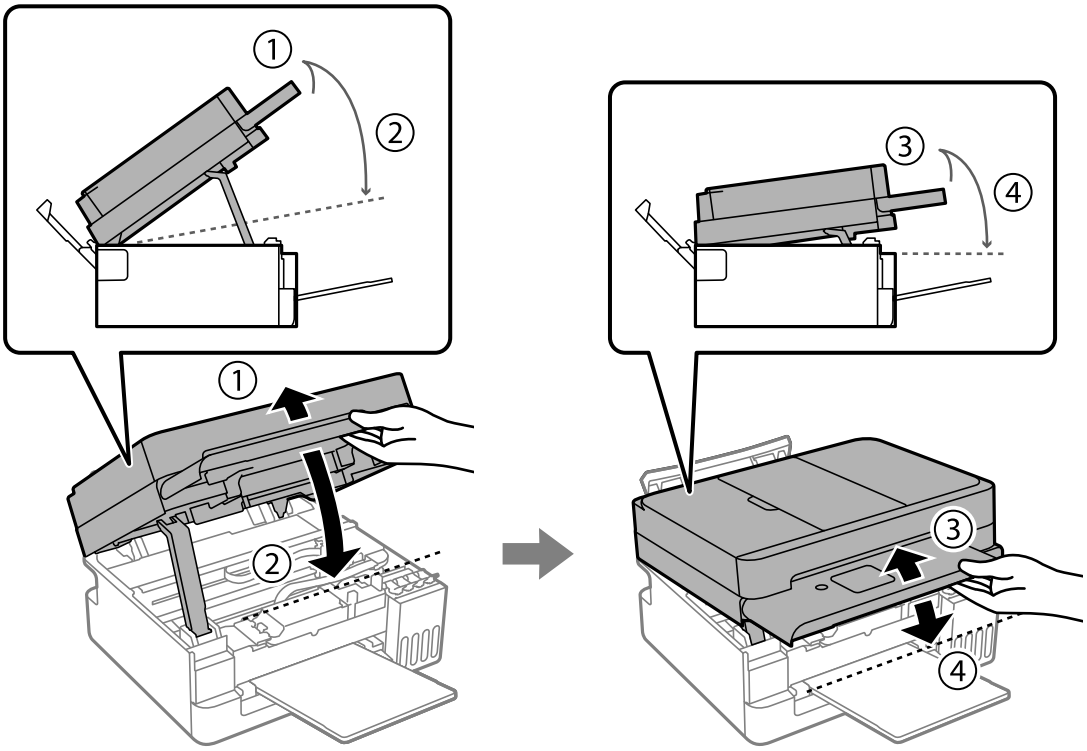

Note:
The scanner unit must be closed completely before it can be opened again.

9. Prepare the printer for transport as shown below.

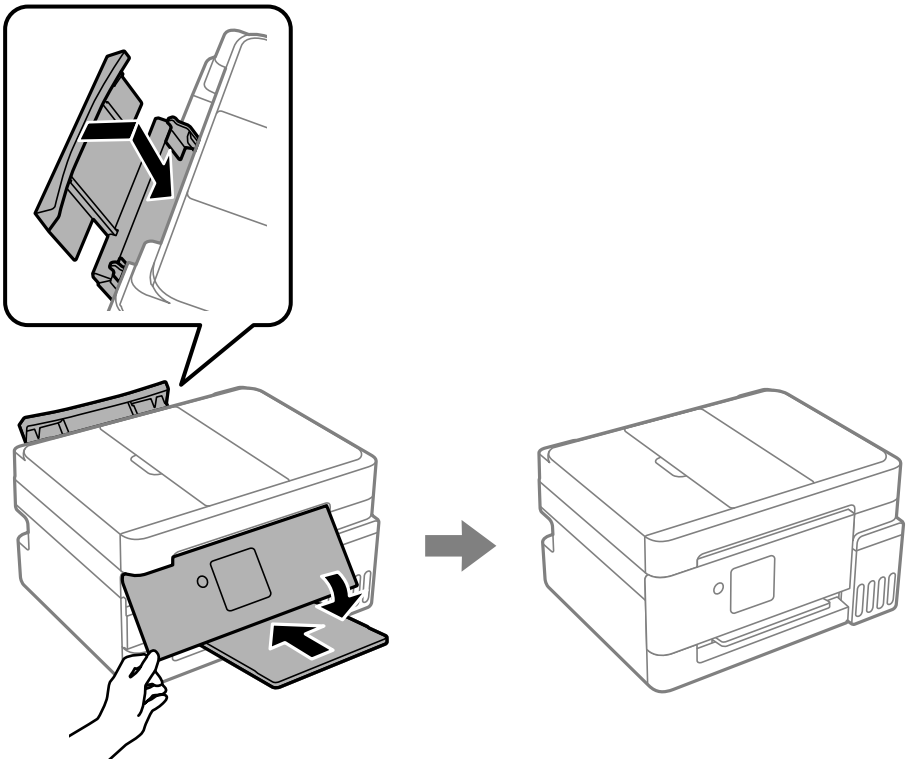

10. Place the printer in a plastic bag and seal the bag.

11. Pack the printer in its box using protective materials.

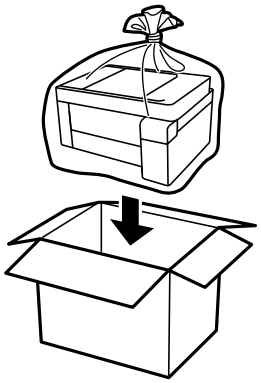

Important:

- *When storing or transporting the printer, place the printer in the plastic bag and seal the bag. Avoid tilting the printer, placing it vertically, or turning it upside down; otherwise ink may leak.*

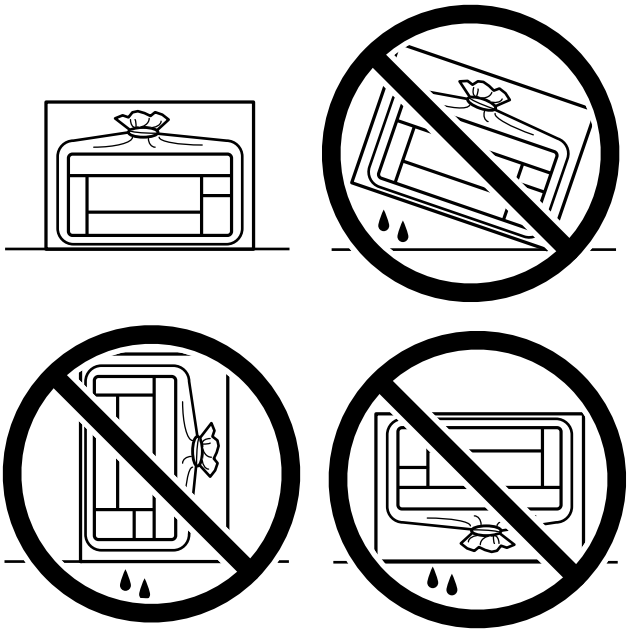

- *When storing or transporting an ink bottle, do not tilt the bottle and do not subject it to impacts or temperature changes. Otherwise, ink may leak even if the cap on the ink bottle is tightened securely. Be sure to keep the ink bottle upright when tightening the cap, and take precautions to prevent ink from leaking when transporting the bottle, such as putting the bottle in a bag.*
- *Do not put opened ink bottles in the box with printer.*

If print quality has declined the next time you print, adjust the print quality. See the related information below for details.

Related Information

➡ "Adjusting the Print Quality" on page 111

Solving Problems

Cannot Print, Copy, Scan, or Fax. 151

Printing, Copying, Scanning, and Faxing Quality is Poor. 169

Cannot Select Paper Type or Paper Source in Printer Driver. 191

An Error Code is Displayed on the LCD Screen. 191

Paper Gets Jammed. 193

It is Time to Refill the Ink. 199

It is Time to Replace the Maintenance Box. 205

Cannot Operate the Printer as Expected. 210

If you cannot clear a paper jam or paper out error. 215

Cannot Solve Problem. 219

Cannot Print, Copy, Scan, or Fax

Problem Solving

Read this section if you cannot print, scan, or fax as expected or if there are problems when printing. See the following for solutions to some common problems.

Is the printer on?

Solutions

- ❑ Make sure the printer is turned on.
- ❑ Make sure the power cord is correctly connected.

➡ "Power Does Not Turn On" on page 210
➡ "Cannot Solve Problem" on page 219

Is any paper jammed in the printer?

Solutions

If paper is jammed in the printer, it cannot start printing. Remove the jammed paper from the printer.

➡ "Paper Gets Jammed" on page 193

Is the printer itself working properly?

Solutions

- ❑ If an error message is displayed on the LCD screen, check the error.
- ❑ Print a status sheet and use it to check if the printer itself can print properly.

➡ "An Error Code is Displayed on the LCD Screen" on page 191
➡ "Print Status Sheet" on page 246

Are you having connection problems?

Solutions

- ❑ Make sure the cables are properly connected for all connections.
- ❑ Make sure that any network device (router, hub) or USB hub that you use is operating normally.
- ❑ If you have a Wi-Fi connection, make sure that the Wi-Fi connection settings are correct.
- ❑ If you have a network connection, check the network that your computer and printer are connected to, and make sure that the names of the networks match.

➡ "The Printer Cannot Connect to the Network" on page 156
➡ "The Printer Cannot Connect by USB" on page 155
➡ "Checking the Printer's Network Connection Status (Network Connection Report)" on page 132

Has print data been sent correctly?

Solutions

- ❑ Make sure there is no print data standing by from a previous job.
- ❑ Check the printer driver to make sure the printer is not offline.

➡ "There is still a job waiting to be printed." on page 153
➡ "The printer is paused or offline." on page 153

The Application or Printer Driver do not Work Properly

Cannot Print Even Though a Connection has been Established (Windows)

One of the following situations may be the cause.

A genuine Epson printer driver has not been installed.

Solutions

If a genuine Epson printer driver (EPSON XXXXX) has not been installed, the available functions are limited. We recommend using a genuine Epson printer driver.

➡ "Checking if a genuine Epson printer driver is installed - Windows" on page 125
➡ "Checking if a genuine Epson printer driver is installed - Mac OS" on page 127

There is a problem with the software or data.

Solutions

- ❑ Make sure a genuine Epson printer driver (EPSON XXXXX) is installed. If a genuine Epson printer driver is not installed, the available functions are limited. We recommend using a genuine Epson printer driver.
- ❑ If you are printing a large image, the computer may run out of memory. Print the image at a lower resolution or a smaller size.
- ❑ You may be able to clear the problem by updating the software to the latest version. To check the software status, use the software update tool.
- ❑ If you have tried all of the solutions and have not solved the problem, try uninstalling and then reinstalling the printer driver.

➡ "Checking if a genuine Epson printer driver is installed - Windows" on page 125
➡ "Checking if a genuine Epson printer driver is installed - Mac OS" on page 127
➡ "Installing the Applications Separately" on page 124
➡ "Application for Updating Software and Firmware (Epson Software Updater)" on page 233

There is a problem with the printer's status.

Solutions

Click **EPSON Status Monitor 3** on the printer driver's **Maintenance** tab, and then check the printer status. If **EPSON Status Monitor 3** is disabled, click **Extended Settings** on the **Maintenance** tab, and then select **Enable EPSON Status Monitor 3**.

There is still a job waiting to be printed.

Solutions

Click **Print Queue** on the printer driver's **Maintenance** tab. If unnecessary data remains, select **Cancel all documents** from the **Printer** menu.

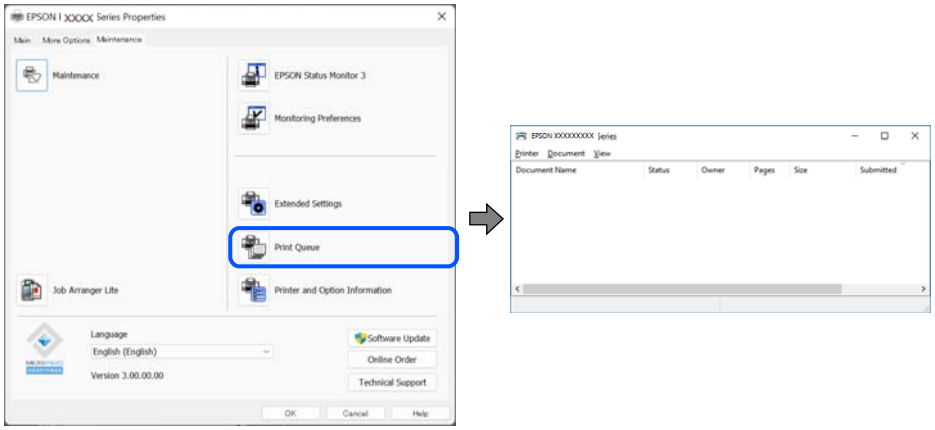

The printer is paused or offline.

Solutions

Click **Print Queue** on the printer driver's **Maintenance** tab.

If the printer is paused or offline, clear the related setting from the **Printer** menu.

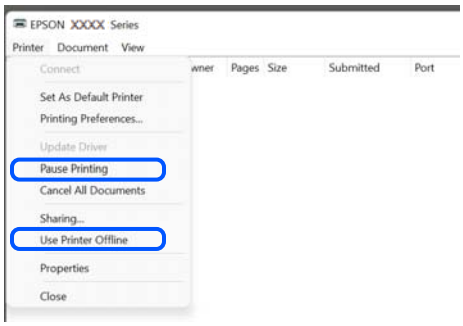

The printer is not selected as the default printer.

Solutions

Right-click the printer icon in **Control Panel** > **View devices and printers** (or **Printers**, or **Printers and Faxes**) and click **Set as default printer**.

Note:
If there are multiple printer icons, select the correct one based on the connection type, as described below.

USB connection: EPSON XXXX Series

Network connection: EPSON XXXX Series (network)

If you install the printer driver multiple times, copies of the printer driver may be created. If copies such as "EPSON XXXX Series (copy 1)" are created, right-click the copied driver icon, and then click **Remove Device**.

The printer port is not set correctly.

Solutions

Click **Print Queue** on the printer driver's **Maintenance** tab.

Make sure the printer port is set correctly as shown below in **Properties** > **Ports** from the **Printer** menu.

USB connection: **USBXXX**, Network connection: **EpsonNet Print Port**

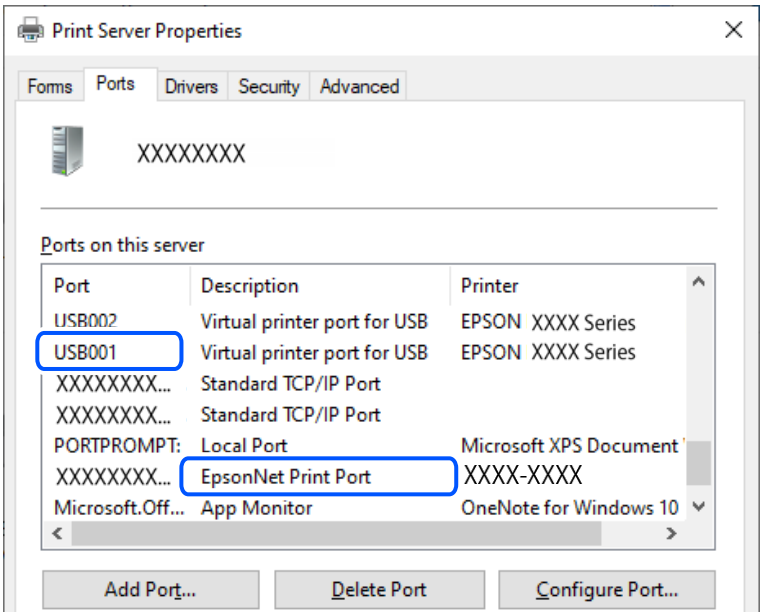

Cannot Print Even Though a Connection has been Established (Mac OS)

One of the following situations may be the cause.

A genuine Epson printer driver has not been installed.

Solutions

If a genuine Epson printer driver (EPSON XXXXX) has not been installed, the available functions are limited. We recommend using a genuine Epson printer driver.

➡ "Checking if a genuine Epson printer driver is installed - Windows" on page 125
➡ "Checking if a genuine Epson printer driver is installed - Mac OS" on page 127

There is a problem with the software or data.

Solutions

- ❑ Make sure a genuine Epson printer driver (EPSON XXXXX) is installed. If a genuine Epson printer driver is not installed, the available functions are limited. We recommend using a genuine Epson printer driver.
- ❑ If you are printing a large image, the computer may run out of memory. Print the image at a lower resolution or a smaller size.
- ❑ You may be able to clear the problem by updating the software to the latest version. To check the software status, use the software update tool.

❏ If you have tried all of the solutions and have not solved the problem, try uninstalling and then reinstalling the printer driver.

➡ "Checking if a genuine Epson printer driver is installed - Windows" on page 125
➡ "Checking if a genuine Epson printer driver is installed - Mac OS" on page 127
➡ "Installing the Applications Separately" on page 124
➡ "Application for Updating Software and Firmware (Epson Software Updater)" on page 233

There is a problem with the printer's status.

Solutions

Make sure the printer status is not set to **Pause**.

Select **System Preferences** (or **System Settings**) from the **Apple** menu > **Printers & Scanners** (or **Print & Scan** or **Print & Fax**), and then double-click the printer. If the printer is paused, click **Resume**.

Cannot Print Even Though a Connection has been Established (iOS)

One of the following situations may be the cause.

Paper Setup Auto Display is disabled.

Solutions

Enable **Paper Setup Auto Display** in the following menu on the LCD screen.

Paper Source Settings > **Paper Setup Auto Display**

AirPrint is disabled.

Solutions

Enable the AirPrint setting in Web Config.

➡ "Application for Configuring Printer Operations (Web Config)" on page 232

Cannot Scan Even Though a Connection has been Correctly Established

Scanning at a high resolution over a network.

Solutions

Try scanning at a lower resolution.

The Printer Cannot Connect by USB

One of the following situations may be the cause.

The USB cable is not plugged into the USB inlet correctly.

Solutions

Connect the USB cable securely to the printer and the computer.

There is a problem with the USB hub.

Solutions

If you are using a USB hub, try to connect the printer directly to the computer.

There is a problem with the USB cable or the USB inlet.

Solutions

Connect the USB cable to a different port, or change the USB cable.

The printer is connected to a SuperSpeed USB port.

Solutions

If you connect the printer to a SuperSpeed USB port using a USB 2.0 cable, a communication error may occur on some computers. In this case, reconnect the printer using one of the following methods:

- ❏ Use a USB 3.0 cable (supported models only).
- ❏ Connect to a Hi-Speed USB port on the computer.
- ❏ Connect to a SuperSpeed USB port other than the port that generated the communication error.

➡ "Interface Specifications" on page 250

The Printer Cannot Connect to the Network

Main causes and solutions for network connection problems

Check the following to see if there is a problem with the operation or settings for the connected device.

Check the cause of the printer network connection failure.

Solutions

Print out the network connection check report to see the issue and check the recommended solutions.

See the following related information for details on reading the network connection check report.

Note:
If you want to check more information on the network settings, print a network status sheet.

➡ "Checking the Printer's Network Connection Status (Network Connection Report)" on page 132
➡ "Messages and Solutions on the Network Connection Report" on page 133

Use the Epson Printer Connection Checker to improve the connection to the computer. (Windows)

Solutions

You may be able to solve the problem depending on the results of the check.

1. Double-click the **Epson Printer Connection Checker** icon on the desktop.

   Epson Printer Connection Checker starts.

   If there is no icon on the desktop, follow the methods below to start Epson Printer Connection Checker.

❏ Windows 11

Click the start button, and then select **All apps** > **Epson Software** > **Epson Printer Connection Checker**.

❏ Windows 10

Click the start button, and then select **Epson Software** > **Epson Printer Connection Checker**.

❏ Windows 8.1/Windows 8

Enter the application name in the search charm, and then select the displayed icon.

❏ Windows 7

Click the start button, and then select **All Programs** > **Epson Software** > **Epson Printer Connection Checker**.

2. Follow the on-screen instructions.

Note:
If the printer name is not displayed, install a genuine Epson printer driver.

"Checking if a genuine Epson printer driver is installed - Windows" on page 125

When you have identified the problem, follow the solution displayed on the screen.

If you cannot solve the problem, see the information at the links below based on your situation.

❏ The printer is not recognized over a network connection

"Checking the Printer's Network Connection Status (Network Connection Report)" on page 132

❏ The printer is recognized, but printing cannot be performed.

"Cannot Print Even Though a Connection has been Established (Windows)" on page 152

Something is wrong with the network devices for Wi-Fi connection.

Solutions

Try the following if you can reset the wireless LAN router in your environment:

Turn off the devices you want to connect to the network. Wait for about 10 seconds, and then turn on the devices in the following order: wireless router, computer or mobile devices, and then printer. Move the printer and computer or mobile devices closer to the wireless router to help with radio wave communication, and then try to configure network settings again.

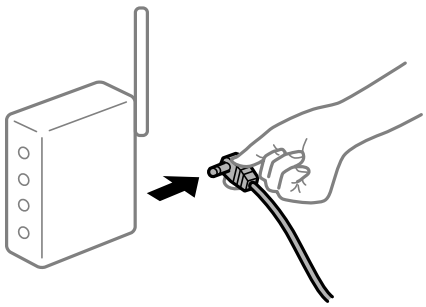

Devices cannot receive signals from the wireless router because they are too far apart.

Solutions

After moving the computer or the mobile devices and the printer closer to the wireless router, turn off the wireless router, and then turn it back on.

When changing the wireless router, the settings do not match the new router.

Solutions

Reconfigure the settings so that they match the new wireless router.

➡ "Resetting the Network Connection" on page 127

The SSIDs connected from the computer or mobile devices and computer are different.

Solutions

When you are using multiple wireless routers at the same time or the wireless router has multiple SSIDs and devices are connected to different SSIDs, you cannot connect to the wireless router.

❏ Example of connecting to different SSIDs

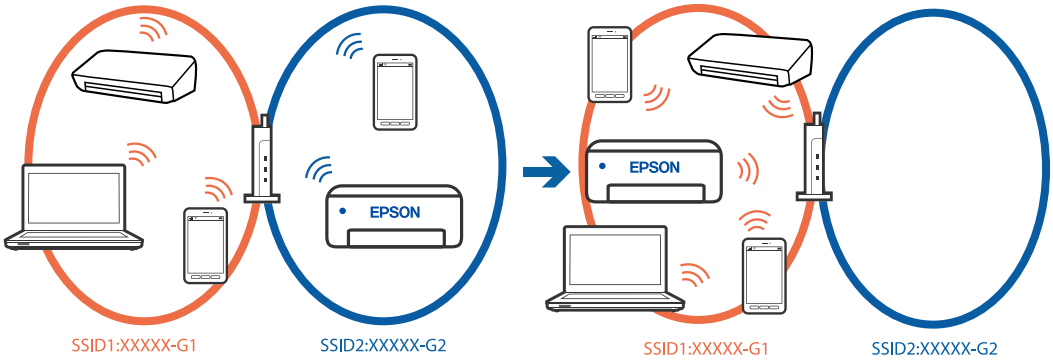

❏ Example of connecting to SSIDs with a different frequency range

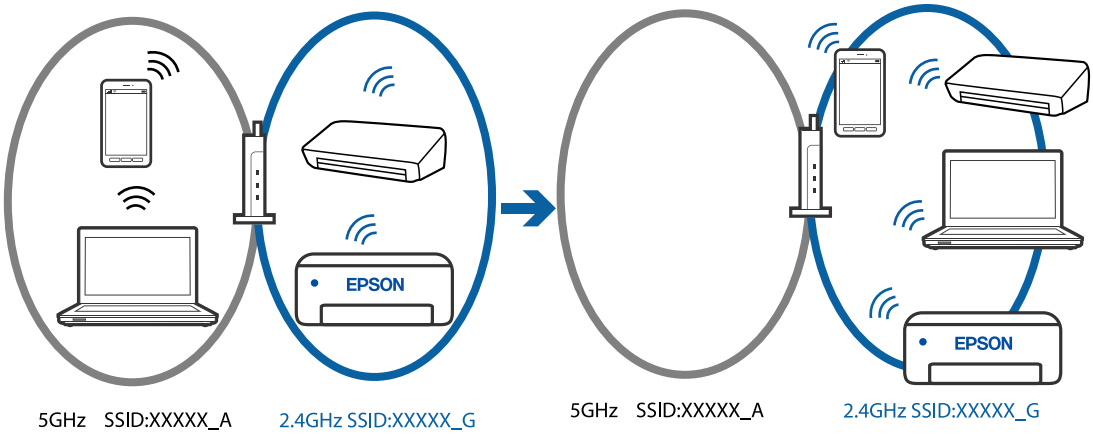

Connect the computer or mobile devices to the same SSID as the printer.

❏ Check the SSID that the printer is connected to by printing out the network connection check report.

❏ On all of the computers and mobile devices you want to connect to the printer, check the name of the Wi-Fi or network you are connected to.

❏ If the printer and your computer or mobile devices are connected to different networks, reconnect the devices to the SSID that the printer is connected to.

A privacy separator on the wireless router is enabled.

Solutions

Most wireless routers have a separator function that blocks communication between devices within the same SSID. If you cannot communicate between the printer and the computer or mobile devices even if they are connected to the same network, disable the separator function on the wireless router. See the manual provided with the wireless router for details.

The IP address is incorrectly assigned.

Solutions

If the IP address assigned to the printer is 169.254.XXX.XXX, and the subnet mask is 255.255.0.0, the IP address may not be assigned correctly.

Print the network connection report, and then check the IP address and the subnet mask assigned to the printer. To print a network connection report, select **More** > **Settings** > **Network Settings** > **Connection Check**.

Restart the wireless router or reset the network settings for the printer.

➡ "Setting a Static IP Address for the Printer" on page 144

A device connected to the USB 3.0 port causes radio frequency interference.

Solutions

When you connect a device to the USB 3.0 port on a Mac, radio frequency interference may occur. Try the following if you cannot connect to wireless LAN (Wi-Fi) or if operations become unstable.

❏ Place the device that is connected to the USB 3.0 port further away from the computer.

There is a problem with the network settings on the computer or mobile devices.

Solutions

Try accessing any website from your computer or mobile devices to make sure that your device's network settings are correct. If you cannot access any websites, there is a problem on the computer or mobile devices.

Check the network connection for the computer or mobile devices. See the documentation provided with the computer or mobile devices for details.

The printer has been connected via Ethernet using devices that support IEEE802.3az (Energy Efficient Ethernet).

Solutions

When you connect the printer via Ethernet using devices that support IEEE802.3az (Energy Efficient Ethernet), the following problems may occur depending on the hub or router that you are using.

This setting is only available on models with wired LAN functionality.

❏ The printer connection is unstable, and continuously connects and disconnects.

❏ You cannot connect to the printer.

❏ The communication speed is slow.

Follow the steps below to disable IEEE802.3az for the printer and then reconnect.

1. Remove the Ethernet cables connected to the computer and the printer.

2. If IEEE802.3az is enabled on the computer, disable it.

   See the documentation provided with the computer for details.

3. Connect the computer and the printer directly with an Ethernet cable.

4. On the printer, print a network connection report.

   "Checking the Printer's Network Connection Status (Network Connection Report)" on page 132

5. Check the printer's IP address on the network connection report.

6. On the computer, access Web Config.

   Launch a Web browser, and then enter the printer's IP address.

   "Application for Configuring Printer Operations (Web Config)" on page 232

7. Log on as an administrator from **Advanced Settings**.

   Note:
   The administrator password is set in advance for the advanced settings in Web Config. See the link below for details on the administrator password.

8. Select **Network** tab > **Wired LAN**.

9. Select **OFF** for **IEEE 802.3az**.

10. Click **Next**.

11. Click **OK**.

12. Remove the Ethernet cable connected to the computer and the printer.

13. If you disabled IEEE802.3az for the computer in step 2, enable it.

14. Connect the Ethernet cables that you removed in step 1 to the computer and the printer.

If the problem still occurs, devices other than the printer may be causing the problem.

➡ "Application for Configuring Printer Operations (Web Config)" on page 232
➡ "Default Value of the Administrator Password" on page 16

Cannot Send or Receive Faxes

Cannot Send or Receive Faxes

One of the following situations may be the cause.

There are some problems in the telephone wall jack.

Solutions

Check that the telephone wall jack works by connecting a phone to it and testing it. If you cannot make or receive calls, contact your telecommunication company.

There are some problems connecting to the telephone line.

Solutions

Select **More** > **Settings** > **Fax Settings** > **Check Fax Connection** on the printer's control panel to run the automatic fax connection check. Try the solutions printed on the report.

Communication error occurs.

Solutions

Select **Slow(9,600bps)** in **More** > **Settings** > **Fax Settings** > **Basic Settings** > **Fax Speed** on the printer's control panel.

Connected to a DSL phone line without DSL filter.

Solutions

To connect to a DSL phone line, you need to use a DSL modem equipped with a built-in DSL filter, or install a separate DSL filter to the line. Contact your DSL provider.

"Connecting to DSL or ISDN" on page 80

There are some problems in the DSL filter when you connect to a DSL phone line.

Solutions

If you can not send or receive fax, connect the printer directly to a telephone wall jack to see if the printer can send a fax. If it works, the problem may be caused by the DSL filter. Contact your DSL provider.

Cannot Send Faxes

One of the following situations may be the cause.

Communication error occurs.

Solutions

Select **Slow(9,600bps)** in **More** > **Settings** > **Fax Settings** > **Basic Settings** > **Fax Speed** on the printer's control panel.

Sending faxes without entering an access code in an environment in which a PBX is installed.

Solutions

If your phone system requires an external access code to get an outside line, register the access code to the printer, and enter # (hash) at the beginning of a fax number when sending.

➡ "Selecting Settings for a PBX Phone System" on page 84

The recipient's fax number is wrong.

Solutions

Check that the recipient's number registered in your contacts list or that you entered directly using the keypad is correct. Or, check with the recipient that the fax number is correct.

The recipient's fax machine is not ready to receive faxes.

Solutions

Ask the recipient if the recipient's fax machine is ready to receive a fax.

The data being sent is too large.

Solutions

You can send faxes at a smaller data size using one of the following methods.

- When you send the fax in monochrome, enable **Direct Send** in **Fax** > **Fax Settings** > **Fax Send Settings**.

  "Sending Many Pages of a Monochrome Document (Direct Send)" on page 95

- Use a connected phone

  "Sending Faxes Dialing from the External Phone Device" on page 94

- Send sections of the originals as separate faxes

The header information for outgoing faxes is not registered.

Solutions

Select **More** > **Settings** > **Fax Settings** > **Basic Settings** > **Header** and set up the header information. Some fax machines automatically reject incoming faxes that do not include header information.

Your caller ID is blocked.

Solutions

Contact your telecommunications company to unblock your caller ID. Some phones or fax machines automatically reject anonymous calls.

Cannot Receive Faxes

One of the following situations may be the cause.

The Receive Mode is set to Manual while an external phone device is connected to the printer.

Solutions

If an external phone device is connected to the printer and is sharing a phone line with the printer, select **More** > **Settings** > **Fax Settings** > **Basic Settings**, and then set **Receive Mode** to **Auto**.

The computer that will save the received faxes is not turned on.

Solutions

When you have selected settings to save received faxes to a computer, turn on the computer. The received fax is deleted once it has been saved to the computer.

The sender's fax number has not been registered in the contacts list.

Solutions

Register the sender's fax number to contact list. Or disable **Caller not in Contacts** in **More** > **Settings** > **Fax Settings** > **Basic Settings** > **Rejection Fax** > **Rejection Fax**. Faxes sent from numbers that have not been registered to this list are blocked.

The sender's fax number has been registered to the Rejection Number List.

Solutions

Make sure that the sender's number can be deleted from the **Rejection Number List** before deleting it. Delete it from **More** > **Settings** > **Fax Settings** > **Basic Settings** > **Rejection Fax** > **Edit Blocked Number list**. Or disable the **Rejection Number List** in **More** > **Settings** > **Fax Settings** > **Basic Settings** > **Rejection Fax** > **Rejection Fax**. Faxes sent from numbers that have not been registered to this list are blocked when this setting is enabled.

Subscribing to a call forwarding service.

Solutions

If you have subscribed to a call forwarding service, the printer may not be able to receive faxes. Contact the service provider.

Cannot Send Faxes to a Specific Recipient

One of the following situations may be the cause.

The recipient's machine takes a long time to answer.

Solutions

If the recipient machine does not pick up your call within 50 seconds after the printer has finished dialing, the call ends with an error. Dial using a connected telephone to check how long it takes before you hear a fax tone. If it takes more than 50 seconds, add pauses after the fax number to send the fax. The – is used to enter pauses. A hyphen is entered as the pause mark. One pause is about three seconds. Add multiple pauses as needed.

The Fax Speed setting registered in the contact list is wrong.

Solutions

Select **More** > **Settings** > **Contacts Manager** > **Edit**, and then select the recipient from the contact list. Follow the on-screen instructions, and then set **Fax Speed** to **Slow(9,600bps)**.

The header information for outgoing faxes is not registered.

Solutions

Select **More** > **Settings** > **Fax Settings** > **Basic Settings** > **Header** and set up the header information. Some fax machines automatically reject incoming faxes that do not include header information.

Cannot Send Faxes at a Specified Time

The printer's date and time is wrong.

Solutions

Select **More** > **Settings** > **Printer Setup** > **Date/Time Settings**, and then set the correct date and time.

Faxes Are Sent at the Wrong Size

One of the following situations may be the cause.

The originals are not placed correctly.

Solutions

❏ Make sure the original is placed correctly against the alignment marks.

If the edge of the scanned image is missing, move the original slightly away from the edge of the scanner glass.

➡ "Placing Originals" on page 36

There is dust or dirt on the originals or the scanner glass.

Solutions

Remove any dust or dirt from the originals, and clean the scanner glass.

➡ "Cleaning the Scanner Glass" on page 117

Received Faxes Are Not Printed

One of the following situations may be the cause.

An error has occurred in the printer such as a paper jam.

Solutions

Clear the printer error, and then ask the sender to resend the fax.

Printing received faxes is disabled under the current settings.

Solutions

If **Save to Computer** is set to **Yes**, change the setting to **Yes and Print**, or disable **Save to Computer**.

You can find **Save to Computer** in **More** > **Settings** > **Fax Settings** > **Receive Settings**.

Cannot Send or Receive Faxes in Windows Even Though a Connection has been Successfully Established

One of the following situations may be the cause.

The software is not installed.

Solutions

Make sure that the PC-FAX driver is installed on the computer. The PC-FAX driver is installed with FAX Utility. Follow the steps below to check if it is installed.

Make sure the printer (fax) is displayed in **Devices and Printers**, **Printer**, or **Printers and Other Hardware**. The printer (fax) is displayed as "EPSON XXXXX (FAX)". If the printer (fax) is not displayed, uninstall and then reinstall the FAX Utility. See the following to access **Devices and Printers**, **Printer**, or **Printers and Other Hardware**.

❏ Windows 11

Click on the start button, and then select **Settings** > **Bluetooth & devices** > **Printers & scanners**.

❏ Windows 10

Click on the start button, and then select **Windows System** > **Control Panel** > **View devices and printers** in **Hardware and Sound**.

❏ Windows 8.1/Windows 8

Select **Desktop** > **Settings** > **Control Panel** > **View devices and printers** in **Hardware and Sound** or **Hardware**.

❏ Windows 7

Click the start button, and select **Control Panel** > **View devices and printers** in **Hardware and Sound** or **Hardware**.

There are some problems with fax connection and fax settings.

Solutions

Try the resolutions for fax connection and fax settings.

➡ "Connecting the Printer to a Phone Line" on page 79

Cannot Send or Receive Faxes in Mac OS Even Though a Connection has been Correctly Established

One of the following situations may be the cause.

The software is not installed.

Solutions

Make sure that the PC-FAX driver is installed on the computer. The PC-FAX driver is installed with FAX Utility. Follow the steps below to check if it is installed.

Select **System Preferences** (or **System Settings**) from the Apple menu > **Printers & Scanners** (or **Print & Scan** or **Print & Fax**), and then make sure the printer (fax) is displayed. The printer (fax) is displayed as "FAX XXXX (USB)" or "FAX XXXX (IP)". If the printer (fax) is not displayed, click [+] and then register the printer (fax).

PC-FAX driver is paused.

Solutions

Select **System Preferences** (or **System Settings**) from the Apple menu > **Printers & Scanners** (or **Print & Scan** or **Print & Fax**), and then double-click the printer (fax). If the printer is paused, click **Resume** (or **Resume Printer**).

There are some problems with fax connection and fax settings.

Solutions

Try the resolutions for fax connection and fax settings.

➡ "Connecting the Printer to a Phone Line" on page 79

Paper Does Not Feed Properly

Points to Check

One of the following situations may be the cause.

The installation location is inappropriate.

Solutions

Place the printer on a flat surface and operate in the recommended environmental conditions.

➡ "Environmental Specifications" on page 255

Unsupported paper is being used.

Solutions

Use paper supported by this printer.

➡ "Available Paper and Capacities" on page 222
➡ "Unavailable Paper Types" on page 227

Paper handling is inappropriate.

Solutions

Follow paper handling precautions.

➡ "Paper Handling Precautions" on page 29

Too many sheets are loaded in the printer.

Solutions

Do not load more than the maximum number of sheets specified for the paper. For plain paper, do not load above the line indicated by the triangle symbol on the edge guide.

➡ "Available Paper and Capacities" on page 222

The paper settings on the printer are incorrect.

Solutions

Make sure the paper size and paper type settings match the actual paper size and paper type loaded in the printer.

➡ "Paper Size and Type Settings" on page 30

The paper settings in the printer driver are incorrect.

Solutions

Make sure the paper size and paper type settings in the printer driver match the actual paper size and paper type loaded in the printer.

Paper Feeds at a Slant

One of the following situations may be the cause.

The paper is curled.

Solutions

If the paper is curled or the edges of the paper are folded, it may touch the print head and be fed at an angle.

Place the paper on a flat surface to check if it is curled. If it is, flatten it.

The paper is loaded incorrectly.

Solutions

Load paper in the correct direction, and slide the edge guides against the edges of the paper.

➡ "Loading Paper in the Rear Paper Feeder" on page 32

Several Sheets of Paper are Fed at a Time

One of the following situations may be the cause.

The paper is moist or damp.

Solutions

Load new paper.

Static electricity is causing sheets of paper to stick to each other.

Solutions

Fan the paper before loading. If the paper still does not feed, load one sheet of paper at a time.

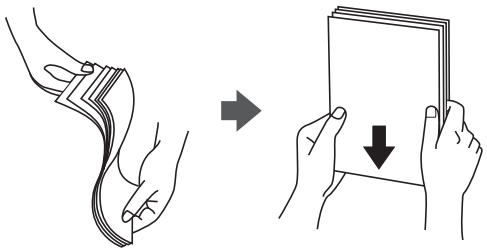

Multiple sheets of paper are loaded.

Solutions

Load one sheet of paper at a time if you have loaded several sheets of paper.

Multiple sheets of paper feed at the same time during manual 2-sided printing.

Solutions

Remove any paper that is loaded in the paper source before you reload the paper.

Paper Out Error Occurs

Paper is not loaded in the center of the rear paper feeder.

Solutions

When a paper out error occurs although paper is loaded in the rear paper feeder, reload paper in the center of the rear paper feeder.

Original Does Not Feed into the ADF

One of the following situations may be the cause.

The originals are loaded incorrectly.

Solutions

Load originals in the correct direction, and slide the ADF edge guide against the edge of the originals.

➡ "Placing Originals on the ADF" on page 37

Unsupported originals are being used.

Solutions

Use originals supported by the ADF.

➡ "ADF Specifications" on page 249

Too many originals are loaded in the ADF.

Solutions

Do not load originals above the line indicated by the triangle symbol on the ADF.

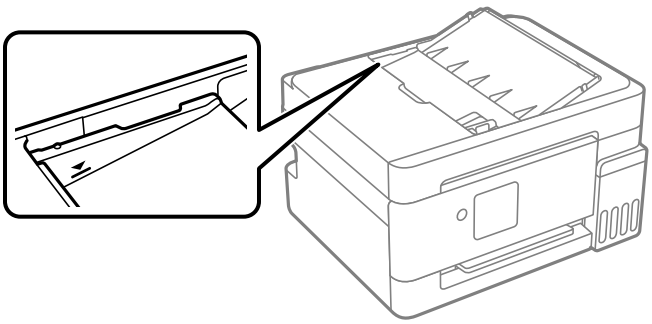

A paper feeding problem occurred in the ADF.

Solutions

Reduce the amount of paper being loaded.

The original slips when paper dust adheres to the roller.

Solutions

Clean the inside of the ADF.

➡ "Cleaning the ADF" on page 117

Originals are not detected.

Solutions

On the screen for copy, scan, or fax, check that the ADF icon is on. If it is off, place the originals again.

Printing, Copying, Scanning, and Faxing Quality is Poor

Print Quality is Poor

Color Missing, Banding, or Unexpected Colors Appear in Printout

The print head nozzles may be clogged.

Solutions

Use the **Print Quality Adjustment** feature. If you have not used the printer for a long time, the print head nozzles may be clogged and ink drops may not be discharged.

➡ "Adjusting the Print Quality" on page 111

Print Quality is Poor with Black Ink

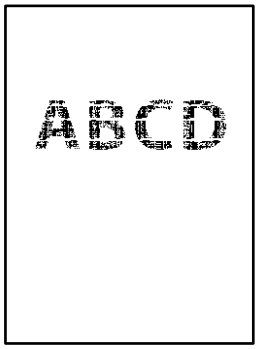

The print head nozzles may be clogged.

Solutions

❏ Use the **Print Quality Adjustment** feature. If you have not used the printer for a long time, the print head nozzles may be clogged and ink drops may not be discharged.

"Adjusting the Print Quality" on page 111

❏ If you cannot solve the problem using head cleaning, you can print immediately with a mixture of color inks to create composite black by changing the following settings in Windows.

Click **Extended Settings** on the printer driver's **Maintenance** tab. If you select **Use a Mixture of Color Inks to Create Black**, you can print at **Standard** print quality when the **Paper Type** is **Plain paper** or **Envelope**.

Note that this feature cannot solve nozzle clogging. To solve nozzle clogging, contact Epson support.

➡ "Contacting Epson Support" on page 262

Colored Banding Appears at Intervals of Approximately 2.5 cm (1.0 in.)

One of the following situations may be the cause.

The paper type in the printer settings is incorrect.

Solutions

Make sure the paper type in the printer settings matches the actual paper type.

➡ "List of Paper Types" on page 30

The print quality setting is too low.

Solutions

When printing on plain paper,use a higher quality setting.

❏ Windows

Select **High** from **Quality** on the printer driver's **Main** tab.

❏ Mac OS

Select **Fine** as **Print Quality** from the print dialog's **Print Settings** menu.

The print head is out of alignment.

Solutions

Align the print head using the **Print Quality Adjustment** feature.

➡ "Adjusting the Print Quality" on page 111

Blurry Prints, Vertical Banding, or Misalignment

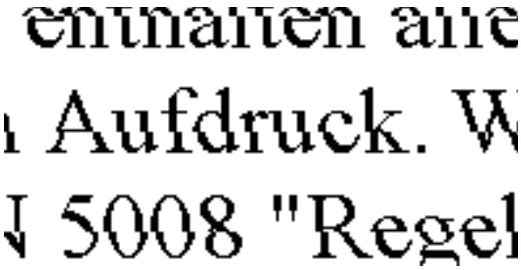

One of the following situations may be the cause. Try the solutions in the order shown.

The print head is out of alignment.

Solutions

Align the print head using the **Print Quality Adjustment** feature.

➡ "Adjusting the Print Quality" on page 111

The bidirectional printing setting is enabled.

Solutions

If print quality does not improve even after aligning the print head, disable the bidirectional setting.

During bidirectional (or high speed) printing, the print head prints while moving in both directions, and vertical lines may be misaligned. Disabling this setting may slow down printing speed but improve print quality.

❏ Windows

Clear **Bidirectional Printing** on the printer driver's **More Options** tab.

❏ Mac OS

Select **System Preferences** (or **System Settings**) from the Apple menu > **Printers & Scanners** (or **Print & Scan** or **Print & Fax**), and then select the printer. Click **Options & Supplies** > **Options** (or **Driver**). Select **Off** as the **Bidirectional Printing** setting.

The Printout Comes Out as a Blank Sheet

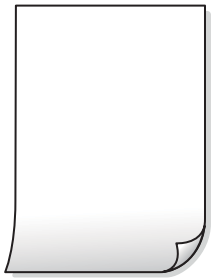

The print head nozzles may be clogged.

Solutions

Use the **Print Quality Adjustment** feature. If you have not used the printer for a long time, the print head nozzles may be clogged and ink drops may not be discharged.

➡ "Adjusting the Print Quality" on page 111

The paper size in the print settings is incorrect.

Solutions

Make sure the paper size in the print settings matches the actual paper size.

Multiple sheets of paper are fed into the printer at the same time.

Solutions

See the following to prevent multiple sheets of paper from being fed into the printer at the same time.

➡ "Several Sheets of Paper are Fed at a Time" on page 167

Printed at an Angle

The paper is curled.

Solutions

If the paper is curled or the edges of the paper are folded, it may touch the print head and be fed at an angle.

Place the paper on a flat surface to check if it is curled. If it is, flatten it.

The paper is loaded incorrectly.

Solutions

Load paper in the correct direction, and slide the edge guides against the edges of the paper.

➡ "Loading Paper in the Rear Paper Feeder" on page 32

Paper Is Smeared or Scuffed

One of the following situations may be the cause.

The paper is loaded incorrectly.

Solutions

When horizontal banding (perpendicular to the printing direction) appears, or the top or bottom of the paper is smeared, load paper in the correct direction and slide the edge guides to the edges of the paper.

➡ "Loading Paper in the Rear Paper Feeder" on page 32

The paper path is smeared.

Solutions

When vertical banding (parallel to the printing direction) appears, or the paper is smeared, clean the paper path.

➡ "Cleaning the Paper Path for Ink Smears" on page 116

The paper is curled.

Solutions

Place the paper on a flat surface to check if it is curled. If it is, flatten it.

The print head is rubbing the surface of the paper.

Solutions

When printing on thick paper, the print head is close to the printing surface and the paper may be scuffed. In this case, enable the reduce scuff setting. If you enable this setting, print quality may decline or printing may slow down.

❏ Windows

Click **Extended Settings** on the printer driver's **Maintenance** tab, and then select **Short Grain Paper**.

❏ Mac OS

Select **System Preferences** (or **System Settings**) from the Apple menu > **Printers & Scanners** (or **Print & Scan** or **Print & Fax**), and then select the printer. Click **Options & Supplies** > **Options** (or **Driver**). Select **On** as the **Thick paper and envelopes** setting.

The back of the paper was printed before the side that had already been printed was dry.

Solutions

When performing manual 2-sided printing, make sure that the ink is completely dry before reloading the paper.

Printed Photos are Sticky

The wrong side of the photo paper was used.

Solutions

Make sure the paper size in the printer settings matches the actual paper size. If you print on the wrong side of the photo paper, you need to clean the paper path.

➡ "Cleaning the Paper Path for Ink Smears" on page 116

Images or Photos Contain Unexpected Colors

One of the following situations may be the cause.

The print head nozzles may be clogged.

Solutions

Use the **Print Quality Adjustment** feature. If you have not used the printer for a long time, the print head nozzles may be clogged and ink drops may not be discharged.

➡ "Adjusting the Print Quality" on page 111

Color correction has been applied.

Solutions

When printing from the Windows printer driver, the Epson auto photo adjustment setting is applied by default depending on the paper type. Try changing the setting.

On the **More Options** tab, select **Custom** in **Color Correction**, and then click **Advanced**. Change the **Scene Correction** setting from **Automatic** to any other option. If changing the setting does not work, use any color correction method other than **PhotoEnhance** in **Color Management**.

Colors in the Printout Differ from Those on the Display

The color properties for the display device you are using have not been adjusted correctly.

Solutions

Display devices such as computer screens have their own display properties. If the display is unbalanced, the image is not displayed with proper brightness and colors. Adjust the properties of the display device, then perform the following.

❏ Windows

Access the printer driver window, select **Custom** as the **Color Correction** setting on the **More Options** tab, and then click **Advanced**. Select **EPSON Standard** as the **Color Mode** setting.

❏ Mac OS

Access the print dialog. Select **Color Options** from the pop-up menu, and then click the arrow next to **Advanced Settings**. Select **EPSON Standard** as the **Mode** setting.

The display device is reflecting external light.

Solutions

Avoid direct sunlight and view the image in an environment where the appropriate lighting is assured.

The display device has a high resolution.

Solutions

Colors may differ from what you see on mobile devices with high-resolution displays.

The display device and the printer have a different process of producing colors.

Solutions

Colors on a display are not quite identical to those on paper because the display device and the printer have a different process of producing colors. Adjust the color properties so that the colors match more closely.

Cannot Print Without Margins

The borderless feature is not enabled in the print settings.

Solutions

Enable the borderless feature in the print settings. If you select a paper type that does not support borderless printing, you cannot select **Borderless**. Select a paper type that supports borderless printing.

❏ Windows

Select **Borderless** on the printer driver's **Main** tab.

❏ Mac OS

Select a borderless paper size from **Paper Size**.

The Edges of the Image are Cropped During Borderless Printing

Because the image is slightly enlarged, the area beyond the paper size boundaries is cropped.

Solutions

Select a smaller enlargement setting.

❏ Windows

Click **Settings** next to the **Borderless** checkbox on the printer driver's **Main** tab, and then change the setting.

❏ Mac OS

Change the **Expansion** setting from the print dialog's **Print Settings** menu.

Aspect ratios of the image data and paper size are different.

Solutions

If the aspect ratios of the image data and paper size are different, the long side of the image is cropped if it extends beyond the long side of the paper.

The Position, Size, or Margins of the Printout Are Incorrect

One of the following situations may be the cause.

The paper is loaded incorrectly.

Solutions

Load paper in the correct direction, and slide the edge guides against the edges of the paper.

➡ "Loading Paper in the Rear Paper Feeder" on page 32

The paper size in the printer settings is incorrect.

Solutions

Make sure the paper size in the printer settings matches the actual paper size.

The margin setting in the application software is not within the printable area.

Solutions

Adjust the margin setting in the application so that it falls within the printable area.

➡ "Printable Area" on page 248

Printed Characters Are Incorrect or Garbled

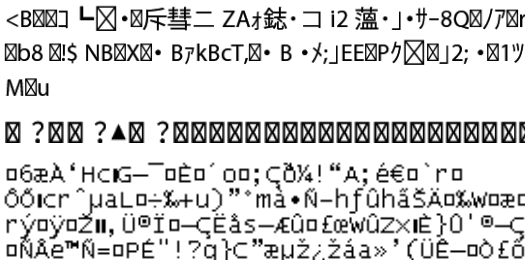

One of the following situations may be the cause.

The USB cable is not connected correctly.

Solutions

Connect the USB cable securely to the printer and the computer.

There is a job waiting to be printed.

Solutions

Cancel any paused print jobs.

➡ "There is still a job waiting to be printed." on page 153

The computer has been manually put into Hibernate or Sleep mode while printing.

Solutions

Do not put the computer manually into **Hibernate** or **Sleep** mode while printing. Pages of garbled text may be printed the next time you start the computer.

You are using the wrong printer driver.

Solutions

Make sure the printer driver you are using is for this printer. Check the printer name on the top of the printer driver window.

The Printed Image Is Inverted

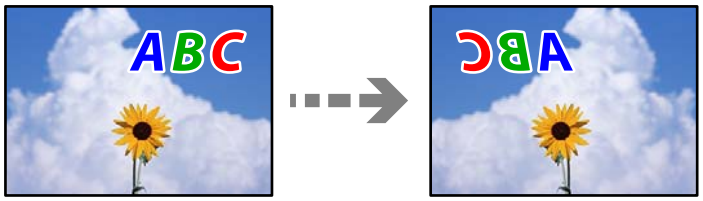

The invert option is enabled in the print settings.

Solutions

Clear any mirror image settings in the printer driver or the application.

❑ Windows

Clear **Mirror Image** on the printer driver's **More Options** tab.

❑ Mac OS

Clear **Mirror Image** from the print dialog's **Print Settings** menu.

Mosaic-Like Patterns Appear in the Printout

Low resolution images or photos were printed.

Solutions

When printing images or photos, print using high-resolution data. Images on web sites are often low resolution even if they look good enough on the display, and so print quality may decline when you print them.

Copy Quality is Poor

Banding or Unexpected Colors Appear, or Colors Are Missing

The print head nozzles may be clogged.

Solutions

Use the **Print Quality Adjustment** feature. If you have not used the printer for a long time, the print head nozzles may be clogged and ink drops may not be discharged.

➡ "Adjusting the Print Quality" on page 111

You copied in draft mode.

Solutions

Change the print quality setting to something other than draft mode, and then copy again.

Note:
For users in Western Europe, draft mode is not available.

Colored Banding Appears at Intervals of Approximately 2.5 cm (1.0 in.)

One of the following situations may be the cause.

The paper type in the printer settings is incorrect.

Solutions

Make sure the paper type in the printer settings matches the actual paper type.

➡ "List of Paper Types" on page 30

The print quality setting is too low.

Solutions

When copying on plain paper, use a higher quality setting.

Select **High** as the **Quality** setting.

➡ "Quality:" on page 67

The print head is out of alignment.

Solutions

Align the print head using the **Print Quality Adjustment** feature.

➡ "Adjusting the Print Quality" on page 111

Blurry Copies, Vertical Banding, or Misalignment

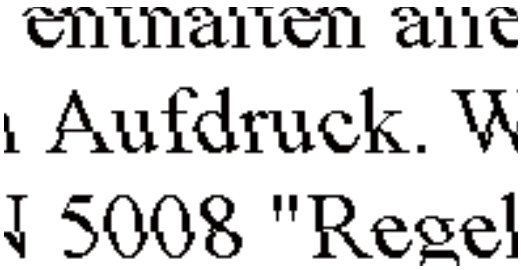

One of the following situations may be the cause.

The print head is out of alignment.

Solutions

Align the print head using the **Print Quality Adjustment** feature.

➡ "Adjusting the Print Quality" on page 111

The Printout Comes Out as a Blank Sheet

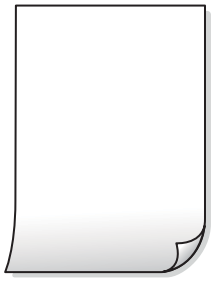

The print head nozzles may be clogged.

Solutions

Use the **Print Quality Adjustment** feature. If you have not used the printer for a long time, the print head nozzles may be clogged and ink drops may not be discharged.

➡ "Adjusting the Print Quality" on page 111

The paper size in the print settings is incorrect.

Solutions

Make sure the paper size in the print settings matches the actual paper size.

Multiple sheets of paper are fed into the printer at the same time.

Solutions

See the following to prevent multiple sheets of paper from being fed into the printer at the same time.

➡ "Several Sheets of Paper are Fed at a Time" on page 167

Paper Is Smeared or Scuffed

One of the following situations may be the cause.

The paper is loaded incorrectly.

Solutions

When horizontal banding (perpendicular to the printing direction) appears, or the top or bottom of the paper is smeared, load paper in the correct direction and slide the edge guides to the edges of the paper.

➡ "Loading Paper in the Rear Paper Feeder" on page 32

The paper path is smeared.

Solutions

When vertical banding (parallel to the printing direction) appears, or the paper is smeared, clean the paper path.

➡ "Cleaning the Paper Path for Ink Smears" on page 116

The paper is curled.

Solutions

Place the paper on a flat surface to check if it is curled. If it is, flatten it.

Cannot Copy Without Margins

Borderless is not set in the print settings.

Solutions

Select **Copy** > **More** > **Borderless Copy**, and then enable the setting . If you select a paper that does not support borderless printing, you cannot enable borderless settings. Select a paper type that supports borderless printing.

The edges of the Image are Cropped During Borderless Copying

Because the image is slightly enlarged, the area beyond the paper size boundaries is cropped.

Solutions

Select a smaller enlargement setting.

Select **Copy** > **More** > **Borderless Copy** > **Expansion** on the control panel, and then change the setting.

The Position, Size, or Margins of the Copies are Incorrect

One of the following situations may be the cause.

The paper is loaded incorrectly.

Solutions

Load paper in the correct direction, and slide the edge guides against the edges of the paper.

➡ "Loading Paper in the Rear Paper Feeder" on page 32

The originals are not placed correctly.

Solutions

- ❑ Make sure the original is placed correctly against the alignment marks.
- ❑ If the edge of the scanned image is missing, move the original slightly away from the edge of the scanner glass.

➡ "Placing Originals" on page 36

There is dust or dirt on the scanner glass.

Solutions

When placing the originals on the scanner glass, remove any dust or dirt from the originals, and clean the scanner glass. If there is dust or stains on the glass, the copy area may extend to include the dust or stains, resulting in the wrong copying position or small images.

➡ "Cleaning the Scanner Glass" on page 117

The paper size in the printer settings is incorrect.

Solutions

Make sure the paper size in the printer settings matches the actual paper size.

Uneven Colors, Smears, Dots, or Straight Lines Appear in the Copied Image

One of the following situations may be the cause.

The paper path is dirty.

Solutions

Clean the paper path.

➡ "Cleaning the Paper Path for Ink Smears" on page 116

There is dust or dirt on the originals or the scanner glass.

Solutions

Remove any dust or dirt from the originals, and clean the scanner glass.

➡ "Cleaning the Scanner Glass" on page 117

There is dust or dirt on the ADF or originals.

Solutions

Clean the ADF, and remove any dust or dirt from the originals.

➡ "Cleaning the ADF" on page 117

The original was pressed with too much force.

Solutions

If you press with too much force, blurring, smudges, and spots may occur.

Do not press with too much force on the original or the document cover.

➡ "Placing Originals" on page 36

The copy density setting is too high.

Solutions

Lower the copy density setting.

➡ "More Menu Options for Copying" on page 66

Moiré (Cross-Hatch) Patterns Appear in the Copied Image

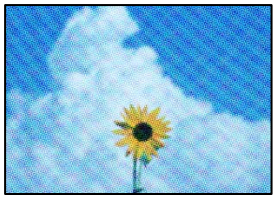

If the original is a printed document such as a magazine or a catalog, a dotted moiré pattern appears.

Solutions

Change the reduce and enlarge setting. If a moiré pattern still appears, place the original at a slightly different angle.

➡ "More Menu Options for Copying" on page 66

An Image of the Reverse Side of the Original Appears in the Copied Image

One of the following situations may be the cause.

When scanning thin originals, images on the back may be scanned at the same time.

Solutions

Place the original on the scanner glass and then place a piece of black paper over it.

➡ "Placing Originals on the Scanner Glass" on page 38

The copy density setting is too high.

Solutions

Lower the copy density setting.

➡ "More Menu Options for Copying" on page 66

The Text or Image Copied from the ADF is Squeezed or Stretched

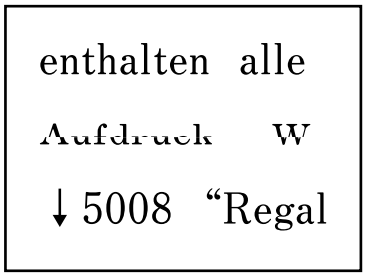

Some originals may not be scanned properly from the ADF.

Solutions

Place originals on the scanner glass.

➡ "Placing Originals on the Scanner Glass" on page 38

Scanned Image Problems

Uneven Colors, Dirt, Spots, Appear when Scanning from the Scanner Glass

There is dust or dirt on the originals or the scanner glass.

Solutions

Remove any dust or dirt from the originals, and clean the scanner glass.

➡ "Cleaning the Scanner Glass" on page 117

The original was pressed with too much force.

Solutions

If you press with too much force, blurring, smudges, and spots may occur.

Do not press with too much force on the original or the document cover.

➡ "Placing Originals" on page 36

Straight Lines Appear when Scanning from ADF

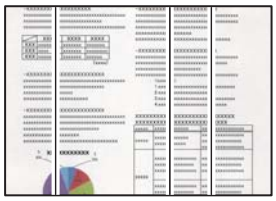

There is dust or dirt on the ADF or originals.

Solutions

Clean the ADF, and remove any dust or dirt from the originals.

➡ "Cleaning the ADF" on page 117

An Image of the Reverse Side of the Original Appears in the Scanned Image

When scanning thin originals, images on the back may be scanned at the same time.

Solutions

Place the original on the scanner glass and then place a piece of black paper over it.

➡ "Placing Originals on the Scanner Glass" on page 38

Cannot Scan the Correct Area on the Scanner Glass

The originals are not placed correctly.

Solutions

- ❑ Make sure the original is placed correctly against the alignment marks.
- ❑ If the edge of the scanned image is missing, move the original slightly away from the edge of the scanner glass.

➡ "Placing Originals" on page 36

There is dust or dirt on the scanner glass.

Solutions

Remove any dust or dirt from the scanner glass and document cover. If there is any dust or dirt around the original, the scanning range expands to include it.

➡ "Cleaning the Scanner Glass" on page 117

When scanning multiple originals using Epson ScanSmart, there is not enough of a gap between the originals.

Solutions

When placing multiple originals on the scanner glass, make sure there is a gap of at least 20 mm (0.8 in.) between the originals.

The Text or Image Scanned from the ADF is Squeezed or Stretched

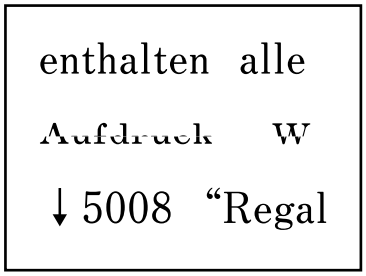

Some originals may not be scanned properly from the ADF.

Solutions

Place originals on the scanner glass.

➡ "Placing Originals on the Scanner Glass" on page 38

Cannot Solve Problems in the Scanned Image

Check the following if you have tried all of the solutions and have not solved the problem.

There are problems with the scanning software settings.

Solutions

Use Epson Scan 2 Utility to initialize the settings for the scanner software.

Note:
Epson Scan 2 Utility is an application supplied with the scanner software.

Note:
*For Windows Server operating systems, make sure the **Desktop Experience** feature is installed.*

1. Start the Epson Scan 2 Utility.
   - ❏ Windows 11
     Click the start button, and then select **All apps** > **EPSON** > **Epson Scan 2 Utility**.
   - ❏ Windows 10/Windows Server 2022/Windows Server 2019/Windows Server 2016
     Click the start button, and then select **EPSON** > **Epson Scan 2 Utility**.
   - ❏ Windows 8.1/Windows 8/Windows Server 2012 R2/Windows Server 2012
     Enter the application name in the search charm, and then select the displayed icon.
   - ❏ Windows 7/Windows Server 2008 R2/Windows Server 2008
     Click the start button, and then select **All Programs** > **EPSON** > **Epson Scan 2** > **Epson Scan 2 Utility**.
   - ❏ Mac OS
     Select **Go** > **Applications** > **Epson Software** > **Epson Scan 2 Utility**.
2. Select the **Other** tab.
3. Click **Reset**.

If initialization does not solve the problem, uninstall and reinstall the scanner software.

➡ "Installing the Applications Separately" on page 124

The Quality of the Sent Fax is Poor

Quality of the Sent Fax is Poor

One of the following situations may be the cause.

There is dust or dirt on the originals or the scanner glass.

Solutions

Remove any dust or dirt from the originals, and clean the scanner glass.

➡ "Cleaning the Scanner Glass" on page 117

The original was pressed with too much force.

Solutions

If you press with too much force, blurring, smudges, and spots may occur.

Do not press with too much force on the original or the document cover.

➡ "Placing Originals" on page 36

Straight Lines Appear when Sending Faxes from the ADF

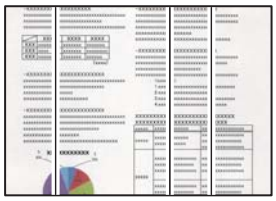

There is dust or dirt on the ADF or originals.

Solutions

Clean the ADF, and remove any dust or dirt from the originals.

➡ "Cleaning the ADF" on page 117

The Image Quality of the Sent Fax is Poor

One of the following situations may be the cause.

The resolution is set to low.

Solutions

If you do not know the performance of the sender's fax machine, set the following before sending a fax.

- ❑ Select **Fax** > **Menu** > **Scan Settings** and then make the **Resolution** setting to set the highest quality image.
- ❑ Select **Fax** > **Menu** > **Fax Send Settings** and then enable **Direct Send**.

  Note that if you set **Resolution** to **Photo** but you send the fax without enabling **Direct Send**, the fax may be sent at a lower resolution.

ECM setting is disabled.

Solutions

Select **More** > **Settings** > **Fax Settings** > **Basic Settings** and enable the **ECM** setting on the printer's control panel. This may clear errors that occur due to connection problems. Note that the speed of sending and receiving faxes may be slower than when **ECM** is disabled.

An Image of the Reverse Side of the Original Appears in the Sent Fax

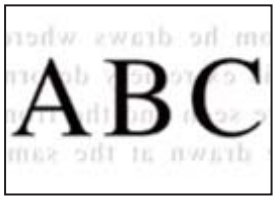

One of the following situations may be the cause.

When scanning thin originals, images on the back may be scanned at the same time.

Solutions

Place the original on the scanner glass and then place a piece of black paper over it.

➡ "Placing Originals on the Scanner Glass" on page 38

The density setting is high when sending faxes.

Solutions

Select **Fax** > **Menu** > **Scan Settings** > **Density**, and then lower the setting.

Received Fax Quality is Poor

The Image Quality of Received Faxes is Poor

Solutions

One of the following situations may be the cause.

ECM setting is disabled.

Solutions

Select **More** > **Settings** > **Fax Settings** > **Basic Settings** and enable the **ECM** setting on the printer's control panel. This may clear errors that occur due to connection problems. Note that the speed of sending and receiving faxes may be slower than when **ECM** is disabled.

The image quality setting is low on the sender's fax machine.

Solutions

Ask the sender to send faxes at a higher quality.

Cannot Select Paper Type or Paper Source in Printer Driver

A genuine Epson printer driver has not been installed.

Solutions

If a genuine Epson printer driver (EPSON XXXXX) has not been installed, the available functions are limited. We recommend using a genuine Epson printer driver.

➡ "Checking if a genuine Epson printer driver is installed - Windows" on page 125
➡ "Checking if a genuine Epson printer driver is installed - Mac OS" on page 127

An Error Code is Displayed on the LCD Screen

A code is displayed on the LCD screen if there is an error or information that requires your attention.

Code	Situation	Solutions
E-01	A printer error has occurred.	Open the document cover and the scanner unit, and then remove any paper or protective material inside the printer. Turn the power off and on again.
E-02	A scanner error has occurred.	Turn the power off and on again.
E-12	The borderless printing ink pad has reached the end of its service life. It is not user-replaceable.	Contact Epson or an authorized Epson service provider to replace the borderless printing ink pad*1*2*3. It is not a user-serviceable part. You cannot perform borderless printing until the part is replaced, but you can continue to print with borders.
E-13	The Ink Pad has reached the end of its service life. Please contact Epson Support.	In order to replace the ink pad, replace the maintenance box. "Replacing a Maintenance Box" on page 205 If the ink pad has reached the end of its service life, you can no longer perform cleaning. You can continue to print, but the quality of the printouts cannot be guaranteed.
W-01	A paper jam has occurred.	Remove the paper from the printer and press the button displayed on the bottom of the LCD screen to clear the error. In some cases, you need to turn the power off and on again. If the paper jam error continues after removing the paper and turning the power off and on again, paper may remain inside the printer. Load Letter or A4 size paper in the rear paper feeder, and then press the ⊡ button to remove the paper inside. Load paper in the portrait direction. "Removing Jammed Paper" on page 193

Code	Situation	Solutions
W-14	The borderless printing ink pad is nearing the end of its service life. It is not user-replaceable.	Contact Epson or an authorised Epson service provider to replace the borderless printing ink pad*1*2*3. It is not a user-serviceable part. The message will be displayed until the ink pad is replaced. Press the ⊡ button to resume printing.
W-15	The Ink Pad is nearing the end of its service life. Please contact Epson Support.	Once the ink pad reaches the end of its service life, replace it by replacing the maintenance box. "Replacing a Maintenance Box" on page 205 Check the message displayed on the computer, and then press the button displayed on the bottom of the LCD screen to clear the error. If the ink pad has reached the end of its service life, you can no longer perform cleaning. You can continue to print, but the quality of the printouts cannot be guaranteed.
I-22	Set Wi-Fi from the **Push Button Setup (WPS)**.	Push the access point button. If there is no button on the access point, open the access point setting window, and then click the button displayed in the software.
I-23	Set Wi-Fi from the **PIN Code (WPS)**.	Enter the PIN code displayed on the LCD screen into the access point or computer within two minutes.
I-31	Set Wi-Fi from the **Easy Connect with App**.	Install the software on your computer, and then press the OK button when Wi-Fi setup starts.
I-41	**Paper Setup Auto Display** is disabled. Some functions cannot be used.	If **Paper Setup Auto Display** is disabled, you cannot use AirPrint.
I-60	Your computer may not support WSD (Web Services for Devices).	The scan to computer (WSD) feature is only available for computers running English versions of Windows 11, Windows 10, Windows 8.1, Windows 8 or Windows 7. Make sure that the printer is correctly connected to the computer.
Recovery Mode	The printer has started in recovery mode because the firmware update failed.	Follow the steps below to retry the firmware update. 1. Connect the computer and the printer with a USB cable. ***Important:*** ❑ *During recovery mode, you cannot update the firmware over a network connection. You can only use a USB connection.* ❑ *Use a USB 2.0 type A-B cable.* 2. Download the latest firmware from your local Epson website to your computer, and then start the update.

*1 **Note for users in regions other than the U.S. and Canada:** In some print cycles a very small amount of surplus ink may be collected in the borderless printing ink pad. To prevent ink leakage from the pad, the product is designed to stop borderless printing when the pad has reached its limit. Whether and how often this is required will vary according to the number of pages you print using the borderless print option. The need for replacement of the pad does not mean that your printer has ceased to operate in accordance with its specifications. The printer will advise you when the pad requires replacing and this can only be performed by an authorised Epson Service provider. The Epson warranty does not cover the cost of this replacement.

*2 **Note for users in the U.S. and Canada with products other than the ET-2900U:** In some print cycles a very small amount of surplus ink may be collected in the borderless printing ink pad. To prevent ink leakage from the pad, the product is designed to stop borderless printing when the pad has reached its limit. Whether and how often this is required will vary according to the number of pages you print using the borderless print option. The need for replacement of the pad does not mean that your printer has ceased to operate in accordance with its specifications. The printer will advise you when the pad requires replacing and this can only be performed by an authorized Epson Service provider. If this happens during the standard warranty of the product, the replacement of borderless printing ink pads is covered under the standard warranty.

*3 **Note for ET-2900U users:** In some print cycles a very small amount of surplus ink may be collected in the borderless printing ink pad. To prevent ink leakage from the pad, the product is designed to stop borderless printing when the pad has reached its limit. Whether and how often this is required will vary according to the number of pages you print using the borderless print option. The need for replacement of the pad does not mean that your printer has ceased to operate in accordance with its specifications. The printer will advise you when the pad requires replacing and this can only be performed by an authorized Epson Service provider. If this happens, contact Epson.

Paper Gets Jammed

Check the error displayed on the control panel and follow the instructions to remove the jammed paper, including any torn pieces. Next, clear the error.

Important:

- *Remove the jammed paper carefully. Removing the paper with too much force may damage the printer.*
- *When removing jammed paper, avoid tilting the printer, placing it vertically, or turning it upside down; otherwise ink may leak.*

Removing Jammed Paper

Caution:

Never touch the buttons on the control panel while your hand is inside the printer. If the printer starts operating, it could cause an injury. Be careful not to touch the protruding parts, or they could also cause an injury.

1. Remove the jammed paper.

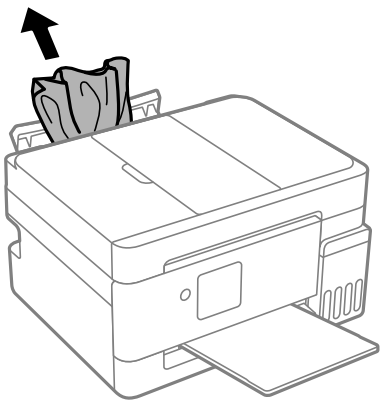

2. Raise the control panel.

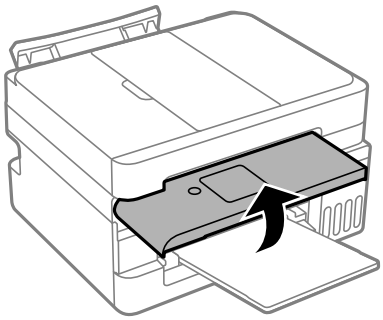

3. Open the scanner unit until it clicks.

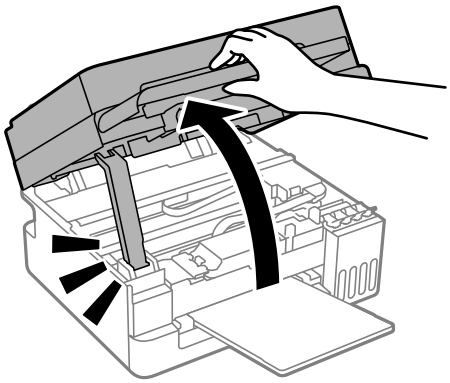

Caution:

Be careful not to trap your hand or fingers when opening or closing the scanner unit. Otherwise you may be injured.

Important:

Do not touch the parts shown in the illustration inside the printer. Doing so may cause a malfunction.

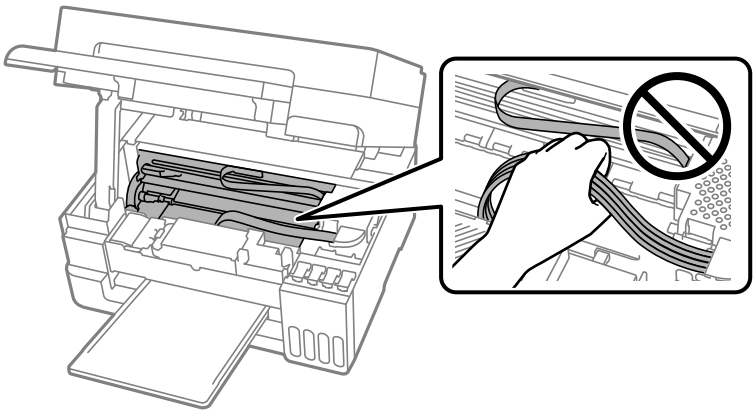

4. Remove the jammed paper.

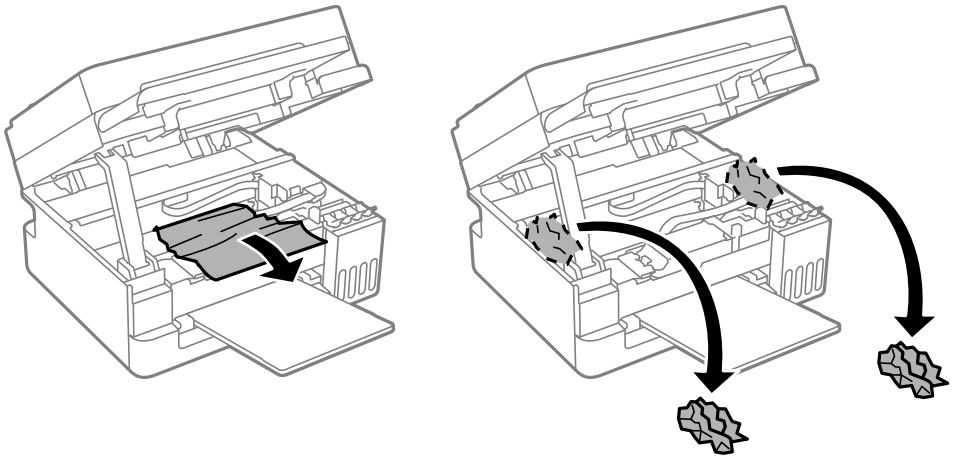

5. Close the scanner unit.

   For safety, the scanner unit is closed in two steps.

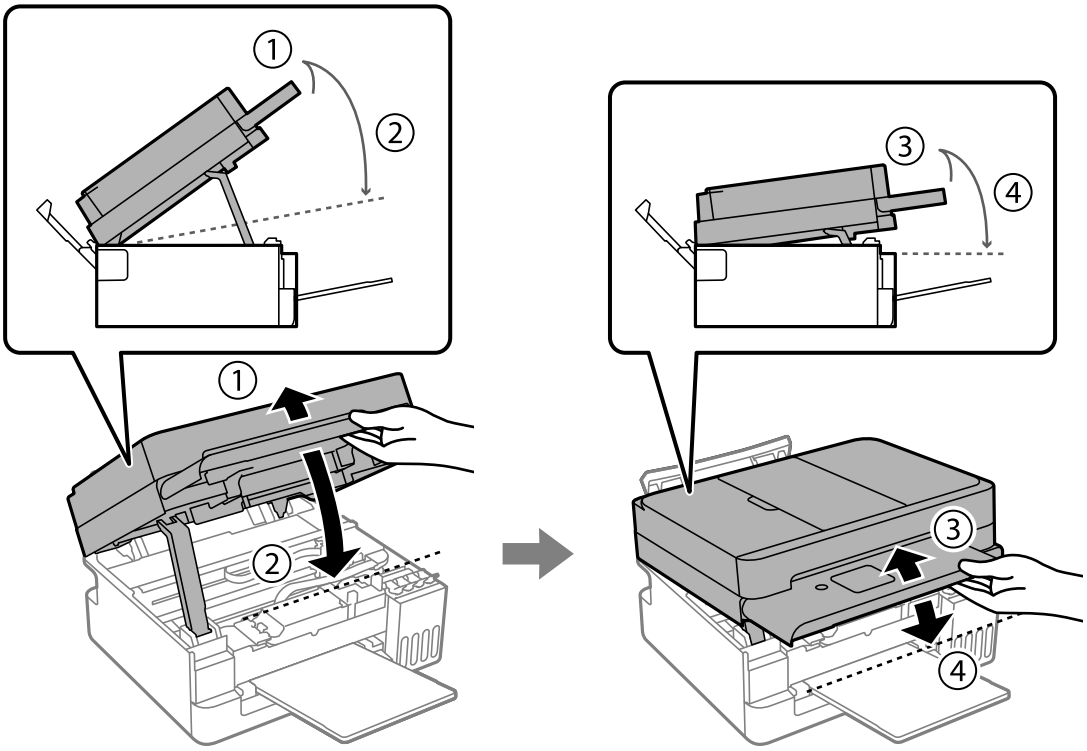

Note:
The scanner unit must be closed completely before it can be opened again.

Important:

Do not touch the parts shown in the illustration inside the printer. Doing so may cause a malfunction.

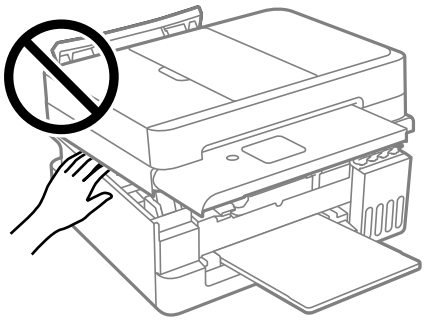

6. Close the control panel.

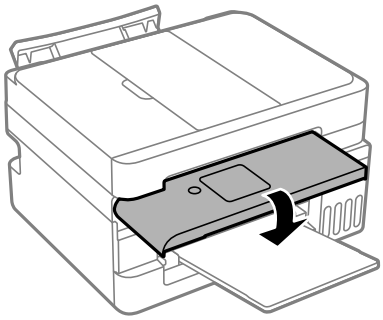

Removing Jammed Paper from the ADF

1. Open the ADF cover.

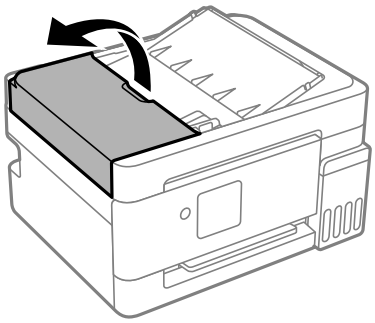

2. Remove the jammed paper.

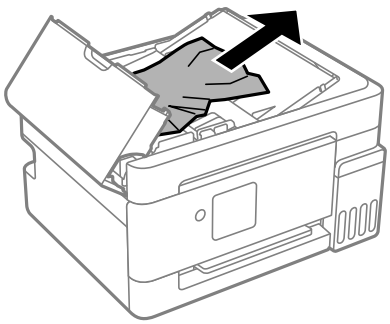

3. Raise the ADF input tray.

> ***Important:***
>
> *Make sure that you open the ADF cover before raising the ADF input tray. Otherwise, the ADF may be damaged.*

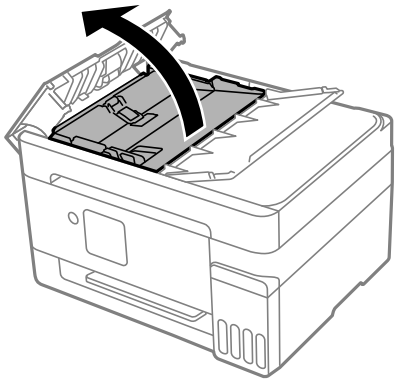

4. Remove the jammed paper.

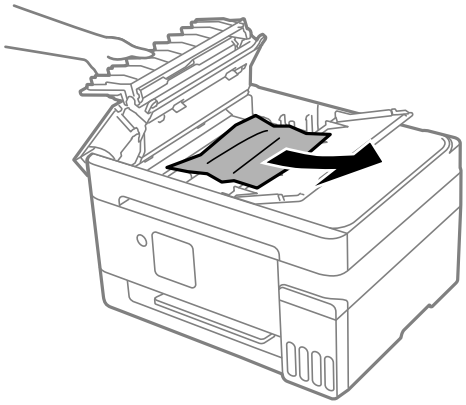

5. Close the ADF cover and ADF input tray until it clicks.

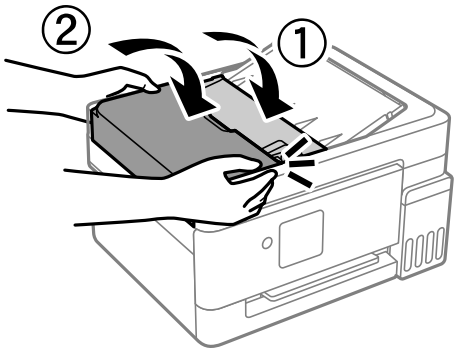

Preventing Paper Jams

Check the following if paper jams occur frequently.

- ❏ Place the printer on a flat surface and operate in the recommended environmental conditions.
  "Environmental Specifications" on page 255
- ❏ Use paper supported by this printer.
  "Available Paper and Capacities" on page 222
- ❏ Follow paper handling precautions.
  "Paper Handling Precautions" on page 29
- ❏ Load paper in the correct direction, and slide the edge guide against the edge of the paper.
  "Loading Paper in the Rear Paper Feeder" on page 32
- ❏ Do not load more than the maximum number of sheets specified for paper.
  "Available Paper and Capacities" on page 222
- ❏ Load one sheet of paper at a time if you have loaded several sheets of paper.
- ❏ Make sure the paper size and paper type settings match the actual paper size and paper type loaded in the printer.
  "List of Paper Types" on page 30
- ❏ There may be a foreign object inside the printer.
  "If you cannot clear a paper jam or paper out error" on page 215

Related Information

➡ "If you cannot clear a paper jam or paper out error" on page 215

It is Time to Refill the Ink

Ink Bottle Handling Precautions

Note:
The product has a low ink alert system. The accuracy of this system depends on the user refilling the ink tanks correctly. The product cannot directly measure the ink levels in the tanks; instead it estimates the amount of ink remaining by internally monitoring ink usage. The low ink alert system may generate inaccurate messages if the ink tanks are not refilled according to these instructions.

As a precaution, perform regular visual inspections of the ink tanks to ensure ink levels do not fall below the lower lines. Continued use of the product when any ink level is below the lower line on the tank could damage the product.

Read the following instructions before refilling ink.

Storing precautions for ink

- ❏ Keep the ink bottles out of direct sunlight.
- ❏ Do not store the ink bottles in high or freezing temperatures.
- ❏ Epson recommends using the ink bottle before the date printed on the package.
- ❏ When storing or transporting an ink bottle, do not tilt the bottle and do not subject it to impacts or temperature changes. Otherwise, ink may leak even if the cap on the ink bottle is tightened securely. Be sure to keep the ink bottle upright when tightening the cap, and take precautions to prevent ink from leaking when transporting the bottle, such as putting the bottle in a bag.
- ❏ After bringing an ink bottle inside from a cold storage site, allow it to warm up at room temperature for at least three hours before using it.
- ❏ Once you open an ink bottle, we recommend using it as soon as possible.

Handling precautions for refilling ink

- ❏ To ensure you receive premium print quality and to help protect your print head, a variable ink safety reserve remains in the ink tank when your printer indicates to refill ink. The yields quoted for you do not include this reserve.
- ❏ For optimum print results, do not maintain low ink levels for extended periods of time.
- ❏ Use ink bottles with the correct part code for this printer.
- ❏ The ink for this printer must be handled carefully. Ink may splatter when the ink tanks are being filled or refilled with ink. If ink gets on your clothes or belongings, it may not come off.
- ❏ Do not shake too vigorously or squeeze the ink bottles.
- ❏ Prolonged use of the printer when the ink level is below the lower line could damage the printer. Fill the ink tank to the upper line while the printer is not operating. To display the correct ink level estimate, reset the ink level after filling the tank.

Ink consumption

- ❏ To maintain optimum print head performance, some ink is consumed from all ink tanks during maintenance operations such as print head cleaning. Ink may also be consumed when you turn the printer on.
- ❏ When printing in monochrome or grayscale, color inks instead of black ink may be used depending on the paper type or print quality settings. This is because a mixture of color inks is used to create black.

- ❏ The ink in the ink bottles supplied with your printer is partly used during initial setup. In order to produce high quality printouts, the print head in your printer will be fully charged with ink. This one-off process consumes a quantity of ink and therefore these bottles may print fewer pages compared to subsequent ink bottles.
- ❏ Quoted yields may vary depending on the images that you are printing, the paper type that you are using, the frequency of your prints and environmental conditions such as temperature.
- ❏ Visually check ink levels in the actual ink tanks. Prolonged use of the printer when the ink level is below the lower line could damage the printer. To display the correct ink level estimates, reset the ink level after filling the tank.

Refilling the Ink Tanks

Note:
The product has a low ink alert system. The accuracy of this system depends on the user refilling the ink tanks correctly. The product cannot directly measure the ink levels in the tanks; instead it estimates the amount of ink remaining by internally monitoring ink usage. The low ink alert system may generate inaccurate messages if the ink tanks are not refilled according to these instructions.

As a precaution, perform regular visual inspections of the ink tanks to ensure ink levels do not fall below the lower lines. Continued use of the product when any ink level is below the lower line on the tank could damage the product.

1. Select **More** on the home screen.

   To select an item, use the ◀▶ buttons, and then press the OK button.

2. Select **Maintenance** > **Fill Ink**.

3. Press the ▼ button to read all the safety and usage precautions for filling ink, and then press the OK button to continue.

4. Open the scanner unit until it clicks.

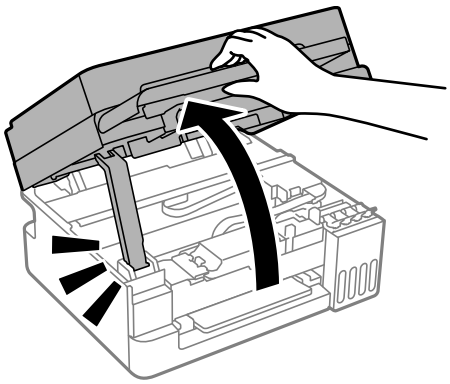

5. Open the ink tank cap.

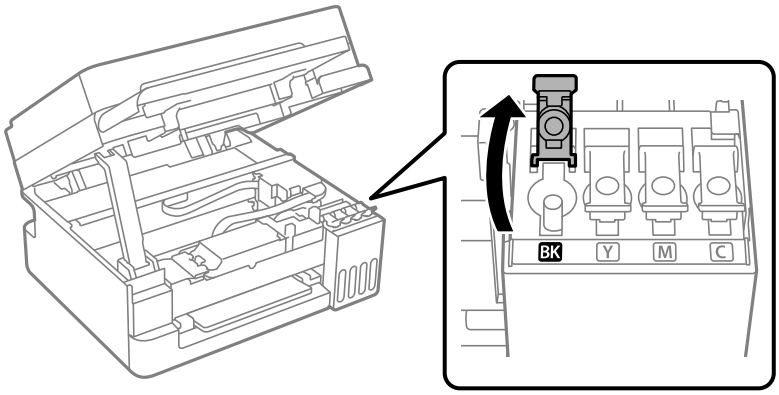

> ***Important:***
> *Make sure that the color of the ink tank matches the ink color that you want to refill.*

6. While holding the ink bottle upright, turn the cap slowly to remove it.

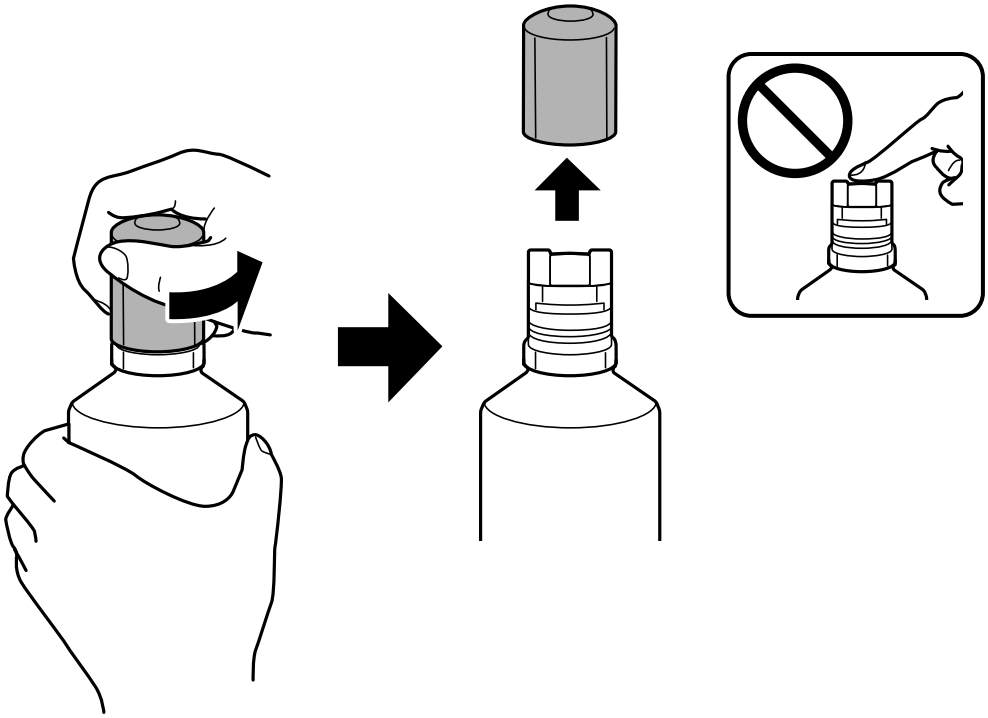

> ***Important:***
> - *Epson recommends the use of genuine Epson ink bottles.*
> - *Be careful not to spill any ink.*
> - *Do not touch the top of the ink bottle after removing the cap; otherwise ink may get on your hands.*

7. Check the upper line (a) in the ink tank.

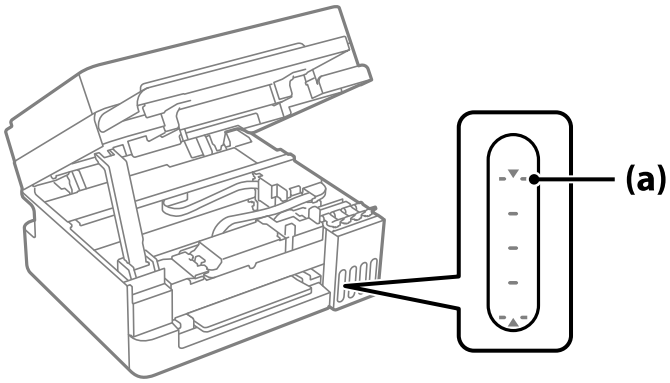

8. Align the top of the ink bottle with the filling port, and then insert it straight into the port to fill ink until it stops automatically at the upper line.

   When you insert the ink bottle into the filling port for the correct color, ink starts pouring and the flow stops automatically when the ink reaches the upper line.

   If the ink does not start flowing into the tank, remove the ink bottle and reinsert it.

   However, do not remove and reinsert the ink bottle when the ink has reached the upper line; otherwise ink may leak or the printer may be damaged if the ink rises above the upper line.

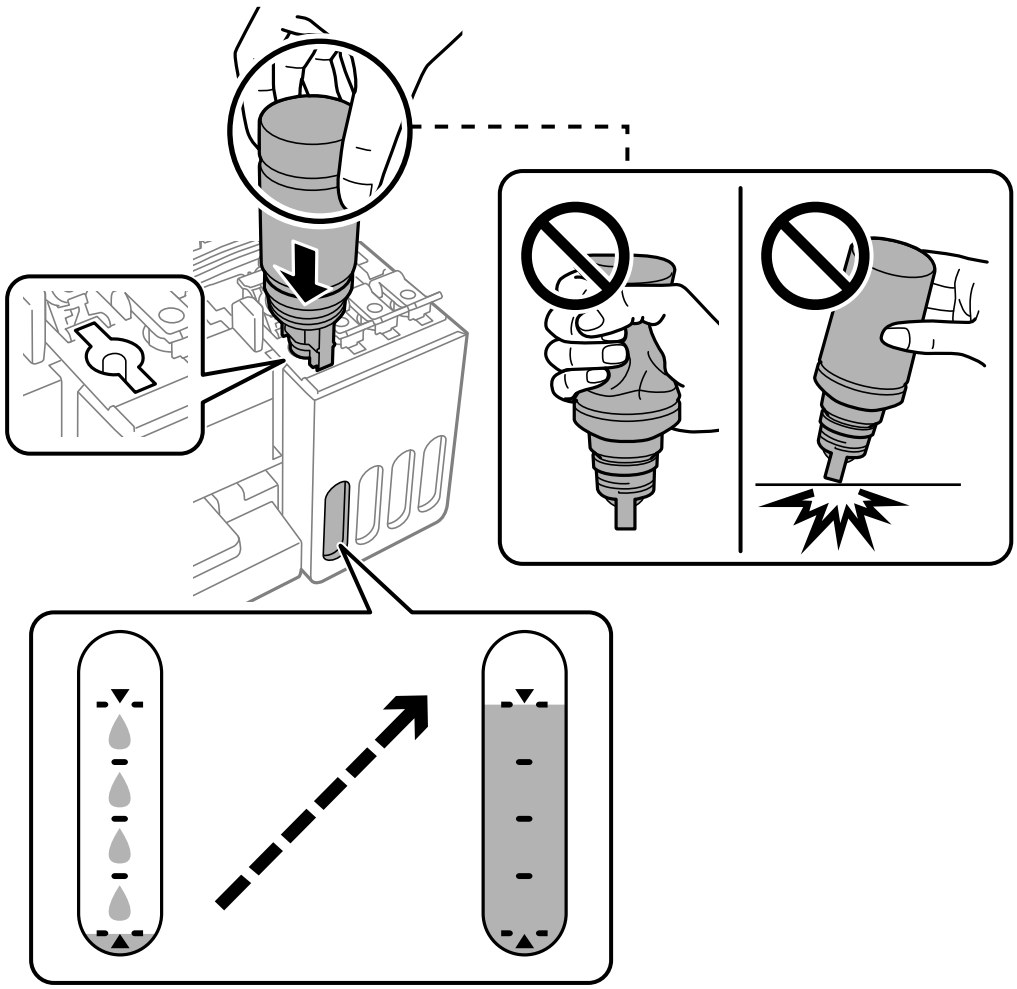

9. When you have finished filling the ink, remove the ink bottle.

> ***Important:***
> *Do not leave the ink bottle inserted; otherwise the bottle may be damaged or ink may leak.*

Note:
If any ink remains in the ink bottle, tighten the cap and store the bottle upright for later use.

10. Close the ink tank cap securely.

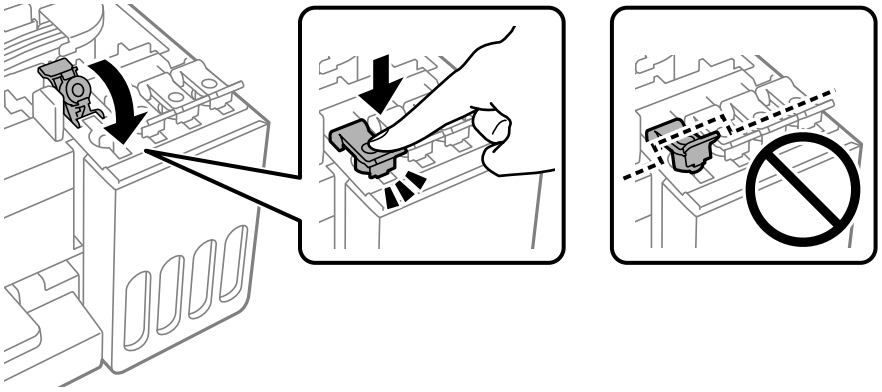

11. Close the scanner unit.

    For safety, the scanner unit is closed in two steps.

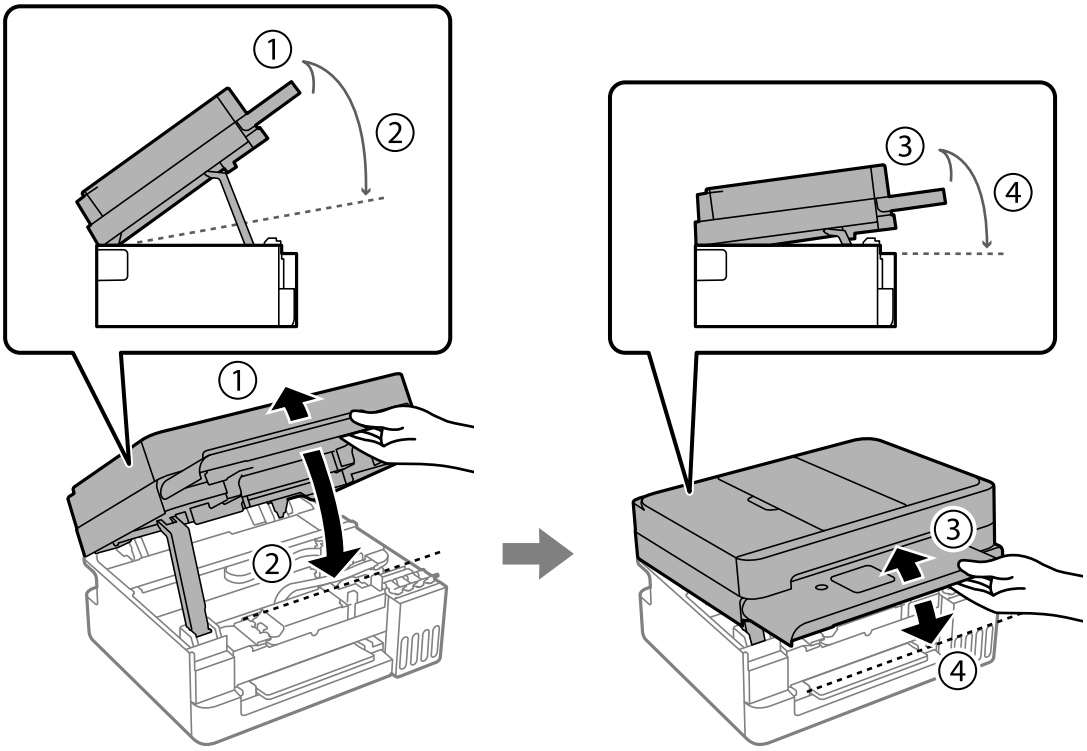

Note:
The scanner unit must be closed completely before it can be opened again.

12. Press the ⏻ button, and then follow the on-screen instructions to reset the ink level.

> ***Important:***
> - *Even if you do not refill ink up to the upper line on the ink tank, you can continue using the printer. To keep your printer operating at its best, however, fill ink tank up to the upper line and reset the ink level immediately.*
> - *Unless you reset the ink level, the ink level displayed does not change even after refilling the ink.*

Related Information

➡ "Ink Bottle Handling Precautions" on page 199
➡ "Ink Bottle Codes" on page 227

Notes on Resetting the Ink Level

Be sure to reset the ink level after refilling the ink.

If you refilled two or more ink tanks, you need to select all of the tanks that you refilled and reset their ink levels.

Unless you reset the ink level, the ink level displayed does not change even after refilling the ink.

Related Information

➡ "Checking the Ink Levels" on page 110

It is Time to Replace the Maintenance Box

Maintenance Box Handling Precautions

Read the following instructions before replacing the maintenance box.

❏ Do not touch the sections shown in the illustration. Doing so may prevent normal operation and you may get smeared with ink.

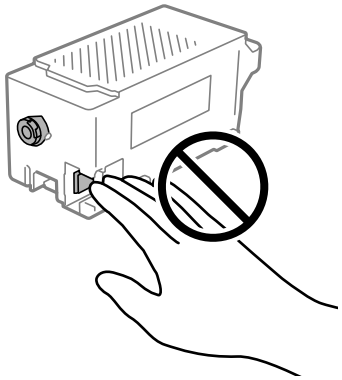

❏ Do not drop the maintenance box or subject it to strong shocks.

❏ Do not replace the maintenance box during printing; otherwise, ink may leak.

❏ Do not remove the maintenance box and its cover except when replacing the maintenance box; otherwise ink may leak.

❏ When the cover cannot be reattached, the maintenance box may not be installed correctly. Remove the maintenance box, and reinstall it.

❏ Do not tilt the used maintenance box until after it is sealed in the plastic bag; otherwise ink may leak.

❏ Do not touch the openings in the maintenance box as you may get smeared with ink.

❏ Do not reuse a maintenance box which has been removed and left detached for a long period. Ink inside the box will have solidified and no more ink can be absorbed.

❏ Keep the maintenance box out of direct sunlight.

❏ Do not store the maintenance box in high or freezing temperatures.

Replacing a Maintenance Box

Note:
For ET-2900U only

Maintenance boxes are provided to you as part of the ReadyPrint program

In some print cycles a very small amount of surplus ink may be collected in the maintenance box. To prevent ink leakage from the maintenance box, the printer is designed to stop printing when the absorbing capacity of the maintenance box has reached its limit. Whether and how often this is required will vary according to the number

of pages you print, the type of material that you print and the number of cleaning cycles that the printer performs. Replace the maintenance box when you are prompted to do so. The Epson Status Monitor, your LCD, or lights on the control panel will advise you when this part needs replacing. The need for replacement of the box does not mean that your printer has ceased to operate in accordance with its specifications. The Epson warranty does not cover the cost of this replacement. It is a user-serviceable part.

Note:

- *When the maintenance box is full, you cannot print or clean the print head until the maintenance box is replaced, in order to avoid ink leakage. However, you can perform operations that do not use ink, such as scanning.*
- *When the following screen is displayed, contact Epson support.*

  You cannot perform borderless printing until the part is replaced, but you can continue to print with borders.

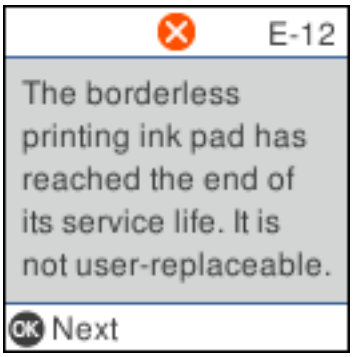

1. Remove the new maintenance box from its package.

   Important:

   Do not touch the green chip on the side of the maintenance box. Doing so may prevent normal operation and printing.

   Note:

   A transparent bag for the used maintenance box is provided with the new maintenance box.

2. Open the scanner unit until it clicks.

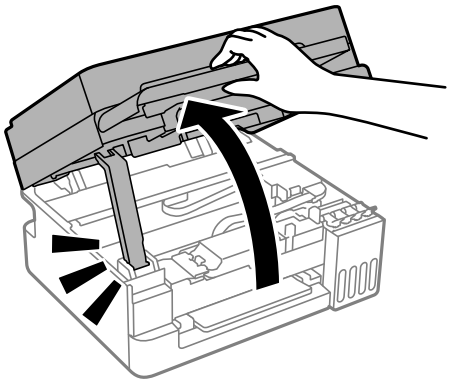

3. Remove the cover.

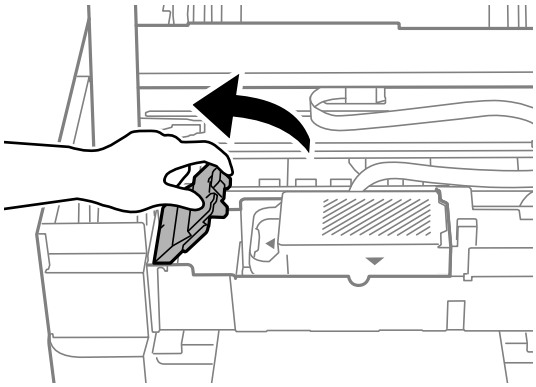

4. Remove the used maintenance box.

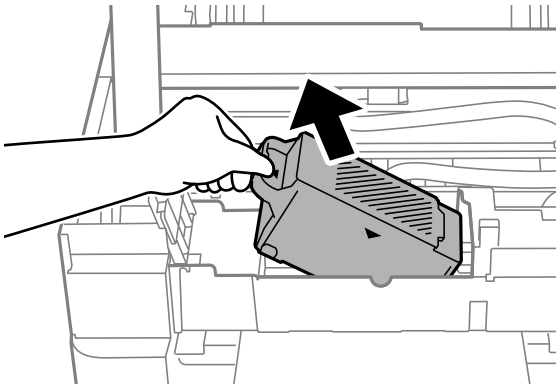

Note:
Do not hold the maintenance box as shown in the following illustration.

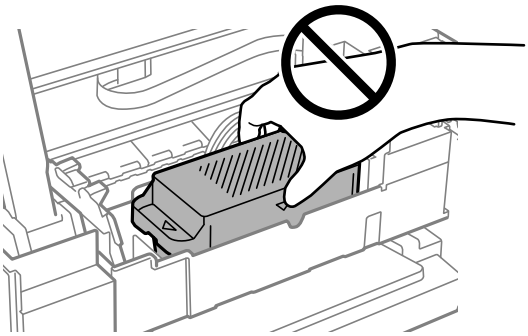

Important:

Do not touch the sections shown in the illustration. Doing so may prevent normal operation and you may get smeared with ink.

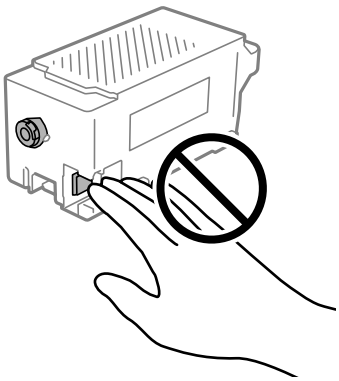

5. Put the used maintenance box in the transparent bag that came with the new maintenance box and seal the bag shut.

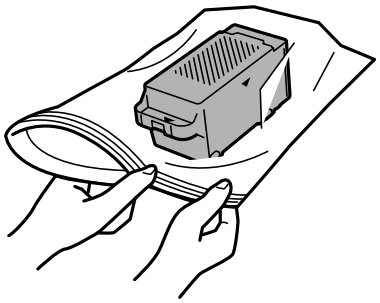

6. Insert the new maintenance box all the way into the printer. Make sure you insert the box in the correct direction.

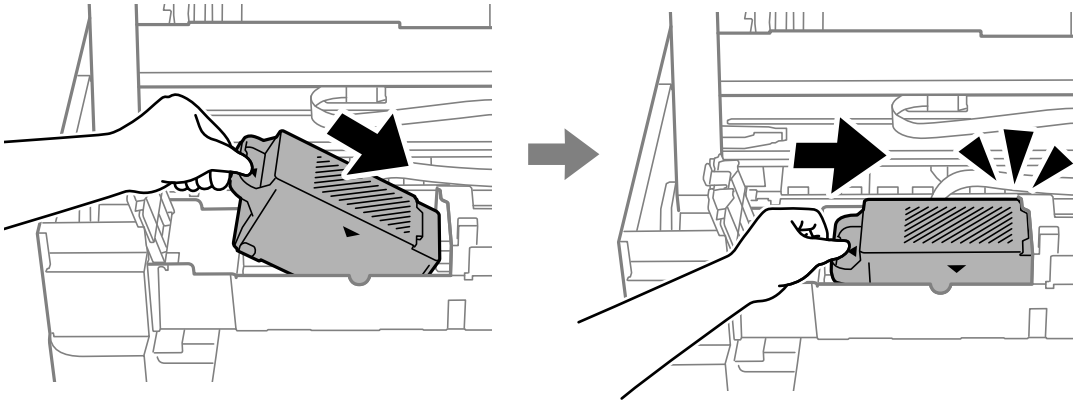

7. Reattach the cover.

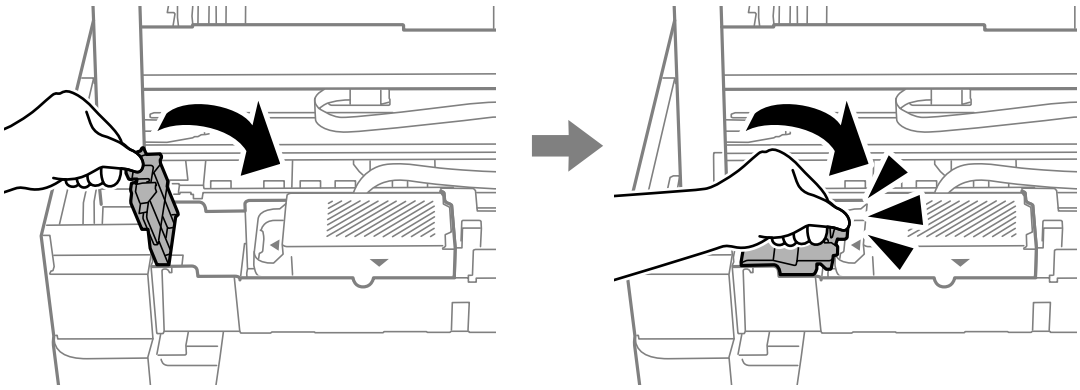

8. Close the scanner unit.

   For safety, the scanner unit is closed in two steps.

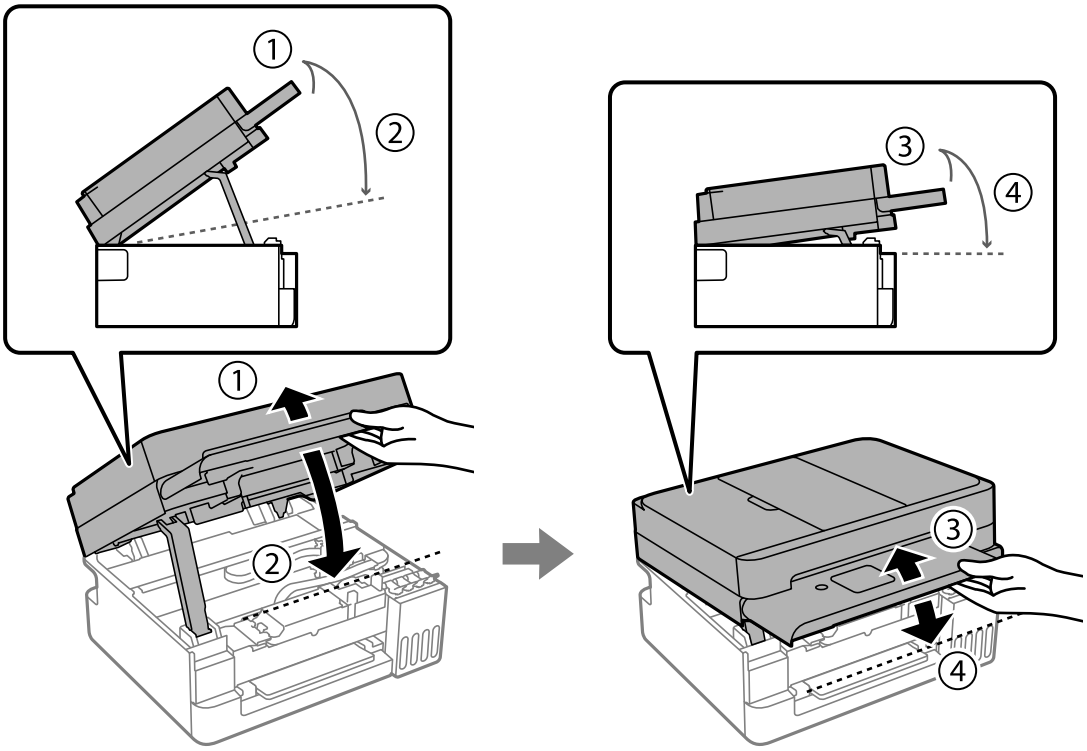

   Note:
   The scanner unit must be closed completely before it can be opened again.

9. Review the message on the LCD screen, and then press the OK button.

10. Review the message on the LCD screen, and then press the ⊡ button.

Related Information

➡ "Maintenance Box Handling Precautions" on page 205

Cannot Operate the Printer as Expected

The Printer Does Not Turn On or Off

Power Does Not Turn On

One of the following situations may be the cause.

The power cord is not properly plugged into the electrical outlet.

Solutions

Make sure the power cord is securely plugged in.

The ⏻ button was not pressed for long enough.

Solutions

Hold down the ⏻ button for a little longer.

The printer is operating.

Solutions

Check that the power light is off before you turn on the power.

The Printer Does Not Turn On Automatically

Auto Power On is disabled.

Solutions

- ❑ Select **Settings** > **Basic Settings**, and then enable the **Auto Power On** Setting.
- ❑ When connecting using the USB cable, make sure you connect it securely to the printer and the computer.
- ❑ When connecting over a network, make sure the printer's home screen shows that the printer is properly connected to a network.

➡ "Guide to the Network Icons" on page 26

Power Does Not Turn Off

The ⏻ button was not pressed for long enough.

Solutions

Hold down the ⏻ button for a little longer. If you still cannot turn off the printer, unplug the power cord. Then plug the power cord back in and turn the printer back on and off by pressing the ⏻ button, in order avoid drying out the print head.

It may take some time to turn off the power.

Solutions

When Auto Power On is enabled, it takes longer to turn off the power. See the related information for details.

➡ "Auto Power On:" on page 236

Power Turns Off Automatically

The Power Off Settings or Power Off Timer feature is enabled.

Solutions

- ❑ Select **Settings** > **Printer Setup** > **Power Off Settings**, and then disable the **Power Off If Inactive** and **Power Off If Disconnected** settings.

❏ Select **Settings** > **Printer Setup**, and then disable the **Power Off Timer** Setting.

Note:
*Your product may have the **Power Off Settings** or **Power Off Timer** feature depending on the location of purchase.*

Operations are Slow

Printing Is Too Slow

One of the following situations may be the cause.

Unnecessary applications are running.

Solutions

Close any unnecessary applications on your computer or mobile device.

The print quality setting is too high.

Solutions

Lower the quality setting.

Bidirectional printing is disabled.

Solutions

Enable the bidirectional (or high speed) setting. When this setting is enabled, the print head prints while moving in both directions, and the printing speed increases.

❏ Windows

Select **Bidirectional Printing** on the printer driver's **More Options** tab.

❏ Mac OS

Select **System Preferences** (or **System Settings**) from the Apple menu > **Printers & Scanners** (or **Print & Scan** or **Print & Fax**), and then select the printer. Click **Options & Supplies** > **Options** (or **Driver**). Select On as the **Bidirectional Printing** setting.

Quiet Mode is enabled.

Solutions

Disable **Quiet Mode**. The printing speed slows down when the printer is running in **Quiet Mode**.

❏ Control panel

Select on the home screen, and then select **Off**.

❏ Windows

Select **Off** as the **Quiet Mode** setting on the printer driver's **Main** tab.

❏ Mac OS

Select **System Preferences** (or **System Settings**) from the Apple menu > **Printers & Scanners** (or **Print & Scan**, **Print & Fax**), and then select the printer. Click **Options & Supplies** > **Options** (or **Driver**). Select Off as the **Quiet Mode** setting.

There may be network connection problems with the wireless router.

Solutions

Reboot the wireless router while taking into consideration other users connected to the network. If this does not solve the problem, place the printer closer to your wireless router or see the documentation provided with the router.

The printer is printing high-density data such as photos on plain paper.

Solutions

If you are printing high-density data such as photos on plain paper, printing may take some time in order to maintain print quality. This is not a malfunction.

Printing Slows Down Dramatically During Continuous Printing

The printer has slowed down to prevent the printer mechanism from overheating and being damaged.

Solutions

You can continue printing. To return to normal printing speed, leave the printer idle for at least 30 minutes with the power turned on.

Scanning Speed Is Slow

The scanning resolution setting is too high.

Solutions

Try scanning at a lower resolution.

LCD Screen Gets Dark

The printer is in sleep mode.

Solutions

Press any button on the control panel to return the LCD screen to its former state.

The Printer Is Loud

Quiet Mode is disabled.

Solutions

If the printer is too loud, enable **Quiet Mode**. Enabling this feature may reduce printing speed.

❏ Control panel

Select on the home screen, and then enable **Quiet Mode**.

❏ Windows printer driver

Enable **Quiet Mode** on the **Main** tab.

❏ Mac OS printer driver

Select **System Preferences** (or **System Settings**) from the Apple menu > **Printers & Scanners** (or **Print & Scan**, **Print & Fax**), and then select the printer. Click **Options & Supplies** > **Options** (or **Driver**). Select **On** as the **Quiet Mode** setting.

The Date and Time Are Incorrect

Error occurred in power supply.

Solutions

If there is power failure caused by a lightning strike or the power is left off for a long time, the clock may show the wrong time. Set the date and the time correctly in **More** > **Settings** > **Printer Setup** > **Date/Time Settings** on the control panel.

The Root Certificate Needs to be Updated

The root certificate has expired.

Solutions

Run Web Config, and then update the root certificate.

➡ "Application for Configuring Printer Operations (Web Config)" on page 232

Cannot Perform Manual 2-sided Printing (Windows)

EPSON Status Monitor 3 is disabled.

Solutions

On the printer driver's **Maintenance** tab, click **Extended Settings**, and then select **Enable EPSON Status Monitor 3**.

Manual 2-sided printing may not be available when the printer is accessed over a network or is used as a shared printer.

The Print Settings Menu is Not Displayed (Mac OS)

The Epson Printer Driver has Not been Installed Correctly.

Solutions

If the **Print Settings** menu is not displayed on macOS Catalina (10.15) or later, macOS High Sierra (10.13), macOS Sierra (10.12), OS X El Capitan (10.11), OS X Yosemite (10.10), OS X Mavericks (10.9), the Epson printer driver has not been installed correctly. Enable it from the following menu.

Select **System Preferences** (or **System Settings**) from the Apple menu > **Printers & Scanners** (or **Print & Scan** or **Print & Fax**), remove the printer, and then add the printer again.

In macOS Mojave (10.14), you cannot access **Print Settings** in applications made by Apple such as TextEdit.

A Message Prompting You to Reset the Ink Level is Displayed Even After Refilling the Ink

The ink level was not reset.

Solutions

Reset the ink level.

➡ "Reset the Ink Level" on page 110

The Ink Level Display does not Change Even After Refilling the Ink

The ink level was not reset.

Solutions

Reset the ink level.

➡ "Reset the Ink Level" on page 110

If you cannot clear a paper jam or paper out error

There may be foreign objects inside the printer. Follow the steps below to remove them.

1. Turn off the printer by pressing the ⏻ button.
2. Unplug the power cord, and then disconnect the power cord from the printer.

> ***Important:***
> *Unplug the power cord when the power light is off. Otherwise, the print head will not return to the home position, which can cause the ink to dry and make printing impossible.*

3. Check the following objects to make sure there are no foreign objects inside the printer.

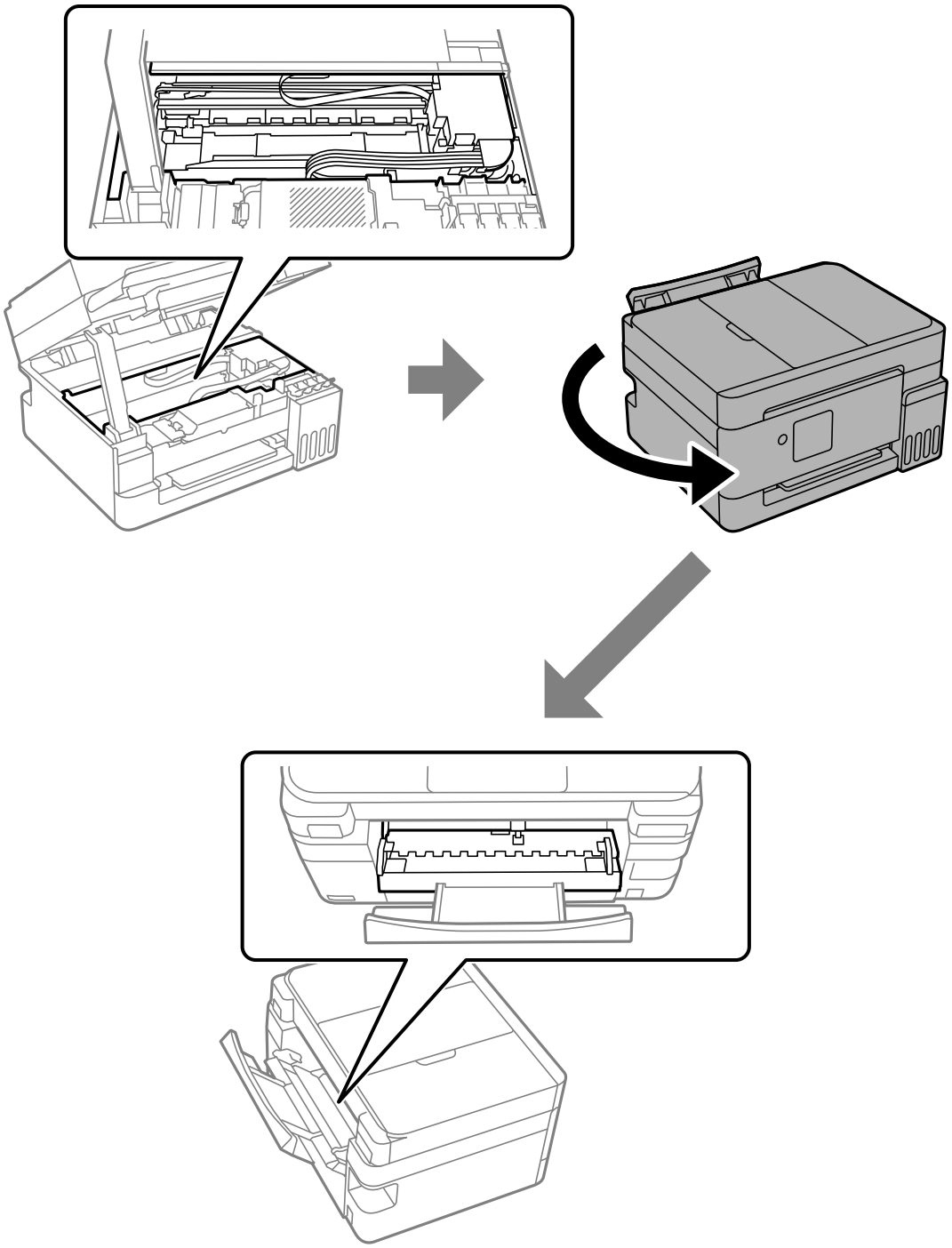

4. If you find any foreign objects, remove them with tweezers or a similar tool.

Important:

Be careful not to touch the objects shown in the following illustration when removing foreign objects, or the printer may be damaged.

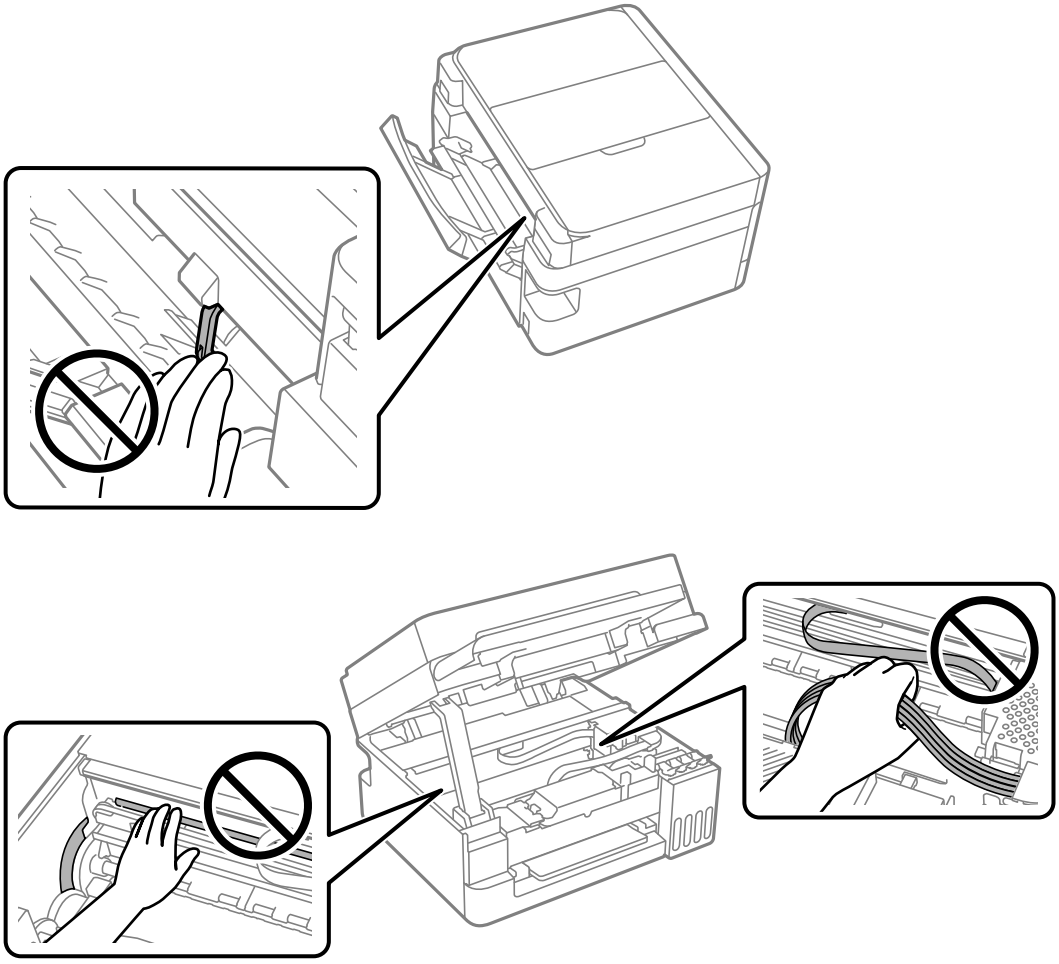

If you cannot remove the foreign objects, go to step 5, If you are able to remove them, go to step 7.

5. With the rear paper feeder pulled out, hold both sides of the front of the printer, and tilt the printer approximately 45 degrees to the rear.

Important:

When tilting the printer, be careful not to shake it, otherwise ink may leak or the printer may be damaged.

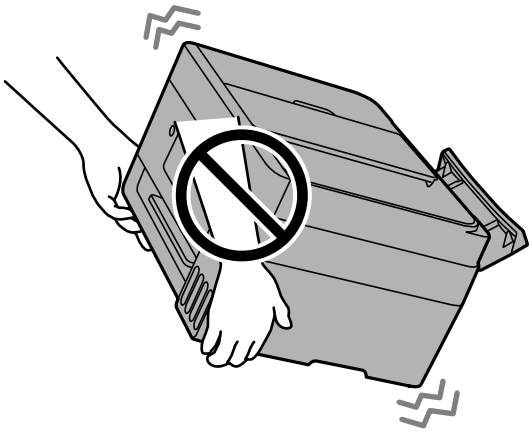

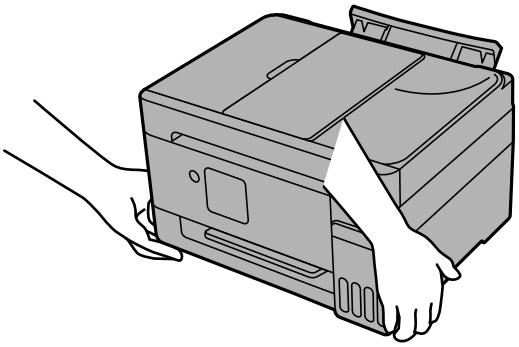

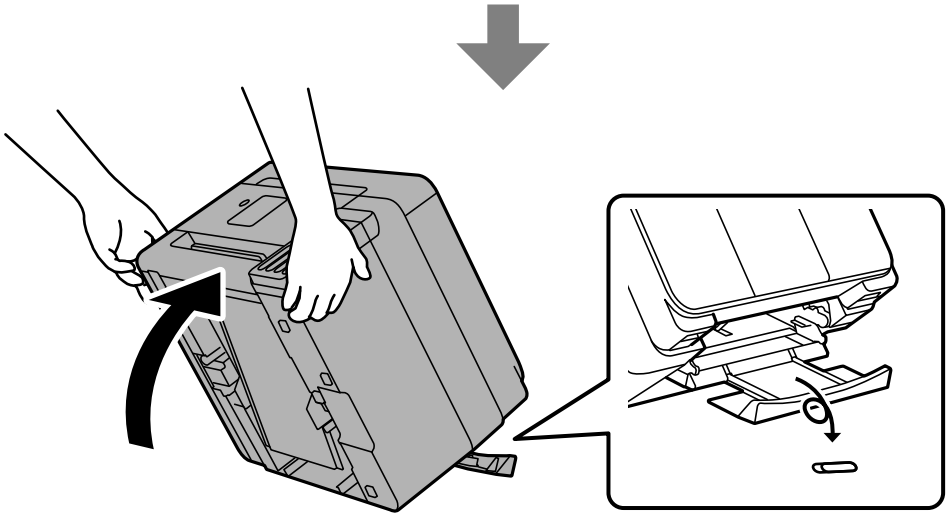

6. After slowly returning the printer to the horizontal position, check the following area. If you find any foreign objects, remove them with tweezers or a similar tool. Next, check through the gap in the rear paper feeder to confirm that all foreign objects have been removed.

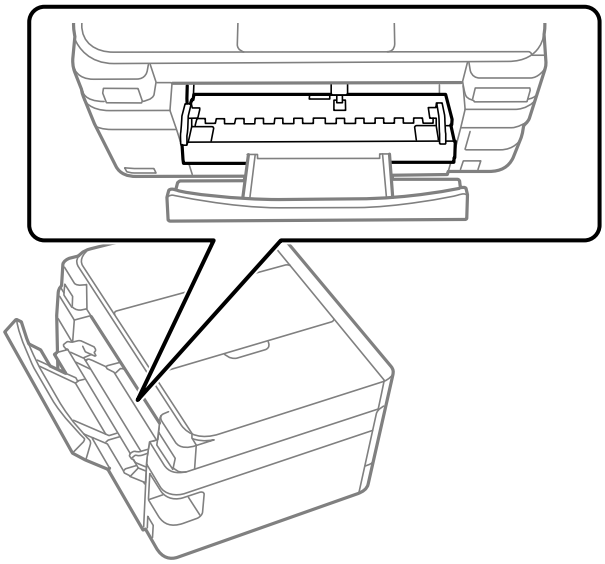

7. Connect the power cord, and then turn on the printer.

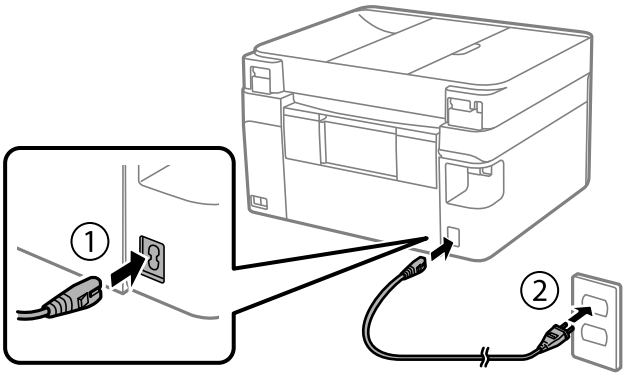

Note:
If the paper jam or paper out error continues to occur, contact Epson support.

Cannot Solve Problem

If you cannot solve the problem after trying all of the solutions, contact Epson support.

If you cannot solve printing or copying problems, see the following related information.

Related Information

➡ "Cannot Solve Printing or Copying Problems" on page 220
➡ "Contacting Epson Support" on page 262

Cannot Solve Printing or Copying Problems

Try the solutions in the order shown, until you solve the problem.

❏ Make sure you match the paper type loaded in the printer and the paper type selected on the printer to the paper type setting in the printer driver.

"Paper Size and Type Settings" on page 30

❏ Use a higher quality setting on the control panel or in the printer driver.

❏ To check the actual ink remaining, visually check the ink levels in the printer's tanks. Refill the ink tanks if the ink levels are below the lower lines.

❏ Align the print head.

"Aligning the Print Head" on page 116

❏ Run a nozzle check to see if the print head nozzles are clogged.

If there are missing segments in the nozzle check pattern, the nozzles may be clogged. Run a nozzle check and Cleaning alternately 3 times or Power Cleaning once, and check if the clogging has cleared.

Note that print head cleaning uses some ink.

If there are still missing segments in the nozzle check pattern, turn off the printer and wait for at least 12 hours without printing, and then run a nozzle check. If print quality has still not improved, run Cleaning and a nozzle check again. If it has still not improved, run Power Ink Flushing.

"Checking and Cleaning the Print Head" on page 112

"Running Power Cleaning" on page 114

"Running Power Ink Flushing" on page 115

❏ If the problem is clogging, leaving the printer for a while without printing may solve the problem.

You can check the following items while the printer is off.

❏ Make sure you are using genuine Epson ink bottles.

Try to use genuine Epson ink bottles. This product is designed to adjust colors based on the use of genuine Epson ink bottles. The use of non-genuine ink bottles may cause print quality to decline.

❏ Make sure there are no paper fragments left inside the printer.

When you remove the paper, do not touch the translucent film with your hand or the paper.

❏ Make sure the paper is loaded with the printable side facing up and not curled.

"Paper Handling Precautions" on page 29

"Available Paper and Capacities" on page 222

"Unavailable Paper Types" on page 227

If you cannot solve the problem by checking the solutions above, contact Epson support.

Related Information

➡ "Before Contacting Epson" on page 262

➡ "Contacting Epson Support" on page 262

Product Information

Paper Information. 222

Consumable Products Information. 227

Software Information. 229

Settings Menu List. 234

Product Specifications. 247

Regulatory Information. 256

Paper Information

Available Paper and Capacities

Genuine Epson Paper for North America

Epson recommends using genuine Epson paper to ensure high-quality printouts.

Note:

- *The availability of paper varies by location. For the latest information on paper available in your area, contact Epson support.*
- *See the following for information on available paper types for borderless and 2-sided printing.*

"Paper for Borderless Printing" on page 225

"Paper for 2-Sided Printing" on page 226

Paper suitable for printing documents

Media Name	Size	Loading Capacity (Sheets)
Epson Multipurpose Plus Paper	Letter	100
Epson Bright White Premium Paper	Letter	80
Epson Bright White Paper / Epson Bright White Pro Paper / Epson EcoTank Premium Paper	Letter	80

Paper suitable for printing documents and photos

Media Name	Size	Loading Capacity (Sheets)
Epson High Quality Ink Jet Paper	A4	80
Epson Presentation Paper Matte	A4, Letter	80
	Legal	1
Epson Premium Presentation Paper Matte	8×10 in. (203×254 mm), Letter	20
Epson Premium Presentation Paper Matte Double-Sided	Letter	1

Paper suitable for printing photos

Media Name	Size	Loading Capacity (Sheets)
Epson Value Photo Paper Glossy	4×6 in. (102×152 mm), A4, Letter	20
Epson Photo Paper Glossy	4×6 in. (102×152 mm), A4, Letter	20

Media Name	Size	Loading Capacity (Sheets)
Epson Premium Photo Paper Glossy	4×6 in. (102×152 mm), 5×7 in. (127×178 mm), 8×10 in. (203×254 mm), Letter, 16:9 (4×7.11 inches [102×181 mm])	20
Epson Premium Photo Paper Semi-gloss	4×6 in. (102×152 mm), Letter	20
Epson Ultra Premium Photo Paper Glossy	4×6 in. (102×152 mm), 5×7 in. (127×178 mm), 8×10 in. (203×254 mm), Letter	20

Genuine Epson Paper for Other Regions

Epson recommends using genuine Epson paper to ensure high-quality printouts.

Note:

- *The availability of paper varies by location. For the latest information on paper available in your area, contact Epson support.*
- *See the following for information on available paper types for borderless and 2-sided printing.*

"Paper for Borderless Printing" on page 225

"Paper for 2-Sided Printing" on page 226

Paper suitable for printing documents

Media Name	Size	Loading Capacity (Sheets)
Epson Business Paper	A4	100*1
Epson Bright White Ink Jet Paper	A4	80*2

*1 ADF is supported (loading capacity: 30 sheets).

*2 ADF is supported (loading capacity: 25 sheets).

Paper suitable for printing documents and photos

ADF is not supported.

Media Name	Size	Loading Capacity (Sheets)
Epson Photo Quality Ink Jet Paper	A4	80
Epson Double-sided Photo Quality Ink Jet Paper	A4	80
Epson Matte Paper-Heavyweight	A4	20
Epson Double-Sided Matte Paper	A4	1

Paper suitable for printing photos

ADF is not supported.

Media Name	Size	Loading Capacity (Sheets)
Epson Ultra Glossy Photo Paper	A4, 13x18 cm (5x7 in.), 10x15 cm (4x6 in.)	20*
Epson Premium Glossy Photo Paper	A4, 13x18 cm (5x7 in.), 16:9 wide size (102x181 mm), 10x15 cm (4x6 in.)	20*
Epson Premium Semigloss Photo Paper	A4, 13x18 cm (5x7 in.), 10x15 cm (4x6 in.)	20*
Epson Photo Paper Glossy	A4, 13x18 cm (5x7 in.), 10x15 cm (4x6 in.)	20*
Epson Value Glossy Photo Paper	A4, 10x15 cm (4x6 in.)	20*

* Load one sheet of paper at a time if the paper does not feed correctly or if the printout has uneven colors or smears.

Various other paper types

ADF is not supported.

Media Name	Size	Loading Capacity (Sheets)
Epson Photo Quality Ink Jet Card	A6	30
Epson Photo Quality Self Adhesive Sheets	A4	1

Commercially Available Paper for North America

Note:
See the following for information on available paper types for borderless and 2-sided printing.

"Paper for Borderless Printing" on page 225

"Paper for 2-Sided Printing" on page 226

Plain papers

Size	Loading Capacity (Sheets)
Letter, A4, B5, A5, A6, B6, 16K (195×270 mm), Half Letter, Executive	Up to the line indicated by the triangle symbol on the edge guide.*1*2
Legal, 8.5×13 in., Indian-Legal, 8.5×13 in. (215.9×330.2 mm)	1*3
User Defined*4 89×127 to 215.9×1200 mm	1

*1 Load one sheet of paper at a time if the paper does not feed correctly or if the printout has uneven colors or smears.

*2 Letter and A4 are supported for ADF (loading capacity: 30 sheets).

*3 ADF is supported (loading capacity: 10 sheets).

*4 Only printing from computer is available.

Commercially Available Paper for Other Regions

Note:
See the following for information on available paper types for borderless and 2-sided printing.

"Paper for Borderless Printing" on page 225

"Paper for 2-Sided Printing" on page 226

Plain papers

Plain paper includes copy paper.

Size	Loading Capacity (Sheets)
Letter, A4, B5, A5, A6, B6, 16K (195×270 mm)	Up to the line indicated by the triangle symbol on the edge guide.*1*2
Legal, 8.5×13 in., Indian-Legal	1*3
User Defined*4 89×127 to 215.9×1200 mm	1

*1 Load one sheet of paper at a time if the paper does not feed correctly or if the printout has uneven colors or smears.

*2 Letter and A4 are supported for ADF (loading capacity: 30 sheets).

*3 ADF is supported (loading capacity: 10 sheets).

*4 Only printing from computer is available.

Envelope

ADF is not supported.

: Direction of paper being fed.

Size	Loading Capacity (Envelopes)
Envelope #10, Envelope DL, Envelope C6	10

Paper for Borderless Printing

Genuine Epson Paper

for North America

Media Name	Size
Epson Value Photo Paper Glossy	4×6 in. (102×152 mm)
Epson Photo Paper Glossy	4×6 in. (102×152 mm)
Epson Premium Photo Paper Semi-gloss	4×6 in. (102×152 mm)
Epson Premium Photo Paper Glossy	4×6 in. (102×152 mm), 16:9 (4×7.11 in. [102×181 mm])

Media Name	Size
Epson Ultra Premium Photo Paper Glossy	4×6 in. (102×152 mm)

for Other Regions

Media Name	Size
Epson Ultra Glossy Photo Paper	10×15 cm (4×6 in.)
Epson Premium Glossy Photo Paper	10×15 cm (4×6 in.), 16:9 wide size (102×181 mm)
Epson Premium Semigloss Photo Paper	10×15 cm (4×6 in.)
Epson Photo Paper Glossy	10×15 cm (4×6 in.)
Epson Value Glossy Photo Paper	10×15 cm (4×6 in.)

Related Information

➡ "Available Paper and Capacities" on page 222

Commercially Available Paper

Borderless printing is not supported.

Related Information

➡ "Available Paper and Capacities" on page 222

Paper for 2-Sided Printing

Genuine Epson Paper

for North America

Manual 2-sided printing only.

❏ Epson Multipurpose Plus Paper

❏ Epson Bright White Premium Paper

❏ Epson Bright White Paper / Epson Bright White Pro Paper / Epson EcoTank Premium Paper

❏ Epson Premium Presentation Paper Matte Double-Sided

for Other Regions

Manual 2-sided printing only.

❏ Epson Bright White Ink Jet Paper

❏ Epson Double-sided Photo Quality Ink Jet Paper

❏ Epson Double-Sided Matte Paper

❏ Epson Business Paper

❏ Epson Photo Quality Ink Jet Card

Related Information

➡ "Available Paper and Capacities" on page 222

Commercially Available Paper

Manual 2-sided printing only.

❏ Plain paper, Copy paper

Related Information

➡ "Available Paper and Capacities" on page 222

Unavailable Paper Types

Do not use the following paper types. Using these types of paper can cause paper feed problems and smears on the printouts.

❏ Papers that are wavy

❏ Papers that are torn or cut

❏ Papers that are folded

❏ Papers that are damp

❏ Papers that are too thick or too thin

❏ Papers that have stickers

Do not use the following envelopes. Using these types of envelope causes paper jams and smears on the printout.

❏ Envelopes that are curled or folded

❏ Envelopes with adhesive surfaces on the flaps or window envelopes

❏ Envelopes that are too thin
They may curl during printing.

Consumable Products Information

Ink Bottle Codes

Note:
For ET-2900U only

Use only the Epson 560 ink provided to you as part of the ReadyPrint program.

Epson recommends the use of genuine Epson ink bottles.

The following are the codes for genuine Epson ink bottles.

Important:

- *Epson warranty does not cover damage caused by inks other than those specified, including any genuine Epson ink not designed for this printer or any third party ink.*
- *Other products not manufactured by Epson may cause damage that is not covered by Epson's warranties, and under certain circumstances, may cause erratic printer behavior.*

Note:

- *Ink bottle codes may vary by location. For the correct codes in your area, contact Epson support.*
- *Although the ink bottles may contain recycled materials, this does not affect printer function or performance.*
- *Specifications and appearance of the ink bottle are subject to change without prior notice for improvement.*

For the U.S. and Canada

Note:
Visit the following website for information on Epson's ink bottle yields.

https://epson.com/ink-yield-cartridge-info (U.S.)

https://epson.ca/ink-yield-cartridge-info (Canada)

Epson's warranties do not extend to any damage caused by the use of third-party ink or ink not designed for your printer.

The included initial ink bottles must be used for printer setup and are not for resale. The printer ships with full ink bottles and part of the ink from the first bottles is used to charge the print head. Yields vary considerably based on images printed, print settings, paper type, frequency of use and temperature.

Product	BK: Black	C: Cyan	M: Magenta	Y: Yellow
ET-4900/ET-4903	522120	522420	522320	522220
ET-2900/ET-2903				

For Europe, Middle East, Turkey, Africa, Central and West Asia

Product	BK: Black	C: Cyan	M: Magenta	Y: Yellow
ET-4900*	104	104	104	104
ET-2920/ET-2921/ ET-2925/ET-2926*				
ET-2920U*	122	122	122	122
L3360/L3366/L5360	103	103	103	103

* Only for Europe.

Note:
Visit the following website for information on Epson's ink bottle yields.

https://www.epson.eu/pageyield (Europe only)

https://www.epson.com/eme (Middle East, Turkey, Africa, Central and West Asia only)

For Australia and New Zealand

BK: Black	C: Cyan	M: Magenta	Y: Yellow
522	522	522	522

For Asian countries except for China

BK: Black	C: Cyan	M: Magenta	Y: Yellow
003	003	003	003

For China

Product	BK: Black	C: Cyan	M: Magenta	Y: Yellow
L5398	055	055	055	055
L3366/L3367/L3369	004	004	004	004

Maintenance Box Code

Note:
For ET-2900U only

Maintenance boxes are provided to you as part of the ReadyPrint program.

The maintenance box can be purchased and replaced by the user.

Epson recommends the use of a genuine Epson maintenance box.

The following is the code for the genuine Epson maintenance box.

For all countries except for India

C9398

For India

C9399

Software Information

This section introduces some of the applications available for your printer. For a list of supported software, see the following Epson website or launch Epson Software Updater for confirmation. You can download the latest applications.

https://www.epson.com

Related Information

➡ "Application for Updating Software and Firmware (Epson Software Updater)" on page 233

Application for Printing from a Computer (Windows Printer Driver)

The printer driver controls the printer based on the commands from an application. Selecting settings in the printer driver provides the best printing results. You can also check the status of the printer or keep it in top operating condition using the printer driver utility.

Note:
You can change the language of the printer driver. Select the language you want to use from the ***Language*** *setting on the* ***Maintenance*** *tab.*

Accessing the printer driver from applications

To select settings that apply only to the application you are using, access the driver from that application.

Select **Print** or **Print Setup** from the **File** menu. Select your printer, and then click **Preferences** or **Properties**.

Note:
Operations differ depending on the application. See the application's help for details.

Accessing the printer driver from the control panel

To select settings that apply to all of the applications, follow the steps below.

❏ Windows 11/Windows Server 2025

Click on the start button, and then select **Settings** > **Bluetooth & devices** > **Printers & scanners**. Click your printer, and then select **Printing preferences**.

❏ Windows 10/Windows Server 2022/Windows Server 2019/Windows Server 2016

Click on the start button, and then select **Windows System** > **Control Panel** > **View devices and printers** in **Hardware and Sound**. Right-click on your printer, or press and hold it and then select **Printing preferences**.

❏ Windows 8.1/Windows 8/Windows Server 2012 R2/Windows Server 2012

Select **Desktop** > **Settings** > **Control Panel** > **View devices and printers** in **Hardware and Sound**. Right-click on your printer, or press and hold it and then select **Printing preferences**.

❏ Windows 7/Windows Server 2008 R2

Click the start button, and select **Control Panel** > **View devices and printers** in **Hardware and Sound**. Right-click on your printer and select **Printing preferences**.

❏ Windows Server 2008

Click the start button, and select **Control Panel** > **Printers** in **Hardware and Sound**. Right-click on your printer and select **Printing preferences**.

Accessing the printer driver from the printer icon on the task bar

The printer icon on the desktop task bar is a shortcut icon allowing you to quickly access the printer driver.

If you click the printer icon and select **Printer Settings**, you can access the same printer settings window as the one displayed from the control panel. If you double-click this icon, you can check the status of the printer.

Note:
If the printer icon is not displayed on the task bar, access the printer driver window, click ***Monitoring Preferences*** *on the* ***Maintenance*** *tab, and then select* ***Register the shortcut icon to the taskbar****.*

Starting the utility

Access the printer driver window. Click the **Maintenance** tab.

Application for Printing from a Computer (Mac OS Printer Driver)

The printer driver controls the printer based on the commands from an application. Selecting settings in the printer driver provides the best printing results. You can also check the status of the printer or keep it in top operating condition using the printer driver utility.

Accessing the printer driver from applications

Click **Page Setup** or **Print** on the **File** menu of your application. If necessary, click **Show Details** (or ▼) to expand the print window.

Note:
*Depending on the application being used, **Page Setup** may not be displayed in the **File** menu, and the operations for displaying the print screen may differ. See the application's help for details.*

Starting the utility

Select **System Preferences** (or **System Settings**) from the Apple menu > **Printers & Scanners** (or **Print & Scan** or **Print & Fax**), and then select the printer. Click **Options & Supplies** > **Utility** > **Open Printer Utility**.

Application for Controlling the Scanner (Epson Scan 2)

Epson Scan 2 is a scanner driver that allows you to control the scanner. You can adjust the size, resolution, brightness, contrast, and quality of the scanned image. You can also start this application from a TWAIN-compliant scanning application. See the software help for details on using the features.

Starting on Windows

Note:
*For Windows Server operating systems, make sure the **Desktop Experience** feature is installed.*

- ❏ Windows 11
  Click the start button, and then select **All apps** > **EPSON** > **Epson Scan 2**.
- ❏ Windows 10/Windows Server 2022/Windows Server 2019/Windows Server 2016
  Click the start button, and then select **EPSON** > **Epson Scan 2**.
- ❏ Windows 8.1/Windows 8/Windows Server 2012 R2/Windows Server 2012
  Enter the application name in the search charm, and then select the displayed icon.
- ❏ Windows 7/Windows Server 2008 R2/Windows Server 2008
  Click the start button, and then select **All Programs** > **EPSON** > **Epson Scan 2**.

Starting on Mac OS

Select **Go** > **Applications** > **Epson Software** > **Epson Scan 2**.

Application for Configuring Fax Operations and Sending Faxes (FAX Utility)

FAX Utility is an application that allows you to configure various settings for sending and receiving faxes on a computer. You can create or edit the contacts list to be used when sending a fax, configure to save received faxes in PDF format on the computer. See the application's help for details.

Note:

- *Windows Server operating systems are not supported.*
- *Make sure you have installed the printer driver before installing FAX Utility.*
- *Make sure the FAX Utility has been installed. See "Starting on Windows" or "Starting on Mac OS" below to check if the application has been installed.*

Starting on Windows

- Windows 11

  Click the start button, and select **All Apps** > **Epson Software** > **FAX Utility**.
- Windows 10

  Click the start button, and select **Epson Software** > **FAX Utility**.
- Windows 8.1/Windows 8

  Enter the application name in the search charm, and then select the displayed icon.
- Windows 7

  Click the start button, and select **All Programs** (or **Programs**) > **Epson Software** > **FAX Utility**.

Starting on Mac OS

Select **System Preferences** (or **System Settings**) from the Apple menu > **Printers & Scanners** (or **Print & Scan**, **Print & Fax**), and then select the printer (FAX). Click **Options & Supplies** > **Utility** > **Open Printer Utility**.

Application for Sending Faxes (PC-FAX Driver)

PC-FAX driver is an application that allows you to send a document created on a separate application as a fax directly from the computer. PC-FAX driver is installed when you install FAX Utility. See the application's help for details.

Note:

- *Windows Server operating systems are not supported.*
- *Check if PC-FAX driver has been installed. See "Accessing from Windows" or "Accessing from Mac OS" below.*
- *The operation differs depending on the application you used to create the document. See the application's help for details.*

Accessing from Windows

In the application, select **Print** or **Print Setup** from the **File** menu. Select your printer (FAX), and then click **Preferences** or **Properties**.

Accessing from Mac OS

In the application, select **Print** from the **File** menu. Select your printer (FAX) as the **Printer** setting, and then select **Fax Settings** or **Recipient Settings** from the pop-up menu.

Application for Configuring Printer Operations (Web Config)

Web Config is an application that runs in a web browser, such as Microsoft Edge or Safari, on a computer or mobile device. You can confirm the printer status or change the network service and printer settings. To use Web Config, connect the printer and the computer or device to the same network.

The following browsers are supported. Use the latest version.

Microsoft Edge, Firefox, Chrome, Safari

Note:
You may be asked to enter the administrator password while using Web Config. See the related information below for more details.

Related Information

➡ "Default Value of the Administrator Password" on page 16

Running Web Config on a Web Browser

1. Check the printer's IP address.

   Select **More** > **Settings** > **Network Settings** > **Connection Check** from the control panel to start the connection check. Press the ⊡ button or the OK button to print the Network Connection Report. Check the printer's IP address on the printed network connection report.

2. Launch a Web browser from a computer or mobile device, and then enter the printer's IP address.

   Format:

   IPv4: http://the printer's IP address/

   IPv6: http://[the printer's IP address]/

   Examples:

   IPv4: http://192.168.100.201/

   IPv6: http://[2001:db8::1000:1]/

   Note:
   If you are using a mobile device, you can also run Web Config from the product information screen of the Epson Smart Panel app.

   Since the printer uses a self-signed certificate when accessing HTTPS, a warning is displayed on the browser when you start Web Config; this does not indicate a problem and can be safely ignored.

Application for Updating Software and Firmware (Epson Software Updater)

Epson Software Updater is an application that installs new software, and updates firmware over the Internet. If you want to check for update information regularly, you can set the interval for checking for updates in Epson Software Updater's Auto Update Settings.

Note:
Windows Server operating systems are not supported.

Starting on Windows

❏ Windows 11

Click the start button, and then select **All apps** > **EPSON Software** > **Epson Software Updater**.

❏ Windows 10

Click the start button, and then select **EPSON Software** > **Epson Software Updater**.

❏ Windows 8.1/Windows 8

Enter the application name in the search charm, and then select the displayed icon.

❏ Windows 7

Click the start button, and then select **All Programs** > **EPSON Software** > **Epson Software Updater**.

Note:
You can also start Epson Software Updater by clicking the printer icon on the task bar on the desktop, and then selecting ***Software Update****.*

Starting on Mac OS

Select **Go** > **Applications** > **Epson Software** > **Epson Software Updater**.

Related Information

➡ "Installing the Applications Separately" on page 124

Settings Menu List

Select **More** > **Settings** on the home screen of the printer to make various settings.

Feature names and setting menu items may change depending on the firmware version.

Printer Setup

More > Settings > Printer Setup

In this menu group, the following items are only for ET-4900 Series/L5390 Series.

❏ Sound

❏ Date/Time Settings

In this menu group, the following items are only for ET-2900 Series/ET-2920 Series/L3360 Series.

❏ Auto Power On

Paper Source Settings:

Paper Setting:

Select the paper size and paper type you loaded in the paper source.

A4/Letter Auto Switching:

Select **On** to feed paper from the paper source set as A4 size when there is no paper source set as Letter, or feed from the paper source set as Letter size when there is no paper source set as A4.

Error Notice:

Paper Size Notice:

Select **On** to display an error message when the selected paper size does not match the loaded paper.

Paper Type Notice:

Select **On** to display an error message when the selected paper type does not match the loaded paper.

Paper Setup Auto Display:

Select **On** to display the **Paper Setting** screen when loading paper in the paper source. If you disable this feature, you cannot print from an iPhone, iPad, or iPod touch using AirPrint.

Sound:

Mute:

Select **On** to mute sounds such as those emitted when pressing buttons on the control panel.

Normal Mode:

Select the volume for sounds such as those emitted when pressing buttons on the control panel.

Ring Tone:

Set the volume for the sound emitted when the printer receives a fax.

Receive Completion Notice:

Set the volume for the sound emitted when fax reception is complete.

Print Completion Notice:

Set the volume for the sound emitted when a received fax finishes printing.

Receiver:

Set the volume for the dial sound when the printer sends a fax.

Send Completion Notice:

Set the volume for the sound emitted when sending a fax is complete.

Button Press:

Select the volume for the sound emitted when pressing buttons on the control panel.

Error Tone:

Set the volume for the sound emitted when an error occurs.

ADF Document Set:

Set the volume for the sound emitted when originals are placed in the ADF.

Quiet Mode:

Select sound settings in Quiet Mode.

Ring Tone:

Set the volume for the sound emitted when the printer receives a fax.

Receive Completion Notice:

Set the volume for the sound emitted when fax reception is complete.

Print Completion Notice:

Set the volume for the sound emitted when a received fax finishes printing.

Receiver:

Set the volume for the dial sound when the printer sends a fax.

Send Completion Notice:

Set the volume for the sound emitted when sending a fax is complete.

Button Press:

Select the volume for the sound emitted when pressing buttons on the control panel.

Error Tone:

Set the volume for the sound emitted when an error occurs.

ADF Document Set:

Set the volume for the sound emitted when originals are placed in the ADF.

Quiet Mode:

Select **On** to reduce noise during printing depending on the selected paper type and print quality, but print speed may decrease.

Auto Power On:

Select **On** to turn on the printer automatically when it receives a print or scan job over a USB-connection or a network connection. If the output tray is stored, slide it out manually to start printing.

Enabling **Auto Power On** increases power consumption slightly in standby status when compared to turning the printer off completely. Also, it takes longer to turn off the power. Leave the power cord plugged in when using this feature. If you unplug the power cord, make sure the power light is turned off.

Use the **Power Off Timer** setting if you want the printer to automatically turn off when the print or scan job is finished and a set time period has passed with no operations performed. This is useful when printing from a remote location such as over the Internet.

Power Off Settings:

Your product may have this feature or the **Power Off Timer** feature depending on the location of purchase.

Power Off If Inactive:

Select this setting to turn the printer off automatically if it is not used for a specified period of time. You can adjust the time before power management is applied. Any increase will affect the product's energy efficiency. Please consider the environment before making any change.

Power Off If Disconnected:

Select this setting to turn the printer off after a specified period of time when all ports including the LINE port are disconnected. This feature may not be available depending on your region.

For users in Europe, see the following website for the specified period of time.

https://www.epson.eu/energy-consumption

For Middle East, Turkey, Africa, Central and West Asia users, see the following Website for details on power consumption.

https://www.epson.com/eme

Power Off Timer:

Your product may have this feature or the **Power Off Settings** feature depending on the location of purchase.

Select this setting to turn the printer off automatically when it is not used for a specified period of time. You can adjust the time before power management is applied. Any increase will affect the product's energy efficiency. Please consider the environment before making any change.

Date/Time Settings:

Date/Time:

Enter the current date and time.

Daylight Saving Time:

Select the summer time setting that applies to your area.

Time Difference:

Enter the time difference between your local time and UTC (Coordinated Universal Time).

Language:

Select the language used on the LCD screen.

Keyboard:

Change the layout of the keyboard on the LCD screen.

Sleep Timer:

Adjust the time period to enter a sleep mode (energy saving mode) when the printer has not performed any operations. The LCD screen turns black when the setting time passes.

PC Connection via USB:

Select **Enable** to allow a computer to access the printer when connected by USB. When **Disable** is selected, printing and scanning that is not sent over a network connection is restricted.

Related Information

➡ "Saving Power" on page 123

Network Settings

Select the menus on the control panel as described below.

More >**Settings** > **Network Settings**

Print Status Sheet:

Prints a network status sheet.

The information for Ethernet, Wi-Fi, Wi-Fi Direct, and other network parameters is printed on two or more pages.

Connection Settings:

Connect the printer to the network over a wireless LAN. Select your connection method and follow the on-screen instructions.

Wi-Fi:

Wi-Fi Setup Wizard:

Configures Wi-Fi settings by having you enter the SSID and password.

Push Button Setup (WPS):

Makes Wi-Fi settings by Push Button Setup (WPS).

Others:

PIN Code (WPS):

Configures Wi-Fi settings via PIN Code (WPS).

Disable Wi-Fi:

Disconnects the connection to the Wi-Fi router.

Wi-Fi Direct:

Modify:

Change Network Name:

Changes the Wi-Fi Direct SSID (network name).

Change Password:

Changes the password for the Wi-Fi Direct connection.

Disable Wi-Fi Direct:

Disables the Wi-Fi Direct function.

Restore Default Settings:

Resets the Wi-Fi Direct settings.

Other Methods:

iOS:

Displays a QR code to connect a mobile device using Wi-Fi Direct.

Android:

Displays a QR code to connect a mobile device using Wi-Fi Direct.

Other OS Devices:

Displays the SSID and password to connect using Wi-Fi Direct.

Easy Connect with App:

Establish a wireless LAN connection using the wireless LAN information for your computer or mobile device.

Connection Check:

Checks the current network connection and prints a report. If there are any problems with the connection, see the report for solutions.

Related Information

➡ "Configuring Wi-Fi Settings from the Control Panel" on page 129
➡ "Connecting a Device and Printer Directly (Wi-Fi Direct)" on page 139

Epson Connect Services

Select the menus on the control panel as described below.

More >**Settings** > **Epson Connect Services**

Register/Delete:

Register or delete the printer to or from the Epson Connect services.

For usage guides, see the following portal website.

https://epson.com/connect (U.S.)

https://epson.ca/connect (Canada)

https://latin.epson.com/connect (Latin America)

http://www.epsonconnect.eu (Europe only)

https://www.epsonconnect.ae (Middle East, Türkiye, Africa, Central and West Asia only)

https://www.epsonconnect.com/ (Other regions)

Suspend/Resume:

Select to suspend or resume Epson Connect services.

Email Address:

Check the printer's email address that is registered to the Epson Connect services.

Status:

Check whether or not the printer is registered and connected to the Epson Connect services.

Contacts Manager

Select the menus on the control panel as described below.

More >**Settings** > **Contacts Manager**

This menu item is only available for ET-4900 Series/L5390 Series.

Add Entry:

Register an entry to be used for faxes in contacts.

Add Group:

Register an entry for group faxes in contacts.

Edit:

Edit entries and groups registered in contacts.

Delete:

Delete an entry or group registered in contacts.

Print Contacts:

Print your contacts list.

Fax Settings

The faxing feature is available only for ET-4900 Series/L5390 Series.

Check Fax Connection

You can find the menu on the printer's control panel below:

More > **Settings** > **Fax Settings** > **Check Fax Connection**

Selecting **Check Fax Connection** checks that the printer is connected to the phone line and ready for fax transmission. You can print the check result on Letter or A4 size plain paper.

Fax Setting Wizard

You can find the menu on the printer's control panel below:

More > **Settings** > **Fax Settings** > **Fax Setting Wizard**

Fax Setting Wizard allows you to select basic fax settings. Follow the on-screen instructions.

Related Information

➡ "Basic Settings Menu" on page 241
➡ "Preparing the Printer to Send and Receive Faxes" on page 82

Basic Settings Menu

You can find the menu on the printer's control panel below:

More > **Settings** > **Fax Settings** > **Basic Settings**

Fax Speed:

Select the fax transmission speed. We recommend selecting **Slow(9,600bps)** when a communication error occurs frequently, when sending/receiving a fax to/from abroad, or when you are using an IP (VoIP) phone service.

ECM:

Automatically corrects errors in the fax transmission (Error Correction Mode), mostly caused by telephone line noise. If this is disabled, you cannot send or receive documents in color.

Dial Tone Detection:

Detects a dial tone before starting to dial. If the printer is connected to a PBX (Private Branch Exchange) or digital phone line, the printer may fail to start dialing. In this situation, change the **Line Type** setting to **PBX**. If this does not work, disable this feature. However, disabling this feature may drop the first digit of a fax number and send the fax to the wrong number.

Dial Mode:

Select the type of phone system to which you have connected the printer. When set to **Pulse**, you can temporarily switch the dialing mode from pulse to tone by pressing * ("T" is displayed) while entering numbers on the control panel. This setting may not be displayed depending on your region or country.

Line Type:

Select the line type to which you have connected the printer.

PSTN:

Select **PSTN** when the printer is connected to a public switched telephone network.

PBX:

Select **PBX** when using the printer in an environment that uses extensions and requires an external access code, such as 0 and 9, to get an outside line. For an environment that uses a DSL modem or terminal adapter, selecting **PBX** is also recommended.

Access Code:

Select **Use**, and then register an external access code such as 0 or 9. Then, when sending a fax to an outside fax number, enter # (hash) instead of the real code. When registering in **Contacts**, add a # (hash) instead of [0] or [9] to register the destination.

"Connecting to a Standard Phone Line (PSTN) or PBX" on page 80

Header:

Enter your sender name and fax number. These appear as a header on outgoing faxes.

Your Phone Number:

You can enter up to 20 characters using 0-9, +, or space.

Fax Header:

You can register up to 21 sender names as necessary. You can enter up to 40 characters for each sender name.

Receive Mode:

Select the receive mode.

"Receiving Incoming Faxes" on page 97

DRD:

If you have subscribed to a distinctive ring service from your telephone company, select the ring pattern to be used for incoming faxes. The distinctive ring service, offered by many telephone companies (the service name differs by company), allows you to have several phone numbers on one phone line. Each number is assigned different ring pattern. You can use one number for voice calls and another for fax calls. Depending on the region, this option may be **On** or **Off**.

Rings to Answer:

Select the number of rings that must occur before the printer automatically receives a fax.

Remote Receive:

When you answer an incoming fax call on a phone connected to the printer, you can start receiving the fax by entering the code using the phone.

Rejection Fax:

Rejection Fax:

Select options to reject receiving junk faxes.

Rejection Number List:

If the other party's phone number is in the rejection number list, set whether to reject the receiving faxes.

Fax Header Blank:

Rejects faxes that have blank header information.

Caller not in Contacts:

If the other party's phone number is not in the contacts, set whether to reject receiving the faxes.

Edit Blocked Number list:

You can register up to 30 fax numbers to reject the faxes and calls. Enter up to 20 characters using 0-9, *, #, or space.

Related Information

➡ "Preparing the Printer to Send and Receive Faxes" on page 82
➡ "Selecting Settings for a PBX Phone System" on page 84
➡ "Receiving Incoming Faxes" on page 97
➡ "Selecting Settings for Blocking Junk Faxes" on page 86

Receive Settings Menu

You can find the menu on the printer's control panel below:

More > **Settings** > **Fax Settings** > **Receive Settings**

Save to Computer:

Saves received faxes as PDF files on a computer connected to the printer. You can only set this to **Yes** by using the FAX Utility (application). You cannot enable this from printer's control panel. Install the FAX Utility on the computer in advance. After changing change this setting **Yes**, you can select **Yes and Print** from the printer's control panel.

Auto Reduction:

Prints received large-size faxes at a reduced size so they fit on the paper in the paper source. Reducing may not always be possible depending on the received data. If this is turned off, large documents are printed at their original size on multiple sheets, or a blank second page may be ejected.

Split Page Settings:

Prints received faxes with the page split when their size is larger than the size of the paper loaded in the printer. If the amount that exceeds the paper length is less than the value set in **Delete Print Data After Split** > **Threshold**, the excess is discarded. If the amount that exceeds the paper length is over the set value, the excess is printed on another sheet.

Delete Print Data After Split:

Select the area of the document to delete when the amount that exceeds the paper length is less than the value set in **Threshold**.

Threshold

If the amount that exceeds the paper length is less than or equal to this value, the excess is discarded and is not printed.

Overlap When Split:

When this is set to **On** and the data is divided and printed because the amount exceeds the **Delete Print Data After Split** > **Threshold**, the divided data is printed using the overlapping width specified in **Overlapping Width**.

Overlapping Width

Data that exceeds this value is printed over.

Auto Rotation:

Rotates faxes received as landscape-oriented A5 size documents so that they are printed on A5 size paper. This setting is applied when the paper size setting for at least one paper source used for printing faxes is set to A5.

By selecting **Off**, faxes received as landscape-oriented A5 size, which are the same width as A4 portrait documents, are assumed to be A4 size faxes and printed as such.

Check the paper size setting in **More** > **Settings** > **Printer Setup** > **Paper Source Settings**.

Add Reception Information:

Prints reception information on the received fax, even if the sender does not set the header information. The reception information includes the received date and time, sender's ID, and page number (such as "P1"). When **Split Page Settings** is enabled, the split page number is also included.

Print Start Timing:

Select options to start printing received faxes.

- All Pages Received: Printing starts after receiving all of the pages. Printing starts from the first or last page depending on the **Collation Stack** setting. See the explanation for **Collation Stack**.
- First Page Received: Starts printing when the first page is received, and then prints the pages in order as they are received. If the printer cannot start printing, such as when it is printing other jobs, the printer starts printing received pages as a batch when it is available.

Collation Stack:

When this setting is enabled, the pages are printed in reverse order so that the printed documents are stacked in the correct order. When the printer is running low on memory, this feature may not be available.

Print Suspend Time:

During the time period you specify from **Stop** through **Restart**, the printer saves documents received in the printer's memory without printing them. This feature can be used for noise prevention at night or to prevent confidential documents from being disclosed while you are away. Before using this feature, make sure there is enough free memory. When you set this to **Off**, you can print the received documents even before the restart time.

Quiet Mode:

Reduces the noise the printer makes when printing faxes, print speed may be reduced.

Report Settings Menu

You can find the menu on the printer's control panel below:

More > **Settings** > **Fax Settings** > **Report Settings**

Fax Log Auto Print:

Prints the fax log automatically. Select **On(Every 30)** to print a log every time 30 fax jobs are completed. Select **On(Time)** to print the log at a specified time. However, if the number of fax jobs exceeds 30, the log is printed before the specified time.

Attach Fax image to report:

Prints a **Transmission Report** with an image of the first page of the sent document. Select **On(Large Image)** to print the upper part of the page without reducing. Select **On(Small Image)** to print the entire page reducing it to fit onto the report.

Report Format:

Selects a format for fax reports in **Fax** > **Menu** > **More** > **Fax Report** other than **Protocol Trace**. Select **Detail** to print with error codes.

Security Settings Menu

You can find the menu on the printer's control panel below:

More > **Settings** > **Fax Settings** > **Security Settings**

Direct Dialing Restrictions:

Selecting **On** disables manual entry of the recipient's fax numbers, so that the operator can only select recipients from the contacts list or sent history.

Selecting **Enter Twice** requires the operator to enter the fax number again if the number is manually entered.

Selecting **Off** enables manual entry of the recipient's fax numbers.

Broadcasting Restrictions:

Selecting **On** allows only one fax number to be entered as the Recipient.

Confirm Address List:

Displays a recipient confirmation screen before starting the transmission.

You can select the recipients from **All** or **Only for Broadcasting**.

Backup Data Auto Clear:

Backup copies of sent and received documents are usually temporarily stored in the printer's memory in case of an unexpected power failure or incorrect operations.

Selecting **On** automatically erases the backups when sending or receiving a document completes successfully and the backups become unnecessary.

Clear Backup Data:

Erases all backup copies temporarily stored in the printer's memory. Run this before you give the printer to someone else or dispose of it.

Country/Region:

Select the country or region in which you are using your printer. If you change the country or region, your fax settings return to their defaults and you must select them again.

User Default Settings Menu

You can find the menu on the printer's control panel below:

More > **Settings** > **Fax Settings** > **User Default Settings**

The settings made in this menu become your default settings for in the **Fax** > **Menu**. For details, see the related information below.

Related Information

➡ "Scan Settings:" on page 99
➡ "Fax Send Settings:" on page 99

Print Status Sheet

Select the menus on the control panel as described below.

More > **Settings** > **Print Status Sheet**

Configuration Status Sheet:

Print information sheets showing the current printer status and settings.

Supply Status Sheet:

Print information sheets showing the status of consumables.

Usage History Sheet:

Print information sheets showing the usage history of the printer.

Print Counter

Select the menus on the control panel as described below.

More > **Settings** > **Print Counter**

Displays the total number of prints, B&W prints, and color prints including items such as the status sheet from the time you purchased the printer. If you select **Print Sheet**, the Usage History Sheet is printed.

You can also check the number of pages printed from other functions on the Usage History Sheet.

Customer Research

Select the menus on the control panel as described below.

More > **Settings** > **Customer Research**

If you agree to provide customer usage information, product usage information such as the number of prints will be provided to Seiko Epson Corporation. The information collected is used to improve our products and services.

Previous Settings :

Displays the approval status.

Restore Default Settings

Select the menus on the control panel as described below.

More > **Settings** > **Restore Default Settings**

Network Settings:

Resets the network settings to their defaults.

Copy Settings:

Resets the copy settings to their defaults.

Scan Settings:

Resets the scan settings to their defaults.

Fax Settings:

Resets the fax settings to their defaults.

This menu item is only available for ET-4900 Series/L5390 Series.

Clear All Data and Settings:

Clears all the personal information stored in the printer's memory and resets all settings to their defaults.

Firmware Update

Select the menus on the control panel as described below.

More > **Settings** > **Firmware Update**

Update:

Check if a later version of the firmware has been uploaded to the network server. If an update is available, you can select whether or not to start updating.

Current Version:

Displays the current firmware version of your printer.

Notification:

Select **On** to receive a notification if a firmware update is available.

Product Specifications

Printer Specifications

Print Head Nozzle Placement		Black ink nozzles: 180×1 rows Color ink nozzles: 59×3 rows for each color
Weight of Paper*	Plain Paper	0.08 to 0.11 mm (64 to 90 g/m^2)
	Envelopes	75 to 100 g/m^2

* Even when the paper thickness is within this range, the paper may not feed in the printer or the print quality may decline depending on the paper properties or quality.

Printable Area

Printable Area for Single Sheets

Print quality may decline in the darker shaded areas due to the printer's mechanism.

Printing with borders

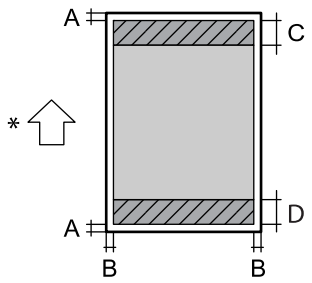

A	3.0 mm (0.12 in.)
B	3.0 mm (0.12 in.)
C	41.0 mm (1.61 in.)
D	37.0 mm (1.46 in.)

*Direction of paper being fed.

Borderless printing

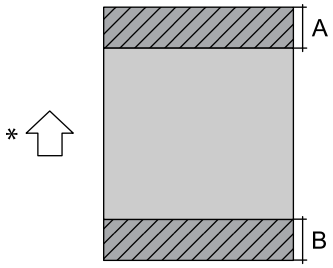

A	44.0 mm (1.73 in.)
B	40.0 mm (1.57 in.)

*Paper feed direction.

Printable Area for Envelopes

Print quality may decline in the shaded areas due to the printer's mechanism.

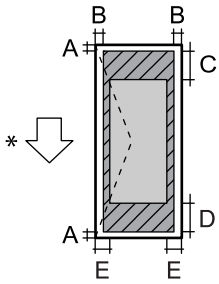

A	3.0 mm (0.12 in.)
B	3.0 mm (0.12 in.)
C	18.0 mm (0.71 in.)
D	41.0 mm (1.61 in.)
E	5.0 mm (0.20 in.)

*Direction of paper being fed.

Scanner Specifications

Scanner Type	Flatbed
Photoelectric Device	CIS
Maximum Document Size	216×297 mm (8.5×11.7 in.) A4, Letter
Resolution	1200 dpi
Color Depth	Color ❏ 48 bits per pixel internal (16 bits per pixel per color internal) ❏ 24 bits per pixel external (8 bits per pixel per color external) Grayscale ❏ 16 bits per pixel internal ❏ 8 bits per pixel external
Light Source	LED

ADF Specifications

ET-4900 Series/L5390 Series Only

Available Paper Sizes	A4, Letter, 8.5×13 in., Legal, Indian-Legal
Paper Type	Plain Paper
Weight of Paper	64 to 95 g/m^2
Loading Capacity	A4, Letter: 30 sheets or 3.3 mm (0.13 in.) 8.5×13 in., Legal, Indian-Legal: 10 sheets
Auto duplex scanning	Not supported

Even when the original meets the specifications for media that can be placed in the ADF, it may not feed from the ADF or the scan quality may decline depending on the paper properties or quality.

Fax Specifications

ET-4900 Series/L5390 Series Only

Fax Type	Walk-up black and white and color fax capability (ITU-T Super Group 3)
Supported Lines	Standard analogue telephone lines, PBX (Private Branch Exchange) telephone systems
Speed	Up to 33.6 kbps

Resolution	Monochrome ❏ Standard: 8 pel/mm×3.85 line/mm (203 pel/in.×98 line/in.) ❏ Fine: 8 pel/mm×7.7 line/mm (203 pel/in.×196 line/in.) ❏ Photo: 8 pel/mm×7.7 line/mm (203 pel/in.×196 line/in.) Color 200×200 dpi
Page Memory	Up to 100 pages (when received ITU-T No.1 chart in monochrome draft mode)
Redial*	2 times (with 1 minute intervals)
Interface	RJ-11 Phone Line, RJ-11 Telephone set connection

* The specifications may differ by country or region.

Interface Specifications

For Computer	Hi-Speed USB*

* USB 3.0 cables are not supported.

Network Specifications

Wi-Fi Specifications

Standards	IEEE802.11b/g/n*1/k/v/r
Frequency Range	2.4 GHz
Connection Modes	Infrastructure, Wi-Fi Direct (Simple AP)*2*3
Wireless Securities*4	WEP (64/128bit), WPA2-PSK (AES)*5, WPA3-SAE (AES)

*1 IEEE802.11n is only available for the HT20.

*2 Not supported for IEEE 802.11b.

*3 Simple AP mode is compatible with a Wi-Fi connection (infrastructure) or an Ethernet connection.

*4 Wi-Fi Direct supports WPA2-PSK (AES) only.

*5 Complies with WPA2 standards with support for WPA/WPA2 Personal.

Ethernet Specifications

ET-4900 Series/L5390 Series Only

Standards	IEEE802.3i (10BASE-T)*1 IEEE802.3u (100BASE-TX) IEEE802.3az (Energy Efficient Ethernet)*2*3
Communication Mode	Auto, 10Mbps Full duplex, 10Mbps Half duplex, 100Mbps Full duplex, 100Mbps Half duplex
Connector	RJ-45

*1 Use a category 5e or higher STP (Shielded twisted pair) cable to prevent risk of radio interference.

*2 The connected device should comply with IEEE802.3az standards.

*3 IEEE802.3az is disabled by default. See "Related Information" to enable this setting.

Related Information

➡ "Enabling Energy Efficient Ethernet" on page 145

Network Functions and IPv4/IPv6

Functions			Supported	Remarks
Network Printing	EpsonNet Print (Windows)	IPv4	✓	-
	Standard TCP/IP (Windows)	IPv4, IPv6	✓	-
	WSD Printing (Windows)	IPv4, IPv6	✓	-
	Bonjour Printing (Mac OS)	IPv4, IPv6	✓	-
	IPP Printing (Windows, Mac OS)	IPv4, IPv6	✓	-
	Epson Connect (Email Print, Remote Print)	IPv4	✓	-
	AirPrint (iOS, Mac OS)	IPv4, IPv6	✓	iOS 5 or later, OS X Mavericks (10.9.5) or later*
	Mopria Print	IPv4, IPv6	✓	-
	Chromebook Print (ChromeOS)	IPv4, IPv6	✓	-
	Microsoft IPP Class Driver (Windows)	IPv4, IPv6	✓	-

Functions			Supported	Remarks
Network Scanning	Epson Scan 2	IPv4, IPv6	✓	-
	Epson ScanSmart	IPv4	✓	Windows 7 or later, or OS X El Capitan (10.11) or later
	Epson Event Manager (Mac OS)	IPv4	✓	OS X Yosemite (10.10)/OS X Mavericks (10.9.5)
	Epson Connect (Scan to Cloud)	IPv4	-	-
	AirPrint (Scan)	IPv4, IPv6	✓	OS X Mavericks (10.9.5) or later*
	Mopria Scan	IPv4, IPv6	✓	-
	Chromebook Scan (ChromeOS)	IPv4, IPv6	✓	-
Fax	Send a fax	IPv4	✓	-
	Receive a fax	IPv4	✓	-
	AirPrint (Faxout)	IPv4, IPv6	✓	OS X Mavericks (10.9.5) or later*

* We recommend using the latest version of iOS or Mac OS.

Security Protocol

SSL/TLS	HTTPS Server/Client, IPPS
TLS Version	1.3, 1.2, 1.1*, 1.0*
SNMPv3	

* Disabled by default.

Supported Third Party Services

Services		Supported	Remarks
AirPrint	Print	✓	iOS 5 or later/OS X Mavericks (10.9.5) or later*1
	Scan	✓	OS X Mavericks (10.9.5) or later*1
	Fax	✓	OS X Mavericks (10.9.5) or later*1

Services		Supported	Remarks
Mopria	Print	✓	Android 8.0 or later, Windows 10 or later*2
	Scan	✓	Android 12.0 or later, Windows 10 or later*2, ChromeOS 89 or later*3
Chromebook	Print	✓	ChromeOS 89 or later*3
	Scan	✓	ChromeOS 89 or later*3

*1 We recommend using the latest version of iOS or Mac OS.

*2 We recommend using the latest version of Windows.

*3 We recommend using the latest version of ChromeOS.

Dimensions

ET-4900 Series/L5390 Series

Dimensions	Storage ❏ Width: 375 mm (14.8 in.) ❏ Depth: 317 mm (12.5 in.) ❏ Height: 224 mm (8.8 in.) Printing ❏ Width: 375 mm (14.8 in.) ❏ Depth: 564 mm (22.2 in.) ❏ Height: 251 mm (9.9 in.)
Weight*	Approx. 5.5 kg (12.1 lb)

* Without the ink and the power cord.

ET-2900 Series/ET-2920 Series/L3360 Series

Dimensions	Storage ❏ Width: 361 mm (14.2 in.) ❏ Depth: 317 mm (12.5 in.) ❏ Height: 162 mm (6.4 in.) Printing ❏ Width: 361 mm (14.2 in.) ❏ Depth: 564 mm (22.2 in.) ❏ Height: 206 mm (8.1 in.)
Weight*	Approx. 4.2 kg (9.3 lb)

* Without the ink and the power cord.

Electrical Specifications

ET-4900 Series/L5390 Series

Power Supply Rating	AC 100-240 V	AC 220-240 V
Rated Frequency Range	50-60 Hz	50-60 Hz
Rated Current	0.4-0.2 A	0.2 A
Power Consumption (with USB Connection)	Standalone copying: Approx. 12.0 W (ISO/IEC24712) Ready mode: Approx. 6.0 W Sleep mode: Approx. 0.5 W* Power off: Approx. 0.1 W	Standalone copying: Approx. 12.0 W (ISO/IEC24712) Ready mode: Approx. 6.0 W Sleep mode: Approx. 0.5 W* Power off: Approx. 0.1 W

* This is a reference value. Actual power consumption may vary depending on your environment.

Note:

- *Check the label on the printer for its voltage.*
- *For European users, see the following Website for details on power consumption.*

  https://www.epson.eu/energy-consumption
- *For Middle East, Turkey, Africa, Central and West Asia users, see the following Website for details on power consumption.*

  https://www.epson.com/eme

ET-2900 Series/ET-2920 Series/L3360 Series

Power Supply Rating	AC 100-240 V	AC 220-240 V
Rated Frequency Range	50-60 Hz	50-60 Hz
Rated Current	0.4-0.2 A	0.2 A
Power Consumption (with USB Connection)	Standalone copying: Approx. 12.0 W (ISO/IEC24712) Ready mode: Approx. 6.0 W Sleep mode: Approx. 0.5 W* Power off: Approx. 0.1 W	Standalone copying: Approx. 12.0 W (ISO/IEC24712) Ready mode: Approx. 6.0 W Sleep mode: Approx. 0.5 W* Power off: Approx. 0.1 W

* This is a reference value. Actual power consumption may vary depending on your environment.

Note:

- *Check the label on the printer for its voltage.*
- *For European users, see the following Website for details on power consumption.*

  https://www.epson.eu/energy-consumption
- *For Middle East, Turkey, Africa, Central and West Asia users, see the following Website for details on power consumption.*

  https://www.epson.com/eme

Environmental Specifications

Operation	Use the printer within the temperature (°C) and humidity (%) ranges shown in the graph, and in an environment without condensation. 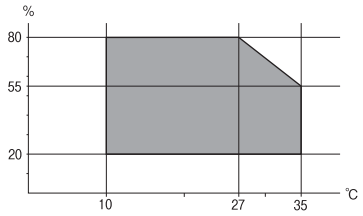
Storage	Temperature: -20 to 40°C (-4 to 104°F)* Humidity: 5 to 85% RH (without condensation)

* You can store the printer for one month at 40°C (104°F).

Environmental Specifications for Ink Bottles

Storage Temperature	-20 to 40 °C (-4 to 104 °F)*
Freezing Temperature	-15 °C (5 °F) Ink thaws and is usable after approximately 2 hours at 25 °C (77 °F).

* You can store ink bottles for one month at 40 °C (104 °F).

Note:

Epson's warranties do not extend to any damage caused by the use of third-party ink or ink not designed for your printer.

The included initial ink bottles must be used for printer setup and are not for resale. The printer ships with full ink bottles and part of the ink from the first bottles is used to charge the print head. Yields vary considerably based on images printed, print settings, paper type, frequency of use and temperature.

System Requirements

- Windows

  Windows 7, Windows 8/8.1, Windows 10, Windows 11 or later

  Windows Server 2008 or later

❏ Mac OS

Mac OS X 10.9.5 or later, macOS 11 or later

❏ ChromeOS

Note:
Only supports the standard OS features.

Regulatory Information

Standards and Approvals

Standards and Approvals for the U.S. and Canadian Models

Safety	UL62368-1 CSA C22.2 NO. 62368-1:19
EMC	FCC Part 15 Subpart B Class B CAN ICES (B)/NMB (B)

This equipment contains the following wireless module.

Manufacturer: Seiko Epson Corporation

Type: J26H006

This product conforms to Part 15 of FCC Rules and RSS-210 of the IC Rules. Epson cannot accept responsibility for any failure to satisfy the protection requirements resulting from a non-recommended modification of the product. Operation is subject to the following two conditions: (1) this device may not cause harmful interference, and (2) this device must accept any interference received, including interference that may cause undesired operation of the device.

To prevent radio interference to the licensed service, this device is intended to be operated indoors and away from windows to provide maximum shielding. Equipment (or its transmit antenna) that is installed outdoors is subject to licensing.

This equipment complies with FCC/IC radiation exposure limits set forth for an uncontrolled environment and meets the FCC radio frequency (RF) Exposure Guidelines in Supplement C to OET65 and RSS-102 of the IC radio frequency (RF) Exposure rules. This equipment should be installed and operated so that the radiator is kept at least 7.9 inches (20 cm) or more away from a person's body (excluding extremities: hands, wrists, feet and ankles).

FCC Compliance Statement

For United States Users

This equipment complies with Part 68 of the FCC rules and the requirements adopted by the Administrative Council for Terminal Attachments ("ACTA"). On the surface of this equipment is a label that contains, among other information, a product identifier in the format US:AAAEQ##TXXXX. If requested, this number must be provided to the telephone company.

Applicable certification jack Universal Service Order Codes ("USOC") for the equipment: RJ11C.

A plug and jack used to connect this equipment to the premises wiring and telephone network must comply with the applicable FCC Part 68 rules and requirements adopted by the ACTA. A compliant telephone cord and modular plug is provided with this product. It is designed to be connected to a compatible modular jack that is also compliant. See installation instructions for details.

The REN is used to determine the number of devices that may be connected to a telephone line. Excessive RENs on a telephone line may result in the devices not ringing in response to an incoming call. In most but not all areas, the sum of RENs should not exceed five (5.0). To be certain of the number of devices that may be connected to a line, as determined by the total RENs, contact the local telephone company. For products approved after July 23, 2001, the REN for this product is part of the product identifier that has the format US:AAAEQ##TXXXX. The digits represented by ## are the REN without a decimal point (e.g., 03 is a REN of 0.3). For earlier products, the REN is separately shown on the label.

If this equipment causes harm to the telephone network, the telephone company will notify you in advance that temporary discontinuance of service may be required. But if advance notice isn't practical, the telephone company will notify the customer as soon as possible. Also, you will be advised of your right to file a complaint with the FCC if you believe it is necessary.

The telephone company may make changes in its facilities, equipment, operations, or procedures that could affect the operation of the equipment. If this happens the telephone company will provide advance notice in order for you to make necessary modifications to maintain uninterrupted service.

If you have problems with this product and require technical or customer support, please visit www.epson.com for more information.

This product is not intended to be repaired by the customer. If you experience trouble connecting this equipment to a telephone line, please contact:

Name: Epson America, Inc.

Address: 3131 Katella Ave., Los Alamitos, CA 90720 U.S.A.

Telephone: (562) 981-3840

If the equipment is causing harm to the telephone network, the telephone company may request that you disconnect the equipment until the problem is resolved.

This equipment may not be used on coin service provided by the telephone company. Connection to party line service is subject to state tariffs. Contact the state public utility commission, public service commission or corporation commission for information.

If your home has specially wired alarm equipment connected to the telephone line, ensure the installation of this equipment does not disable your alarm equipment. If you have questions about what will disable alarm equipment, consult your telephone company or a qualified installer.

The Telephone Consumer Protection Act of 1991 makes it unlawful for any person to use a computer or other electronic device, including fax machines, to send any message unless such message clearly contains in a margin at the top or bottom of each transmitted page or on the first page of the transmission, the date and time it is sent and an identification of the business or other entity, or other individual sending the message and the telephone number of the sending machine or such business, other entity, or individual. (The telephone number provided may not be a 900 number or any other number for which charges exceed local or long-distance transmission charges.)

To comply with this law, you must enter the following information in your fax unit. Click the link below or see the Faxing section of this guide for instructions on doing this.

- ❏ Date and time
- ❏ Name and telephone number which identify the source of your fax transmission

According to the FCC's electrical safety advisory, we recommend that you may install an AC surge arrester in the AC outlet to which this equipment is connected. Telephone companies report that electrical surges, typically lightning transients, are very destructive to customer terminal equipment connected to AC power sources and that this is a major nationwide problem.

This equipment has been tested and found to comply with the limits for a Class B digital device, pursuant to Part 15 of the FCC Rules. These limits are designed to provide reasonable protection against harmful interference in a residential installation. This equipment generates, uses, and can radiate radio frequency energy and, if not installed and used in accordance with the instructions, may cause harmful interference to radio communications. However, there is no guarantee that interference will not occur in a particular installation. If this equipment does cause harmful interference to radio or television reception, which can be determined by turning the equipment off and on, the user is encouraged to try to correct the interference by one or more of the following measures:

- ❏ Reorient or relocate the receiving antenna.
- ❏ Increase the separation between the equipment and receiver.
- ❏ Connect the equipment into an outlet on a circuit different from that to which the receiver is connected.
- ❏ Consult the dealer or an experienced radio/TV technician for help.

WARNING

The connection of a non-shielded equipment interface cable to this equipment will invalidate the FCC Certification or Declaration of this device and may cause interference levels which exceed the limits established by the FCC for this equipment. It is the responsibility of the user to obtain and use a shielded equipment interface cable with this device. If this equipment has more than one interface connector, do not leave cables connected to unused interfaces. Changes or modifications not expressly approved by the party responsible for compliance could void the user's authority to operate this equipment.

For Canadian Users

- ❏ This product meets the applicable Innovation, Science and Economic Development Canada technical specifications.
- ❏ The Ringer Equivalence Number indicates the maximum number of devices allowed to be connected to a telephone interface. The termination of an interface may consist of any combination of devices subject only to the requirement that the sum of the RENs of all the devices does not exceed five.

CAN ICES (B)/NMB (B)

Standards and Approvals for European Models

The following models are CE/UKCA marked and in compliance with the relevant statutory requirements.

The full text of the declaration of conformity is available at the following website:

https://www.epson.eu/conformity

C851A, C861A

This product meets international guidelines (ICNIRP) for exposure to radio frequency radiation.

If it incorporates a radio transmitting and receiving device that in normal use, a separation distance of 20 cm ensures that radio frequency exposure levels comply with EU requirements.

Standards and Approvals for Australian Model

EMC	AS/NZS CISPR32 Class B

Epson hereby declares that the following equipment Models are in compliance with the essential requirements and other relevant provisions of AS/NZS4268:

C851A, C861A

Epson cannot accept responsibility for any failure to satisfy the protection requirements resulting from a non-recommended modification of the product.

Standards and Approvals for New Zealand Model

General Warning

The grant of a Telepermit for any item of terminal equipment indicates only that Telecom has accepted that the item complies with minimum conditions for connection to its network. It indicates no endorsement of the product by Telecom, nor does it provide any sort of warranty. Above all, it provides no assurance that any item will work correctly in all respects with another item of Telepermitted equipment of a different make or model, nor does it imply that any product is compatible with all of Telecom's network services.

Telepermitted equipment only may be connected to the EXT telephone port. This port is not specifically designed for 3-wire-connected equipment. 3-wire-connected equipment might not respond to incoming ringing when attached to this port.

Important Notice

Under power failure conditions, this telephone may not operate. Please ensure that a separate telephone, not dependent on local power, is available for emergency use.

This equipment is not capable, under all operating conditions, of correct operation at the higher speeds for which it is designed. Telecom will accept no responsibility should difficulties arise in such circumstances.

This equipment shall not be set up to make automatic calls to the Telecom '111' Emergency Service.

ZICTA Type Approval for Users in Zambia

See the following website to check the information for ZICTA Type Approval.

https://support.epson.net/zicta/

Standards and Approvals for Mongolian Model

This product contains the following approved parts, which are certified by the Communications Regulatory Commission of Mongolia.

11n+BT combo module: J26H006 (certificate No. A23001080)

Facsimile kit: EU-236W (certificate No. A24001182)

Restrictions on Copying

Observe the following restrictions to ensure the responsible and legal use of the printer.

Copying of the following items is prohibited by law:

- ❏ Bank bills, coins, government-issued marketable securities, government bond securities, and municipal securities
- ❏ Unused postage stamps, pre-stamped postcards, and other official postal items bearing valid postage

- ❏ Government-issued revenue stamps, and securities issued according to legal procedure

Exercise caution when copying the following items:

- ❏ Private marketable securities (stock certificates, negotiable notes, checks, etc.), monthly passes, concession tickets, etc.
- ❏ Passports, driver's licenses, warrants of fitness, road passes, food stamps, tickets, etc.

Note:
Copying these items may also be prohibited by law.

Responsible use of copyrighted materials:

Printers can be misused by improperly copying copyrighted materials. Unless acting on the advice of a knowledgeable attorney, be responsible and respectful by obtaining the permission of the copyright holder before copying published material.

Where to Get Help

Technical Support Web Site. 262

Contacting Epson Support. 262

Technical Support Web Site

If you need further help, visit the Epson support website shown below. The latest drivers, FAQs, manuals, or other downloadables are also available from the site.

https://support.epson.net/

https://support.epson.com (U.S. and Canada)

https://www.epson.eu/support (Europe)

If your Epson product is not operating properly and you cannot solve the problem, contact Epson support.

Contacting Epson Support

Before Contacting Epson

If your Epson product is not operating properly and you cannot solve the problem using the troubleshooting information in your product manuals, contact Epson support services for assistance.

The following Epson support list is based on the country of sale. Some products may not be sold in your current location, so be sure to contact Epson support for the area in which you purchased your product.

If Epson support for your area is not listed below, contact the dealer where you purchased your product.

Epson support will be able to help you much more quickly if you give them the following information:

- ❏ Product serial number

  (The label attachment position depends on the product; it may be on the back, the open side of the cover, or the bottom.)
- ❏ Product model
- ❏ Product software version

  (Click **About**, **Version Info**, or a similar button in the product software.)
- ❏ Brand and model of your computer
- ❏ Your computer operating system name and version
- ❏ Names and versions of the software applications you normally use with your product

Note:
Depending on the product, the dial list data for fax and/or network settings may be stored in the product's memory. Due to breakdown or repair of a product, data and/or settings may be lost. Epson shall not be responsible for the loss of any data, for backing up or recovering data and/or settings even during a warranty period. We recommend that you make your own backup data or take notes.

Help for Users in the U.S. and Canada

If you need to contact Epson for technical support services, use the following support options.

Internet Support

Visit Epson's support website at https://support.epson.com and select your product for solutions to common problems. You can download drivers and documentation, get FAQs and troubleshooting advice, or e-mail Epson with your questions.

Speak to a Support Representative

Before you call Epson for support, please have the following information ready:

- ❏ Product name
- ❏ Product serial number (located on a label on the product)
- ❏ Proof of purchase (such as a store receipt) and date of purchase
- ❏ Computer configuration
- ❏ Description of the problem

Then call:

- ❏ ET-2900U users: (800) 879-3776, 7 a.m. to 4 p.m., Pacific Time, Monday through Friday
- ❏ Other users in the U.S.: (562) 276-4382, 7 a.m. to 4 p.m., Pacific Time, Monday through Friday
- ❏ Canada: (905) 709-3839, 7 a.m. to 4 p.m., Pacific Time, Monday through Friday

Days and hours of support are subject to change without notice. Toll or long distance charges may apply.

Purchase Supplies and Accessories

You can purchase genuine Epson ink and paper at https://epson.com (U.S. sales) or https://epson.ca (Canadian sales). You can also purchase supplies from an Epson authorized reseller. To find the nearest one, call 800-GO-EPSON (800-463-7766) in the U.S. or 800-807-7766 in Canada.

Note:
For ET-2900U users:

Use only the Epson 560 ink provided to you as part of the ReadyPrint program.

Help for Users in Europe

Check your Pan-European Warranty Document for information on how to contact Epson support.

Help For Users in Middle East, Turkey, Africa, Central and West Asia

Please refer to https://www.epson.com/eme for information on how to contact Epson support.

Help for Users in Taiwan

Contacts for information, support, and services are:

World Wide Web

https://www.epson.com.tw

Information on product specifications, drivers for download, and products enquiry are available.

Epson HelpDesk

Phone: +886-2-2165-3138

Our HelpDesk team can help you with the following over the phone:

- ❏ Sales enquiries and product information
- ❏ Product usage questions or problems
- ❏ Enquiries on repair service and warranty

Repair service center:

https://www.tekcare.com.tw/branchMap.page

TekCare corporation is an authorized service center for Epson Taiwan Technology & Trading Ltd.

Help for Users in Australia

Epson Australia wishes to provide you with a high level of customer service. In addition to your product manuals, we provide the following sources for obtaining information:

Internet URL

https://www.epson.com.au

Access the Epson Australia World Wide Web pages. Worth taking your modem here for the occasional surf! The site provides a download area for drivers, Epson contact points, new product information and technical support (e-mail).

Epson Helpdesk

Phone: 1300-361-054

Epson Helpdesk is provided as a final backup to make sure our clients have access to advice. Operators on the Helpdesk can aid you in installing, configuring and operating your Epson product. Our Pre-sales Helpdesk staff can provide literature on new Epson products and advise where the nearest dealer or service agent is located. Many types of queries are answered here.

We encourage you to have all the relevant information on hand when you ring. The more information you prepare, the faster we can help solve the problem. This information includes your Epson product manuals, type of computer, operating system, application programs, and any information you feel is required.

Transportation of Product

Epson recommends retaining product packaging for future transportation. Securing the ink tank with tape and keeping the product upright is also recommended.

Help for Users in New Zealand

Epson New Zealand wishes to provide you with a high level of customer service. In addition to your product documentation, we provide the following sources for obtaining information:

Internet URL

https://www.epson.co.nz

Access the Epson New Zealand World Wide Web pages. Worth taking your modem here for the occasional surf! The site provides a download area for drivers, Epson contact points, new product information and technical support (e-mail).

Epson Helpdesk

Phone: 0800 237 766

Epson Helpdesk is provided as a final backup to make sure our clients have access to advice. Operators on the Helpdesk can aid you in installing, configuring and operating your Epson product. Our Pre-sales Helpdesk staff can provide literature on new Epson products and advise where the nearest dealer or service agent is located. Many types of queries are answered here.

We encourage you to have all the relevant information on hand when you ring. The more information you prepare, the faster we can help solve the problem. This information includes your Epson product documentation, type of computer, operating system, application programs, and any information you feel is required.

Transportation of Product

Epson recommends retaining product packaging for future transportation. Securing the ink tank with tape and keeping the product upright is also recommended.

Help for Users in Singapore

Sources of information, support, and services available from Epson Singapore are:

World Wide Web

https://www.epson.com.sg

Information on product specifications, drivers for download, Frequently Asked Questions (FAQ), Sales Enquiries, and Technical Support via e-mail are available.

Epson HelpDesk

Toll Free: 800-120-5564

Our HelpDesk team can help you with the following over the phone:

- ❏ Sales enquiries and product information
- ❏ Product usage questions or problem troubleshooting
- ❏ Enquiries on repair service and warranty

Help for Users in Thailand

Contacts for information, support, and services are:

World Wide Web

https://www.epson.co.th

Information on product specifications, drivers for download, Frequently Asked Questions (FAQ), and e-mail are available.

Epson Call Centre

Phone: 66-2460-9699

Email: support@eth.epson.co.th

Our Call Centre team can help you with the following over the phone:

❏ Sales enquiries and product information

❏ Product usage questions or problems

❏ Enquiries on repair service and warranty

Help for Users in Vietnam

Contacts for information, support, and services are:

Epson Service Center

27 Yen Lang, Trung Liet Ward, Dong Da District, Ha Noi City. Tel: +84 24 7300 0911

38 Le Dinh Ly, Thac Gian Ward, Thanh Khe District, Da Nang. Tel: +84 23 6356 2666

194/3 Nguyen Trong Tuyen, Ward 8, Phu Nhuan Dist., HCMC. Tel: +84 28 7300 0911

31 Phan Boi Chau, Ward 14, Binh Thanh District, HCMC. Tel: +84 28 35100818

Help for Users in Indonesia

Contacts for information, support, and services are:

World Wide Web

https://www.epson.co.id

❏ Information on product specifications, drivers for download

❏ Frequently Asked Questions (FAQ), Sales Enquiries, questions through e-mail

Epson Hotline

Phone: 1500-766 (Indonesia Only)

Email: customer.care@ein.epson.co.id

Our Hotline team can help you with the following over the phone or email:

❏ Sales enquiries and product information

❏ Technical support

Help for Users in Hong Kong

To obtain technical support as well as other after-sales services, users are welcome to contact Epson Hong Kong Limited.

Internet Home Page

https://www.epson.com.hk

Epson Hong Kong has established a local home page in both Chinese and English on the Internet to provide users with the following information:

- ❏ Product information
- ❏ Answers to Frequently Asked Questions (FAQs)
- ❏ Latest versions of Epson product drivers

Technical Support Hotline

You can also contact our technical staff at the following telephone and fax numbers:

Phone: 852-2827-8911

Fax: 852-2827-4383

Help for Users in Malaysia

Contacts for information, support, and services are:

World Wide Web

https://www.epson.com.my

- ❏ Information on product specifications, drivers for download
- ❏ Frequently Asked Questions (FAQ), Sales Enquiries, questions through e-mail

Epson Call Centre

Phone: 1800-81-7349 (Toll Free)

Email: websupport@emsb.epson.com.my

- ❏ Sales enquiries and product information
- ❏ Product usage questions or problems
- ❏ Enquiries on repair services and warranty

Epson Malaysia Sdn Bhd (Head Office)

Phone: 603-56288288

Fax: 603-5628 8388/603-5621 2088

Help for Users in India

Contacts for information, support, and services are:

World Wide Web

https://www.epson.co.in/

Information on product specifications, drivers for download, and products enquiry are available.

Toll Free Helpline

For Service, Product information or to order consumables -

18004250011 / 186030001600 / 1800123001600 (9AM – 6PM)

Email

calllog@epson–india.in

WhatsApp

+91 96400 00333

Help for Users in the Philippines

To obtain technical support as well as other after sales services, users are welcome to contact the Epson Philippines Corporation at the telephone, fax numbers and e-mail address below:

World Wide Web

https://www.epson.com.ph

Information on product specifications, drivers for download, Frequently Asked Questions (FAQ), and E-mail Enquiries are available.

Epson Philippines Customer Care

Toll Free: (PLDT) 1-800-1069-37766

Toll Free: (Digitel) 1-800-3-0037766

Metro Manila: +632-8441-9030

Web Site: https://www.epson.com.ph/contact

E-mail: customercare@epc.epson.com.ph

Accessible 9am to 6pm, Monday through Saturday (Except public holidays)

Our Customer Care team can help you with the following over the phone:

- ❏ Sales enquiries and product information
- ❏ Product usage questions or problems
- ❏ Enquiries on repair service and warranty

Epson Philippines Corporation

Trunk Line: +632-8706-2609

Fax: +632-8706-2663 / +632-8706-2665