Form No. 3446-733 Rev A

TransPro™ 200 Tow-Behind Trailer

Model No. 04219—Serial No. 400000000 and Up

Model No. 04229—Serial No. 400000000 and Up

Model No. 04239—Serial No. 400000000 and Up

Installation Instructions

Safety

- The TransPro 200 trailer is intended for use with walk-behind Greensmaster machines only. Towing incompatible products can result in damage to the trailer and/or injury to the operator. Refer to Compatible Machines (page 9) for a complete list of compatible machines.
- Use only a vehicle with the proper tow rating. The TransPro 200 trailer and 2 greens mowers weigh approximately 1,150 lb (522 kg). Ensure that the tow vehicle has adequate braking and handling capacity by checking the recommendations of the vehicle manufacturer
- Ensure that the trailer is properly connected to the tow vehicle before loading or unloading the greens mowers to prevent sudden unintended tongue movement or flip-up. The trailer tongue should be parallel to the ground when you align it with the tow vehicle hitch.
- The trailer adds extra towing weight to the vehicle. Drive the vehicle safely.
  - Do not drive the machine on highways or public roads.
  - Always slow the tow vehicle when approaching and while making a turn.
  - Always slow the tow vehicle when driving in unfamiliar areas or over rough terrain.
  - Always slow the tow vehicle when changing the direction of travel or preparing to stop.
  - Always slow the tow vehicle when turning or driving on slopes.
  - Do not make sudden or sharp turns. Do not suddenly change direction of travel on an incline, ramp, grade, slope, or similar surface.
  - The maximum towing speed is 15 mph (24 km/h). Always adjust the tow-vehicle speed to allow for existing ground conditions, such as wet slick surfaces, loose sand or gravel and/or low visibility conditions, such as dim or bright lighting, fog, mist, or rain.
  - Be especially careful when driving a heavily loaded vehicle down an incline or slope. Drive the vehicle up and down the face of the slopes, inclines, or grades whenever possible. Do not drive across the face of a slope if at all possible. There is a risk of upsetting the vehicle, which can result in serious injury or death.
- Before backing up, look behind you and ensure that it is clear of people and objects. Back up slowly and watch the trailer movement closely.
- Use extreme caution and slow speed when backing up the trailer and tow vehicle.
- Watch out for traffic when near or crossing roads. Always yield the right of way to pedestrians and other vehicles.
- If the trailer begins to vibrate abnormally, stop the tow vehicle immediately. Shut off the tow-vehicle engine. Repair all damage before towing.
- Before servicing or making any adjustments to the trailer, do the following:
  - Stop the tow vehicle and engage the parking brake.
  - Shut off the tow-vehicle engine and remove the key.
- While the trailer is disconnected from tow vehicle:
  - Store the trailer on level ground.
  - Chock the wheels to prevent the trailer from moving.
- Keep all fasteners tightened securely. Replace any parts removed when servicing or making adjustments.

© 2021— The Toro® Company
8111 Lyndale Avenue South
Bloomington, MN 55420

Register at www.Toro.com.

CE

Original Instructions (EN)
Printed in the USA
All Rights Reserved

3446-733

Safety and Instructional Decals

Safety decals and instructions are easily visible to the operator and are located near any area of potential danger. Replace any decal that is damaged or missing.



decal133-8061

133-8061

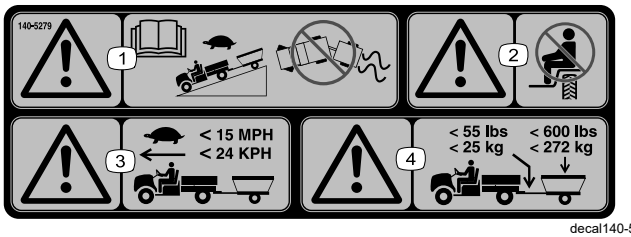

decal140-5279

140-5279

1. Warning—read the *Operator's Manual*; drive slowly when driving downhill with a trailer; do not lose control of the vehicle and trailer.
2. Warning—do not carry passengers.
3. Warning—drive slowly when driving with a trailer; do not exceed 24 km/h (15 mph).
4. Warning—the maximum trailer weight is 272 kg (600 lb) and the maximum tongue weight is 25 kg (55 lb).

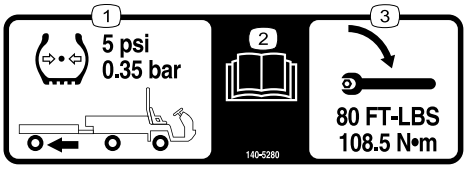

decal140-5280

140-5280

1. The trailer tires should be inflated to 0.35 bar (5 psi).
2. Read the *Operator's Manual*.
3. Torque the trailer wheel nuts to 108.5 N·m (80 ft-lb).



decal140-5281

140-5281

1. Warning—do not carry passengers on the trailer.

Installation

Assembling the Appropriate Configuration Kit

You can install one of the following kits per your desired configuration:

- Rail-Loading Kit (Model 04229); refer to Assembling the Rail-Loading Kit (page 2)
- Wheel-Loading Kit (Model 04219); refer to Assembling the Wheel-Loading Kit (page 5)

Assembling the Rail-Loading Kit

Note: Perform the following steps to assemble the left- and right-sided rails. The following illustrations show the right side of the rail-loading kit.

1. Install a carriage bolts and a flange nuts (1/4 inch) to the ramp assembly (Figure 1).

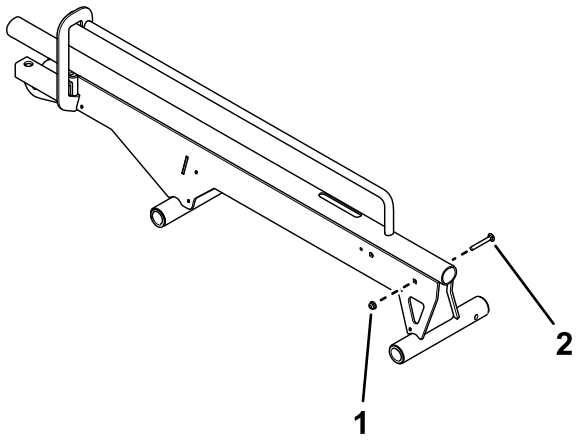

g348132

Figure 1

Right side shown.

1. Flange nut (1/4 inch)
2. Carriage bolt

2. Use a pins and a hex-head screw to secure the wheel stop to the rail assembly (Figure 2)

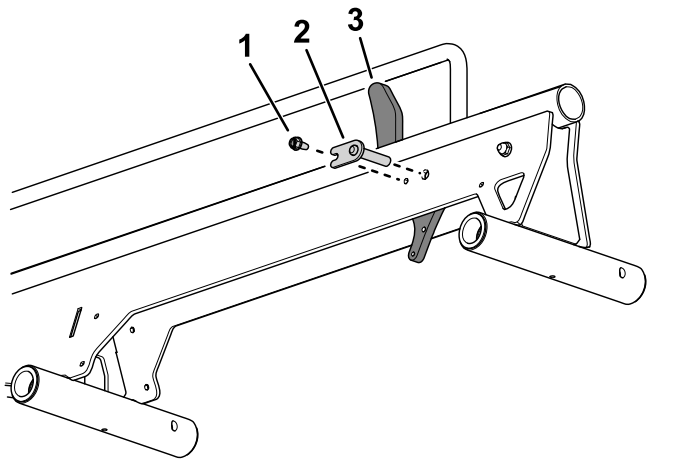

Figure 2

1. Hex-head screw
2. Pin
3. Wheel stop

3. Use a chain link to install the chain to the chain turnbuckle (Figure 3).

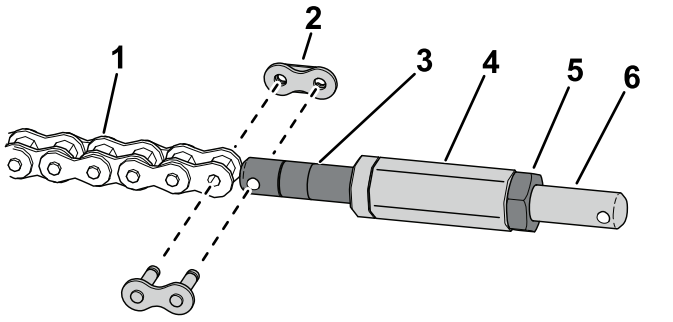

Figure 3

1. Chain
2. Chain link
3. Chain turnbuckle
4. Hex shaft
5. Jam nut
6. Chain-link turnbuckle

4. Install the hex shaft to the chain turnbuckle (Figure 3).
5. Use a jam nut to install the chain-link turnbuckle to the hex shaft (Figure 3).
6. Use a chain link to install the chain-link turnbuckle to the wheel stop (Figure 4).

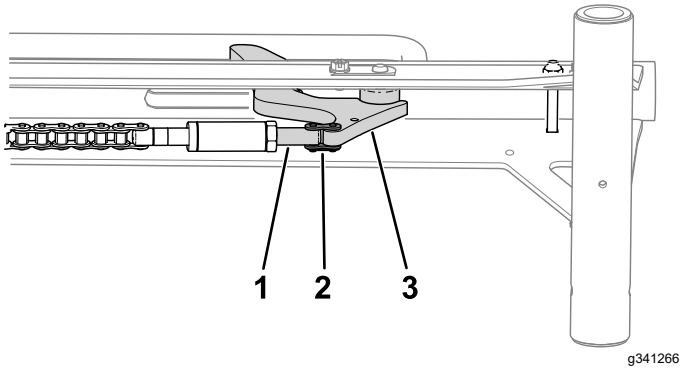

Figure 4

1. Chain-link turnbuckle
2. Chain link
3. Wheel stop

7. Connect the spring to the wheel stop and bolt inside of the rail assembly (Figure 5).

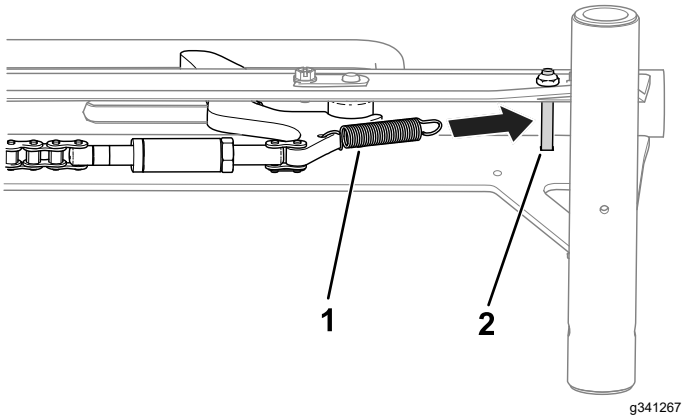

Figure 5

1. Spring
2. Bolt

8. Use a flange nut (5/16 inch), 2 washers, and a shoulder bolts to secure the ramp assembly to the rail assembly (Figure 6).

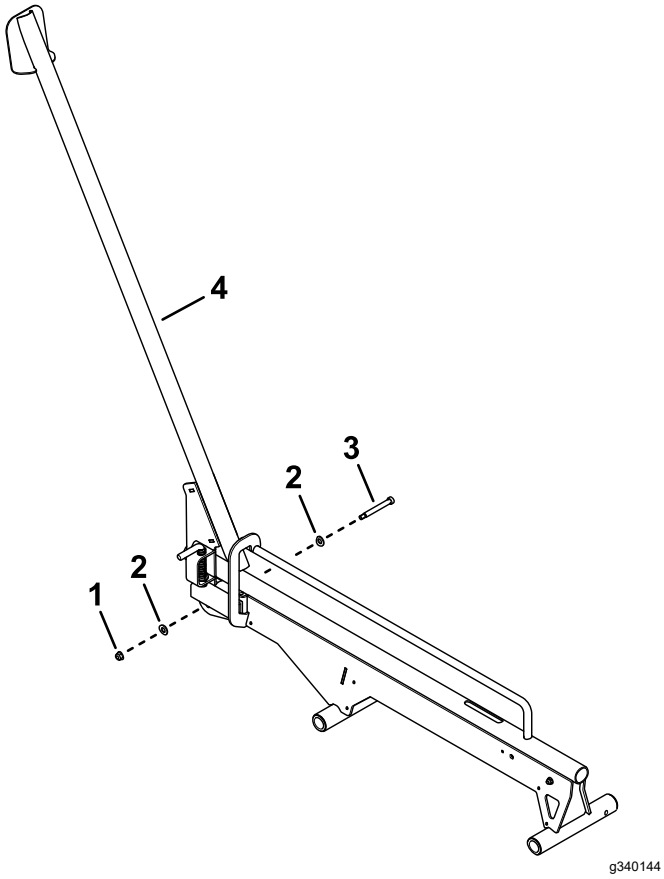

Figure 6

1. Flange nut (5/16 inch)
2. Washers
3. Shoulder bolt
4. Rail assembly

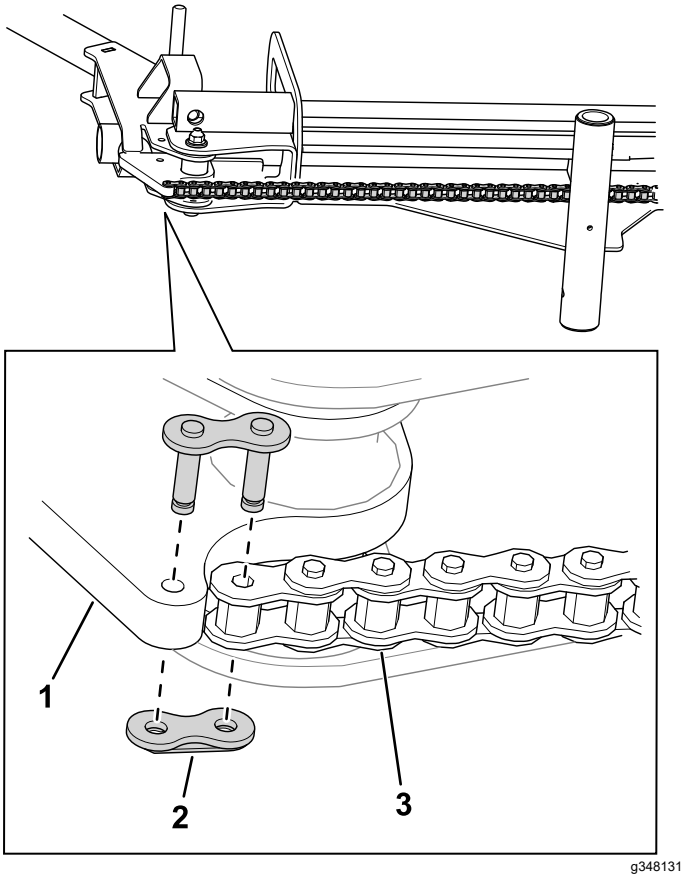

Figure 7

1. Ramp assembly
2. Chain link
3. Chain

9. Use a chain link to connect the chain to the ramp assembly (Figure 7).

10. Use 10 hex-head screws to secure the chain covers to the ramp assemblies (Figure 8).

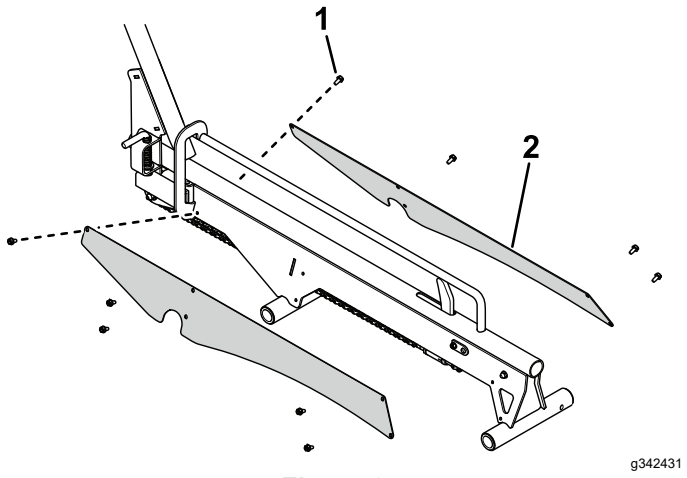

Figure 8

1. Hex-head screw
2. Chain cover

11. Check the stop-gap length; refer to Checking the Stop Gap (page 16).

Assembling the Wheel-Loading Kit

Note: Perform the following steps to assemble the left- and right-sided wheel ramps. The following illustrations show the right side of the wheel-loading kit.

1. Use 4 torx-head screws and 4 nuts (5/16 inch) to secure the latch-pin bracket to the guide plate on the ramp assembly (Figure 9).

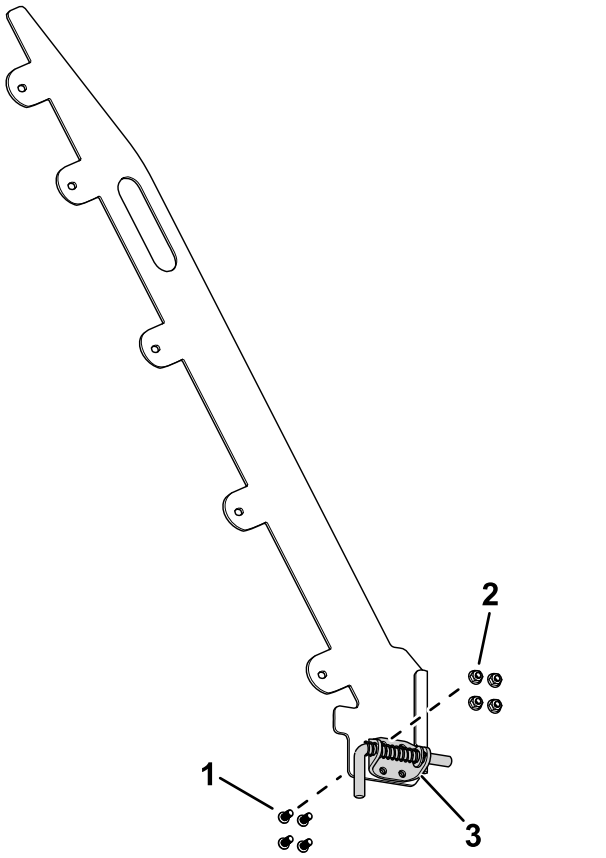

Figure 9

Right side shown.

1. Torx-head screw
2. Nut (5/16 inch)
3. Latch-pin bracket

2. Use 10 bolts (5/16 x 3/4 inch) and 10 nylock nuts (5/16 inch) to secure the guide plate to the ramp assembly (Figure 10).

   The guide plates must be installed with the latch pins facing the outside. Refer to Figure 30 in Loading the Trailer (page 12) for an illustration of properly installed guide plates.

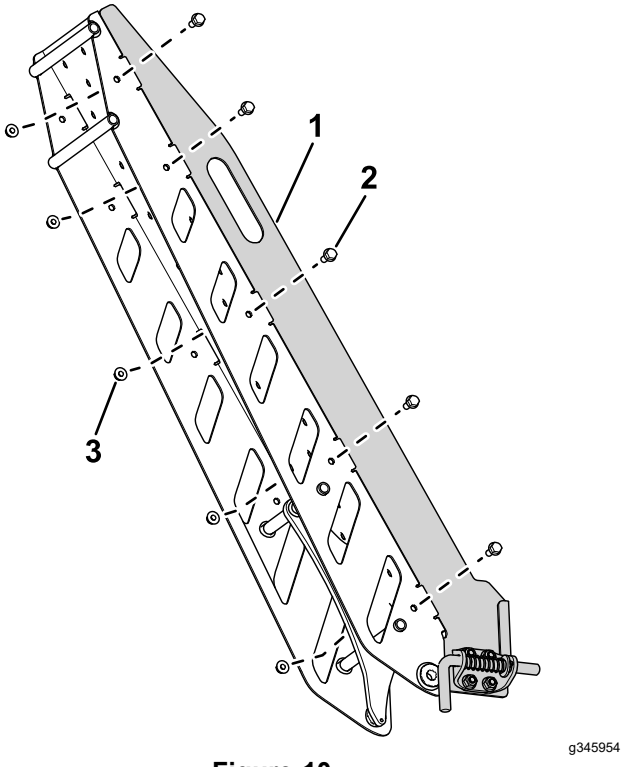

Figure 10

1. Guide plate
2. Bolt (5/16 x 3/4 inch)
3. Nylock nut (5/16 inch)

3. Use a nut (1/4 inch) to install a bumper to the ramp assembly (Figure 11).

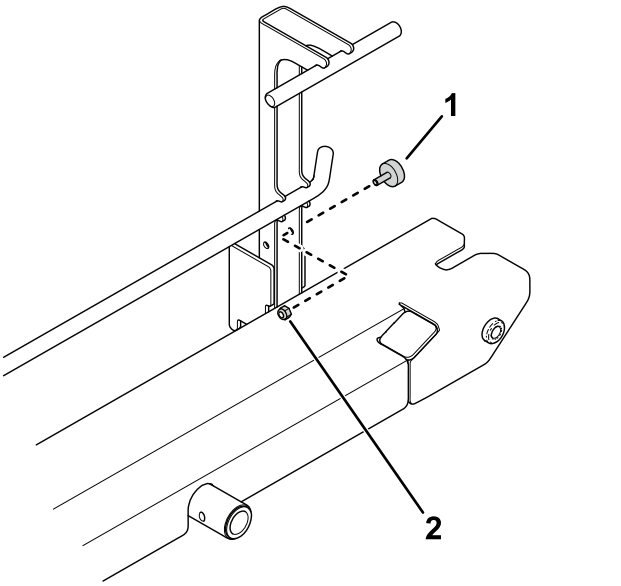

Figure 11

1. Bumper
2. Nut (1/4 inch)

4. Use a flag pin and a hex-head screw to secure the wheel stop to the ramp assembly (Figure 12).

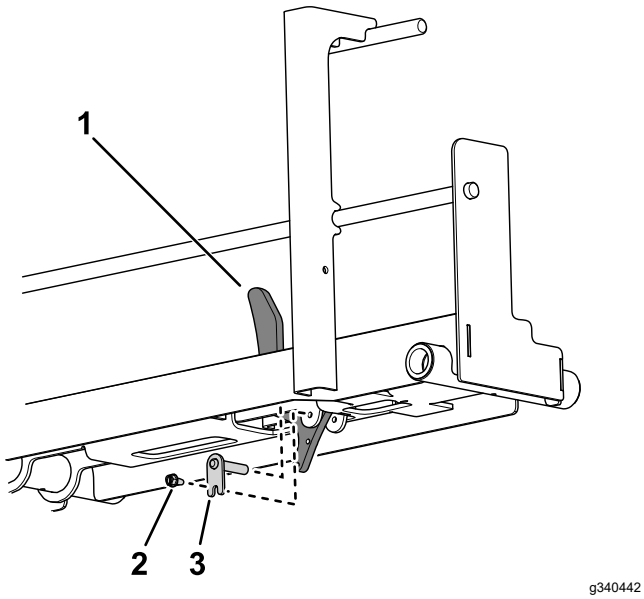

g340442

Figure 12

1. Wheel stop
2. Hex-head screw
3. Flag pin

5. Use a chain link to install the chain to the chain turnbuckle (Figure 13).

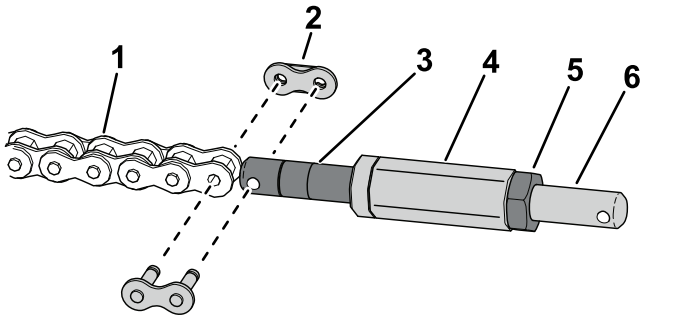

g348128

Figure 13

1. Chain
2. Chain link
3. Chain turnbuckle
4. Hex shaft
5. Jam nut
6. Chain-link turnbuckle

6. Install the hex shaft to the chain turnbuckle (Figure 13).
7. Use a jam nut to install the chain-link turnbuckle to the hex shaft (Figure 13).
8. Use a chain link to install the chain-link turnbuckle to the wheel stop (Figure 14).

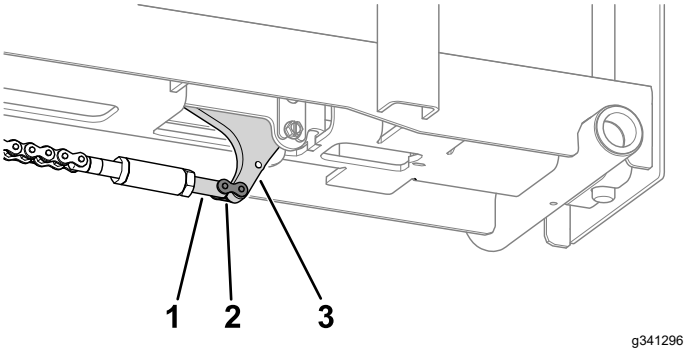

g341296

Figure 14

1. Chain-link turnbuckle
2. Chain link
3. Wheel stop

9. Connect the spring to the wheel stop and the ramp bottom (Figure 15).

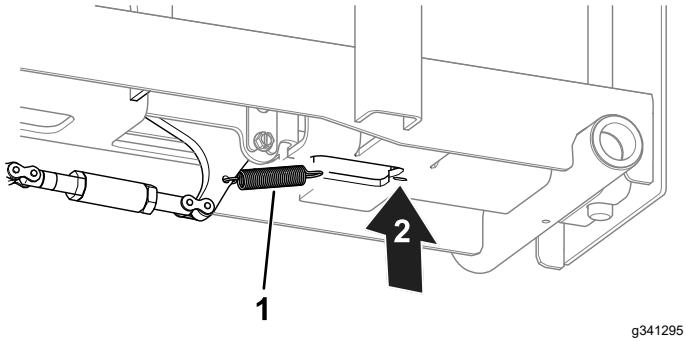

g341295

Figure 15

1. Spring
2. Connect the spring here.

10. Use a pivot pin and a cotter pin to secure the ramp assembly to the rail assembly (Figure 16).

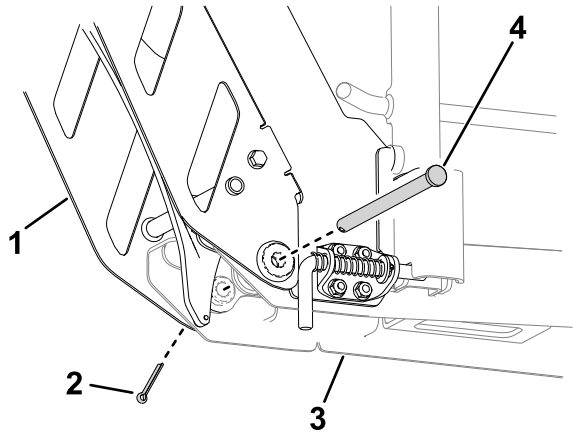

g349912

Figure 16

1. Ramp assembly
2. Cotter pin
3. Rail assembly
4. Pivot pin

11. Use a chain link to connect each chain to the ramp assemblies (Figure 17).

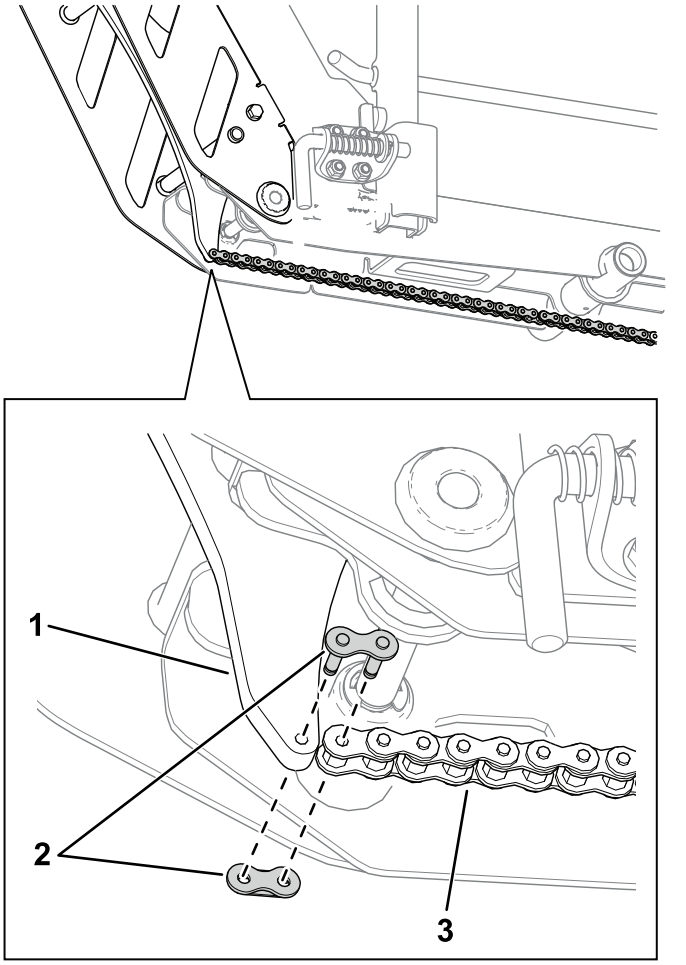

g348127

Figure 17

1. Ramp assembly
2. Chain link
3. Chain

Assembling the Trailer

Installing the Support Rods to the Main Frame

1. Position the center support on the main frame as shown in Figure 18.

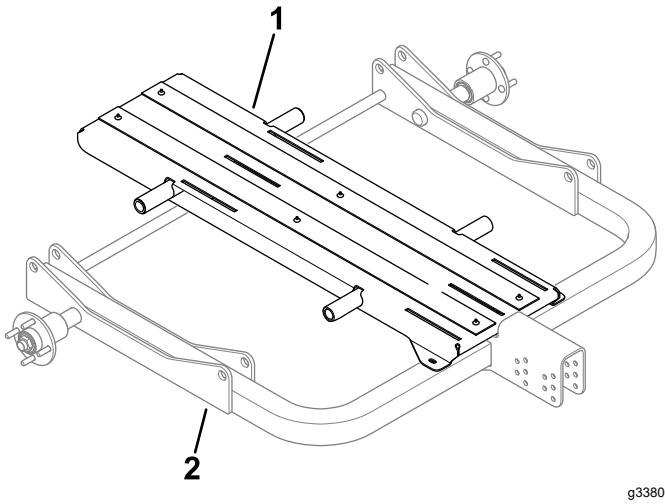

g338068

Figure 18

1. Center support
2. Main frame

2. Have an assistant hold the wheel kit or rail kit and center support in-place while installing the support rods through the holes in the kit, center support, and main frame (Figure 19).

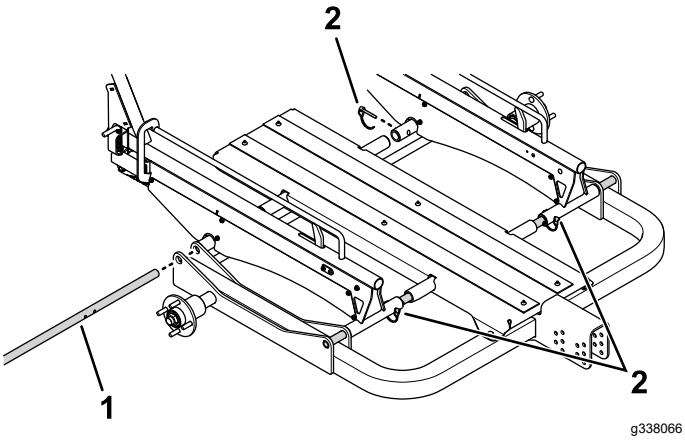

g338066

Figure 19

1. Support rod
2. Pins

3. Install 4 pins through the holes in the wheel kit or rail kit for your specific machine width; refer to Configuring the Trailer Width (page 10).

Securing the Center Support to the Main Frame

Use 2 screws (3/8 inch) to secure the center support to the main frame (Figure 20).

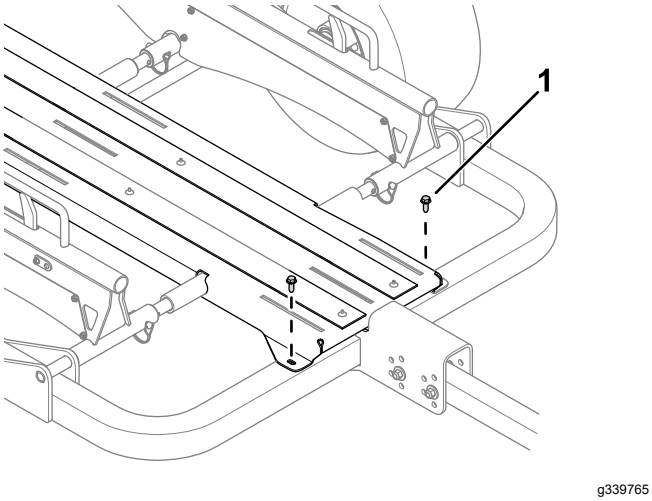

Figure 20

1. Screw (3/8 inch)

Installing the Wheels

1. Mount a wheel assembly to each axle hub with 4 lug nuts (Figure 21).

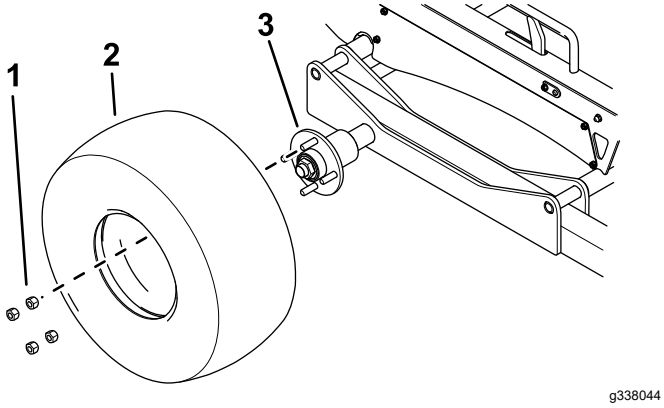

Figure 21

1. Lugnut
2. Tire
3. Axle

2. Torque the lug nuts as specified in Checking the Torque of the Wheel Lug Nuts (page 16).
3. Deflate the tires to the specification listed in Checking the Tire Air Pressure (page 15).

Installing the Roller Mounts to the Center Support

Use 6 carriage bolts and 6 flange nuts (5/16 inch) to secure the roller mounts to the center support (Figure 22).

Loosely install the fasteners so that the roller mount can slide back-and-forth on the center support. Tighten the fasteners to secure the roller mounts in-place after you load the trailer; refer to Loading the Trailer (page 12).

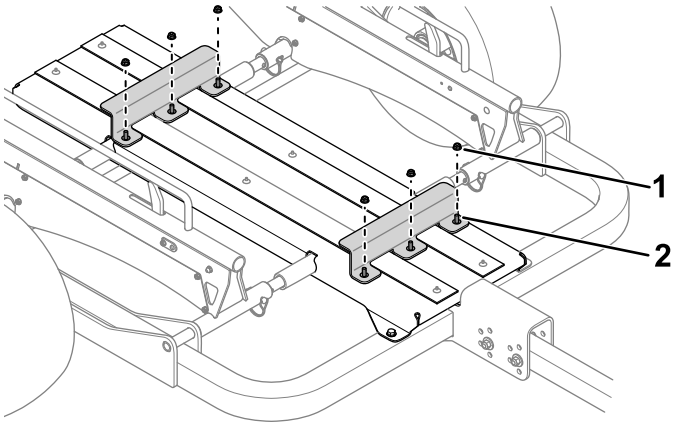

Figure 22

1. Flange nut (5/16 inch)
2. Carriage bolt

Installing the Trailer Tongue to the Main Frame

1. Use 2 bolts (7/16 inch), 4 washers, and 2 locknuts to secure the trailer tongue to the main frame (Figure 23).

   The trailer tongue must be parallel to the ground when the trailer is attached to the tow vehicle. Ensure that the tongue is parallel to the ground before you torque the hardware.

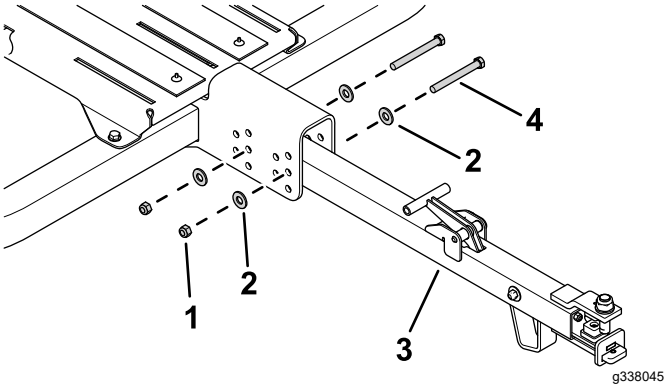

Figure 23

1. Locknut
2. Washer
3. Trailer tongue
4. Bolt (7/16 inch)

2. Torque the hardware to 95 N·m (70 ft-lb).

Operation

Compatible Machines

This trailer is designed to be configured for the following walk-behind Greensmaster machines without the need for additional kits:

Machine	Model
Greensmaster 1018	04820
Greensmaster 1021	04830
Greensmaster Flex 1018	04850
Greensmaster Flex 1021	04860
Greensmaster e1021	04831
Greensmaster eFlex 1021	04861

This trailer can be configured for the following walk-behind Greensmaster machines with an additional configuration kit (sold separately):

- Greensmaster Flex 18/21 series
- Greensmaster Flex 1800/2100 series (including eFlex)
- Greensmaster 800/1000 series

Contact your authorized Toro distributor for more information.

Configuring the Trailer Width

Note: Greens mowers with a width larger than 21 inches (e.g., Greensmaster 1026) cannot be loaded on the trailer.

- Configuring the trailer for 18-inch greens mowers: Use the pins to secure the rail pivots to the inside holes (Figure 24).

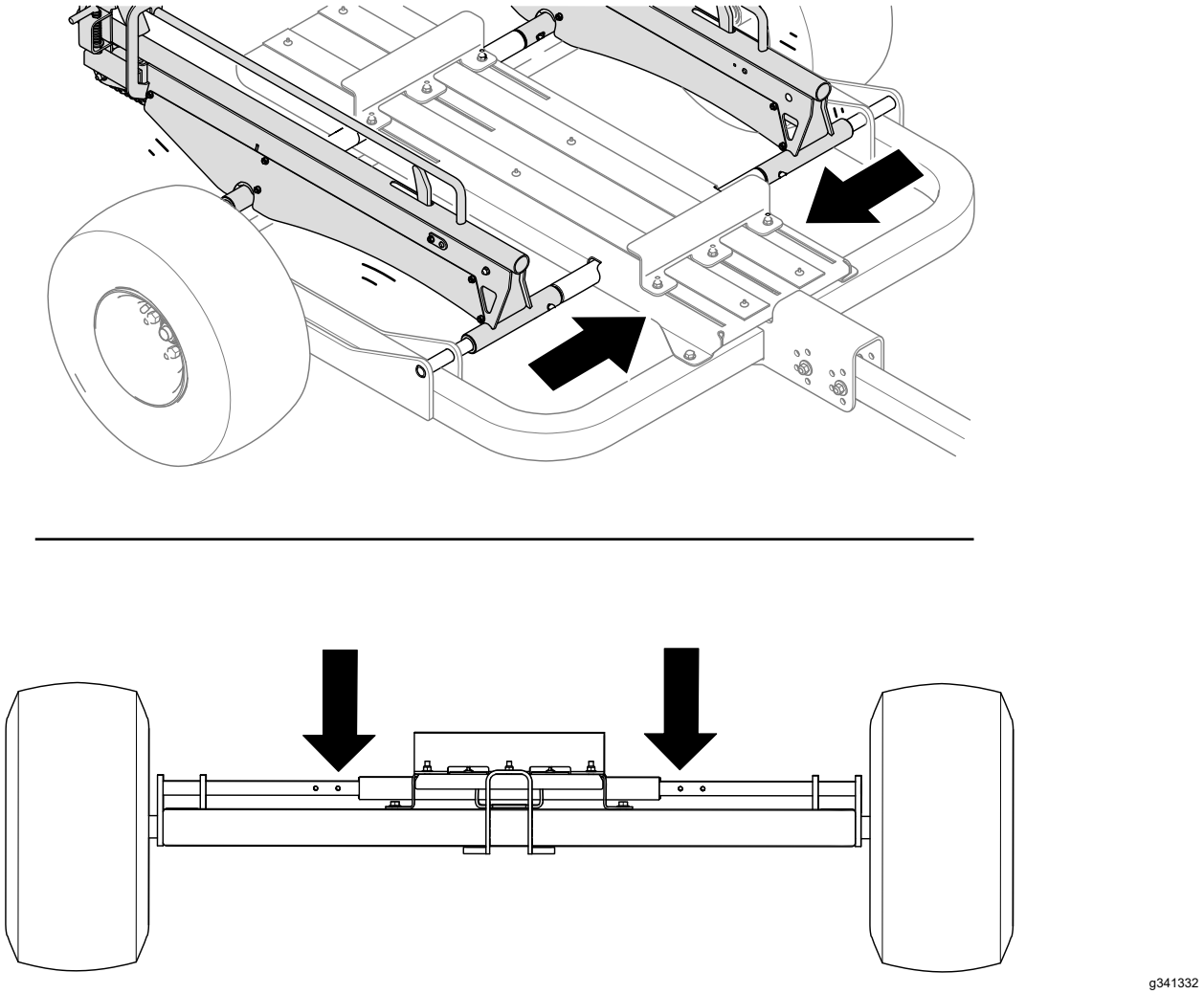

g341332

Figure 24

- Configuring the trailer for 21-inch greens mowers: Use the pins to secure the rail pivots to the outside holes (Figure 25).

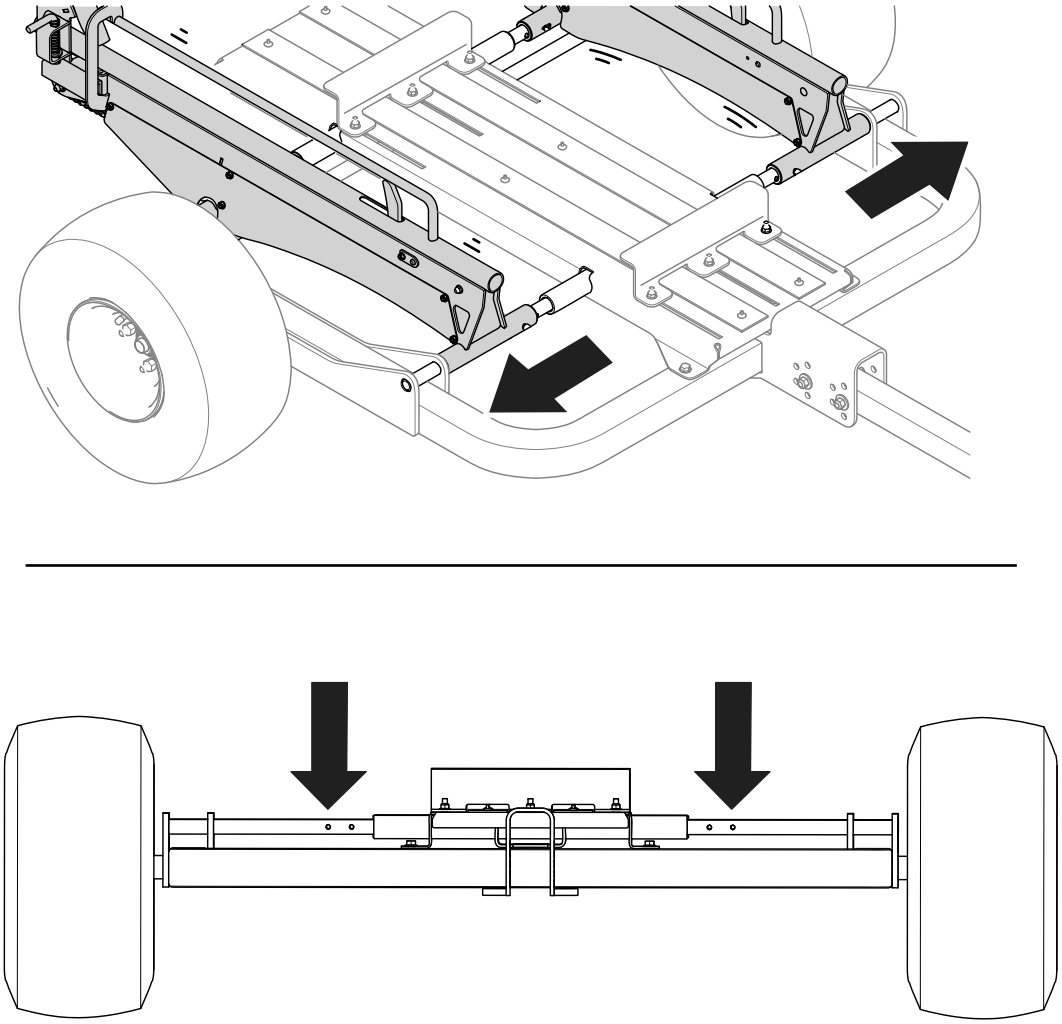

g341333

Figure 25

Securing the Trailer to the Tow Vehicle

1. Lift up the tongue handle (Figure 26).

   Note: Lifting the handle retracts the slide assembly.

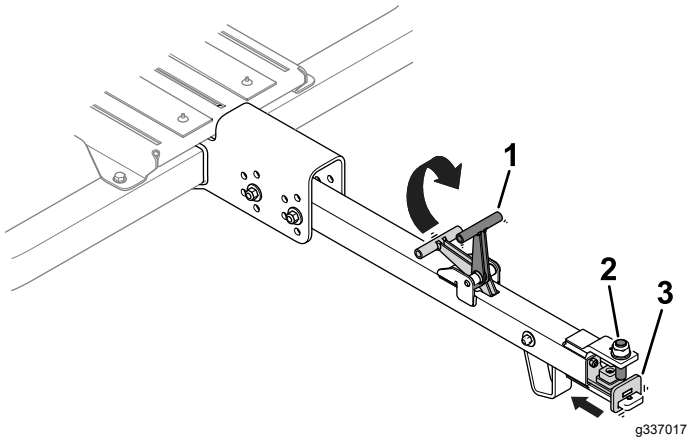

Figure 26

1. Tongue handle
2. Tongue pin
3. Slide assembly

2. Align the tongue pin with the tow-vehicle hitch (Figure 27).

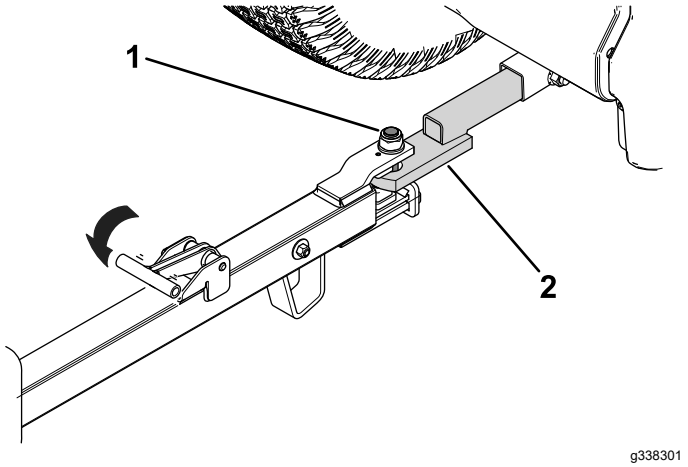

Figure 27

1. Tongue pin
2. Tow-vehicle hitch

3. Release the tongue handle (Figure 27) to secure the trailer to the tow-vehicle hitch.

   Ensure that the slide assembly is centered below the tongue pin.

Loading the Trailer

Preparing the Load the Trailer

1. Chock the trailer wheels.
2. Pull the latch pins on both sides of the trailer to release the rails or ramps and lower them to the ground (Figure 28).

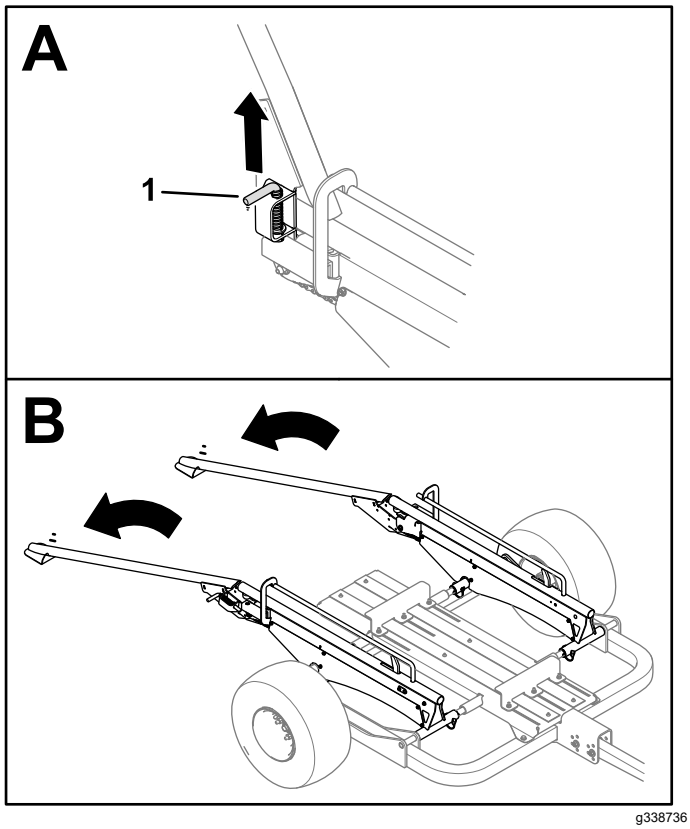

Figure 28

Rail Kit equipped

1. Latch pin (right side shown)

3. Remove the grass baskets from the greens mower.

   Note: You can store the grass baskets in the tow vehicle.

4. Refer to the appropriate instruction for an equipped ramp or rail kit as follows:

   - **Rail Kit:** Install the rail wheels onto the hex shafts (Figure 29).

     Note: The rail-wheel clip slots are facing outwards for all walk-behind Greensmaster machines.

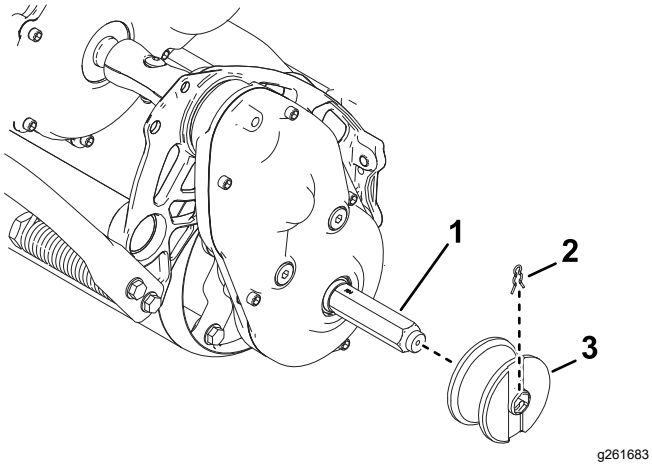

Figure 29

1. Hex shaft
2. Clip
3. Rail wheel

- **Wheel Kit:** Install the transport wheels onto the hex shafts; refer to your traction unit *Operator's Manual*.

Loading a Machine on the Trailer

1. Use the flat ramps or rails to slowly drive the machine onto the trailer until the front roller seats within the roller mount (Figure 30).

   Note: When you load a machine onto the trailer for the first time, the roller-mount fasteners should be loose and allow the roller mount to slide forward.

2. Shut off the machine and engage the parking brake.
3. If you are hauling 2 machines, repeat steps 1 and 2 for the second machine. Ensure that the front roller seats within the roller mount.
4. Raise the ramps and engage the latch pins (Figure 30).
   - Wheel Kit equipped: When you raise the ramps, the latch pins automatically engage the locking bracket and keep the ramps in the raised position.
   - Rail Kit equipped: Lift the latch pins, raise the ramps, and release the latch pins to keep the ramps in the raised position.

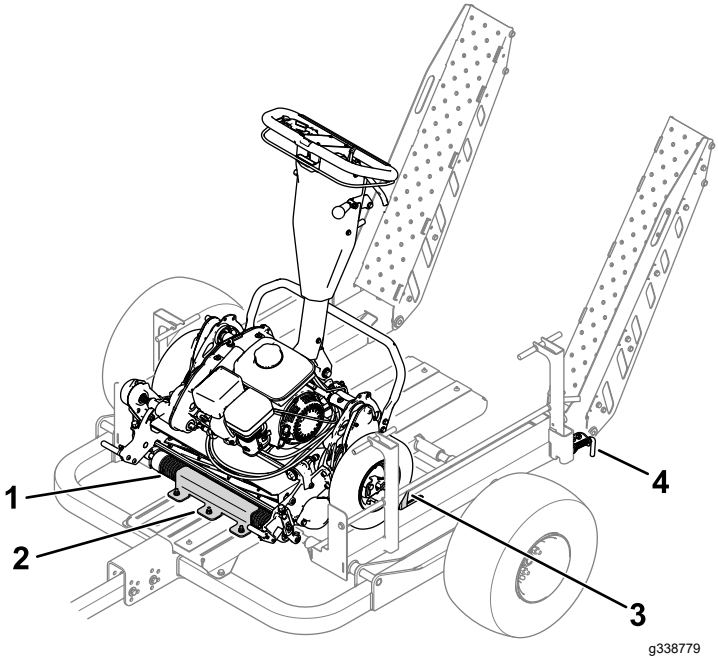

Figure 30

Wheel Kit equipped

1. Front roller
2. Roller mount
3. Wheel stop
4. Latch pin (left side shown)

5. If you are loading the trailer for the first time, perform the following steps to secure the machines in-place:
   A. With the ramps locked in the raised position, move the rear machine towards the back of the trailer until the transport wheels or rail wheels contact the ramp.
   B. Slide back the rear roller mount (Figure 31) until it contacts the rear-machine front roller.

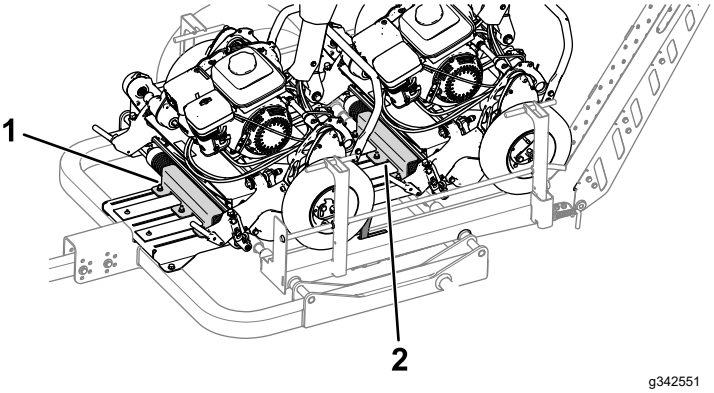

Figure 31

Left wheel removed for clarity.

1. Front roller mount
2. Rear roller mount

   C. Ensure that the front roller is completely seated underneath the roller mount and tighten the flange nuts that secure the roller

mount in place; refer to Checking the Torque of the Roller-Mount Fasteners (page 15).

D. Move the front machine back until the transport wheels or rail wheels contact the raised wheel stops.

E. Slide back the front roller mount (Figure 31) until it contacts the front-machine front roller.

If you load different machines or machine with different configurations (e.g., a machine with an equipped groomer-drive kit), perform these steps to ensure that the machine is properly secured on the trailer.

Maintenance

Recommended Maintenance Schedule(s)

Maintenance Service Interval	Maintenance Procedure
After the first 10 hours	• Check the torque of the wheel lug nuts.
Before each use or daily	• Check the tire air pressure.
Yearly	• Check the wheel bearings for endplay. • Lubricate the chain. • Check the torque of the roller-mount fasteners. • Check the stop gap (rail-loading kit only).

Checking the Tire Air Pressure

Service Interval: Before each use or daily

Tire air pressure specification: 34 kPa (5 psi)

Check the air pressure in the tires (Figure 32). Add or remove air as needed to set the air pressure in the tires to the tire air-pressure specification.

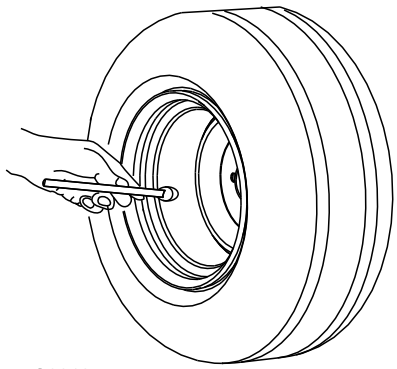

Figure 32

Checking the Wheel Bearings for Freeplay

Service Interval: Yearly

1. Remove any machines that may be stored on the trailer.
2. Use a jack to raise the trailer and place jack stands under the trailer.
3. Check each wheel for excessive freeplay (i.e., free movement of the tire and hub assembly).

   If you detect excessive freeplay, contact to your authorized Toro distributor.

Lubricating the Chains

Service Interval: Yearly

Apply general-purpose grease to each chain.

Checking the Torque of the Roller-Mount Fasteners

Service Interval: Yearly

Torque the roller-mount fasteners (Figure 33) to 79 N·m (700 in-lb).

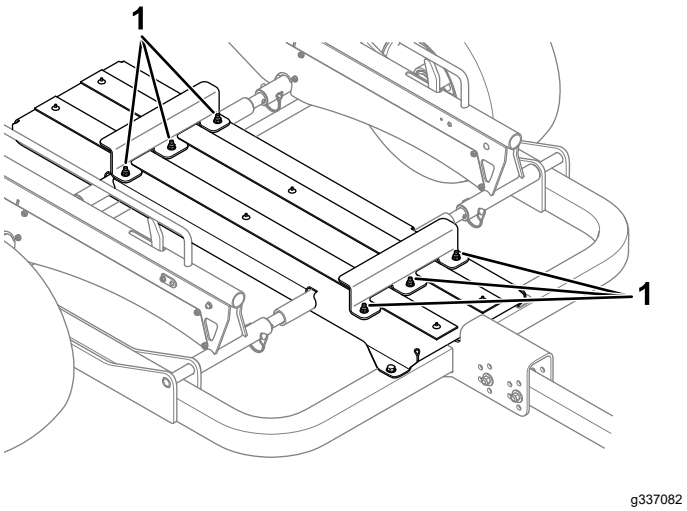

Figure 33

1. Roller-mount fasteners

Checking the Torque of the Wheel Lug Nuts

Service Interval: After the first 10 hours

Torque specification: 108 N·m (80 ft-lb)

Check the torque of the wheel lug nuts each time you install the wheels and after the first 10 hours of operation.

Torque the wheel lug nuts in the pattern as shown in Figure 34 to the specified torque.

⚠ WARNING

Failure to maintain proper torque could result in failure or loss of wheel and could result in personal injury.

Torque the wheel lug nuts to the specified torque.

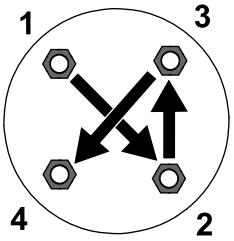

g274650

Figure 34

Checking the Stop Gap

Rail-Loading Kit Only

Service Interval: Yearly

With the ramps secured in the raised position, check the gap measurement between the stop and bottom of the rail.

The appropriate measurement should be 2.5 mm (0.1 inch) as shown in Figure 35. If you observe a different measurement, adjust the turnbuckle and jam nut until you reach the appropriate measurement.

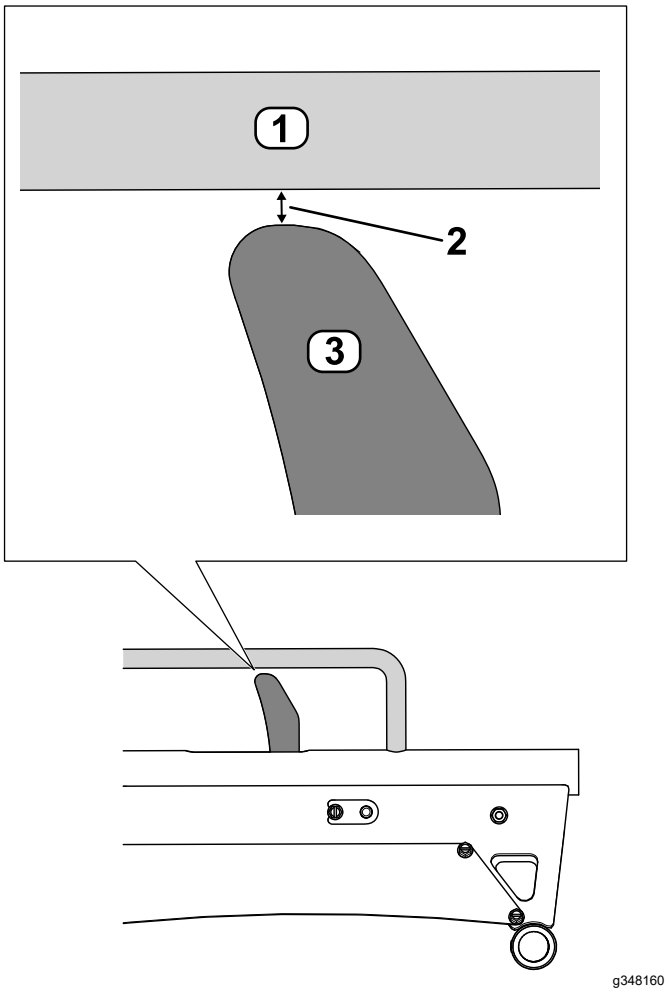

g348160

Figure 35

1. Rail
2. Gap—2.5 mm (0.1 inch)
3. Stop

Notes:

EEA/UK Privacy Notice

Toro's Use of Your Personal Information

The Toro Company ("Toro") respects your privacy. When you purchase our products, we may collect certain personal information about you, either directly from you or through your local Toro company or dealer. Toro uses this information to fulfil contractual obligations - such as to register your warranty, process your warranty claim or to contact you in the event of a product recall - and for legitimate business purposes - such as to gauge customer satisfaction, improve our products or provide you with product information which may be of interest. Toro may share your information with our subsidiaries, affiliates, dealers or other business partners in connection these activities. We may also disclose personal information when required by law or in connection with the sale, purchase or merger of a business. We will never sell your personal information to any other company for marketing purposes.

Retention of your Personal Information

Toro will keep your personal information as long as it is relevant for the above purposes and in accordance with legal requirements. For more information about applicable retention periods please contact legal@toro.com.

Toro's Commitment to Security

Your personal information may be processed in the US or another country which may have less strict data protection laws than your country of residence. Whenever we transfer your information outside of your country of residence, we will take legally required steps to ensure that appropriate safeguards are in place to protect your information and to make sure it is treated securely.

Access and Correction

You may have the right to correct or review your personal data, or object to or restrict the processing of your data. To do so, please contact us by email at legal@toro.com. If you have concerns about the way in which Toro has handled your information, we encourage you to raise this directly with us. Please note that European residents have the right to complain to your Data Protection Authority.

The Toro Warranty

Two-Year or 1,500 Hours Limited Warranty

Conditions and Products Covered

The Toro Company and its affiliate, Toro Warranty Company, pursuant to an agreement between them, jointly warrant your Toro Commercial product ("Product") to be free from defects in materials or workmanship for 2 years or 1,500 operational hours*, whichever occurs first. This warranty is applicable to all products with the exception of Aerators (refer to separate warranty statements for these products). Where a warrantable condition exists, we will repair the Product at no cost to you including diagnostics, labor, parts, and transportation. This warranty begins on the date the Product is delivered to the original retail purchaser.
* Product equipped with an hour meter.

Instructions for Obtaining Warranty Service

You are responsible for notifying the Commercial Products Distributor or Authorized Commercial Products Dealer from whom you purchased the Product as soon as you believe a warrantable condition exists. If you need help locating a Commercial Products Distributor or Authorized Dealer, or if you have questions regarding your warranty rights or responsibilities, you may contact us at:

Toro Commercial Products Service Department
Toro Warranty Company
8111 Lyndale Avenue South
Bloomington, MN 55420-1196

952–888–8801 or 800–952–2740
E-mail: commercial.warranty@toro.com

Owner Responsibilities

As the product owner, you are responsible for required maintenance and adjustments stated in your *Operator's Manual*. Repairs for product issues caused by failure to perform required maintenance and adjustments are not covered under this warranty.

Items and Conditions Not Covered

Not all product failures or malfunctions that occur during the warranty period are defects in materials or workmanship. This warranty does not cover the following:

- Product failures which result from the use of non-Toro replacement parts, or from installation and use of add-on, or modified non-Toro branded accessories and products.
- Product failures which result from failure to perform recommended maintenance and/or adjustments.
- Product failures which result from operating the Product in an abusive, negligent, or reckless manner.
- Parts consumed through use that are not defective. Examples of parts which are consumed, or used up, during normal Product operation include, but are not limited to, brake pads and linings, clutch linings, blades, reels, rollers and bearings (sealed or greasable), bed knives, spark plugs, castor wheels and bearings, tires, filters, belts, and certain sprayer components such as diaphragms, nozzles, flow meters, and check valves.
- Failures caused by outside influence, including, but not limited to, weather, storage practices, contamination, use of unapproved fuels, coolants, lubricants, additives, fertilizers, water, or chemicals.
- Failure or performance issues due to the use of fuels (e.g. gasoline, diesel, or biodiesel) that do not conform to their respective industry standards.
- Normal noise, vibration, wear and tear, and deterioration. Normal "wear and tear" includes, but is not limited to, damage to seats due to wear or abrasion, worn painted surfaces, scratched decals or windows.

Parts

Parts scheduled for replacement as required maintenance are warranted for the period of time up to the scheduled replacement time for that part. Parts replaced under this warranty are covered for the duration of the original product warranty and become the property of Toro. Toro will make the final decision whether to repair any existing part or assembly or replace it. Toro may use remanufactured parts for warranty repairs.

Deep Cycle and Lithium-Ion Battery Warranty

Deep cycle and Lithium-Ion batteries have a specified total number of kilowatt-hours they can deliver during their lifetime. Operating, recharging, and maintenance techniques can extend or reduce total battery life. As the batteries in this product are consumed, the amount of useful work between charging intervals will slowly decrease until the battery is completely worn out. Replacement of worn out batteries, due to normal consumption, is the responsibility of the product owner.
Note: (Lithium-Ion battery only): Refer to the battery warranty for additional information.

Lifetime Crankshaft Warranty (ProStripe 02657 Model Only)

The Prostripe which is fitted with a genuine Toro Friction Disc and Crank-Safe Blade Brake Clutch (integrated Blade Brake Clutch (BBC) + Friction Disc assembly) as original equipment and used by the original purchaser in accordance with recommended operating and maintenance procedures, are covered by a Lifetime Warranty against engine crankshaft bending. Machines fitted with friction washers, Blade Brake Clutch (BBC) units and other such devices are not covered by the Lifetime Crankshaft Warranty.

Maintenance is at Owner's Expense

Engine tune-up, lubrication, cleaning and polishing, replacement of filters, coolant, and completing recommended maintenance are some of the normal services Toro products require that are at the owner's expense.

General Conditions

Repair by an Authorized Toro Distributor or Dealer is your sole remedy under this warranty.

Neither The Toro Company nor Toro Warranty Company is liable for indirect, incidental or consequential damages in connection with the use of the Toro Products covered by this warranty, including any cost or expense of providing substitute equipment or service during reasonable periods of malfunction or non-use pending completion of repairs under this warranty. Except for the Emissions warranty referenced below, if applicable, there is no other express warranty. All implied warranties of merchantability and fitness for use are limited to the duration of this express warranty.

Some states do not allow exclusions of incidental or consequential damages, or limitations on how long an implied warranty lasts, so the above exclusions and limitations may not apply to you. This warranty gives you specific legal rights, and you may also have other rights which vary from state to state.

Note Regarding Emissions Warranty

The Emissions Control System on your Product may be covered by a separate warranty meeting requirements established by the U.S. Environmental Protection Agency (EPA) and/or the California Air Resources Board (CARB). The hour limitations set forth above do not apply to the Emissions Control System Warranty. Refer to the Engine Emission Control Warranty Statement supplied with your product or contained in the engine manufacturer's documentation.

Countries Other than the United States or Canada

Customers who have purchased Toro products exported from the United States or Canada should contact their Toro Distributor (Dealer) to obtain guarantee policies for your country, province, or state. If for any reason you are dissatisfied with your Distributor's service or have difficulty obtaining guarantee information, contact your Authorized Toro Service Center.

California Proposition 65 Warning Information

What is this warning?

You may see a product for sale that has a warning label like the following:



WARNING: Cancer and Reproductive Harm—www.p65Warnings.ca.gov.

What is Prop 65?

Prop 65 applies to any company operating in California, selling products in California, or manufacturing products that may be sold in or brought into California. It mandates that the Governor of California maintain and publish a list of chemicals known to cause cancer, birth defects, and/or other reproductive harm. The list, which is updated annually, includes hundreds of chemicals found in many everyday items. The purpose of Prop 65 is to inform the public about exposure to these chemicals.

Prop 65 does not ban the sale of products containing these chemicals but instead requires warnings on any product, product packaging, or literature with the product. Moreover, a Prop 65 warning does not mean that a product is in violation of any product safety standards or requirements. In fact, the California government has clarified that a Prop 65 warning "is not the same as a regulatory decision that a product is 'safe' or 'unsafe.'" Many of these chemicals have been used in everyday products for years without documented harm. For more information, go to https://oag.ca.gov/prop65/faqs-view-all.

A Prop 65 warning means that a company has either (1) evaluated the exposure and has concluded that it exceeds the "no significant risk level"; or (2) has chosen to provide a warning based on its understanding about the presence of a listed chemical without attempting to evaluate the exposure.

Does this law apply everywhere?

Prop 65 warnings are required under California law only. These warnings are seen throughout California in a wide range of settings, including but not limited to restaurants, grocery stores, hotels, schools, and hospitals, and on a wide variety of products. Additionally, some online and mail order retailers provide Prop 65 warnings on their websites or in catalogs.

How do the California warnings compare to federal limits?

Prop 65 standards are often more stringent than federal and international standards. There are various substances that require a Prop 65 warning at levels that are far lower than federal action limits. For example, the Prop 65 standard for warnings for lead is 0.5 µg/day, which is well below the federal and international standards.

Why don't all similar products carry the warning?

- Products sold in California require Prop 65 labelling while similar products sold elsewhere do not.
- A company involved in a Prop 65 lawsuit reaching a settlement may be required to use Prop 65 warnings for its products, but other companies making similar products may have no such requirement.
- The enforcement of Prop 65 is inconsistent.
- Companies may elect not to provide warnings because they conclude that they are not required to do so under Prop 65; a lack of warnings for a product does not mean that the product is free of listed chemicals at similar levels.

Why does Toro include this warning?

Toro has chosen to provide consumers with as much information as possible so that they can make informed decisions about the products they buy and use. Toro provides warnings in certain cases based on its knowledge of the presence of one or more listed chemicals without evaluating the level of exposure, as not all the listed chemicals provide exposure limit requirements. While the exposure from Toro products may be negligible or well within the "no significant risk" range, out of an abundance of caution, Toro has elected to provide the Prop 65 warnings. Moreover, if Toro does not provide these warnings, it could be sued by the State of California or by private parties seeking to enforce Prop 65 and subject to substantial penalties.