Form No. 3466-364 Rev C

42in or 54in Bagger
eTimeCutter™ Riding Mower

Model No. 79841—Serial No. 400000000 and Up

Model No. 79851—Serial No. 400000000 and Up

Operator's Manual

Introduction

Read this information carefully to learn how to operate and maintain your product properly and to avoid injury and product damage. You are responsible for operating the product properly and safely.

Whenever you need service, genuine parts, or additional information, contact an Authorized Service Dealer or Customer Service and have the model and serial numbers of your product ready. Figure 1 identifies the location of the model and serial numbers on the product. Write the numbers in the space provided.

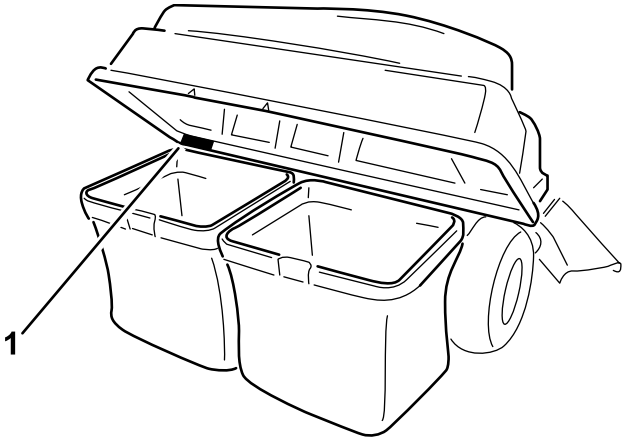

g466960

Figure 1

1. Model and serial number location

Model No. _____

Serial No. _____

This manual uses 2 words to highlight information. **Important** calls attention to special mechanical information and **Note** emphasizes general information worthy of special attention.

The safety-alert symbol (Figure 2) appears both in this manual and on the machine to identify important safety messages that you must follow to avoid accidents. This symbol will appear with the word **Danger**, **Warning**, or **Caution**.

- **Danger** indicates an imminently hazardous situation which, if not avoided, **will** result in death or serious injury.
- **Warning** indicates a potentially hazardous situation which, if not avoided, **could** result in death or serious injury.
- **Caution** indicates a potentially hazardous situation which, if not avoided, **may** result in minor or moderate injury.



sa-black

Figure 2

1. Safety-alert symbol

© 2024—The Toro® Company
8111 Lyndale Avenue South
Bloomington, MN 55420

Register at www.Toro.com.

Original Instructions (EN)
Printed in the USA
All Rights Reserved

3466-364

⚠ WARNING

CALIFORNIA
Proposition 65 Warning

Use of this product may cause exposure to chemicals known to the State of California to cause cancer, birth defects, or other reproductive harm.

Contents

Introduction 1
Safety 2
Safety and Instructional Decals 3
Setup 4
1 Preparing the Machine 5
2 Removing the Guards 5
3 Installing the Weights 6
4 Installing the Guards 14
5 Installing the Lower Bagger Mount and Pivot Frame 15
6 Installing the Hood Rod 20
7 Assembling the Bagger Top 20
8 Installing the Bagger Top Assembly 20
9 Installing the Baffle (54in Decks Only) 22
10 Installing the Blades 23
11 Installing the Chute 23
12 Connecting with the Discharge Tube 26
Operation 26
Emptying the Grass Bags 26
Clearing Obstructions from the Bagger 27
Removing the Bagger 28
Operating Tips 28
Maintenance 30
Recommended Maintenance Schedule(s) 30
Inspecting the Bagger Attachment 30
Inspecting the Mower Blades 30
Cleaning the Bagger Attachment 30
Storage 31
Storing the Bagger Attachment 31

Safety

- Become familiar with the safe operation of the equipment, with the operator controls, and safety signs.
- Use extra care with grass catchers or other attachments. These can change the operating characteristics and the stability of the machine.
- Follow the manufacturer's recommendations for adding or removing wheel weights or counterweights to improve stability.
- Do not use a grass catcher on steep slopes. A heavy grass catcher could cause loss of control or overturn the machine.
- Slow down and use extra care on hillsides. Be sure to travel in the recommended direction on hillsides. Turf conditions can affect the stability of the machine. Use extreme caution while operating near drop-offs.
- Keep all movement on slopes slow and gradual. Do not make sudden changes in speed, direction, or turning.
- The grass catcher can obstruct the view to the rear. Use extra care when operating in reverse.
- Use care when loading or unloading the machine into a trailer or truck.
- Never operate with the discharge deflector raised, removed or altered, unless using a grass catcher.
- Keep hands and feet away from moving parts. Do not make adjustments with the machine running.
- Park the machine on level ground, disengage the drives, and shut off the machine before leaving the operator's position for any reason including emptying the grass catcher or unclogging the chute.
- If you remove the grass catcher, be sure to install any discharge deflector or guard that might have been removed to install the grass catcher. Do not operate the mower without either the entire grass catcher or the grass deflector in place.
- Do not leave grass in the grass catcher for extended periods of time.
- Grass catcher components are subject to wear, damage and deterioration, which could expose you to moving parts or allow objects to be thrown. Frequently check components and replace with the manufacturer's recommended parts, when necessary.
- Do not use the machine as a towing vehicle.

Safety and Instructional Decals

Safety decals and instructions are easily visible to the operator and are located near any area of potential danger. Replace any decal that is damaged or missing.

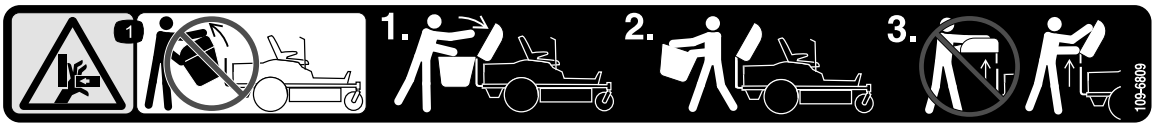

decal109-6809

109-6809

1. Crushing hazard of hand—do not remove the whole bagger from the machine; open the bagger top and then remove the bag(s) from the bagger. Do not remove the bagger top when it is closed; open the bagger top and then remove it.

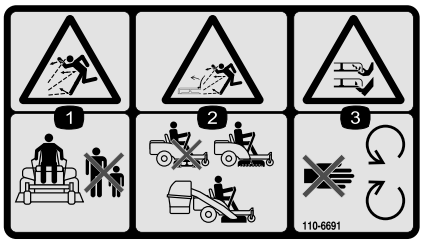

decal110-6691

110-6691

1. Thrown object hazard—keep bystanders away.
2. Thrown object hazard, mower—do not operate without the deflector, discharge cover, or grass collection system in place.
3. Cutting/dismemberment hazard of hand or foot—stay away from moving parts.



decal133-8061

133-8061

Setup

Loose Parts

Use the chart below to verify that all parts have been shipped.

Procedure	Description	Qty.	Use
1	No parts required	–	Prepare the machine.
2	No parts required	–	Remove the guards (machines equipped with MyRide only).
3	Left weight-mounting bracket Right weight-mounting bracket Hex-head flange bolt (3/8 x 1 inch) Locknut (3/8 inch) Bagger weight Washer Bolt (3/8 x 2-3/4 inches)	1 1 4 6 6 2 2	Install the weights.
4	No parts required	–	Install the guards (machines equipped with MyRide only).
5	Lower bagger mount Hex-head flange bolt (5/16 x 1 inch) Hex-flange nut (5/16 inch) Hex-washer-head thread forming screws (1/4 x 3/4 inch) Pivot frame assembly Clevis pin Hairpin Support rod Flat washer (1/2 inch)	1 4 4 4 1 1 3 2 2	Install the lower bagger mount and pivot frame.
6	Hood rod Hairpin	1 1	Install the hood rod.
7	Bagger top Bagger screen	1 1	Assemble the bagger top.
8	Rubber latch Plastic screw Plain washer Bagger top assembly Hopper bracket Carriage bolt (5/16 inch x 1 inch) Hex-flange nuts (5/16 inch) Bag assembly Bagger tube	1 2 2 1 2 4 4 2 1	Install the bagger top assembly.
9	Cutoff Baffle	1	Install the baffles (54in decks only).
10	Blade (21-5/8 inches – 42in decks only) Blade (18-3/4 inches – 54in decks only)	2 3	Install the blades.
11	Chute	1	Install the chute.
12	No parts required	–	Connect with the discharge tube.

Note: Determine the left and right sides of the machine from the normal operating position.

Contact an Authorized Service Dealer for installation assistance.

1

Preparing the Machine

No Parts Required

Procedure

1. Park the machine on a level surface.
2. Disengage the blade-control switch.
3. Move the motion-control levers outward to the NEUTRAL position.
4. Engage the parking brake.
5. Shut off the machine and remove the key.
6. Wait for all moving parts to stop.
7. Allow machine components to cool.
8. Remove the battery packs from the machine.

2

Removing the Guards

Machines Equipped with MyRide® Only

No Parts Required

Procedure

Note: Retain all removed parts for later installation.

1. Remove the bolts securing the guards on the sides of the frame.
2. Remove the guards on both sides of the frame (Figure 3).

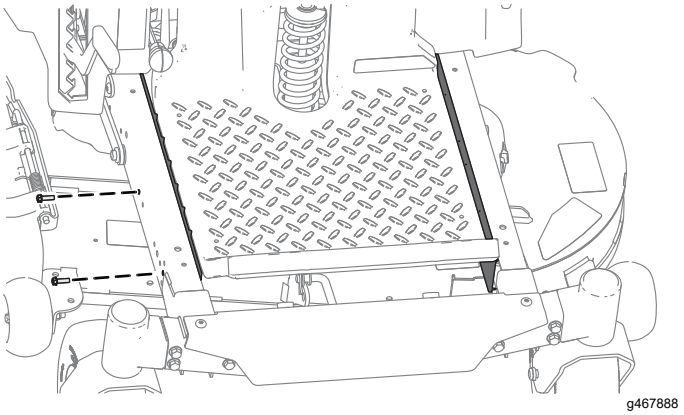

g467888

Figure 3

3

Installing the Weights

Parts needed for this procedure:

1	Left weight-mounting bracket
1	Right weight-mounting bracket
4	Hex-head flange bolt (3/8 x 1 inch)
6	Locknut (3/8 inch)
6	Bagger weight
2	Washer
2	Bolt (3/8 x 2-3/4 inches)

Procedure

Note: Retain all removed parts for later installation.

⚠ CAUTION

The bagger changes the weight distribution of the machine. Operating the machine without the front weights may cause an unstable condition, which could result in a loss of control.

Ensure the front weights are properly installed before operating the machine with the bagger attachment.

1. On the left side of the machine, remove the parking brake cover by removing the 2 shoulder screws (1/4 x 1/2 inch).

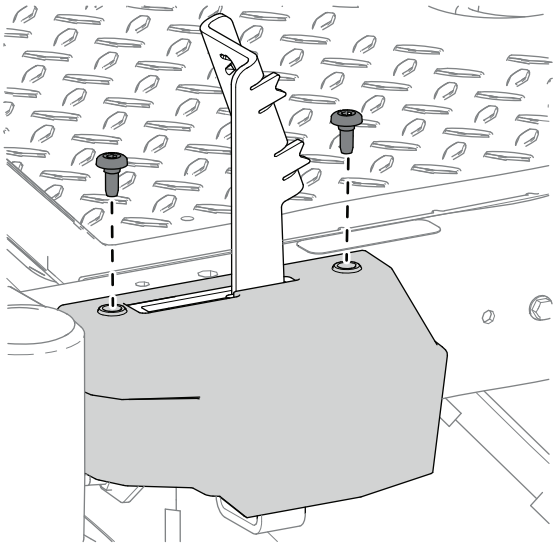

g466921

Figure 4

2. Remove the shoulder screw (1/4 inch) that secures the brake cable to the brake pedal.

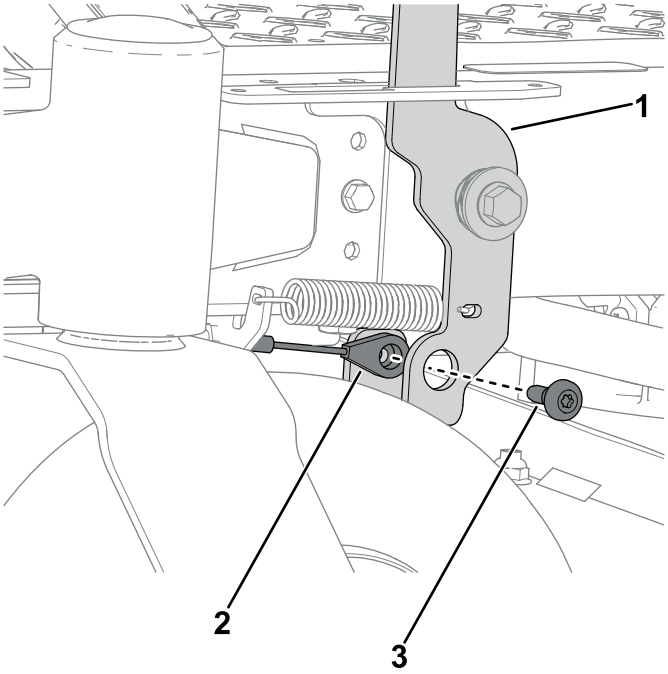

g466922

Figure 5

1. Brake pedal
2. Brake cable
3. Shoulder screw (1/4 inch)

3. Loosen the nut on the brake cable and remove it from the bracket by pulling the cable forward and out of the slot, as shown below.

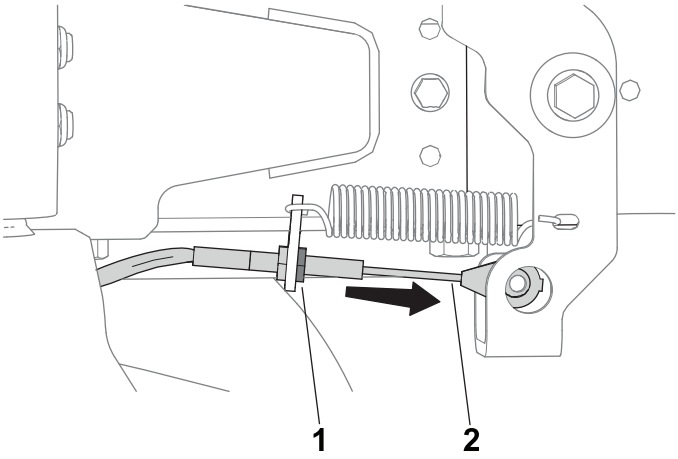

g466923

Figure 6

1. Nut
2. Brake cable

4. Remove the pedal return spring from the brake pedal and brake pedal bracket.

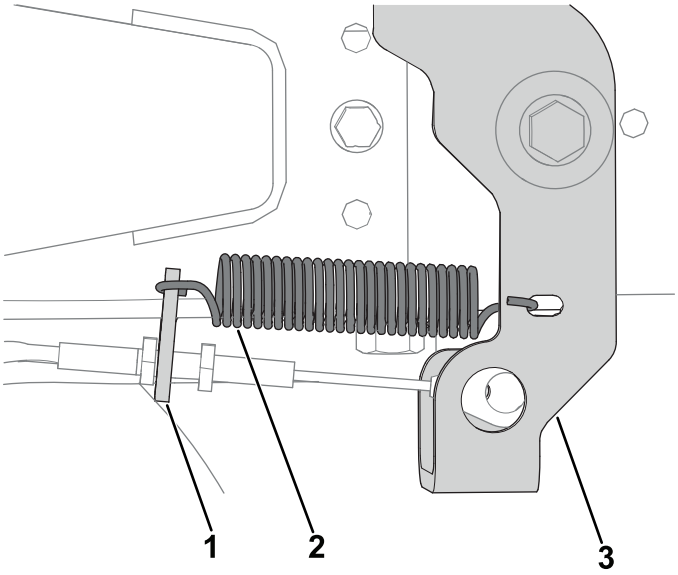

g466928

Figure 7

1. Brake pedal bracket
2. Pedal return spring
3. Brake pedal

5. Remove the hex-head flange bolt (5/16 x 2 inches), pivot washer, wave washer, flange bushing, and hex-flange nut (5/16 inch) that secure the brake pedal to the brake pedal bracket.

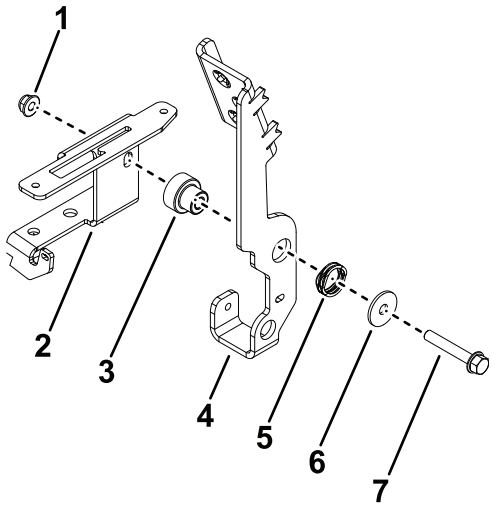

g466929

Figure 8

1. Hex-flange nut (5/16 inch)
2. Brake pedal bracket
3. Flange bushing
4. Brake pedal
5. Wave washer
6. Pivot washer
7. Hex-head flange bolt (5/16 x 2 inches)

6. Remove the button-head screw (5/16 x 3/4 inch) that secures the brake pedal bracket to the frame rail.

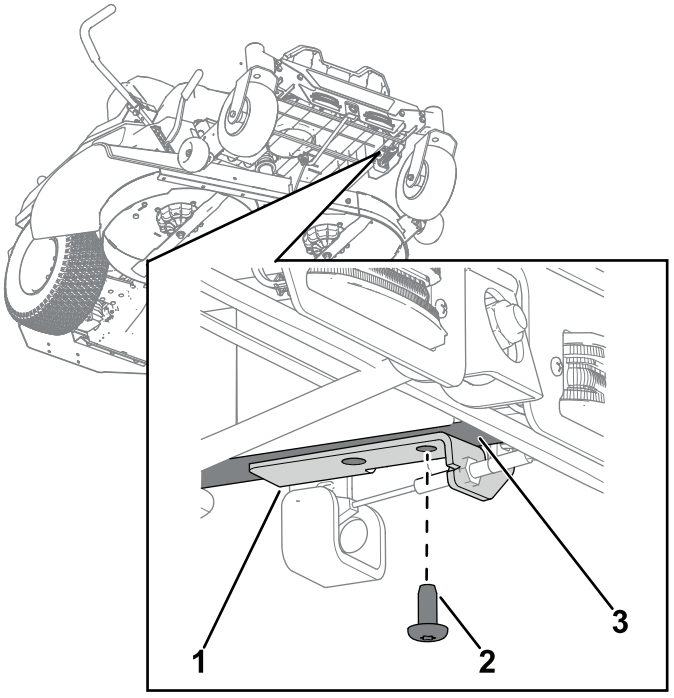

g466483

Figure 9

1. Brake pedal bracket
2. Button-head screw (5/16 x 3/4 inch)
3. Frame rail

7. Slide the left weight-mounting bracket between the brake pedal bracket and frame rail. Secure the brackets with the 2 hex-head flange bolts (3/8 x 1 inch), 2 locknuts (3/8 inch), and previously removed button-head screw (5/16 x 3/4 inch).

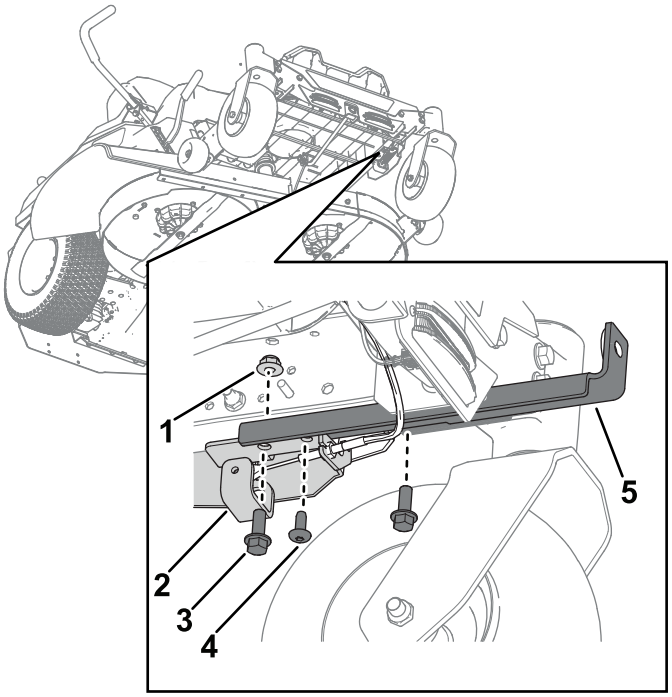

g466959

Figure 10

1. Locknut (3/8 inch)
2. Brake pedal bracket
3. Hex-head flange bolt (3/8 x 1 inch)
4. Button-head screw (5/16 x 3/4 inch)
5. Left-weight mounting bracket

8. Install the right weight-mounting brackets to the under side of the frame using 2 hex-head flange bolts (3/8 x 1 inch), and 2 locknuts (3/8 inch).

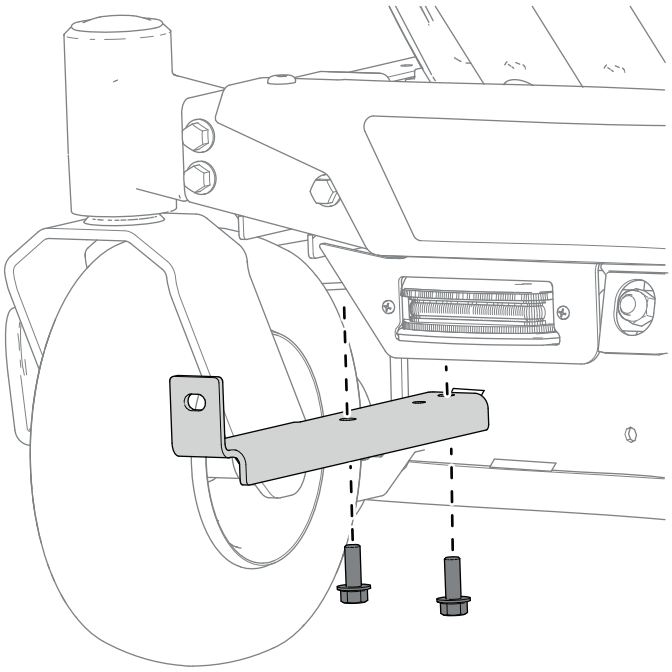

g466486

Figure 11

9. Install the hex-head flange bolt (5/16 x 2 inches), pivot washer, wave washer, flange bushing, and hex-flange nut (5/16 inch) that secure the brake pedal to the brake pedal bracket.

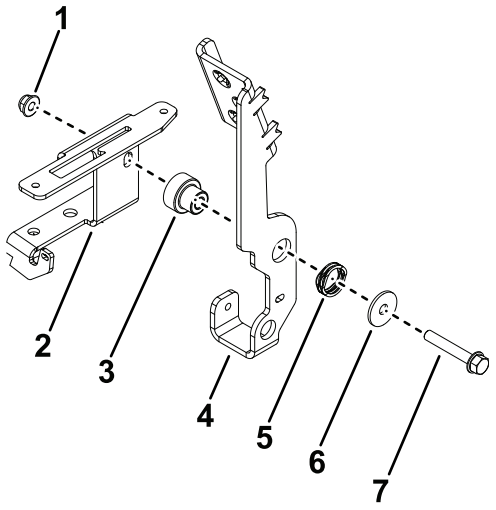

g466929

Figure 12

1. Hex-flange nut (5/16 inch)
2. Brake pedal bracket
3. Flange bushing
4. Brake pedal
5. Wave washer
6. Pivot washer
7. Hex-head flange bolt (5/16 x 2 inches)

10. Install the pedal return spring to the brake pedal and brake pedal bracket.

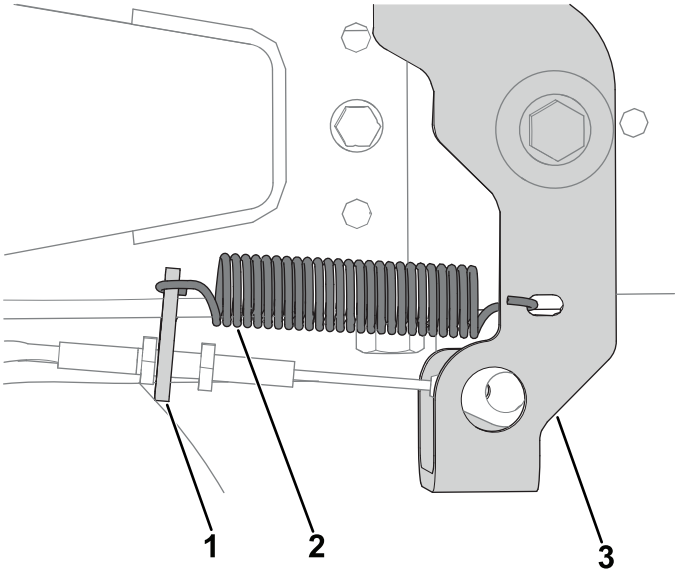

g466928

Figure 13

1. Brake pedal bracket
2. Pedal return spring
3. Brake pedal

11. Install the shoulder screw (1/4 inch) that secures the brake cable to the brake pedal.

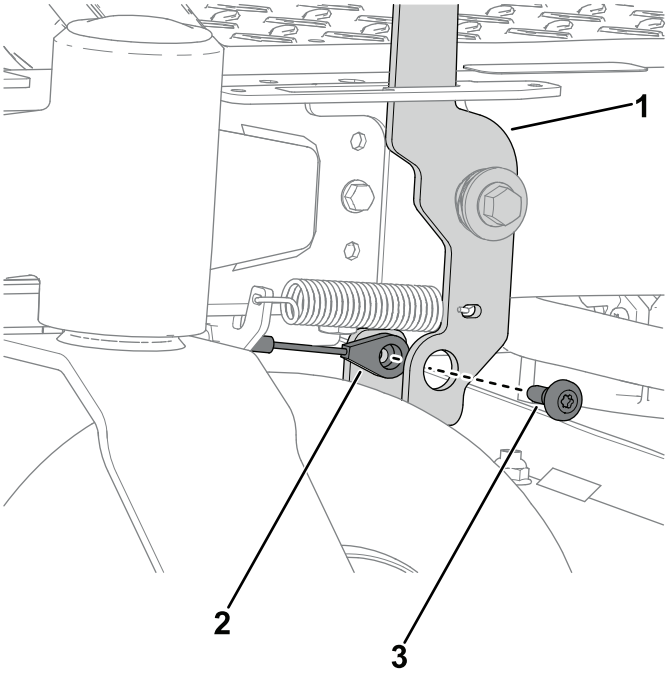

g466922

Figure 14

1. Brake pedal
2. Brake cable
3. Shoulder screw (1/4 inch)

12. On the brake cable, set the cable length by pulling the cable hand tight while tightening the nuts.
13. Install the parking brake cover by installing the 2 shoulder screws (1/4 x 1/2 inch).

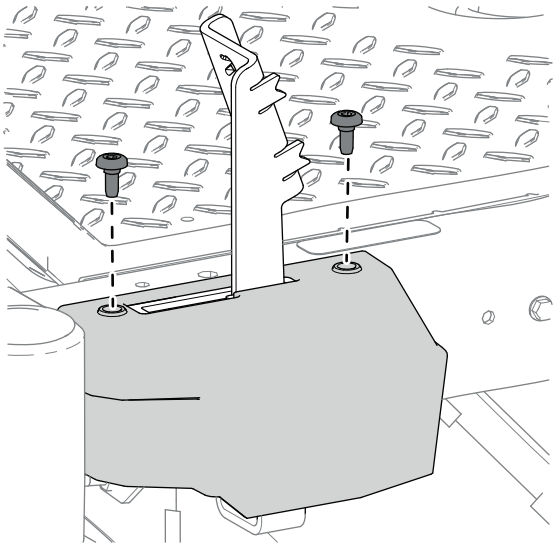

g466921

Figure 15

14. Install the suitcase weights (amount determined by deck size) to the weight-mounting brackets using 2 bolts (3/8 x 2-3/4 inches), 2 washers, and 2 locknuts (3/8 inch) as shown below.
    - 42 inch decks: install 6 weights.
    - 54 inch decks: install 5 weights.

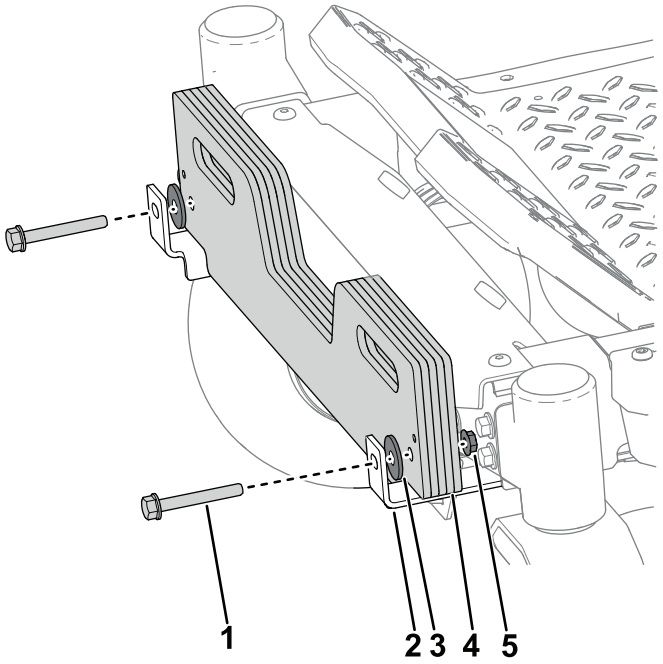

g466487

Figure 16

1. Bolt (3/8 x 2-3/4 inches)
2. Weight-mounting bracket
3. Washer
4. Suitcase weight
5. Locknut (3/8 inch)

15. Once you have installed the weights and brackets, ensure that all the fasteners are tight. Tighten as necessary.

    Important: **Whenever you remove the bagger attachment, remember to remove the front weights to return the proper stability to the machine.**

4

Installing the Guards

Machines Equipped with MyRide Only

No Parts Required

Procedure

1. Insert the top of the guard under the deck; tilt the guard so that it slides under the frame and fit the guard into the notches (Figure 17).

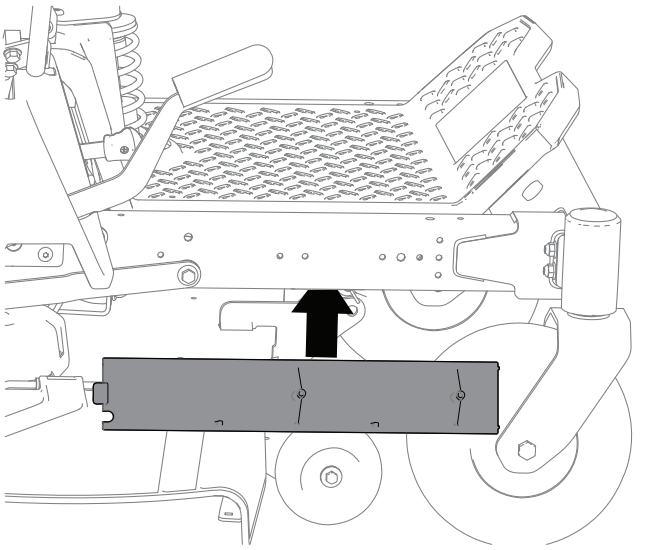

g308505

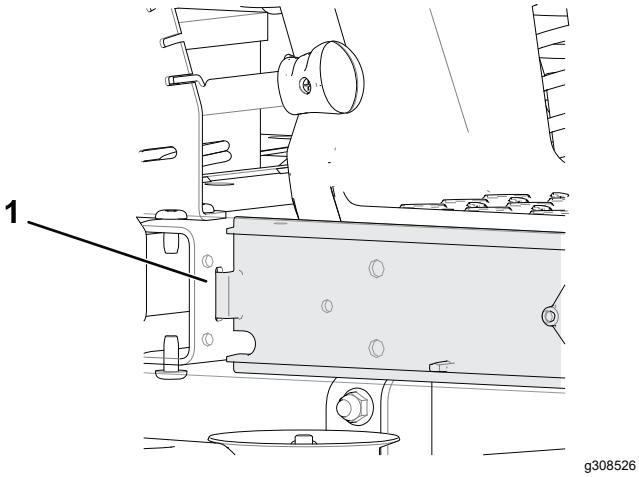

g308526

Figure 17

1. Notch

2. Secure the guards to the frame using the bolts removed in 2 Removing the Guards (page 5).

5

Installing the Lower Bagger Mount and Pivot Frame

Parts needed for this procedure:

1	Lower bagger mount
4	Hex-head flange bolt (5/16 x 1 inch)
4	Hex-flange nut (5/16 inch)
4	Hex-washer-head thread forming screws (1/4 x 3/4 inch)
1	Pivot frame assembly
1	Clevis pin
3	Hairpin
2	Support rod
2	Flat washer (1/2 inch)

Procedure

1. On each side of the machine, remove the 3 button-head screws (5/16 x 3/4 inch) that secure the rear guard to the frame rail.

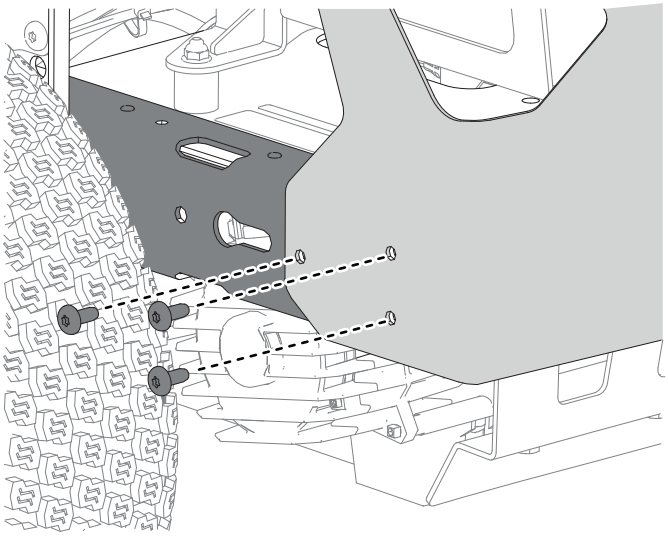

g466961

Figure 18

2. On the backside of the machine, install the lower bagger mount to the rear guard using the 4 hex-head flange bolts (5/16 x 1 inch) and 4 hex-flange nuts (5/16 inch).

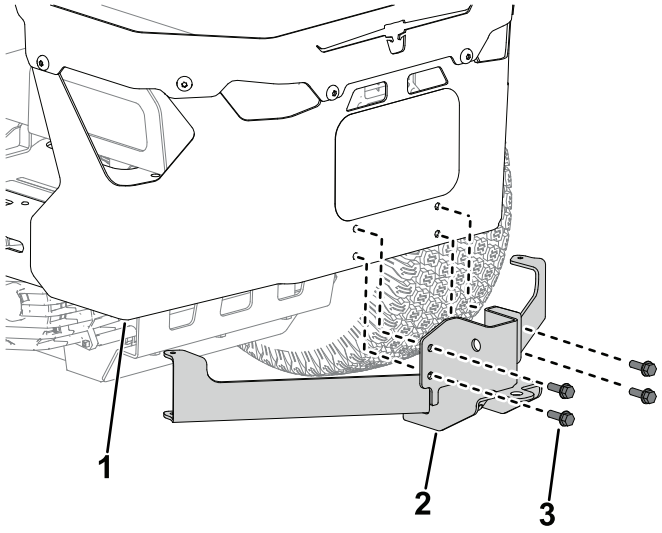

g466498

Figure 19

1. Rear guard
2. Lower bagger mount
3. Hex-head flange bolt (5/16 x 1 inch)

3. On the lower backside of the machine, install the bagger support to the frame rails using the 4 hex-washer-head thread forming screws (1/4 x 3/4 inch).

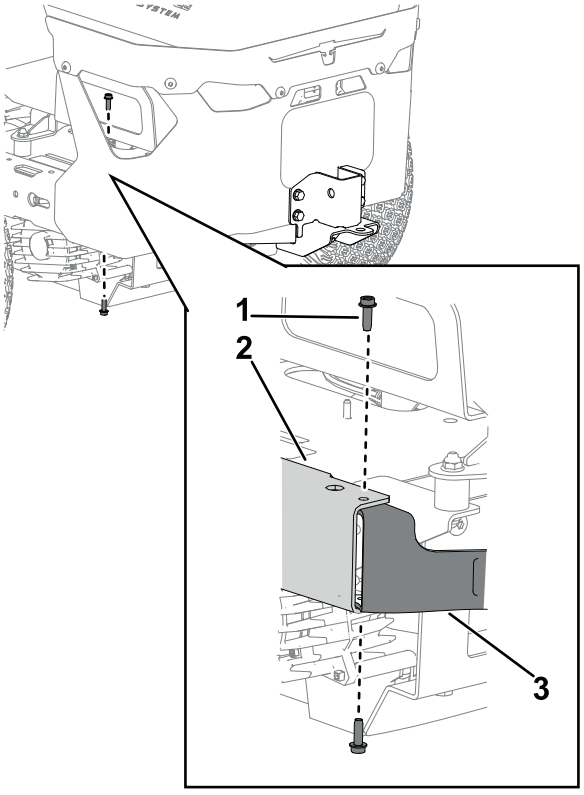

g466531

Figure 20

1. Hex-washer-head thread forming screws (1/4 x 3/4 inch)
2. Frame rail
3. Bagger support

4. On each side of the machine, install the 3 button-head screws (5/16 x 3/4 inch) that secure the rear guard to the frame rail.

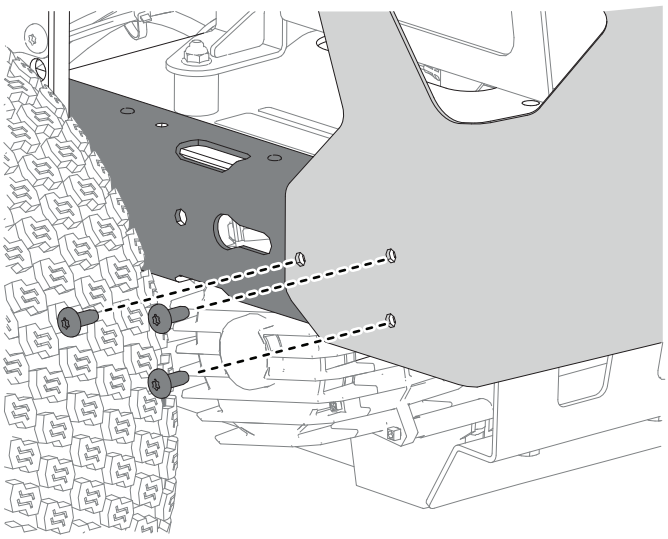

g466961

Figure 21

5. Insert the pivot frame assembly into the lower bag mount and secure it with the clevis and hairpin.

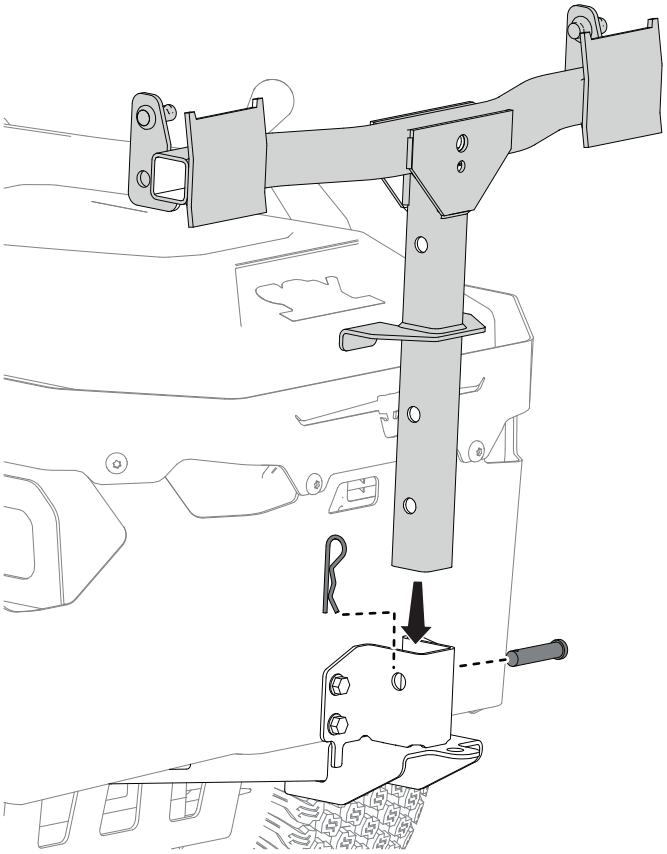

g466542

Figure 22

6. Install the flared end of a support rod into the keyed slot in the side of the machine frame, and move the rod rearward to seat it in the frame.

   Note: Complete this step on both sides of the machine.

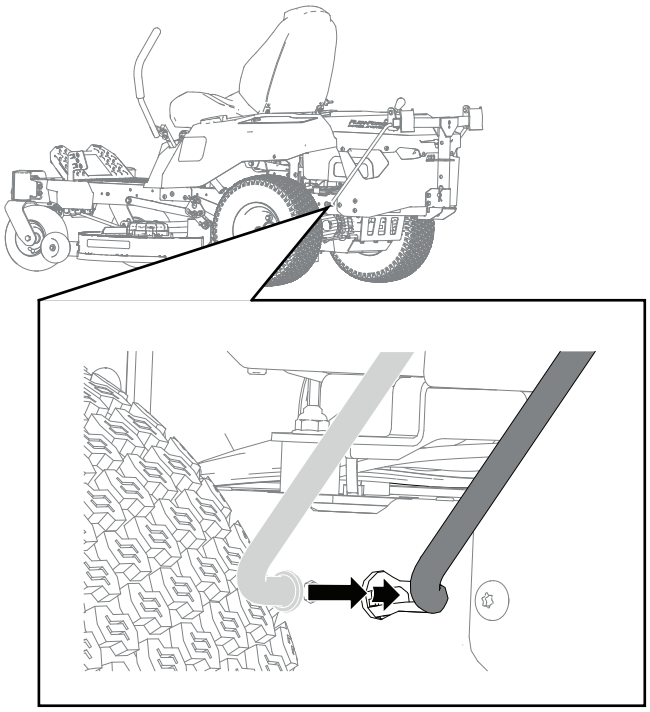

g466549

Figure 23

7. Attach the support rod to the pivot frame using a flat washer (1/2 inch) and hairpin.

   Note: Complete this step on both sides of the machine.

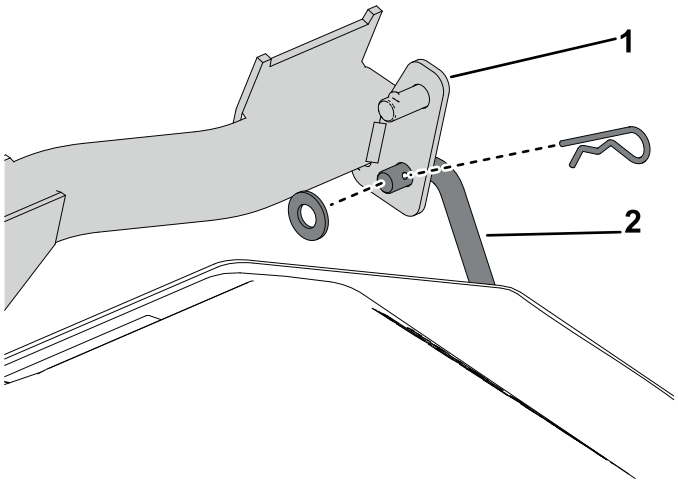

g466606

Figure 24

1. Pivot frame
2. Support rod

6

Installing the Hood Rod

Parts needed for this procedure:

1	Hood rod
1	Hairpin

Procedure

Install the hood rod with a hairpin.

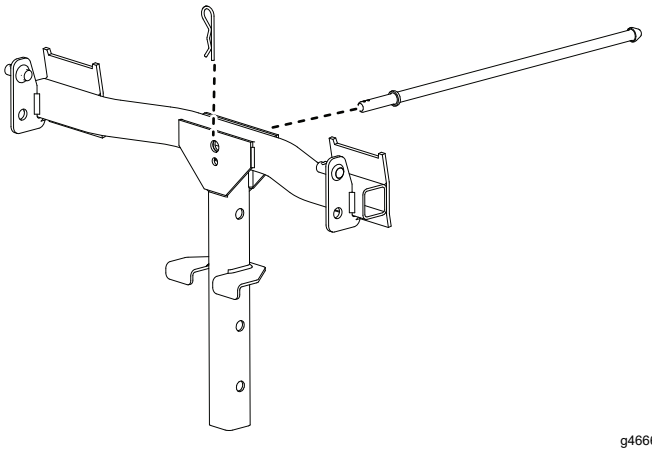

g466639

Figure 25

7

Assembling the Bagger Top

Parts needed for this procedure:

1	Bagger top
1	Bagger screen

Procedure

1. Turn the bagger top over.
2. Install the screen as shown in Figure 26 and that it slopes down toward the collection bags.

   Note: Make sure that the screens snap into place and the tabs engage the bagger top.

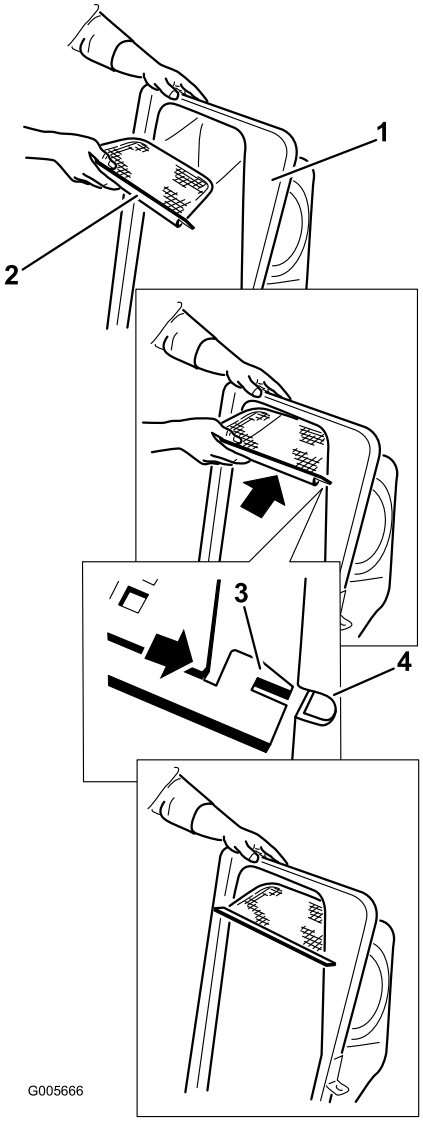

g005666

Figure 26

1. Bagger top
2. Screen
3. Screen tab
4. Slot in bagger top

8

Installing the Bagger Top Assembly

Parts needed for this procedure:

1	Rubber latch
2	Plastic screw
2	Plain washer
1	Bagger top assembly
2	Hopper bracket
4	Carriage bolt (5/16 inch x 1 inch)
4	Hex-flange nuts (5/16 inch)
2	Bag assembly
1	Bagger tube

Procedure

1. Install the bagger top to the bagger frame.
2. Snap the 2 bag frames to the 2 grass bag assemblies.

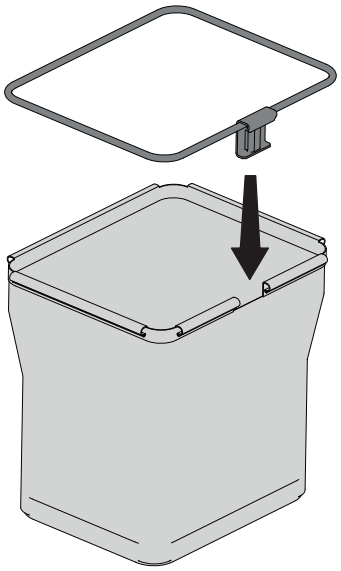

g453040

Figure 27

3. Lift the bagger top and install the bags by sliding the bag frame hooks onto the retaining brackets.

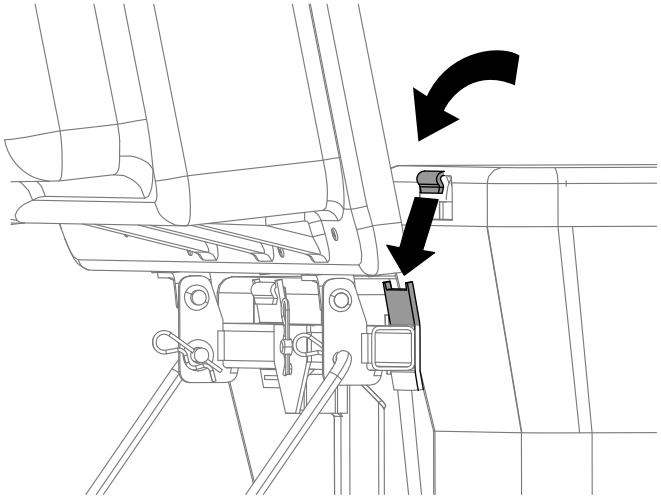

g300378

Figure 28

4. Lower the bagger top onto the bags.

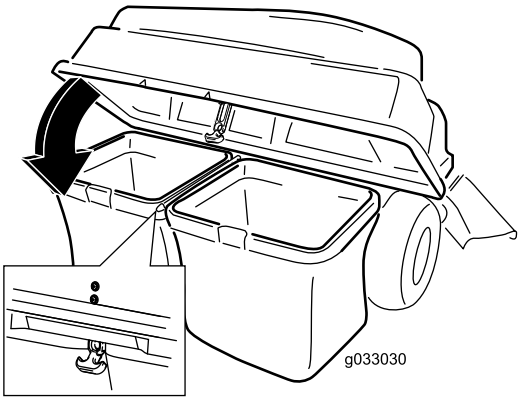

g033030

Figure 29

5. Attach the bagger hood strap to the latch rod.
6. Install the upper bagger tube by inserting the curved end into the opening in the bagger top.

   Note: Ensure that the flared end with the retention post is pointing down and forward in preparation to be mated with the lower chute.

9

Installing the Baffle (54in Decks Only)

Parts needed for this procedure:

1	Cutoff Baffle

Procedure

1. Remove the existing baffle from the machine.

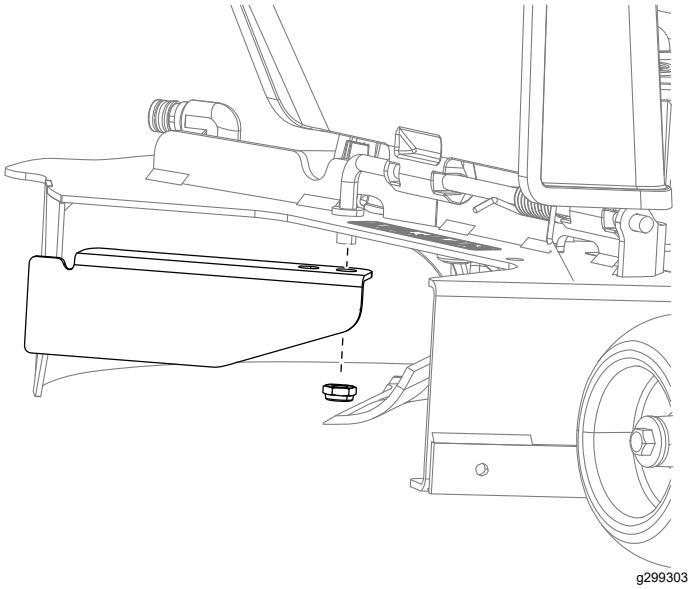

Figure 30

2. Install the new small baffle to the mower deck at the same location as the previously removed baffle.

   Note: Use the existing fasteners secure the new small baffle to the mower deck.

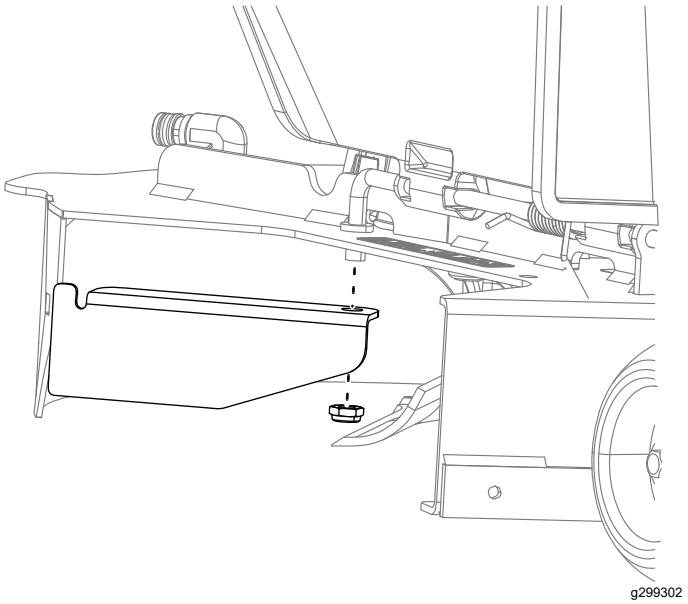

Figure 31

3. Rotate the bagging cutoff baffle to contact the rear edge of the deck.

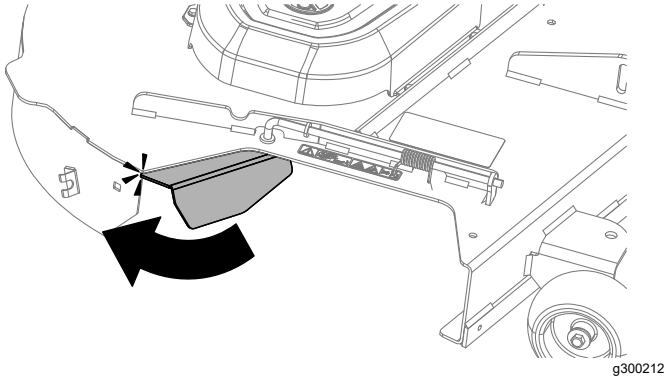

Figure 32

10

Installing the Blades

Parts needed for this procedure:

2	Blade (21-5/8 inches – 42in decks only)
3	Blade (18-3/4 inches – 54in decks only)

Procedure

1. Raise the deck to the highest height-of-cut position.

⚠ WARNING

Supporting the machine on the transaxle or motor may damage them and cause the machine to fall, injuring you or bystanders.

Do not use the transaxle or motor to lift or support the machine.

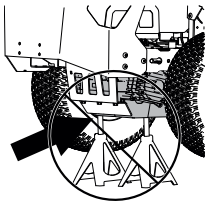

g454948

Figure 33

⚠ WARNING

Mechanical or hydraulic jacks may fail to support the machine and cause serious injury.

Use jack stands when supporting the machine.

2. Use jackstands to raise and support the machine.

⚠ WARNING

The blades are sharp. Contact with a sharp blade can cause serious personal injury.

Wear gloves or wrap the sharp edges of the blade with a rag.

3. Hold the blade end using a rag or thickly padded glove.

4. Remove the blades as shown below. Retain the blade drivers and blade bolts.

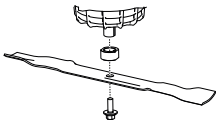

g448104

Figure 34

5. Install the new blades using the retained blade drivers and blade bolts.

Note: The curved part of the blade must be pointing upwards toward the inside of the mower to ensure proper cutting.

- 42 inch decks: install 2 blades (21-5/8 inches)
- 54 inch decks: install 3 blades (18-3/4 inches)

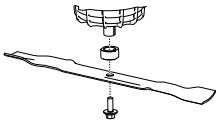

g448104

Figure 35

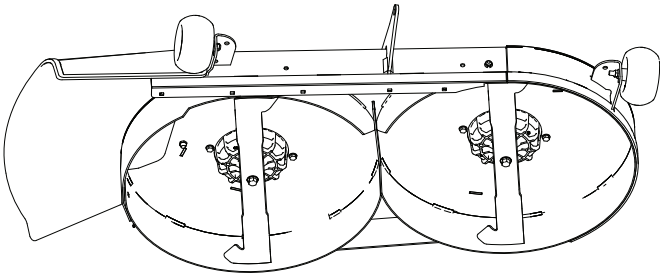

g466774

Figure 36
42 inch Deck

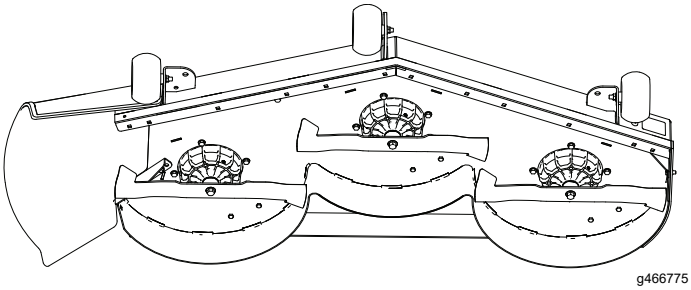

g466775

Figure 37
54 inch Deck

6. Torque the blade bolts to 81 to 108 N·m (60 to 80 ft-lb).

7. Lower the machine to the ground.

11

Installing the Chute

Parts needed for this procedure:

1	Chute

Installing the Chute on a 42 inch Deck

1. Tilt the chute and install the pin into the hole on the mower deck.

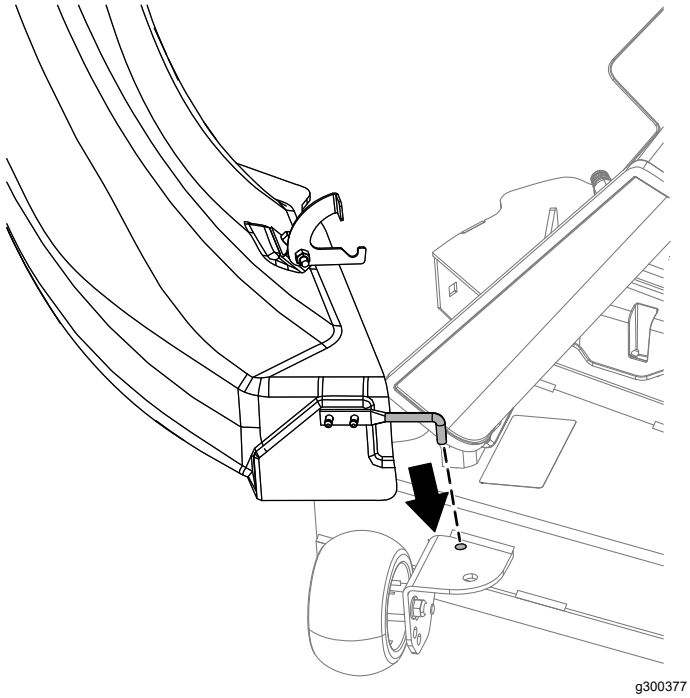

g300377

Figure 38

2. Pivot the chute back and toward the deck so the chute is flush with the mower deck.

   Note: Ensure that the retaining hook on the chute is out of the way so the chute opening mounts flush to the deck.

3. On the top of the chute, engage the hook-shaped latch around the pivot rod of the deflector assembly and install the rod into the hole on the mower deck).

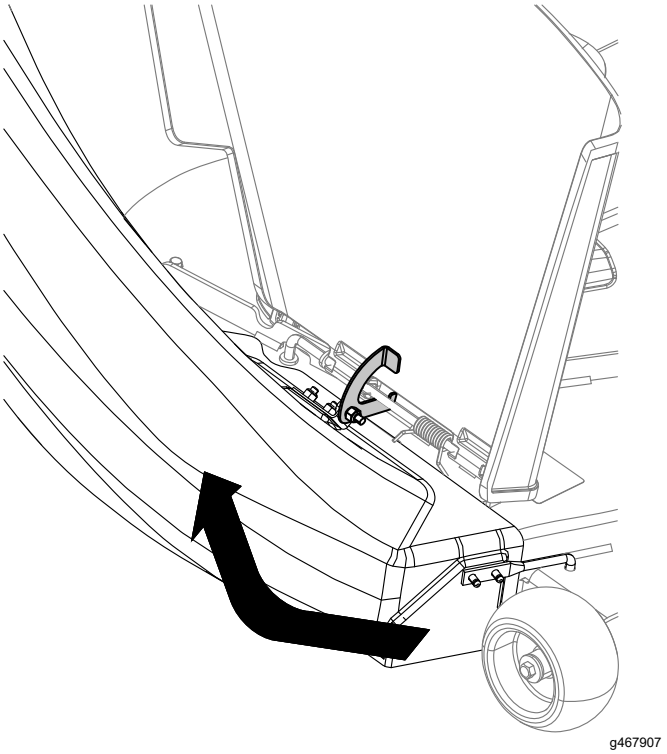

g467907

Figure 39

4. Hook the flexible latch on the chute to the retaining clasp welded on the mower deck.

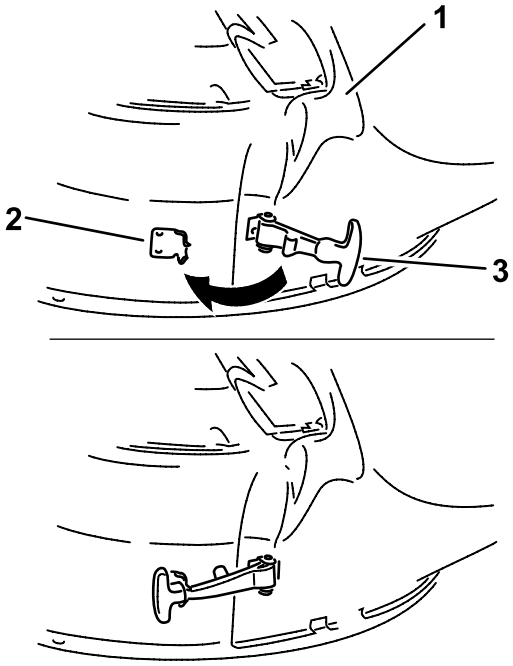

g299268

Figure 40

1. Chute
2. Retaining clasp
3. Flexible latch

Installing the Chute on a 54 inch Deck

1. Tilt the chute and install the pin into the hole on the mower deck.

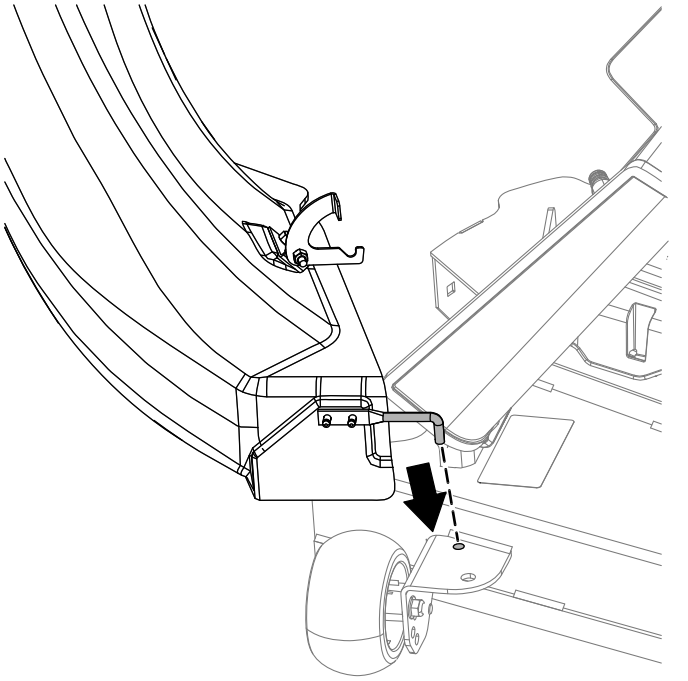

g300377

Figure 41

2. Pivot the chute back and toward the deck so the chute is flush with the mower deck.

   Note: Ensure that the retaining hook on the cute is out of the way so the chute opening mounts flush to the deck.

3. On the top of the chute, engage the hook-shaped latch around the pivot rod of the deflector assembly and install the rod into the hole on the mower deck

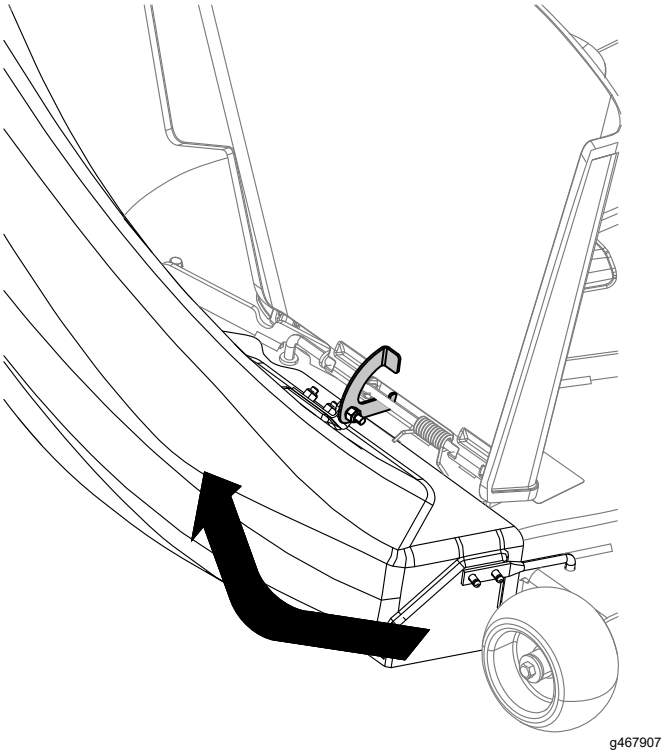

g467907

Figure 42

4. Hook the flexible latch on the chute to the retaining clasp welded on the mower deck.

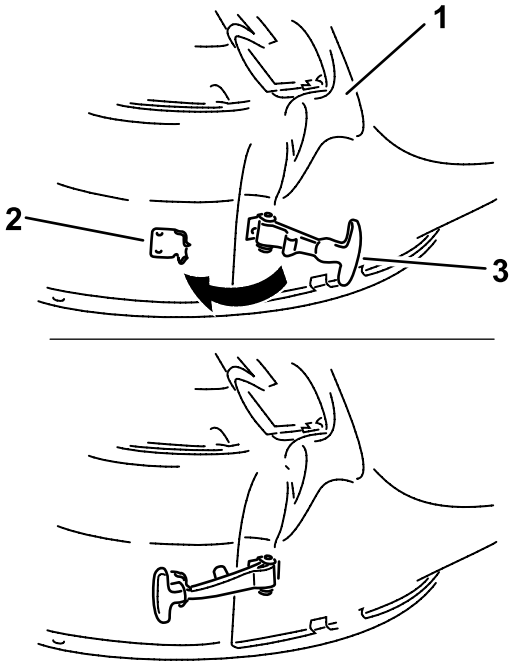

g299268

Figure 43

1. Chute
2. Retaining clasp
3. Flexible latch

12

Connecting with the Discharge Tube

No Parts Required

Procedure

1. Slide the curved end of the discharge tube into the opening in the bagger top.

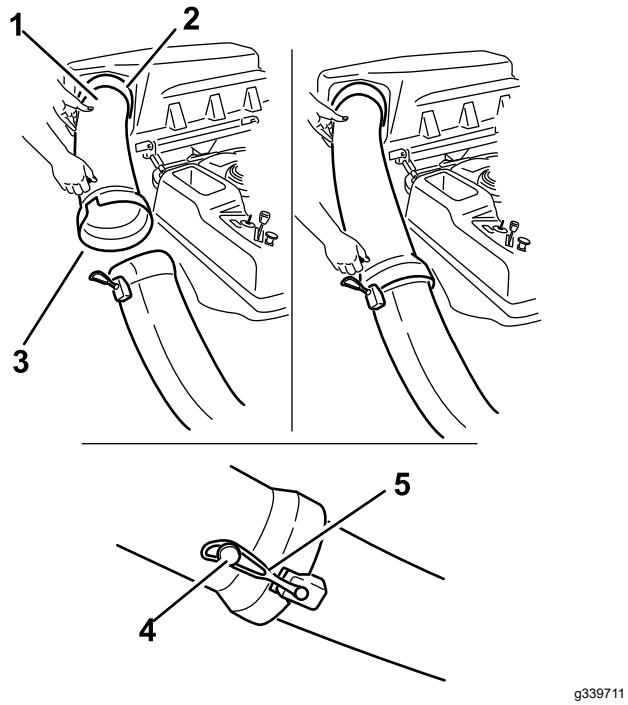

Figure 44

1. Discharge tube, curved end
2. Opening in bagger top
3. Discharge tube, flared end
4. Peg
5. Rubber strap

2. Slide the flared end of the discharge tube over the end of the chute. Move the rubber retaining strap on the chute snaps over the peg on the discharge tube to secure it.
3. After the bagger installation, install the batteries.

Operation

Note: Determine the left and right sides of the machine from the normal operating position.

⚠ WARNING

To avoid personal injury, follow these procedures:

- **Become familiar with all operating and safety instructions in the *Operator's Manual* for the mower before using this attachment.**
- **Never remove the discharge tube, bags, bagger top, or the chute while the machine is running.**
- **Always shut off the machine and wait for all moving parts to stop before clearing an obstruction from the bagging system.**
- **Never do maintenance or repairs while the machine is running.**

⚠ WARNING

Without the grass deflector, bagger tubes or complete bagger assembly mounted in place, you and others are exposed to blade contact and thrown debris. Contact with the rotating mower blade(s) and thrown debris will cause injury or death.

- **Always install the grass deflector when removing the bagger and changing to side discharge mode.**
- **If the grass deflector is ever damaged, replace it immediately. The grass deflector routes material down toward the turf.**
- **Never put your hands or feet under the mower.**
- **Never try to clear the discharge area or mower blades unless you move the power take off (PTO) to off and turn the key to the OFF position.**
- **Turn off the machine before unclogging the discharge chute.**

Emptying the Grass Bags

Be careful when lifting or handling a grass bag that is full. To empty the grass bags:

1. Park the machine on a level surface and disengage the PTO switch.

2. Move the motion control levers outward to the neutral lock position, shut off the machine, remove the key, set the parking brake and wait for all moving parts to stop before leaving the operating position.
3. Open (raise) the bagger top (Figure 45).

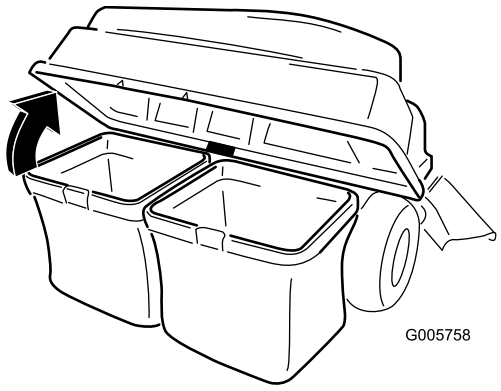

g005758

Figure 45

4. Compress debris into the bags. With both hands, lift up on the bag and unhook it from the retaining bracket. Empty the bag. Repeat the procedure for the other bag.

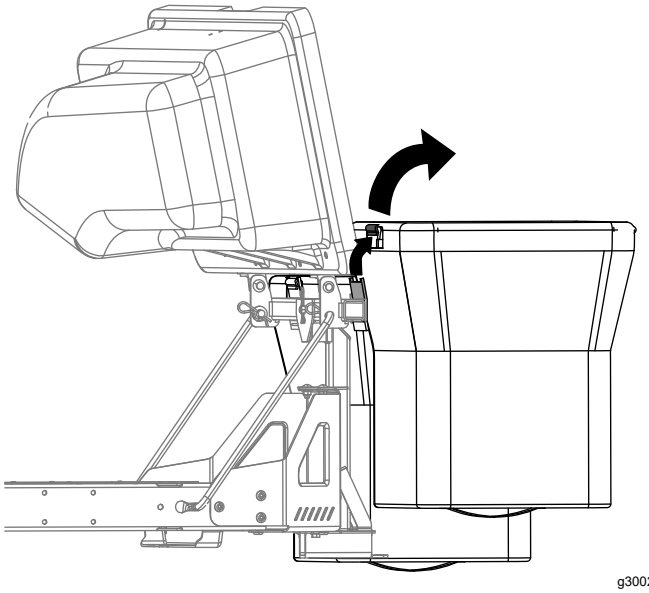

g300218

Figure 46

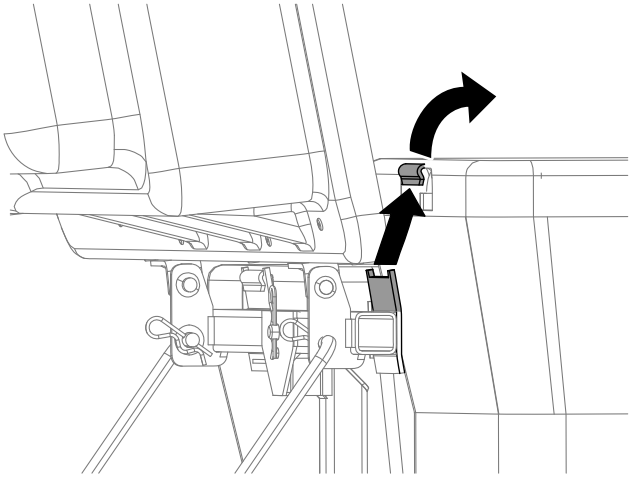

g300217

Figure 47

5. Install the bags by sliding the bag frame hooks onto the retaining brackets.
6. Lower the bagger top onto the bags.
7. Attach the bagger hood strap to the latch rod.

Clearing Obstructions from the Bagger

⚠ WARNING

When the bagger is in operation, the blades are rotating and can cut off or injure hands and fingers.

- **Before adjusting, cleaning, repairing and inspecting the machine, and before unclogging the chute, shut off the machine and wait for all moving parts to stop. Remove the key.**
- **Use a stick or similar object, not your hands, to remove an obstruction from the machine and tube.**
- **Keep your face, hands, feet, and any other part of your body or clothing away from concealed, moving, or rotating parts.**

1. Park the machine on a level surface and disengage the blade control switch.
2. Move the motion control levers outward to the neutral lock position, stop the machine, remove the key, set the parking brake and wait for all moving parts to stop before leaving the operating position.
3. Check the grass bags and empty them if they are full.

4. Remove and separate the discharge tube and chute from the bagger top and mower. Using a stick or similar object, carefully remove and clear the obstruction from the mower, discharge tube, chute, and the bagger top.
5. After you remove the obstruction, install the complete bagger system and resume operation.

Removing the Bagger

⚠ CAUTION

Failing to remove the front bagger weights and operating the machine without the bagger attachment may cause an unstable condition which could result in a loss of control.

- **Always remove the front weights when removing the bagger attachment.**
- **Never operate the machine without the bagger attachment and the front weights still installed.**

The bagger can be removed by repeating the Setup sections from all installed bagger related kits in reverse order. If weights are installed, always remove the front bagger weights when removing the bagger attachments.

Note: When switching back to side discharge mode, remove the bagging baffle and install the original cutoff baffle and side-discharge chute that came with the machine.

Operating Tips

Tips for Bagging

Remembering the Size

Remember that the machine is longer and wider with this attachment installed. By turning too sharply in confined places you may damage the attachment.

Trimming

Always trim with the left side of the mower. Do not trim with the right side of the mower because you could damage the bagger chute and discharge tube.

Cutting Height

Do not set the mower cutting height too low because long grass surrounding the mower can prevent air from getting under the mower and entering the bagging system. If enough air does not get under the mower, the bagging system will plug.

Cutting Frequency

Cut the grass often, especially when it grows rapidly. You will have to cut your grass twice if it gets excessively long.

Cutting Technique

For best lawn appearance, be sure to slightly overlap the mower into the previously cut area. This helps reduce the load on the motors and reduces the chance of plugging the chute and discharge tube.

Bagging Speed

Most often you will bag with the blade speed in the HIGH position and drive at a normal ground speed. However, in extremely dry and dusty grass, you may want to change the blade speed to LOW and increase the ground speed of the mower. The bagging system may plug if you drive too fast and the blade speed gets too slow. On hills it may be necessary to slow the mower ground speed. This helps maintain bagging efficiency. Mow downhill whenever possible.

⚠ CAUTION

As the bagger fills, extra weight is added to the back of the machine. If you stop and start suddenly on hills, you may lose steering control or the machine may tip.

- **Do not start or stop suddenly when going uphill or downhill. Avoid uphill starts.**
- **If you do stop the machine when going uphill, disengage the blade control. Then back down the hill using a slow speed.**
- **Avoid sudden turns or rapid speed changes on slopes.**
- **Never operate the machine without the bagger attachment and the front weights still installed.**

Bagging Long Grass

Excessively long grass is heavy and may not be propelled completely into the grass bags. If this happens, the discharge tube and chute may plug. To avoid plugging the bagging system, mow the grass at a high height of cut, then lower the mower to your normal cutting height and repeat the bagging process.

Bagging Wet Grass

Always try to cut grass when it is dry because your lawn will have a neat appearance. If you must cut wet grass, use the conventional side discharge feature of the mower. Several hours later, when the clippings are dry, install the complete bagger attachment and vacuum up the grass clippings.

Signs of Plugging

As you are bagging, a small amount of grass clippings normally blow out the front of the mower. An excessive amount of clippings blowing out indicates that the bags are full or the system is plugged.

Maintenance

Note: Determine the left and right sides of the machine from the normal operating position.

Recommended Maintenance Schedule(s)

Maintenance Service Interval	Maintenance Procedure
After the first 10 hours	• Inspect the bagger.
Before each use or daily	• Clean the bagger.
Before storage	• Inspect the bagger. • Clean the bagger.

⚠ CAUTION

If you leave the key in the ignition switch, someone could accidently start the machine and seriously injure you or other bystanders.

Remove the key from the ignition before you do any maintenance..

Inspecting the Bagger Attachment

Service Interval: After the first 10 hours

Before storage

Inspect the bagger attachment after the first 10 hours of operation, and monthly thereafter.

1. Check the chute, discharge tube, and the bagger top. Replace these parts if they are cracked or broken.
2. Tighten all nuts, bolts, and screws.
3. Inspect all fasteners and latches; replace any missing or damaged.
4. Inspect the grass bags for deterioration.

⚠ WARNING

You or bystanders could be severely injured by flying debris or thrown objects that may pass through torn, worn, or deteriorated grass bags.

- **Check the grass bags for holes, rips, wear, and other deterioration.**
- **Do not wash the grass bags.**
- **If the bag has deteriorated, install new grass bags supplied by the manufacturer of this bagger attachment.**

Inspecting the Mower Blades

Inspect the mower blades regularly and whenever a blade strikes a foreign object.

If the blades are badly worn or damaged, install new blades. Refer to your mower or mower *Operator's Manual* for complete blade maintenance.

Cleaning the Bagger Attachment

Service Interval: Before each use or daily

Before storage

Note: To prevent rapid deterioration of the bag material, store the bags where they will dry completely after each use.

1. After each use, remove and wash the inside and outside of the bagger top, discharge tube, chute, and the underside of the mower, using water sprayed from a garden hose. Use a mild detergent to remove stubborn dirt.
2. Make sure you remove matted grass from all parts.
3. Flush the grass bags with water using garden hose to remove any debris.
4. After washing, let all of the parts dry thoroughly.

Storage

Storing the Bagger Attachment

1. Clean the bagger attachment; refer to Cleaning the Bagger Attachment (page 30).
2. Inspect the bagger attachment for damage; refer to Inspecting the Bagger Attachment (page 30).
3. Make sure the grass bags are empty and thoroughly dry.
4. Store the bagger in a clean, dry place, out of direct sunlight. This protects the plastic parts and extends the life of the bagger. If you must store the bagger outside, cover it with a weatherproof cover.

California Proposition 65 Warning Information

What is this warning?

You may see a product for sale that has a warning label like the following:



WARNING: Cancer and Reproductive Harm—www.p65Warnings.ca.gov.

What is Prop 65?

Prop 65 applies to any company operating in California, selling products in California, or manufacturing products that may be sold in or brought into California. It mandates that the Governor of California maintain and publish a list of chemicals known to cause cancer, birth defects, and/or other reproductive harm. The list, which is updated annually, includes hundreds of chemicals found in many everyday items. The purpose of Prop 65 is to inform the public about exposure to these chemicals.

Prop 65 does not ban the sale of products containing these chemicals but instead requires warnings on any product, product packaging, or literature with the product. Moreover, a Prop 65 warning does not mean that a product is in violation of any product safety standards or requirements. In fact, the California government has clarified that a Prop 65 warning "is not the same as a regulatory decision that a product is 'safe' or 'unsafe.'" Many of these chemicals have been used in everyday products for years without documented harm. For more information, go to https://oag.ca.gov/prop65/faqs-view-all.

A Prop 65 warning means that a company has either (1) evaluated the exposure and has concluded that it exceeds the "no significant risk level"; or (2) has chosen to provide a warning based on its understanding about the presence of a listed chemical without attempting to evaluate the exposure.

Does this law apply everywhere?

Prop 65 warnings are required under California law only. These warnings are seen throughout California in a wide range of settings, including but not limited to restaurants, grocery stores, hotels, schools, and hospitals, and on a wide variety of products. Additionally, some online and mail order retailers provide Prop 65 warnings on their websites or in catalogs.

How do the California warnings compare to federal limits?

Prop 65 standards are often more stringent than federal and international standards. There are various substances that require a Prop 65 warning at levels that are far lower than federal action limits. For example, the Prop 65 standard for warnings for lead is 0.5 µg/day, which is well below the federal and international standards.

Why don't all similar products carry the warning?

- Products sold in California require Prop 65 labelling while similar products sold elsewhere do not.
- A company involved in a Prop 65 lawsuit reaching a settlement may be required to use Prop 65 warnings for its products, but other companies making similar products may have no such requirement.
- The enforcement of Prop 65 is inconsistent.
- Companies may elect not to provide warnings because they conclude that they are not required to do so under Prop 65; a lack of warnings for a product does not mean that the product is free of listed chemicals at similar levels.

Why do we include this warning?

Our company has chosen to provide consumers with as much information as possible so that they can make informed decisions about the products they buy and use. We provide warnings in certain cases based on its knowledge of the presence of one or more listed chemicals without evaluating the level of exposure, as not all the listed chemicals provide exposure limit requirements. While the exposure from our products may be negligible or well within the "no significant risk" range, out of an abundance of caution, we have elected to provide the Prop 65 warnings. Moreover, if we do not provide these warnings, it could be sued by the State of California or by private parties seeking to enforce Prop 65 and subject to substantial penalties.