# ZLINE

ATTAINABLE **LUXURY®**

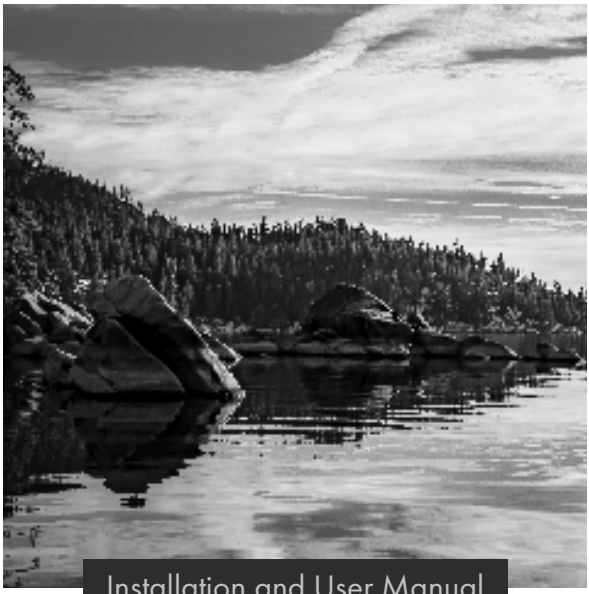

Installation and User Manual

# KITCHEN ACCESSORIES

zlinekitchen.com



ZLINE Kitchen and Bath provides Attainable Luxury, where the kitchen and bath of your dreams is never out of reach. Through our unique designs and unparalleled quality, we're dedicated to providing you an elevated experience in the heart of your home. With an endless selection of features and finishes, our inspiration is your reality.

ZLINE
ATTAINABLE **LUXURY**®



ZLINE is fueled by a passion for innovation; A relentless pursuit of bringing the highest end luxury designs and professional features into everyone's homes.

Because we continually strive to improve our products, we may change specifications and designs without prior notice.

**Scan the QR code to view the most up-to-date version of the Installation Manual and User Manual.**

⚠ WARNING: This product can expose you to chemicals including nickel, which is known to the State of California to cause cancer. For more information, go to www.P65Warnings.ca.gov.

# TABLE OF CONTENTS


IMPORTANT SAFETY INSTRUCTIONS . . . . . 1

Prior to Installation. . . . . .1

Installation Preparation . . . . . .1

Operating Conditions . . . . . .1

Tools Needed . . . . . .1

AIR GAP . . . . . 2

Parts and Specifications . . . . . .2

Installation . . . . . .3

DISPOSAL BUTTON . . . . . 4

Parts and Specifications . . . . . .4

Installation . . . . . .5

DRINK FAUCET . . . . . 6

Parts and Specifications . . . . . .6

Installation . . . . . .7

SOAP DISPENSER . . . . . .11

Parts and Specifications . . . . . 11

Installation . . . . . 12

# TABLE OF CONTENTS

POT FILLER . . . . . 14

Parts and Specifications . . . . . 14

Installation . . . . . 15

CARE AND MAINTENANCE . . . . . 18

TROUBLESHOOTING . . . . . 19

WARRANTY . . . . . 20

# IMPORTANT SAFETY INSTRUCTIONS

## PRIOR TO INSTALLATION

- Make sure that the cold and hot water lines are turned off.
- Wrap all threaded connections with plumber's tape. Always wrap in a clockwise direction.
- Cover your drain to avoid losing parts during installation.
- Do not disassemble the main faucet body, as it has been precision manufactured and tested prior to leaving the factory.
- To prevent clogging of the faucet, flush the water lines prior to installation.

## INSTALLATION PREPARATION

1. Shut off the water and let the water in the current faucet drain.
2. Assemble needed tools (below).
3. Loosen the hardware that keeps the current faucet in place. Remove faucet.

## OPERATING CONDITIONS

- Working pressure: 7.25–120 psi / 0.05–0.83 MPa (including cold and hot water pressure)
- Water temperature:
    - **Drink faucets:** 39 °F–170 °F / 4 °C–77 °C.
    - **Pot fillers:** 39 °F–194 °F / 4 °C–90 °C.

## TOOLS NEEDED

- Drill
- Phillips head screwdriver
- Pencil
- Wrench
- Bucket or suitable water container
- Use plumber's tape for a watertight seal on threaded pipe

# AIR GAP

## PARTS AND SPECIFICATIONS

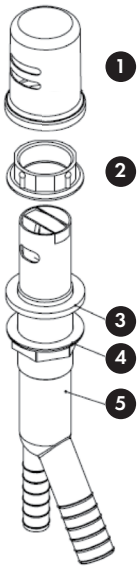


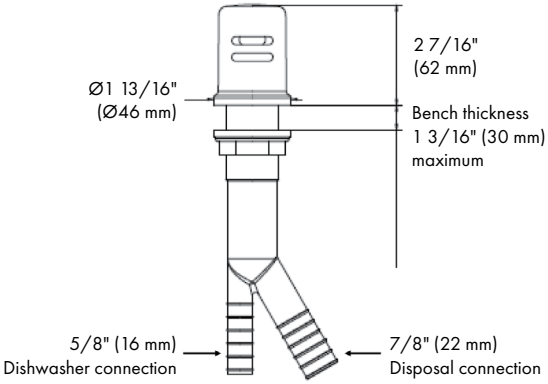


1. Sleeve with cap
2. Top nut
3. Rubber washer*
4. Lower nut
5. Air gap unit

*During installation, ensure the rubber washer (Item No. 3) is between the underside of countertop and lower nut (Item No. 4).

# AIR GAP

## INSTALLATION

### CUTOUT DIMENSIONS

- 1 3/8" (35 mm) cutout
- 1 13/16" (46 mm) is the maximum installation depth on the countertop.

1. The vented cap with sleeve (Item No. 1) can be removed by pulling straight upward. Then, turn the top nut counter-clockwise to remove it from the air gap unit (Item No. 5).
2. From under the countertop, install the air gap unit (Item No. 5) through the sink hole with approximately 1/2" (13 mm) thread above the countertop. Ensure the rubber washer (Item No. 3) is between the underside of countertop and lower nut (Item No. 4).
3. From above the counter top, thread the top nut (Item No. 2) onto the air gap unit (Item No. 5) and tighten. Do not overtighten, as this may cause damage to the air gap or countertop.
4. Reinstall the sleeve with cap (Item No. 1) onto the air gap unit (Item No. 5).
5. Use the vertical 5/8" (16 mm) connection for the dishwasher and the 7/8" (22 mm) angled connection for the garbage disposal. **NOTE:** Hose clamps are not supplied.

**NOTE:** If new garbage disposal has been installed, be sure to remove the knock-out plug so the dishwasher can drain properly.

# DISPOSAL BUTTON

## PARTS AND SPECIFICATIONS

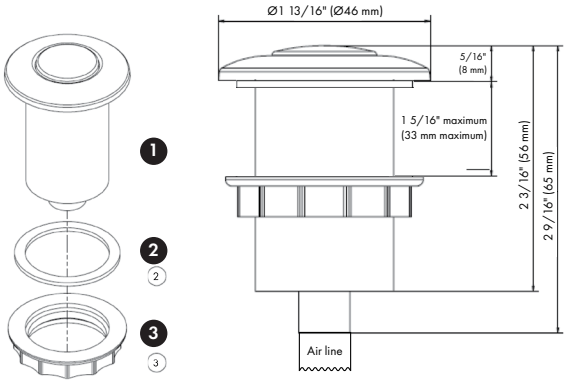


1. Air switch unit
2. Rubber washer
3. Mounting nut

**NOTE:** ZLINE does not supply an air line.

# DISPOSAL BUTTON

## INSTALLATION

### CUTOUT DIMENSIONS

- 1 1/4" (32 mm) cutout
- 1 5/16" (33 mm) is the maximum installation depth on the countertop or wall.

1. Remove the mounting nut (Item No. 3) from the air switch unit (Item No. 1).
2. Install the air switch unit (Item No. 1) into the mounting hole. Ensure the rubber washer (Item No. 2) is in place under the air switch unit (Item No. 1) for water seal.
3. From under the countertop, install the mounting nut (Item No. 3) and tighten. Do not overtighten, as this may cause damage to the disposal button or countertop.
4. Route the air line from the electrical control switch to the bottom of the air switch (Item No. 1).

# DRINK FAUCET

## PARTS AND SPECIFICATIONS

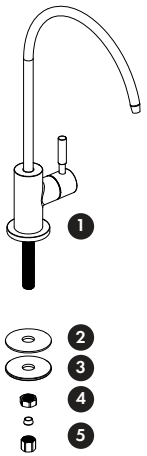


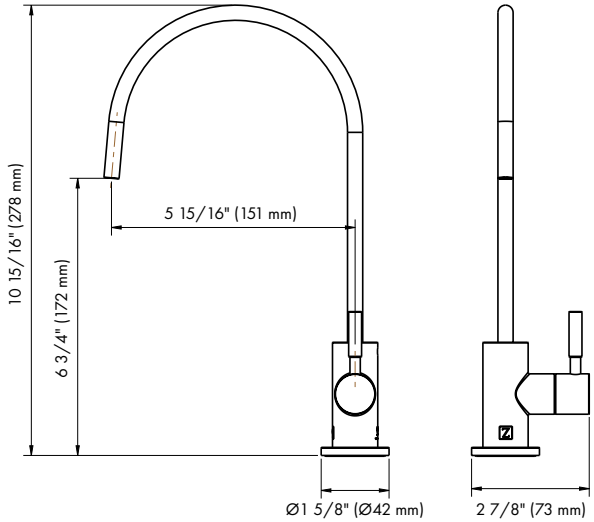


1. Faucet body
2. Rubber washer
3. Metal washer
4. Fixing nut
5. Compression fitting

# DRINK FAUCET

INSTALLATION

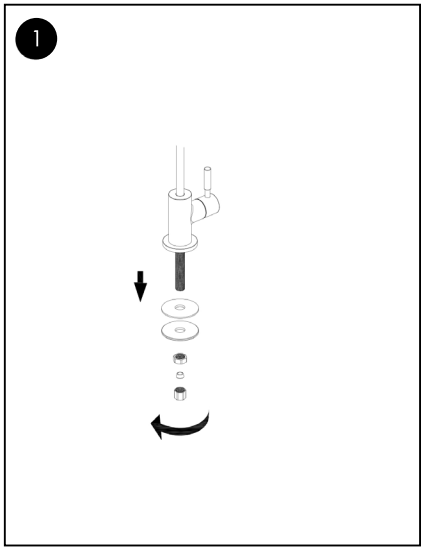


Remove the fixing nut and washers and put aside.

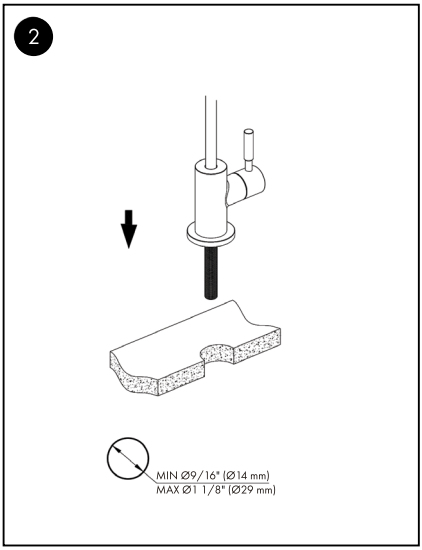


Insert the beverage faucet into the hole in the countertop.

# DRINK FAUCET

INSTALLATION

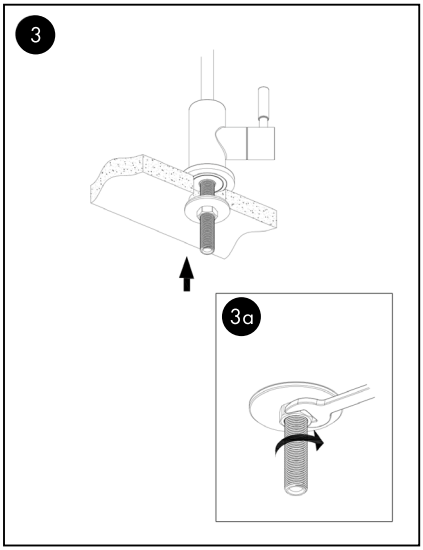


Thread the washers and fixing nut onto the faucet. Do not overtighten, as this may cause damage to the faucet or countertop.

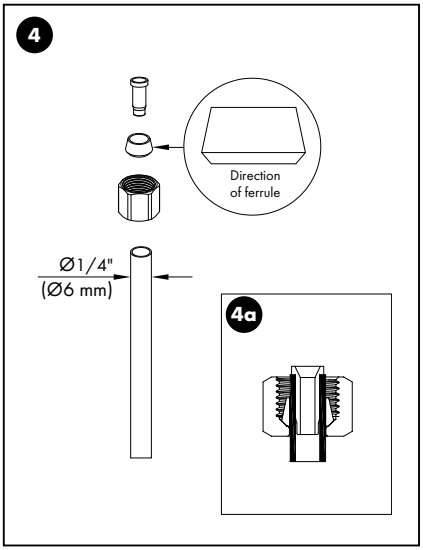


Slide the nut, then the ferrule, onto the water line. Then, place the plastic insert into the water line. Ensure the ferrule is in the correct orientation.

# DRINK FAUCET

## INSTALLATION

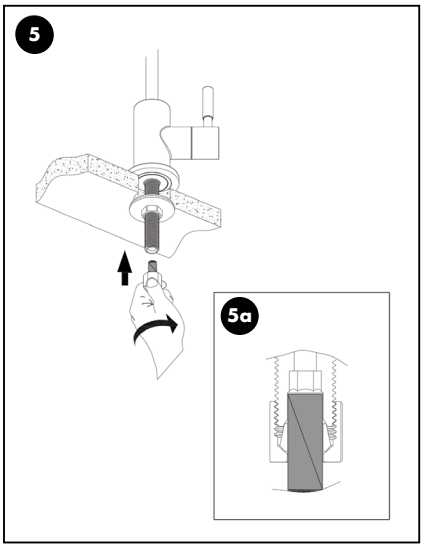


Slide the water line into the faucet and tighten the nut to seal the water connection and secure the line in place.

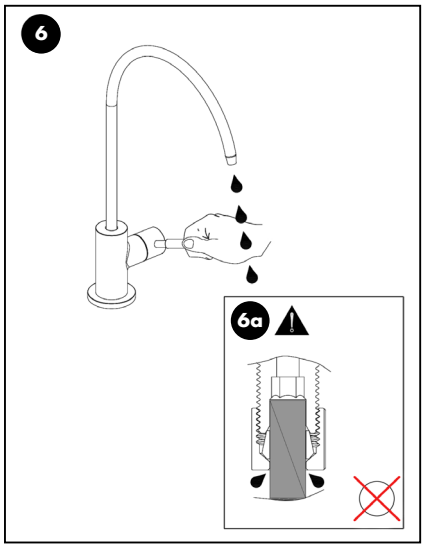


Test the faucet. Make sure there are no leaks.

# DRINK FAUCET

INSTALLATION

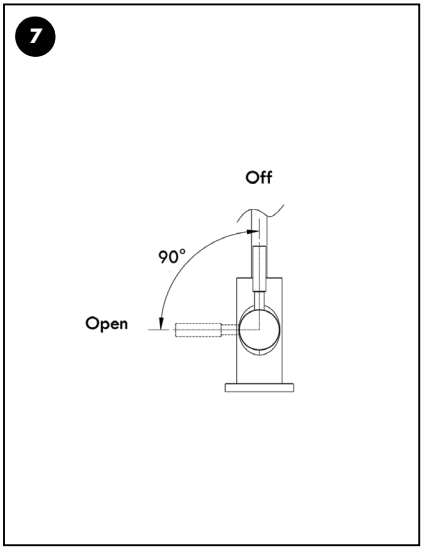


Review the diagram to understand the on and off settings.

# SOAP DISPENSER

## PARTS AND SPECIFICATIONS

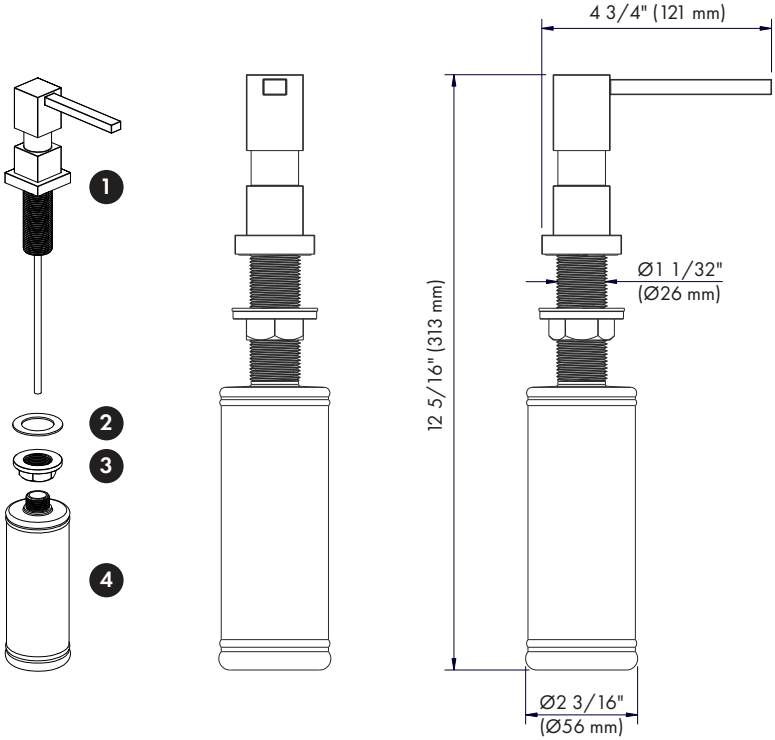


1. Soap dispenser head
2. Rubber washer
3. Locknut
4. Soap reservoir

# SOAP DISPENSER

INSTALLATION

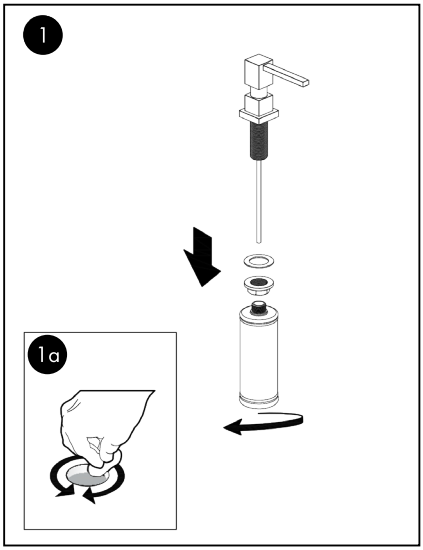


Remove the bottle, locknut, and washers and set aside.

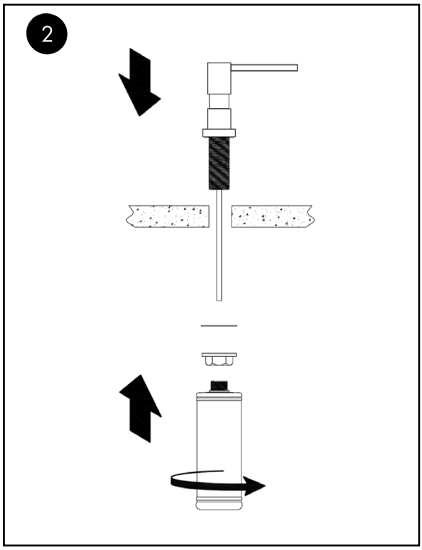


Insert the dispenser into the hole in the countertop. From under the counter, thread the washers, locknut, and bottle to the dispenser.

# SOAP DISPENSER

INSTALLATION

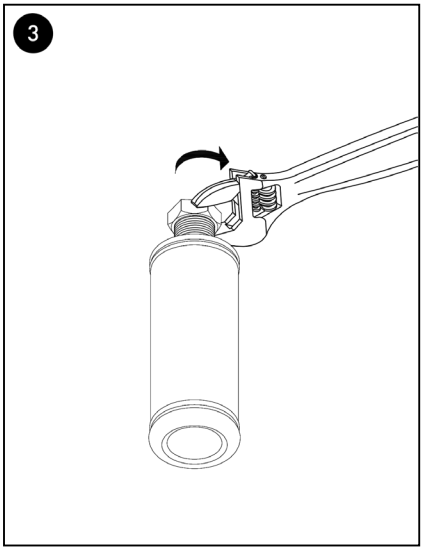


Tighten the lock nut to secure the dispenser in place. Do not overtighten as this may damage the dispenser or countertop.

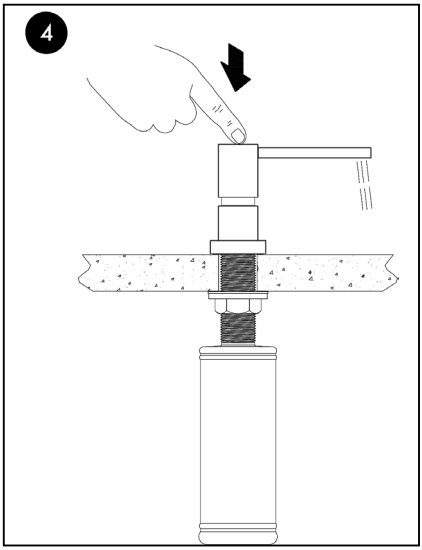


Test the soap dispenser.

# POT FILLER

## PARTS AND SPECIFICATIONS

### GEMINI MODELS

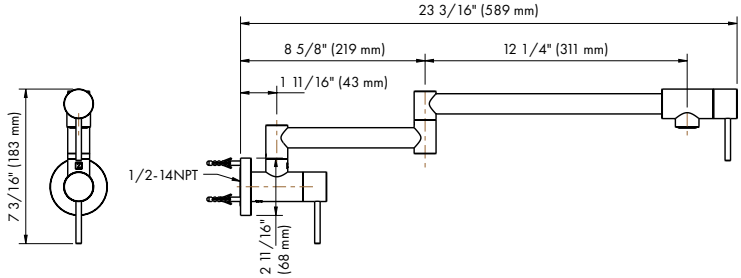


### REMBRANDT MODELS

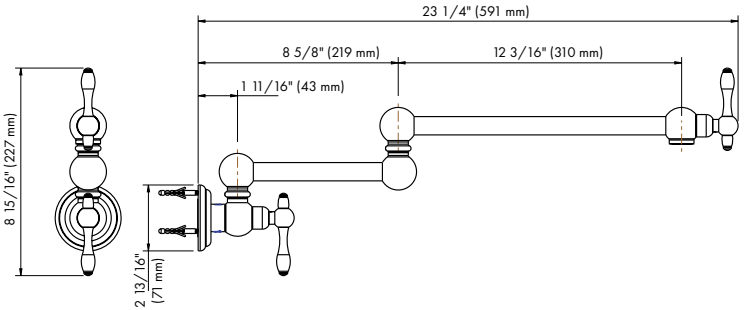


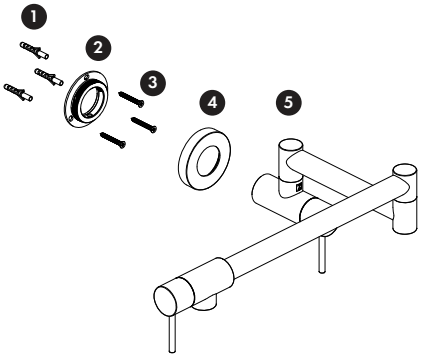


1. Wall anchor
2. Mounting plate
3. Flange screws
4. Flanges
5. Pot filler

# POT FILLER

## INSTALLATION

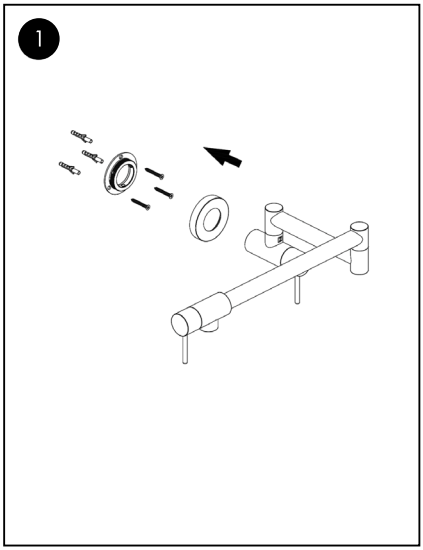


Align faucet parts with pipe to check for compatibility.

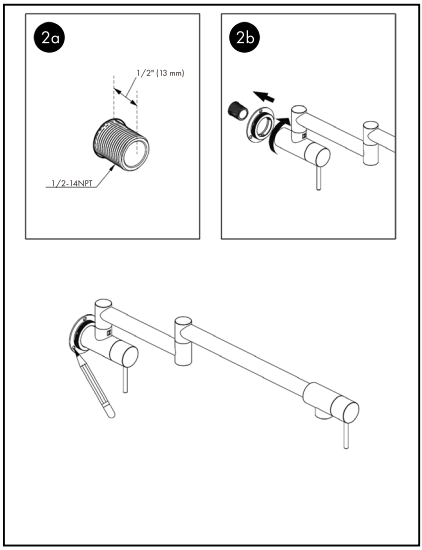


Place the mounting bracket over the exposed water connection. Use a pencil to mark where the screw holes will be drilled.

# POT FILLER

INSTALLATION

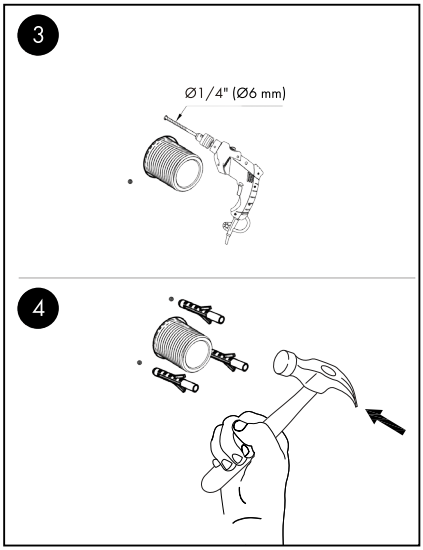


Insert the anchors as needed. Use a hammer to lightly tap them into place. If possible, it is recommended to drive at least one screw into a wooden support.

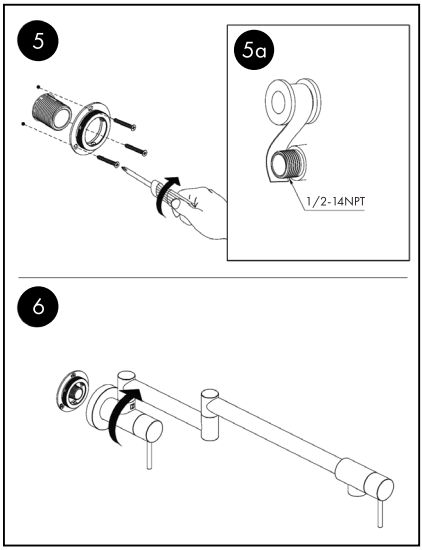


Drive the screws through the newly drilled holes to secure the mounting bracket in place. Wrap plumber's tape around the water connection in a clockwise direction. Thread the pot filler onto the water connection.

# POT FILLER

## INSTALLATION

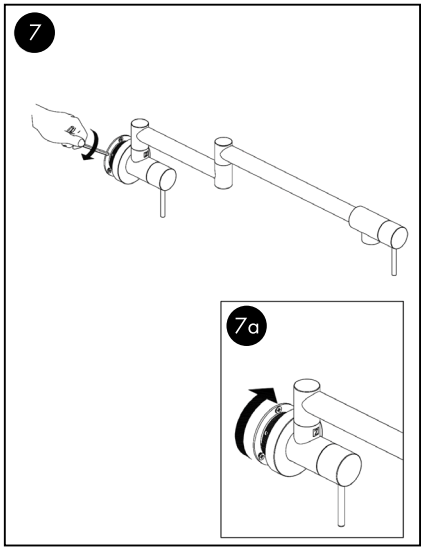


Using the provided Allen wrench, secure the pot filler in place by tightening the set screw.

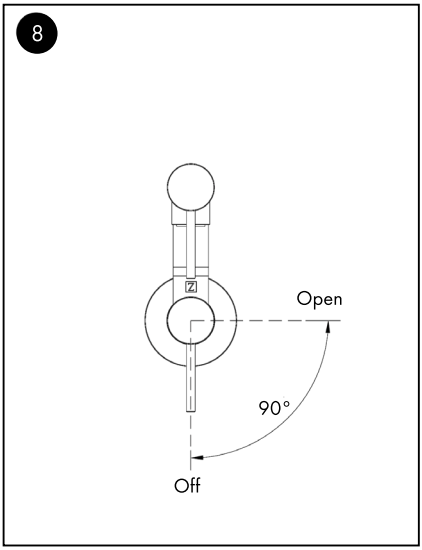


Review the diagram to understand the on and off settings.

# CARE AND MAINTENANCE

To keep products clean and shining, follow the steps below:

1. Rinse clean with water and dry with a soft cloth.
2. Do not clean with soaps, acid, polish, abrasives, or harsh cleaners.
3. Do not use cloth with a coarse surface.
4. Unscrew the aerator and clean when necessary.

- If soldering the water connections when installing a faucet, remove the O-rings, cartridges, and washers before applying any heat. Turn on the water and flush the fixture after soldering to remove any contaminants before reinstalling the O-rings, cartridges and washers.
- Protect your eyes when cutting or soldering.
- Do not over tighten screws/nuts. Finger tighten, then use a wrench/Phillips head screwdriver to tighten the fixing screw/nut until snug.

# TROUBLESHOOTING

| PROBLEM | POSSIBLE CAUSE | SOLUTIONS |
|---|---|---|
| There is leakage under the handle. | The locking nut has come loose. | Unscrew the lever on the handle by hand. Loosen set screw with an Allen/ hex key. Remove the handle and unscrew cap by hand. Tighten locking nut with an adjustable wrench. |
| Water will not shut off completely. | Cartridge may be defective. | Unscrew the lever on the handle by hand. Loosen set screw with an Allen/ hex key. Remove the handle and unscrew cap by hand. Unscrew the locking nut with an adjustable wrench. Remove ceramic disc cartridge. Check for cracks. |

# WARRANTY

## COVERAGE

ZLINE Kitchen and Bath ("ZLINE") plumbing products have a limited lifetime warranty from the original purchase date for the original purchaser of the product.

ZLINE warranty periods begin from the original date of product delivery and solely cover the original purchaser of the product, delivered new and in its original carton. ZLINE will provide free-of-charge, non-consumable replacement parts for the components that failed due to manufacturing defects. It is the responsibility of the customer to install all replacement parts, as ZLINE does not perform service repairs on its plumbing products.

ZLINE's liability is limited to the original purchase price of the product. Additional injuries, losses, damages, or other inconveniences caused by product malfunction or defects in materials are not covered under the terms of this warranty.

## TERMS

ZLINE warranties apply only to the original purchaser of a ZLINE product installed for normal residential use. This is defined as a single-family, residential dwelling in a non-commercial setting. Any warranty claim stemming from installation, operation, or any other use within a commercial setting is not covered under this limited warranty.

Commercial settings include, but are not limited to: schools, churches, hotels, restaurants, vacation rentals such as Airbnb, daycare centers, private clubs, fire stations, common areas in multi-family dwellings, nursing homes, food service locations, and institutional food service locations such as hospitals or correctional facilities.

This warranty is non-transferable and will not under any circumstance be extended based on the date of installation — the warranty period takes effect from the date of delivery and only covers the original purchaser. The warranty applies only to products installed in the contiguous United States and the District of Columbia.

Out-of-pocket payments will not be reimbursed for replacement parts unless prior approval is received from ZLINE. Unapproved out-of-pocket payments for parts will not be reimbursed. Out-of-pocket payments for any type of service will not be reimbursed, as ZLINE does not perform service repairs on its plumbing products. All warranty procedures must be followed to maintain warranty coverage.

# WARRANTY

If ZLINE is unable to replace the defective part after a reasonable number of attempts, ZLINE reserves the right to offer to replace the product or provide the original purchaser a full refund of the purchase price of the product (not including installation, removal, or other charges that were not included in the original purchase price).

The original purchaser of the product must provide the original proof of purchase, including the purchase date, when filing a claim to obtain replacement parts or refunds. Additionally, the original purchaser of the product must provide the serial number of the product when filing a claim to obtain replacement parts or refunds.

This warranty shall not apply to any ZLINE product in which the original factory serial number has been removed, altered, or cannot be readily determined for any reason. Further, ZLINE is not responsible for damage resulting from, but not limited to: shipment, delivery, or improper installation; negligence or improper maintenance, misuse, or abuse of the product; unauthorized alteration, modification, or tampering with the product; accident, fire, floods, pest infestations, pandemics, natural disasters, or any other unpreventable or unexplained acts of nature, commonly referred to as "acts of God"; water leaks or water damages caused by improper water supply or water connections associated with installation or disassembly of the product; and service to correct installation not in accordance with the instructions contained in ZLINE's product manuals and/or with local government codes.

Additionally, this plumbing warranty does not apply to aesthetic damage, scratches, or natural wear caused by normal use; second-hand, open box products, or products purchased from an unauthorized retailer; consumable parts including, but not limited to, rough-in valves, aerators, diverter handles, sprayers, spouts, hoses, and flange covers; and damages, problems, or any type of performance-related issues stemming from alteration or tampering with the product, including, but not limited to, painting stainless steel, black stainless, Satin Stainless Steel, or any other finishes or any portion of the product's interior or exterior.

Information contained within ZLINE's installation and user manuals, in addition to product information included on ZLINE's website and all related digital listings, do not cover every possible condition and situation that may occur during the installation or operation of ZLINE products.

# WARRANTY

ZLINE reserves the right to make changes at any time to its products when considered safe, necessary, and useful. Always check the ZLINE website for the most up-to-date version of its product manuals: www.zlinekitchen.com/pages/manuals.

Do not install or operate any ZLINE product if it has missing or broken parts or if it arrives damaged due to shipping. If ZLINE products arrive damaged, contact ZLINE Customer Experience at 1-614-777-5004 for help. Failure to report a damaged appliance prior to installation or operation may void the warranty. ZLINE does not perform service repairs on its plumbing products. ZLINE disclaims responsibility for damage or injury caused by improper installation or use of any of its products.

# WARRANTY

SERVICE

For warranty service, please contact our Customer Service team at 1-614-777-5004 or visit www.zlinekitchen.com/contact to utilize our online Customer Experience Portal.

Scan the QR code to view the most up-to-date version of our Installation and User Manual.

Need to purchase a part or accessory for your ZLINE product?
Visit www.zlineparts.com, ZLINE's official parts distribution partner.

2.1.2

zlinekitchen.com

1-614-777-5004

contact@zlinekitchen.com

ZLINE
ATTAINABLE **LUXURY**®