PRORUN®

EXTENSION ATTACHMENT

MODEL: PPA300

Operator's Manual

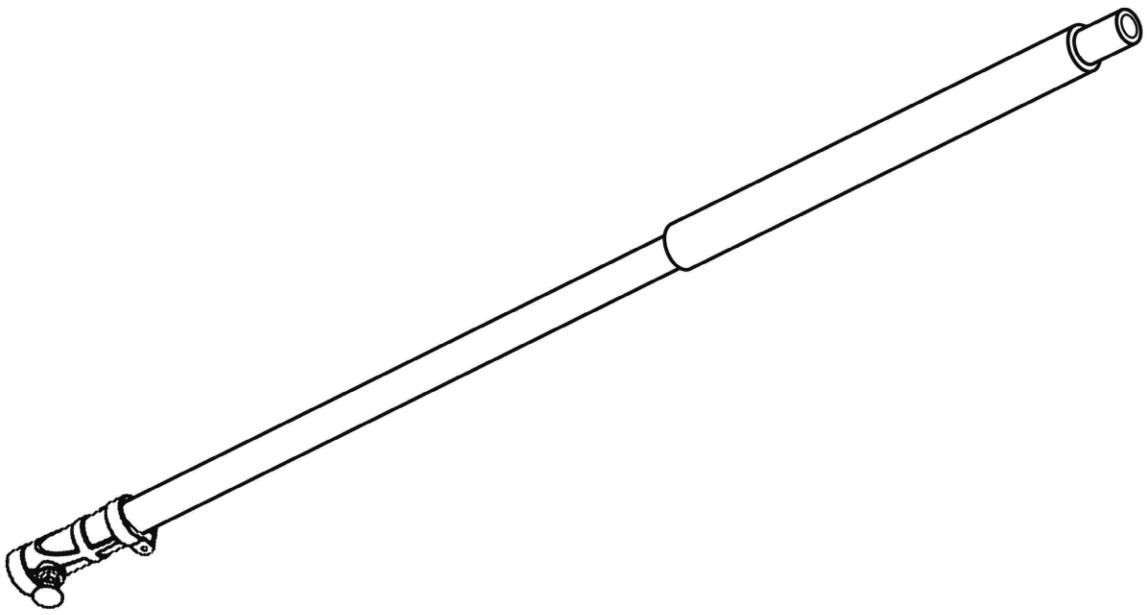

Everything PRORUN

Before operating, read the instructions.

⚠ **IMPORTANT - READ CAREFULLY BEFORE USE**

⚠ **IMPORTANT SAFETY INSTRUCTIONS – SAVE THESE INSTRUCTIONS**

WARNING: To reduce the risk of injury, the user must read and understand the Operator's Manual before using this product. Save these instructions for future reference.

Please let us know what you think.
To leave a review and see our full line of products, visit:

proruntech.com ★★★★★
1-844-905-0882, info@proruntech.com

Version: B - Issue Date: 2023/03/31

1. INFORMATION OF SYMBOLS





WARNING! An engine can be dangerous if used incorrectly or carelessly, and can cause serious or fatal injury to the operator or others. It is extremely important that you read and understand the contents of this owner's manual.
Please read the operator's manual carefully and make sure you understand the instructions before using the machine.

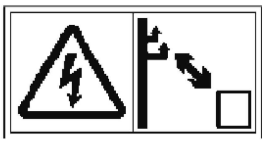

Keep the machine a sufficient distance away from electrical power lines.

2. IDENTIFICATION

Components and Controls

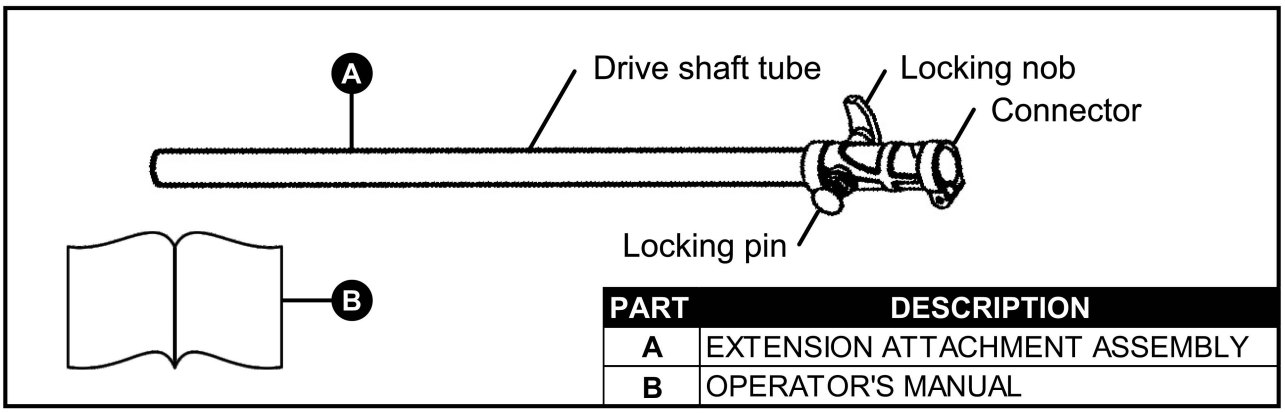

PART	DESCRIPTION
A	EXTENSION ATTACHMENT ASSEMBLY
B	OPERATOR'S MANUAL

3. IMPORTANT

Please read the operator's manual carefully. Become familiar with the owner's manual before attempting to operate the equipment.
Under no circumstances may the design of the machine be modified without the permission of the manufacturer.
Always use genuine accessories. Non-authorized modifications and/or accessories can result in serious personal injury or the death of the operator or others.
Beware of overhead power lines.

4. CONNECTING THE TUBE

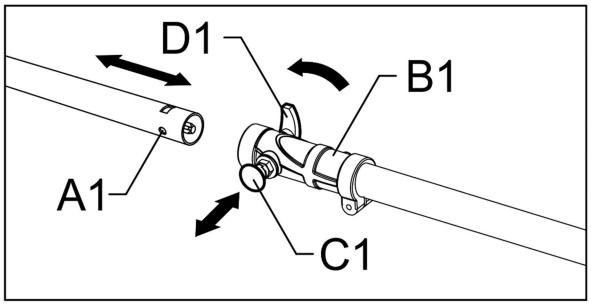

Connecting the attachment to the gas multi-tool powerhead

1.Align the round hole (A1) on the attachment's front tube and the lock pin (C1).
2.Pull the lock pin out while inserting the attachment tube into the connector (B1).

Push the attachment tube to the end until the lock pin aligns with the round hole.

3.Release the lock pin, it will return to its original position automatically and insert itself into the round hole on the attachment tube.

4.Make sure the attachment's tube cannot be rotated after the lock pin is back to its original position.

5.Turn the lock knob (D1) clockwise to tighten the attachment tube securely.

Connecting the attachment to the cordless multi-tool powerhead

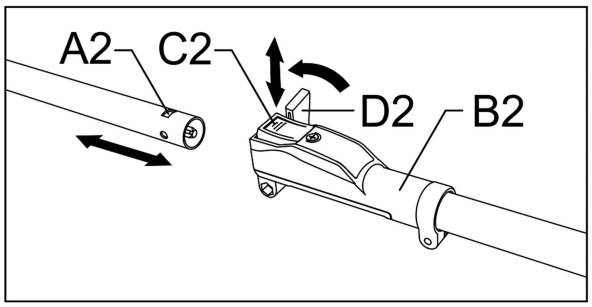

1.Align the rectangular hole (A2) on the attachment's front tube and the lock lever (C2).

2.Press down the lock lever while inserting the front tube into the connector (B2). Push the attachment tube to the end of the connector.

3.Release the lock lever, it will return to its original position automatically and insert the locking tab into the rectangular hole on the attachment tube.

4.Make sure the attachment's tube cannot be rotated after the lock pin is back to its original position.

5.Turn the lock knob (D2) clockwise to tighten the attachment tube securely.

5. TECHNICAL IMFORMATION

Technical data	Unit	PPA300
Length	mm	1000
Weight		1.98 Lbs. (0.9 kg)

PRORUN / TOPSUN USA
200 Overhill Drive, Suite A
Mooresville, NC 28117
Proruntech.com
info@proruntech.com
Phone: 1-844-905-0882

Zhejiang Zhongjian Technology Co., Ltd
Web: www.topsunpower.cc
E-mail: sales@topsunpower.cc
ADD: No.155 Mingyuan North AVE, Economic Development Zone,
Yongkang, Zhejiang, 321300, P.R.China
Made In Chin