ENGLISH

FORNO®

Alta Qualita

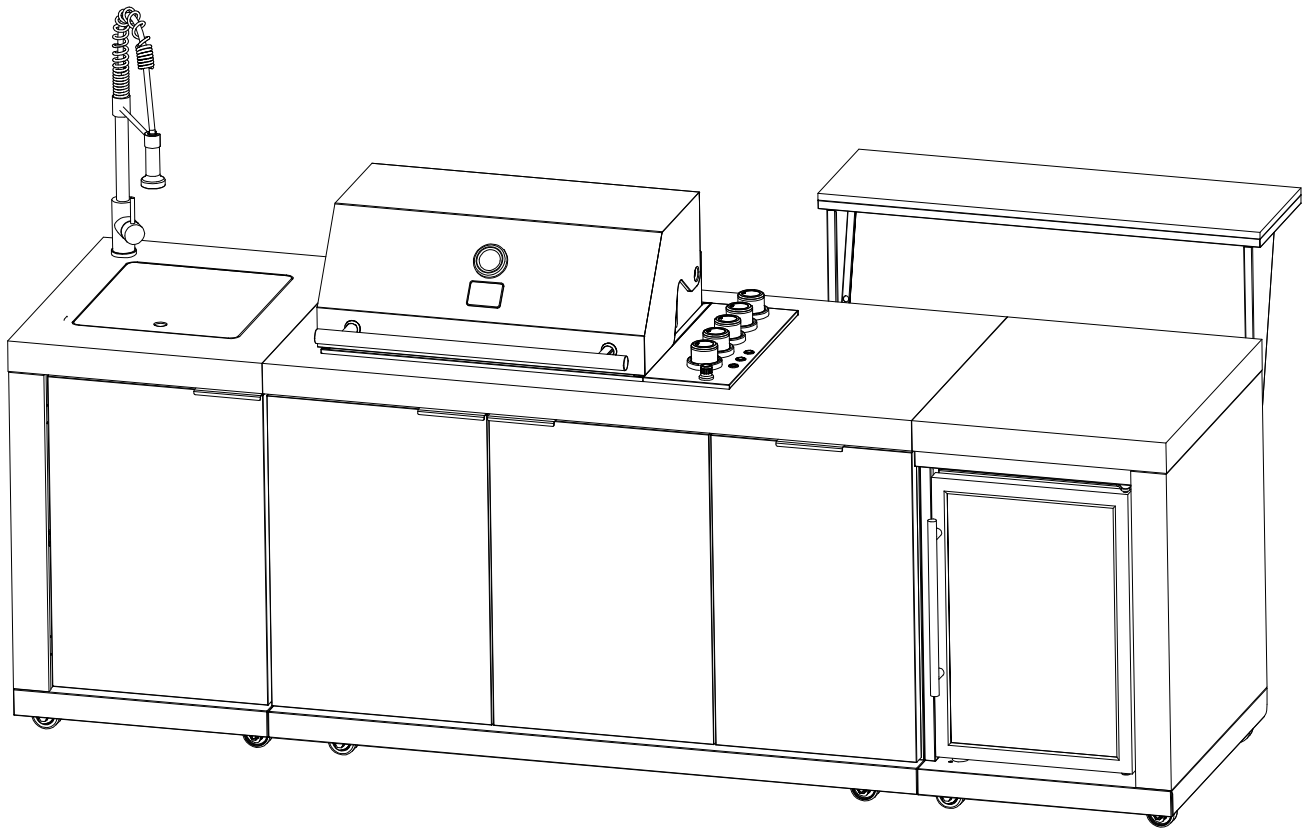

3-Piece Black Aluminum Outdoor Kitchen Set.
3-Burners gas grill with 1 ceramic infrared burner, 17.5” Refrigerator, stainless steel sink with faucet and Grey Sintered Stone Countertops

MODEL NUMBER SERIES:
FODKT2544BLK

Part 1/2

INSTRUCTION MANUAL & INSTALLATION GUIDE

USE OUTDOORS ONLY

2024-8-27

Read these instructions carefully before using your appliance, and keep it carefully.
If you follow the instructions, your appliance will provide you with many years of good service.

TABLE OF CONTENTS

Customer Care	3
Warning	4
Important Safety	5
Proper Location of the Grill	7
Product technical data	9
Product Dimension	10
Cutout	11
Names of Parts and Accessories	12
Lighting Instruction	13
Installations	14
Adjustment of Door Hinge	17
Connection	19
Using Your Grill	21
Cleaning and Maintenance	24
Troubleshooting	27
Natural gas conversion	28
Sear Zone Infrared Burner	34
Warranty	35

Customer Care

Thank you for purchasing a Forno product. Please read the entire instruction manual before operating your new appliance for the first time. Whether you are an occasional user or an expert, it will be beneficial to familiarize yourself with the safety practices,features, operation and care recommendations of your appliance.

Both the model and serial number are listed inside the product. For warranty purposes, you will also need the date of purchase.

Record this information below for future referenc

Product Information

Model Number : _____

Serial Number : _____

Date of Purchase : _____

Purchase Address And Phone : _____

_____

_____

Service Information

Use these numbers in any correspondence or services calls concerning your product.

If you received a damaged product, immediately contact Forno.

To save time and money, before you call for serviced, check the troubleshooting guide. It listed the causes of minor operation problems that you can correct yourself.



"Need some quick help? Simply scan the qr code and get access to our fast support form. We're always here to assist you with any questions or concerns you may have. So, don't hesitate to reach out!"

Services in Canada and Untied States

Keep the instruction manual handy to answer your questions. If you don't understand something or need more assistance, please visit our website for fast support. Please provide us your name, number, address,serial number of the product that troubleshooting, proof of purchase, and a short description of the issue. A customer service representative will contact you as soon as possible. All warranty work needs to be authorized by FORNO customer service. All our authorized service providers are carefully selected and rigorously trained by us.

Danger

- If you smell gas:
- Shut off gas to the appliance .
- Extinguish any open flame
- Open lid.
- If odor continues, keep away from the appliance and immediately call your gas supplier or your fire department .

Warning

- Do not store or use gasoline or other flammable liquids or vapors in the vicinity of this or any other appliance.
- An LP cylinder not connected for use shall not be stored in the vicinity of this or any appliance .

California Proposition 65 Warning:

- California Proposition 65 Warning:

Chemicals including Chromium(hex avalent compounds) known to the State of California to cause cancer, birth defects or other reproductive harm are found in and/or created by the combustion of natural gas, propane, butane and other fuels. Always operate this unit as described in the owner's manual and in well ventilated areas.
Read all instructions before you operate your grill. Save these instructions!
For more information go to **www.P65Warnings.ca.gov**

Read all instructions before you operate your grill. Save these instructions!

Placement and Location

- **For outdoor use only.**
- Never locate this appliance in an enclosed room, under a sealed overhead structure, or in any type of enclosed area such as a garage, shed, or breezeway. Keep clear of trees and shrubs.
- Do not place this grill under or near windows or vents that can be opened into your home.
- Grills are not intended for installation in or on recreational vehicles or boats.
- Maintain sufficient distance as to not overheat any overhead combustible material such as a patio cover.
- The area surrounding your new grill should be kept clean and free from flammable liquids and other combustible materials such as mops, rags or brooms, as well as solvents, cleaning fluids, and gasoline.
- Do not use the grill, grill cabinet, or area surrounding the grill as a storage area for flammable or plastic items. Do not store the liquid propane (LP) cylinder in the vicinity of this or any other appliance when it is not being used.

Set-Up

- Before installing built in grills in enclosures, copy all product information such as model number, serial number and type of grill (e.g. natural gas or LP) and store information in a safe place. This information is located on a plate located behind the grill and is visible when the hood is lowered or on the right side of the chassis. There is an area on the back cover of this manual where you can write down this information.
- We recommend that a licensed contractor install your Forno grill. Installation must conform to local codes, or in the absence of local codes, with either the *National Fuel Gas Code,* ANSI Z223.1 / NFPA54, *Natural Gas and Propane Installation Code*, CSA B149.1, or *Propane Storage and Handling Code*, B149.2), as applicable.
- Your Forno grill must be plugged into a permanent, grounded 120V outlet with a dedicated 15A GFCI breaker in accordance with local codes or the *National Electrical Code, ANSI / NFPA 70*, or the *Canadian Electrical Code, CSA C22.1*.
- Do not use an extension cord to supply power to your Forno grill. Such use may result in fire, electrical shock or other personal injury. Do not install a fuse in the neutral or ground circuit. A fuse in the neutral or ground circuit may result in an electrical shock hazard. Do not ground this appliance to a gas supply pipe or hot water pipe. Keep any electrical supply cords and the fuel supply hose away from any heated surfaces.
- To prevent fire and smoke damage, remove all packaging material before operating grill.
- Before you start cooking, clean the entire grill thoroughly with hot, soapy water. This is necessary to remove residual solvents, oil and grease used in the manufacturing process. The grates should also be thoroughly cleaned in the same manner.

DANGER

What To Do If You Smell Gas

- Shut off gas to the appliance.
- Extinguish any open flame.
- Open lid.
- If odor continues, keep away from the appliance and immediately call your gas supplier or your fire department.

Operation

- Do not use grill for other than intended use.
- In the event that a burner goes out, turn burner knobs to the full OFF position, fully open the grill hood and let it air out. Do not attempt to use the grill until the gas has had time to dissipate.
- Never use the grill if the drip pan is not properly installed. Drip pan should be pushed all the way to the rack located just under the grill. Fire or explosion can result from an improperly installed drip pan.
- Keep all electrical supply cords and the rotisserie

motor cord away from the heated areas of the grill.

- Never use the grill or side burner in windy conditions. If used in a consistently windy area a windbreak will be required. Always adhere to the specified clearances listed in this manual.
- Never line the grill or side burners with aluminum foil.
- When the unit is not in use, be sure to turn off the gas at the LP tank.
- Do not install or operate your grill unit in such a manner that the cross ventilation openings are blocked. Fresh air must be able to pass though installed vents to safeguard against residual gas accumulation. Failure to allow proper ventilation may cause fire or explosion.
- When handling LP gas line and connectors, do not allow them to come in contact with any metal surfaces of the cabinet. Do not drop LP connectors.
- Do not use fuel such as charcoal briquettes in gas grills.
- Gas sources to the grill and side burners must be regulated. Do not operate grill or side burners if regulators have been removed, fire or explosion can occur.
- Never leave the grill and side burners unattended when in use. When using pots and pans, boil-overs will cause smoking and greasy boil-overs may ignite.
- Always use the proper size pan. Select utensils with flat bottoms large enough to cover the burner. The use of under-sized utensils exposes the sides of the utensils to direct contact with a portion of the flame. This can scorch utensils and hamper cleanup. Excessive flames on large stainless steel pots can result in permanent discoloration. For best results, we recommend commercial quality aluminum pans and utensils.
- Always position handles of utensils so they do not extend over adjacent work areas or cooking areas. This reduces the risk of burns, ignition of flammable materials, and spillage due to accidental contact with the utensils.
- Do not use water on grease fires. Never pick up a flaming pan. Turn the appliance off and smother the flaming pan with a tight-fitting lid, a cookie sheet or a flat tray. For flaming grease outside of the pan, smother it with baking soda or use a dry chemical or foam-type fire extinguisher.
- Never allow clothing, pot holders or other flammable materials come in contact with or be close to any grate, burner or hot surface until it has fully cooled. Never wear loose fitting or hanging garments while using your grill. Fabric may ignite and result in personal injury.
- When using the grill, do not touch the grill rack, burner grate, or immediate surroundings as these areas become extremely hot and can cause burns. Use handles or knobs.
- Only use dry pot holders and do not use a towel or other bulky cloth in place of pot holders. Moist or damp pot holders used on hot surfaces can cause burns.
- Do not heat any unopened glass or metal container of food on the grill. Pressure may build up and cause the container to burst, possibly resulting in serious personal injury or damage to the grill.
- Do not reach over your grill or any other surfaces when hot or in use.

Maintenance and Repair

- Spiders and other insects can nest in the burners of the grill and block the gas and airflow to the burner ports. This creates a dangerous condition that can result in a fire behind the valve panel. Inspect and clean the burners periodically and follow the guidelines in the Cleaning and Maintenance section of this manual.
- Unless specifically recommended in this manual, do not repair or replace any part of the grill. A qualified technician should perform all service. Any repairs made by a non-LMS approved dealer technician will void your warranty.

Storage

- When your gas grill is not in use, turn off the gas at the supply cylinder.
- Storage of a grill indoors is permissible only if the supply cylinder is disconnected and removed.

Precautions Regarding Children

- Never leave children unattended in the area where the grill is being used. Close supervision of children is necessary when any appliance is use near children.
- Do not store items of interest to children around or below the grill.
- Never allow children to sit or stand on any part of the grill.

Proper Location of the Grill

Here are some general considerations when determining where to place your new barbecue island. Be certain that your installation will meet all city and local safety codes and requirements.

When planning your grill location, access to gas lines and 120V power supplies should be considered. If you are using natural gas, the location with the shortest gas line run is recommended. You may need a grounded, dedicated, 15A120V GFCI power source for use of your appliances (e.g., lights, rotisserie, refrigerator, receptacles, etc.).

When determining a suitable location, consider factors such as exposure to wind, proximity to traffic paths, and windows that open into the home.

Locate the grill enclosure any place where there is adequate ventilation. The size and configuration of your house and yard will determine how you should locate your grill enclosure, but as a general rule, do not place it under or near windows that can be opened into your home. Ventilation is address in greater detail in the next section.

The sides, bottom and back of the grill enclosure should not be any closer than 36" to combustible construction.

To reduce the risk of personal injury caused by reaching over a hot appliance, avoid locating cabinet storage space directly above the outdoor grill.

Grills are designed for outdoor use only .

Carbon Monoxide Hazard

This appliance can produce carbon monoxide which has no odor.



Using it in an enclosed space can kill you.

Never use this appliance in an enclosed space such as a camper, tent, car, or home.

Ensuring Proper Ventilation

Do not locate your barbecue island in an enclosed area, which is any covered area that is walled on two, three, or four sides. This includes areas or rooms such as a garage, shed, breezeway, patio, cabana, etc.

Although some enclosed areas may have windows, screens, or ventilation systems, they are nevertheless considered to be hazardous and may cause damage, injury, or death. Enclosed areas are NOT a roved for a barbecue island.

Do not locate your barbecue island under a sealed overhead structure. Acceptable overhead structures allow for airflow, such as screen or lattice.

You can install an awning over your barbecue island, provided you make sure it is high enough to prevent damage or fire. We recommend a minimum overhead distance of six feet from the top of the grill hood.

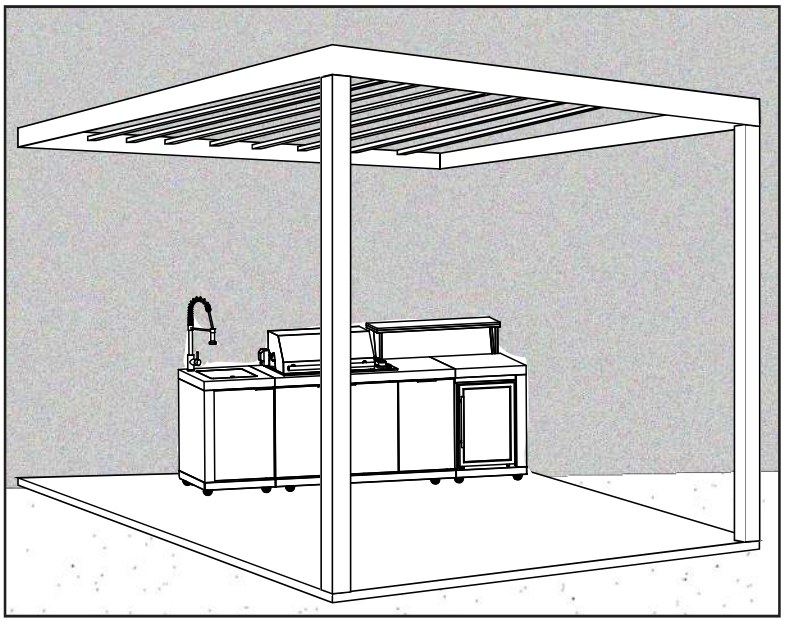

- **Solid foundation**
- **Open on three sides**
- **Minimum distance of six feet overhead from combustible material**
- **Overhead is not sealed**
- **Not placed near windows**
- **No overhead storage**
- **No combustible materials stored nearby**

Explicit information specifying the necessity for maintaining proper clearances from combustible construction, the specific minimum clearances from such construction to the sides and back of the outdoor cooking gas appliance, and that the outdoor cooking gas appliance shall not be used under overhead combustible construction.

Construction materials

Forno will not be held responsible for property damage, injury, or death as a result of locating a grill enclosure in a non-approved location or using non-approved construction materials.

DO NOT use combustible materials for the built-in construction.

Acceptable building materials: Brick, cinder block, steel frame, hardiboard, granite, tile, glass brick, concrete, cement, stucco, stone.

Unacceptable building materials: Wood of any sort, laminate or synthetic materials, plastics, linoleum, fiberglass.

In addition, we do not recommend using materials that are suscep tible to damage or decomposition by weather, such as dry wall or plaster.

Distance of product from wall

Explicit information specifying the necessity for maintaining proper clearances from combustible construction, the specific minimum clearances from such construction to the sides and back of the outdoor cooking gas appliance, and that the outdoor cooking gas appliance shall not be used under overhead combustible construction.

Product technical data

4+1 Burner BBQ

802567

CSA/ANSI Z21.58-22 CSA 1.6-22
Outdoor Cooking Gas Appliance

4+1Burner BBQ

MODEL NO: FODKT2544BLK-2
TYPE OF GAS: Propane (LPG)
Input rate(main): 12000 BTU/HR
（Orifice Size:1.02mm)
（NG Orifice Size:1.4mm)
Input rate(main infrared)： 13000 BTU/HR
（Orifice Size:1.06mm)
（NG Orifice Size:1.45mm)
Input rate(Rear): 13600 BTU/HR
（Orifice Size:1.08mm)
（NG Orifice Size:1.53mm)
Total rate: 62600 BTU/HR

CAUTION:Use only the gas pressure regulator supplied with this appliance must be used .This regulator is set for an outlet pressure of 11 inch iwc.
Turn off LP supply at cylinder when appliance is not in use.
FOR OUTDOOR USE ONLY
If stored indoors, detach and leave cylinder outdoors.

Minimum ambient operating temperature: -4 °F (-20°C)
Minimum clearance from side and back of unit to combustible construction:
36” (914mm) from sides and 36” (914mm) from back.
Do not use this appliance under over head combustion surface

a.Do not store a spare LP-gas cylinder under or near this appliance.
b.Never fill the cylinder beyond 80 percent full;
If the information in (a) and (b) is not followed exactly, a fire causing death or serious injury may occur.

Warning for electric cords

Electrical Rate:120 Vac, 60Hz 70W

a. Use only with a GFI protected circuit.
b. Use only extension cords approved for outdoor use marked with W-A and rated for the power of this appliance.

CTM Household Appliances INC.
Phone 514-324-4200 Fax 514-3241677
Address 11420, boul. Albert-Hudon, Montreal , Quebec, Canada
Postcode H1G 3J6

Serial Number: FODKT2544BLK-2/24060001

Product Dimension

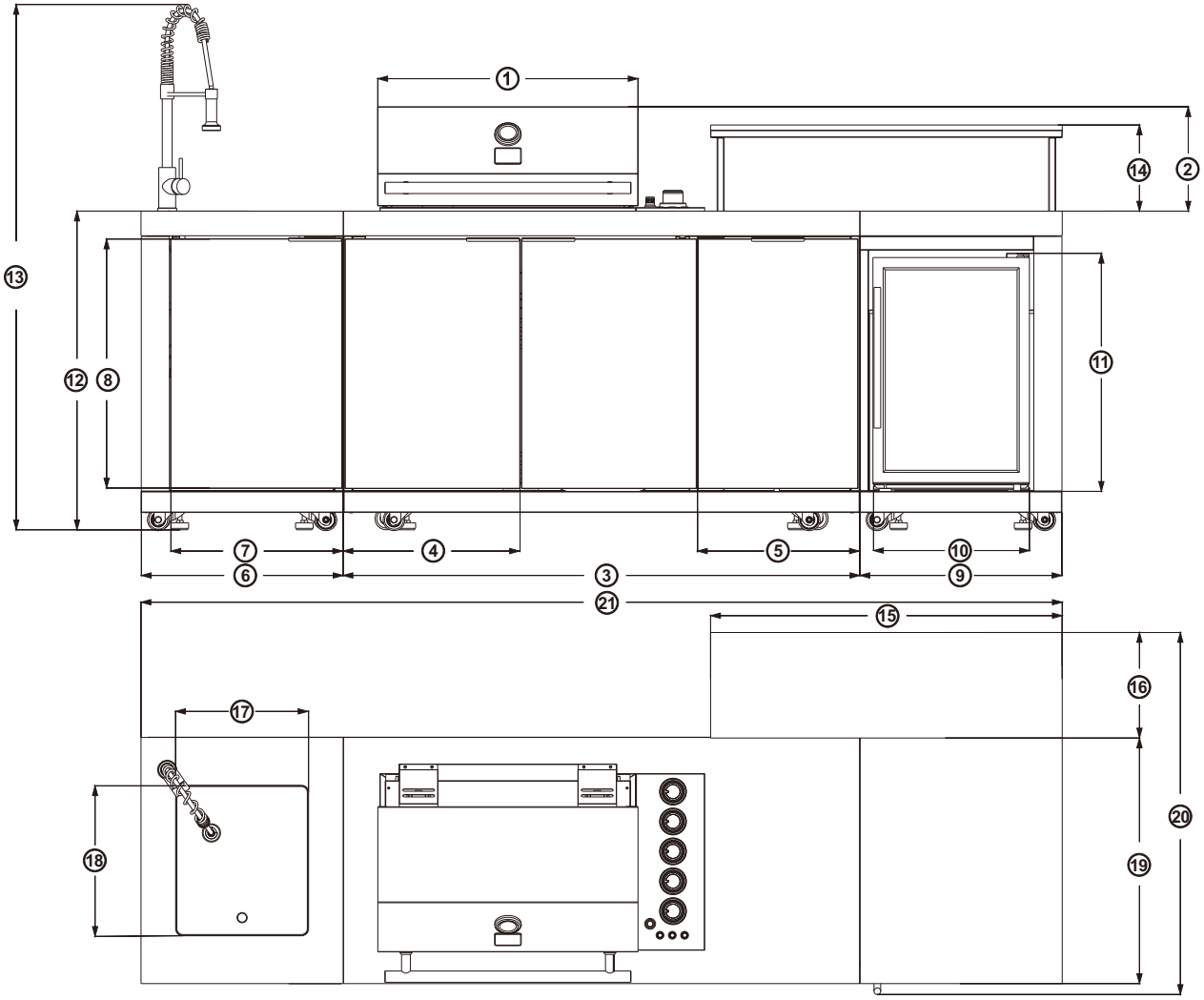

1	2	3	4	5	6	7	8	9	10	11
Length BBQ hood	Height hood	Length BBQ modular	Length BBQ cabinet door	Lengh gas cylinder cabintet door	Length sink modular	Length sink cabinet door	Height sink cabinet door	Length fridge modular	Length fridge	Height fridge
29 1/8”	11 11/16”	57 51/64”	19 39/64”	17 29/32”	22 41/64”	19 7/32”	27 61/64”	22 41/64”	17 33/64”	26 37/64”
74cm	29.7cm	146.8cm	49.8cm	45.5cm	57.5cm	48.8cm	71cm	57.5cm	44.5cm	67.5cm

12	13	14	15	16	17	18	19	20	21	
Height from floor to table	Overall height	Height bar from table to table	Length bar table	Depth Bar table	Length sink	Depth sink	Depth fridge modular table	Overal depth	Overall Length	
35 27/64”	58 21/32”	9 41/64”	39 23/64”	11 13/16”	14 57/64”	16 27/32”	27 9/16”	40 9/16”	103 5/32”	
90cm	149cm	24.5cm	100cm	30cm	37.8cm	42.8cm	70cm	103cm	262cm	

Cutout

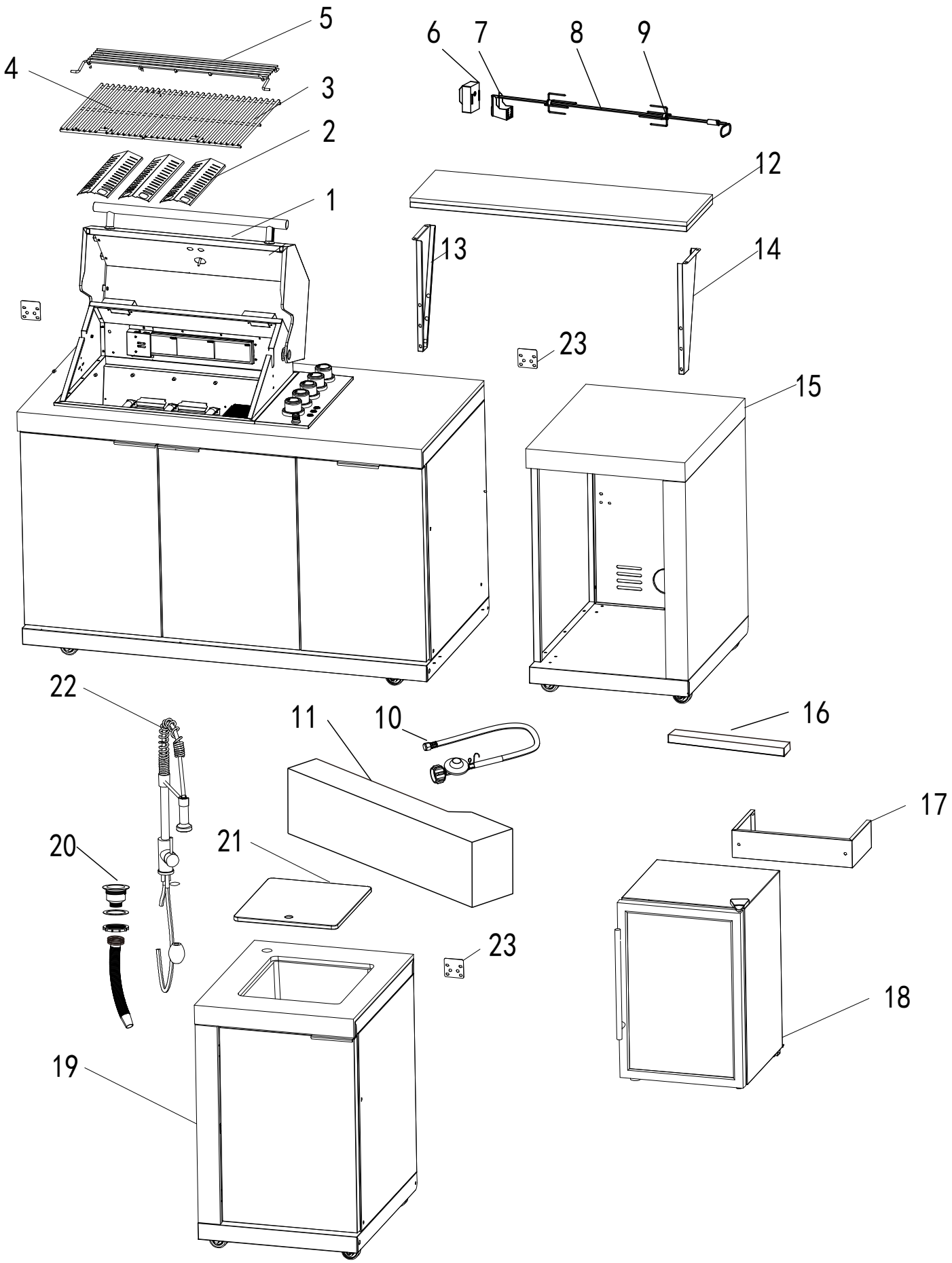

Name of Parts and Accessories

No.	Pic.	Part Name.	Qty
1	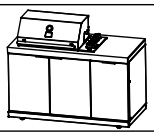	BBQ modular	1
2		Flame tamer	3
3	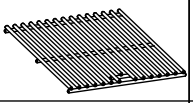	Small cooking grate	1
4	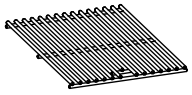	Big cooking grate	1
5		Warming grid	1
6		Rotisserie motor	1
7		Rotisserie left bracket	1
8		Rotisserie rod	1
9		Rotisserie fork	2
10	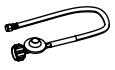	Hose and regulator (installed)	1
11	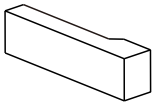	BBQ cover	1
12		Bar table	1
13	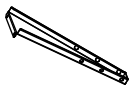	Bar table left bracket	1
14		Bar table right bracket	1

No.	Pic.	Part Name.	Qty
15		Fridge modular	1
16		Fridge decoration rod	1
17	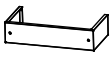	Fridge bracket	1
18	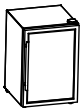	Right fridge	1
19	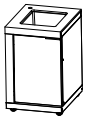	Sink modular	1
20		Drainer & pipe	1
21		Built in wooden chopper	1
22	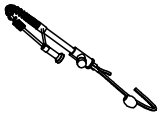	Faucet	1
23		Connector	2
24	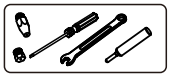	NG Orifices	1
25	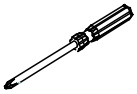	Cross screwdriver	1
26		M6x10	34

Control Panel Instruction

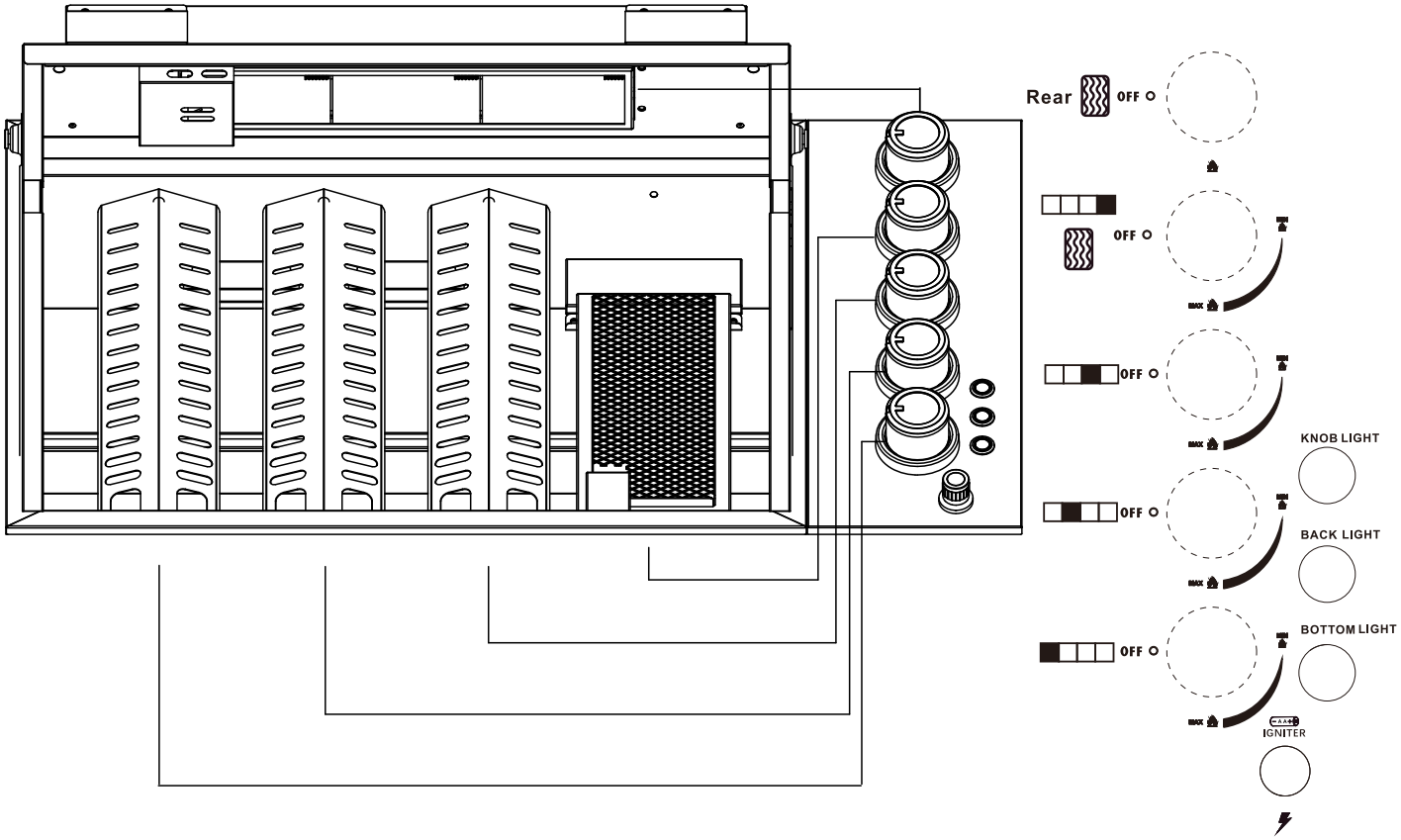

GRILL LIGHTING INSTRUCTIONS:

1.Read and follow the operator's instructions in owner's manual before lighting.
2.Open lid before lighting burner.
3.Make sure all control knobs are in the OFF position, open gas bottle valve according to instructions.
4.Select the burner to be lit. Push igniter while pushing knob in and turning to MAX position. Once burner is lit release igniter. Hold control knob in for 15 seconds before releasing knob slowly.
5.Repeat step 4 for lighting each burner.
6.If ignition does not occur in 5 seconds, turn the burner(s) OFF, wait 5 minutes, and repeat the lighting procedure.
7.Refer to the owner's manual for match lighting procedure.
8.To turn OFF, turn each control knob clockwise until it locks in the OFF position.

FOR OUTDOORS USE ONLY

NOTE: Turn off LP supply at the cylinder when appliance is not in use.

Warning:Accessible parts may be very hot, keep away from young children.

Installation

1.Place 3pcs of cooking grate on the top of burners in 4B gas BBQ.

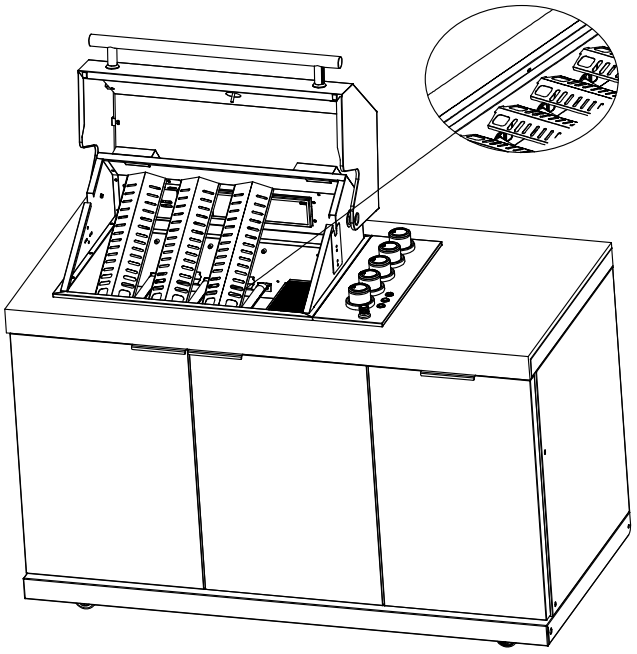

2.Place 2pcs of flame tamer above BBQ burner.

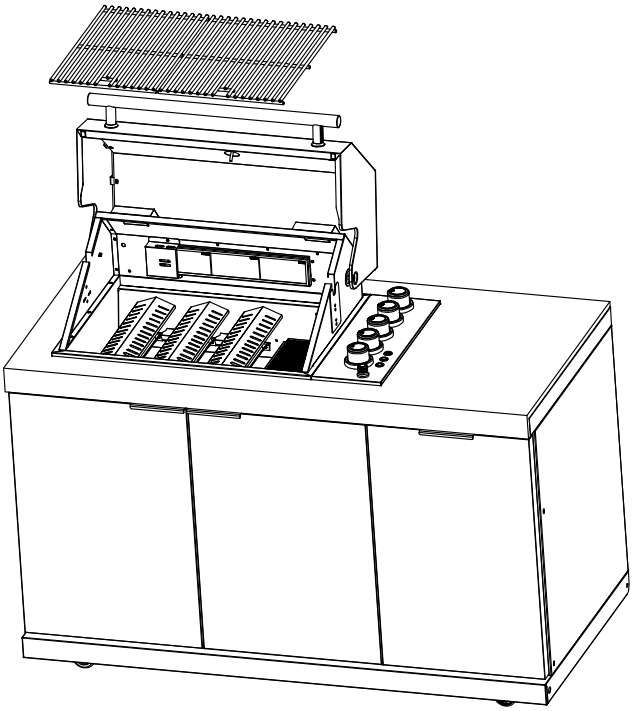

 M5X10 2pcs  M5nut 2pcs

3.(1)Insert the warming grid into two side holes.
(2)Fasten rotisserie brackets with 2pcs of M5x10 screws and nuts (preassembled).
Suggest screws on the third level. Take off warming grate when motor working.
Place the rotisserie rod into the motor hole.

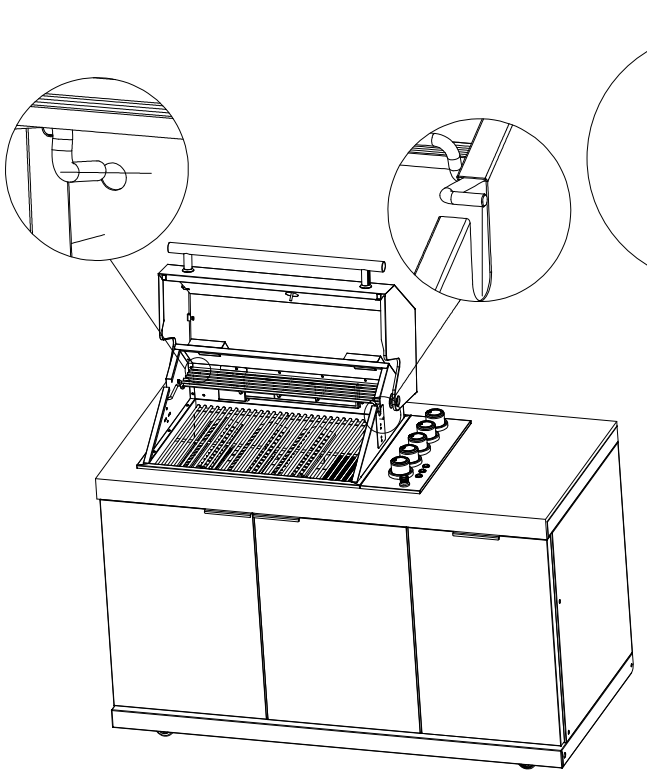

3-1

OR

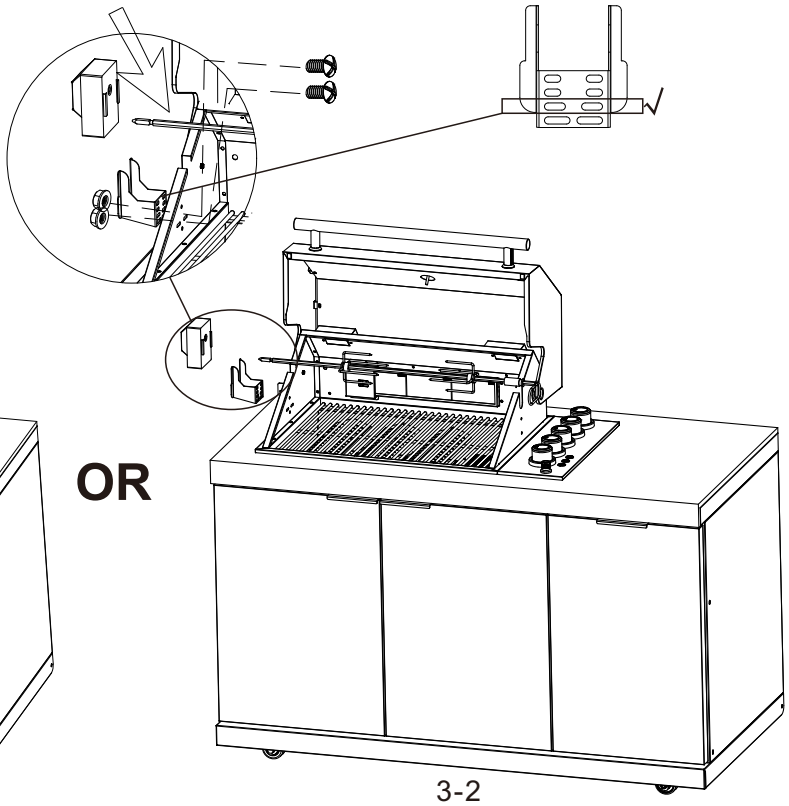

3-2

4.(1)Unscrew the back plate, assemble the drainer with washer on top, connector & pipe at the bottom
(2)Insert the heavy ball into the long wire then connect to short wire. Fasten faucet with washer on top, then washer at bottom with nuts.
(3)Place wooden chopper into the sink.

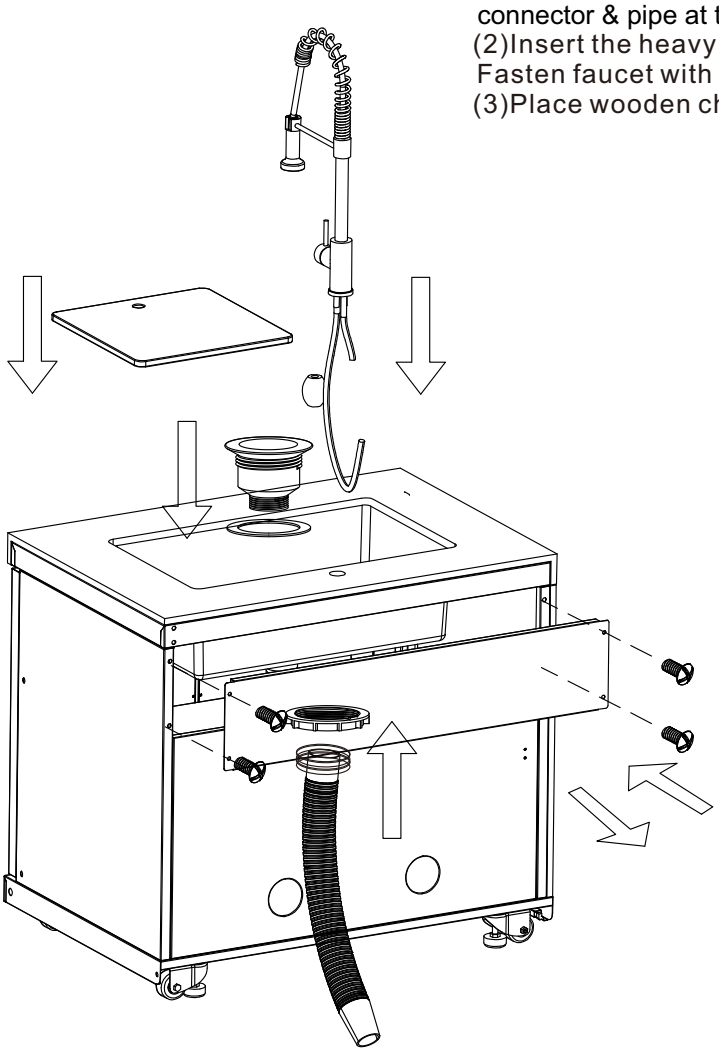

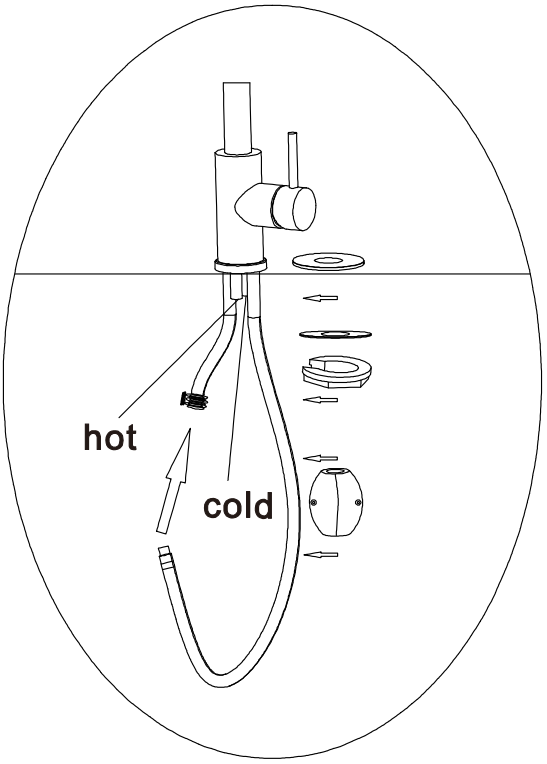

 M6X10 10pcs

5.(1)Fasten 1pc of M6x10 screw half in the rod right hole, then click the screw into fridge cabinet right plate hole , fasten the right hole and top hole by 3pcs of M6x10.
(2)Fasten the fridge & fridge bracket with 2pcs of M6x10, then
(3)Fasten two fridge brackets into the cabinet back plate with 8pcs of M6x10.

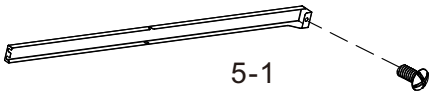

5-1(M6X10 4PCS)

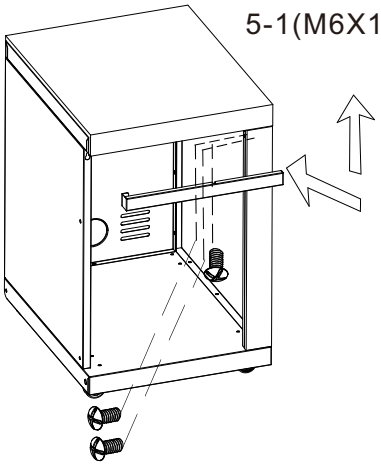

5-2(M6X10 2PCS)

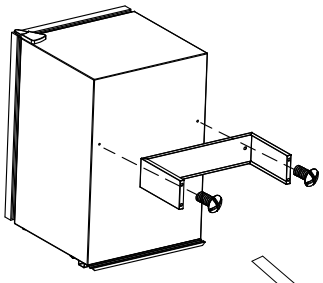

5-3(M6X10 4PCS)

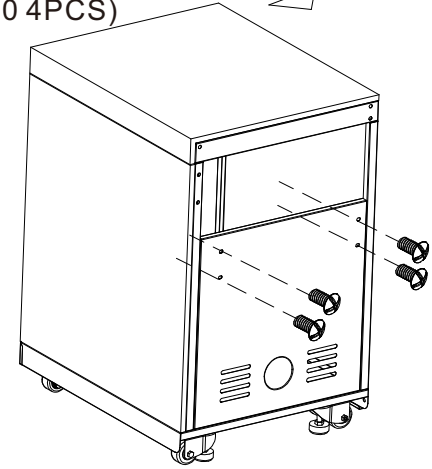

M6X10 4pcs

6.Connect each modular with 4pcs of M6x10 as picture shown.Insert light connectors into the terminal, then put connector into the left hole, leave white wire outside.

Warning : The front rod of BBQ left cabinet could be unscrewed , but it is not allowed to put gas cylinder inside, which should be placed in the right BBQ cabinet.

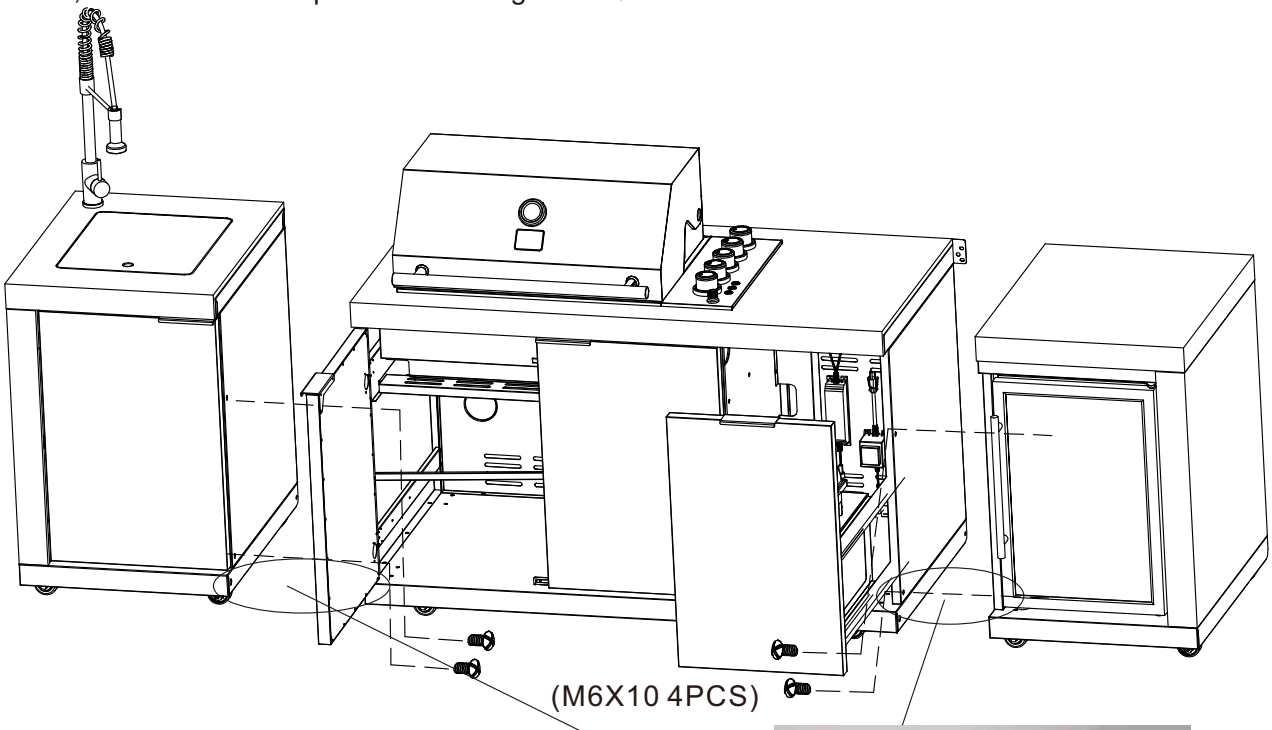

Insert the connector into the terminal then put connector into the left hole, leave white wire outside.

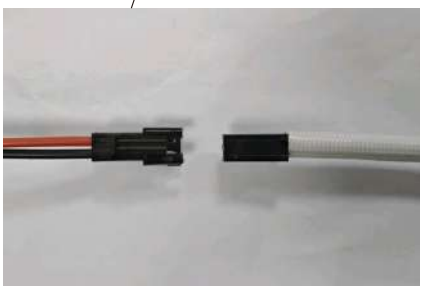

M6X10 20pcs

7.(1)Connect the back side of each modular with 2pcs of stainless steel small plates, fasten them with 8 pcs of M6x10.

(2)Fasten the bar table and brackets and fridge modular with 10pcs of M6x10.

(3)Fasten each modular at the bottom with 2pcs of M6x10.

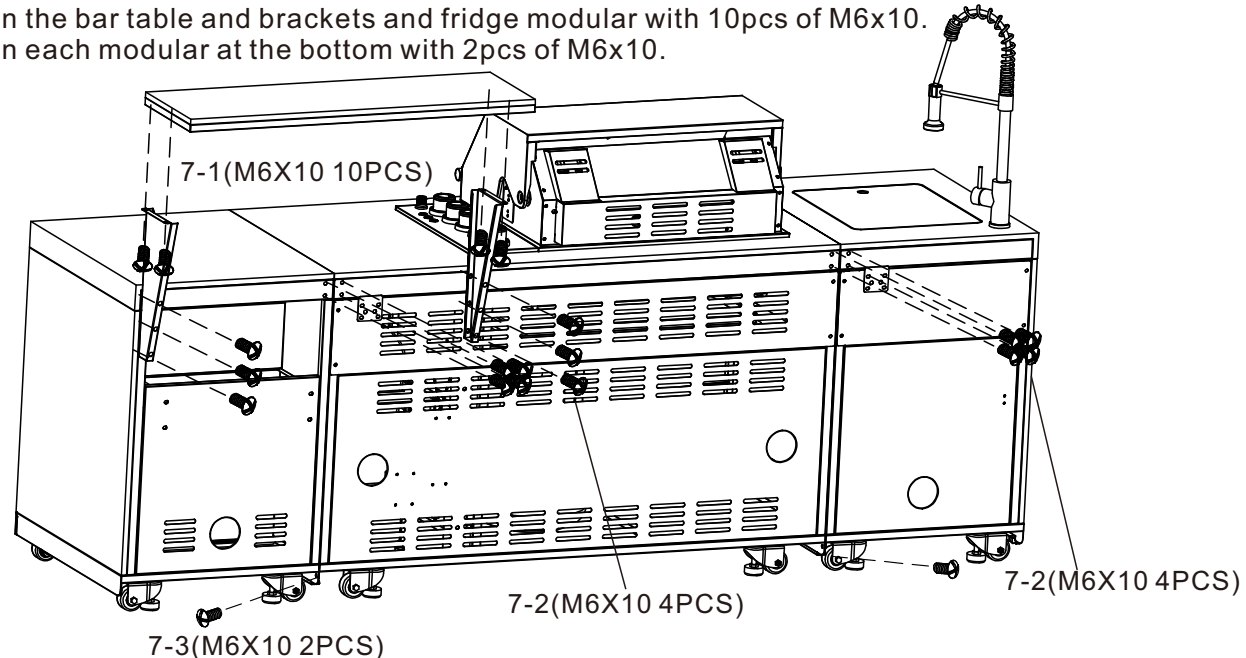

8.(1)Place gas cylinder into the gas holder.
(2)Turn to right to fix the gas cylinder.
(3)Use a S hook to hang over LPG hose and regulator.

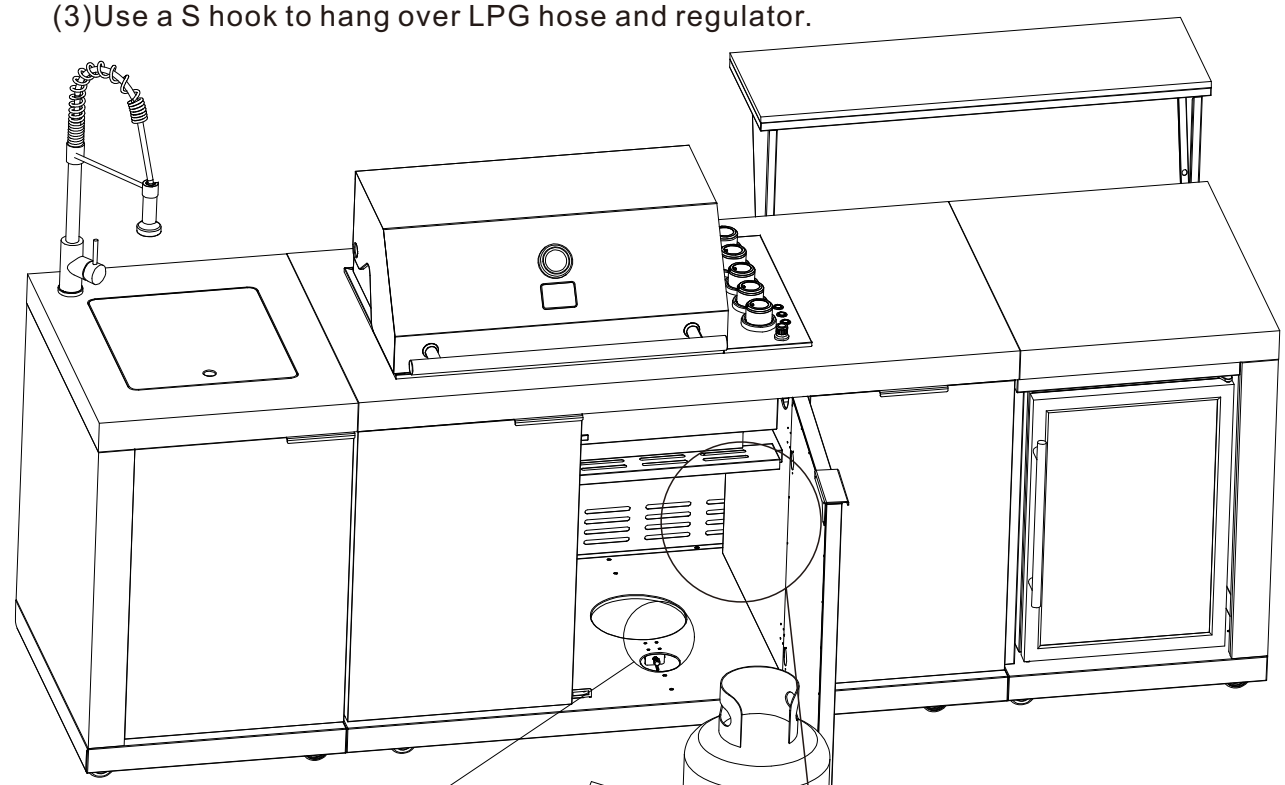

8-1

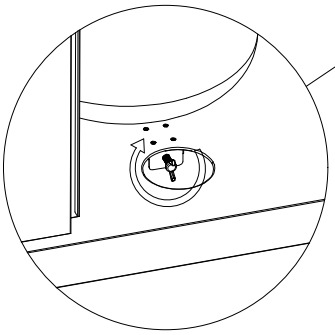

8-2

8-3

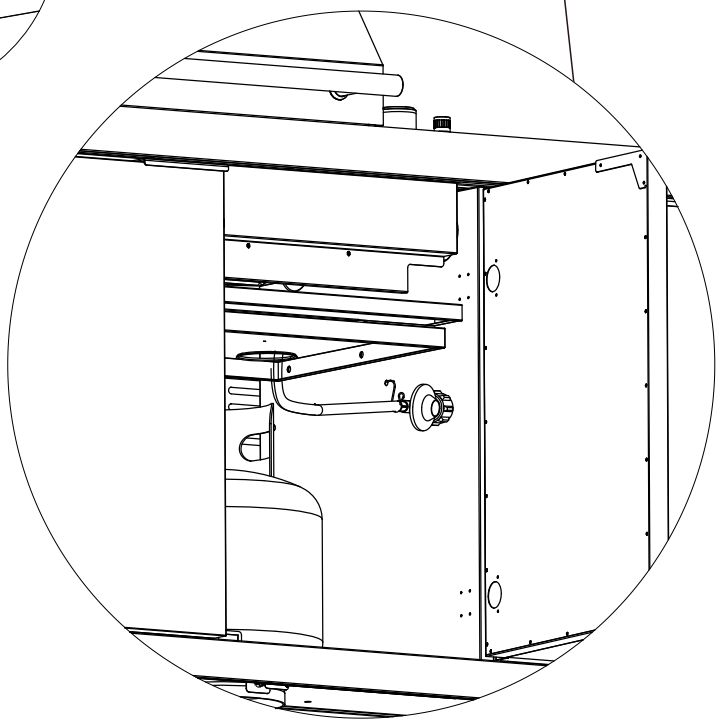

Adjustment of Door Hinge

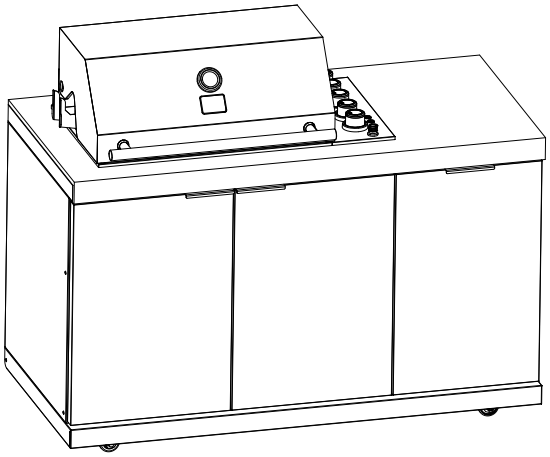

1.Left and right adjustment

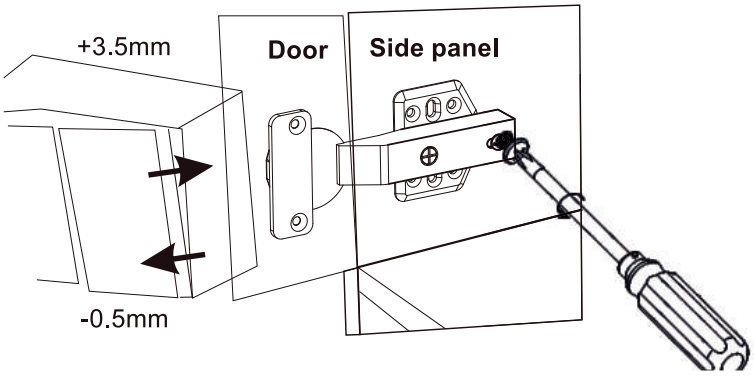

2.Depth adjustment.

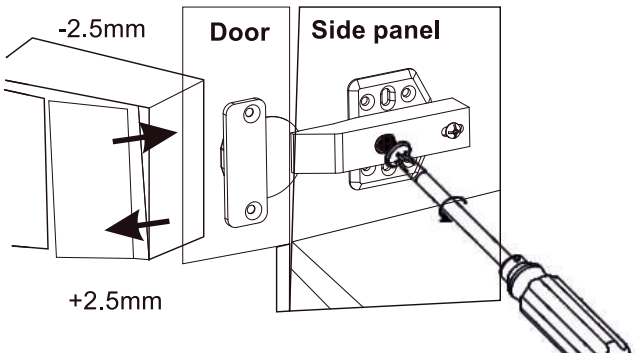

3.Up and down adjustment.

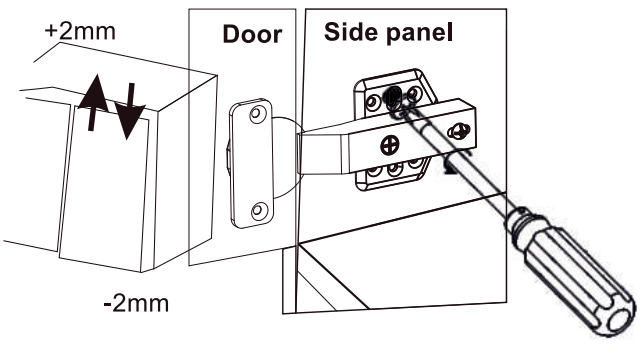

2. Connect the Gas Line to the Grill

Connecting the grill
connect the gas line to the grill using the appropriate connection for your gas type.



Other cylinders may be acceptable for use with appliance provided they are compatible with the appliance retention means and accompanied by illustration(s) depicting the cylinder mounted to the appliance utilizing the cylinder retention means and the point of contact between the cylinder and the retention means .

3. Connect to a Gas Source

Liquid Propane Connection

Use the pressure regulator and hose assembly supplied with the grill, or a regulator and hose assembly with the same specifications. Replacement LP regulator and hose must have a coupling nut that will connect to a QCC-1 cylinder valve on one end and a female fitting that will connect to a 3/8" tapered fitting on the grill manifold. See the figures right.

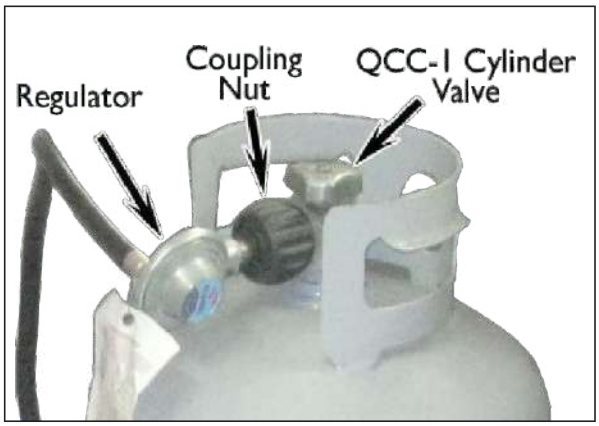

Connect the brass fitting to the manifold inside the grill. Do not use Teflon tape or plumber's dope. Do NOT remove the NG regulator from the manifold. Connect the coupling nut to the LP cylinder valve.

When you are finished connecting to the gas source, perform a leak test.

Natural Gas Connection

Connect the gas line to the NG stub-up inside the barbecue island, follow page since 28.
When you are finished connecting to the gas source, perform a leak test.

Leak Testing Procedure

Perform a leak test at least once a year whether the gas supply cylinder has been disconnected or not. In addition, whenever the gas cylinder is connected to the regulator or whenever any part of the gas system is disconnected or replaced, perform a leak test.

As a safety precaution, remember to always leak test your grill outdoors in a well-ventilated area. Never smoke or permit sources of ignition in the area while doing a leak test. Do not use a flame, such as a lighted match to test for leaks. Use a solution of soapy water.

1. Prepare a leak testing solution of soapy water by mixing in a spray bottle one part liquid soap to one part water.
2. Make sure all the control knobs are in the OFF position.
3. Turn on the gas.
   a. On natural gas systems, turn the main feed valve to the grill.
   b. On LP systems, turn the cylinder valve knob counter clockwise one turn to open.
4. Apply the leak-testing solution by spraying it on joints of the gas delivery system. Blowing bubbles in the soap solution indicates that a leak is present.
5. Stop a leak by tightening the loose joint or by replacing the faulty part with a replacement part recommended by the manufacturer. Do not attempt to repair the cylinder valve if it is damaged. The cylinder must be replaced.
6. Turn all control knobs back to the full OFF position.

If you are unable to stop a leak:

1. Turn all control knobs back to the full OFF position.
2. Shut off the gas supply to the grill and release pressure in the hose and manifold by pushing in and turning any of the control valves one quarter turn counter-clockwise.
3. On LP systems, remove the cylinder from the grill.
4. Call an authorized gas appliance service technician or an LP gas dealer.

Do not use the appliance until the leak is corrected.

Using Your Grill

Read all instructions before you operate your grill .

We recommend you wash your entire grill with soap and water prior to lighting it for the first time. Oils are used during the manufacturing process and some residual oil may still be on the stainless steel parts of your grill. Washing will reduce the possibility of discoloration. We also recommend you keep your grill covered when not in use. This will minimize the amount of dust and dirt that accumulates on your grill and extend the life of your grill.

Remember to use your grill safely by following these reminders:

- It is dangerous to use barbecue grills and side burners in any manner other than for what it is designed for.
- Do not use charcoal in a gas grill or side burner.
- Do not heat sealed containers such as cans or jars on grills or side burners. Explosion may result resulting in injury or death. Any sealed container, such as a pressure cooker, must have a properly operating pressure relieve valve to minimize explosion hazard.
- Never put combustible material such as paper, cloth, or flammable liquids on your grill at any time. Do not use grill, side shelves, cabinets, or any area around grill to store flammable materials.
- Never operate main burners and rear infrared convection burners at the same time. Excessive grill temperatures will result.

Basic Grill Operation

Before lighting, make sure all burner controls are off. Do not attempt to light the burners if the smell of gas is present. Check the connection with a soap and water solution after attaching the hose. For LP units, make sure there is gas in the tank and it is sitting upright. For natural gas units, make sure the shut off valve is on.

1. Make sure the drip tray is in place.
2. Light the grill burners using the instructions on the previous page.
3. Turn the control knob to HIGH and preheat the grill for 15 minutes. Close the top cover during the appliance preheat period.
4. Place the food on the grill and cook to desired completion. Adjust heat setting if necessary. You may set the control knob to any position between HIGH and LOW.
5. Allow the grill to cool and clean the drip tray after each use.

Do not leave the grill unattended while cooking.

Gas Cylinder Orientation

LP gas cylinder must be up oriented upright during operation for proper vapor withdrawl. Operating the grill with the cylinder on it side will allow liquid gas to flow into the regulator. Erratic gas flow will occur, resulting in possible flare-ups or explosion.





Warning

NEVER cover the entire cooking or grill surface with griddles or pans. Overheating will occur and burners will not perform properly when combustion heat is trapped below the cooking surface.

CAUTION: NEVER spray water on a hot gas unit. This may damage porcelain or cast iron components.

Lighting the Burners

Each time you light the grill, check the following:

- Inspect the hose before using the grill. If there is excessive abrasion or wear, or if the hose is cut, it must be replaced prior to using the grill. If you need a replacement hose, contact your dealer.
- Ensure the area around the barbecue is clear of flammable substances such as gasoline, yard debris, wood, etc.
- Ensure there is no blockage of the airflow through the vent space located below the face of the unit.
- When using propane gas, keep the special ventilation openings in the enclosure free and clear of debris.
- If connected to a propane cylinder, carefully inspect the rubber hose attached to the regulator before each use.
- Ensure the propane cylinder, regulator, and rubber hose are installed in a location not subject to heating above 125º F (51º C).
- Ensure the burner flames burn evenly along both sides of each burner with a steady flame (mostly blue with yellow tipping). If burner flames are not normal, check the orifice and burner for insects or insect nests.
- Ensure the in-line gas valve or gas cylinder valve is always shut OFF when the barbecue is not in use.
- Do not operate the side burner with its cover closed or the back burner with its cover installed.

Electronically Lighting the Burners

1. Open the hood.
2. Keep your face as far away from the burners as possible.
3. Press and rotate the burner knob counter clockwise past the light position to HIGH. You will hear a loud click as the electronic lighter produces a spark.
4. Listen for the sound of the gas igniting. If the burner does not light on the first try, repeat immediately.
5. If the burner does not light after three attempts, turn the control knobs to the OFF position. Wait five minutes until the gas clears before attempting to light it again.
6. Repeat the procedure or try the manual lighting procedure below.
7. Upon successful lighting, repeat the process on the other burners you wish to light.

Manually Lighting the Burners

8. To shut off the burners, rotate the knob and turn to OFF.
9. It is normal to hear a popping sound when the burners are turned off.

WARNING: Do not use standard matches or cigarette lighters to perform match lighting procedures. Serious burns can occur and lighters can explode.

1. Open the hood.
2. If you have just attempted to light the burner, allow five minutes for any accumulated gas to dissipate.
3. Slide out the drip tray from the grill.
4. Keep your face as far away from the burners as possible.
5. Light and insert a long stem match, holding it near the burner ports.
6. Push in and turn the control knob just past the LIGHT position to HIGH.
7. Listen for the sound of the gas igniting. If the burner does not light after five seconds, turn the control knobs to the OFF position. Wait five minutes until the gas clears before attempting to light it again.
8. If the burner does not light after several attempts see Troubleshooting Guide in the back of this manual.

Cooking with the Rotisserie

Plug in the rotisserie in any 120V outlet. The rotisserie motor has an ON/OFF switch that controls the single-speedThe rotisserie motor. rotates in both directions. You can change the direction by turning it off and turning it back on again.

The rotisserie cooks with the infrared back burner, which provides intense searing radiant heat. The location of the rotisserie and burner allows the placement of a rotisserie-basting pan (NOT included) beneath the food to collect juices and drippings for basting and gravy.

Before you can use the rotisserie, you need to mount the brackets and motor to the grill. See page 15 for instructions.

Loading food on the rotisserie rod

1. Hold the handle firmly while sliding one of the fork assemblies (prongs facing away from the handle) onto the rod.
2. Push the rod through the center of the food, then slide the other holder (prongs toward the food) onto the rod.
3. Center the meat on the rod and push the fork assemblies firmly together.
4. Tighten the thumbscrews.
5. To secure any loose portions of your meat, use butcher string (never use nylon or plastic string).
6. Place a basting pan under the food to collect the drippings.

Cooking with the rotisserie

1. Remove the warming rack.
2. Place the pointed end of the rotis rod into the motor and rest the threaded end on the support at the side of the grill. When the rod is pushed as far as possible into the motor, the grooved end of the rod should rest on the left side bracket.
3. If necessary, to offset unbalanced loads, slide the counter weight on to the rod. With the counter weight loose, allow the loaded rod to rotate and come to a stop. Now rotate the counter weight above the rod in a vertical position and tighten the thumbscrew. You can slide the counter weight away from or closer to the rotisserie rod as needed for balanced operation.
4. Light the infrared back burner. It will reach cooking temperature in about one minute. The orange/red glow will even out in about five minutes. The back burner flame can be adjusted to the level of intensity you prefer.

To ensure safe and proper maintenance, we recommend you follow these directions carefully.

Clean internal parts of the grill regularly as determined by the amount of use and foods cooked. The entire grill should be cleaned at least once a year.

In addition, keep the area around your grill clear and free from combustible materials, gasoline, and other flammable vapors and liquids. Do not obstruct the flow of combustion and ventilation air.

DISCONNECT ELECTRICAL SUPPLY BEFORE CLEANING ANY PART OF THE GRILL.

These instructions describe the best way to care for your stainless steel. They apply to grills and barbecue islands with stainless steel fixtures.

Although stainless steel grills will discolor and accumulate grime with regular use, they can keep their original shine with periodic cleaning. We strongly recommend using a surface protectant to prevent smudging and surface rust from accumulating.

The easiest way to clean the grill is immediately after cooking is completed. Doing so will extend the life of your grill, prevent grease fires, and present a pleasant appearance while you grill.

Stainless Steel Care and Cleaning

All exposed stainless steel surfaces require special attention if you want to keep them looking clean and bright. Following these simple instructions will help avoid scratching or damaging the finish and keep your stainless steel attractive.

Cleaning instructions for grill interiors, including racks and burners, are described after this section.

1 . Clean

Thoroughly clean stains, food, and grime using a sponge or damp cloth with warm water and a mild dish soap. Use Fantastik or Formula 409 to remove heavier soil.

2 . Rinse

Thoroughly rinse all surfaces and dry them completely with a clean towel. Do not allow stainless steel to air dry.

3 . Polish

We strongly recommend that you apply a surface protectant to all exposed stainless steel surfaces.

Spray a small amount of WD-40 or Sheila Shine on a piece of paper towel and rub with the grain over the surface of the appliance. Using a clean terry cloth or paper towel, polish the appliance by rubbing with the

Cleaning Products and Materials

DO NOT USE these common cleaning products and materials – they will damage the surface of your stainless steel.

- CLR
- Lime-Away
- Oven cleaner
- Cleansers such as Ajax or Comet
- Ammonia
- Bleach
- Chlorine
- Steel wool pads
- Wire brushes
- Scrapers
- Pumice

We recommend these products for cleaning your stainless steel:

- Mild dish detergent such as Dawn
- Formula 409
- Fantastik
- Instant Rust Out (exterior ONLY)
- WD-40 (exterior ONLY)
- Sheila Shine (exterior ONLY)

We have had best success with Instant Rust Out, but WD-40 works very well too. Instant Rust Out is available in some hardware stores. WD-40 is widely available.

Baking soda, lemon oil, olive oil, vinegar, or club soda can also be effective for cleaning light soil on all stainless steel surfaces.

Do not use steel wool or wire brushes to scrub your grill.

For light soil, use a damp sponge or cloth.

For heavier stains, use a Scotch-Brite scrubber or similar product.

grain until excess liquid is removed and the surface shines. It should not be oily to the touch, however some residue is acceptable.

Furniture polish, such as Old English, can be effective for polishing stainless steel and protecting the surface.



Caution

Do not use Instant Rust Out, WD-40, or Sheila Shine near food or on food preparation surfaces as it is a health hazard. This includes the interior of the grill, grill racks, stainless steel sinks, the inside of cabinets, warming drawers, and ovens.



Fire Hazard

NEVER spray WD-40 or Sheila Shine near an open flame! These products are extremely flammable while in their aerosol forms.

Rust Removal

It is a common misconception that stainless steel does not rust. It does not stain, corrode, or rust as easily as ordinary steel (it *stains less*), but it is not stain-proof. If not properly protected and maintained, it can corrode, pit, and discolor.



Important

Because salt will accelerate rust and corrosion, grill or barbecue island owners who live near the beach need to be diligent in maintaining their stainless steel hardware. You need to clean and polish your stainless steel frequently, apply a protectant, and ensure water does not collect and puddle.

There are two methods of rust removal we recommend:

1 . Rust removal with Instant Rust Out:

Spray exterior stainless steel surfaces with Instant Rust Out. Let it stand for about 30 seconds, then wipe with a clean cloth. Apply a second time if necessary.

Instant Rust Out will leave a white residue which can be rinsed off with water. Wipe the grill dry with a clean cloth and apply Sheila Shine or WD-40 as a surface protectant.

2 . Rust removal with WD-40 or Sheila Shine:

Spray exterior stainless steel surfaces with WD-40 or Sheila Shine and wipe down with a dry cloth or paper towel until surface is free of rust. If there is significant rust or corrosion, use a Scotch-Brite scrubber.

Both of these products will act as a surface protectant and help resist smudges, stains, and rust.



Caution

Although nitric acid (also called aqua fortis) can be effective for rust removal, it is a highly corrosive chemical. Because of the potential for injury or damage to your stainless steel, we do not recommend using nitric acid.

Cleaning the Interior of Your Grill

1. Thoroughly clean stains, food, and grime using a sponge or damp cloth with warm water and a mild dish soap. Use Fantastik or Formula 409 to remove heavier soil.
2. Thoroughly rinse all surfaces and dry them completely with a clean towel. Do not allow water to accumulate and puddle on stainless steel. Water from various sources such as garden hoses contains iron which will give the appearance of rusting on stainless steel. If allowed to stand for long periods of time on stainless steel, it will cause pitting.
3. The racks, flame tamers, and flavor bars can all be removed for cleaning and are dishwasher safe.

Burners

Spiders and small insects occasionally inhabit or make nests in the burner tubes, obstructing the gas flow. Sometimes this results in a type of fire in and around the gas tubes called "flashback". To reduce the risk of flashback, this procedure should be followed at least once a month or when your grill has not been used for an extended period of time.

IMPORTANT: Prior to starting this procedure, turn OFF all of the gas control knobs, shut off the fuel supply, and disconnect the fuel line.

The burners can be removed by removing the locking pins and lifting them out. The locking pins

are located under the grill toward the back. They are used to keep the burners in place during shipping and are not necessary to operate your grill. Remove burners from the grill by carefully lifting each burner up and away from the gas valve orifice.

Use a wire brush to clean the outer surface of each burner to remove food residue and dirt. Clean any clogged ports with a stiff wire such as an opened paper clip.

Inspect each burner for damage (cracks and holes). If any damage is found, discontinue grill usage until you replace the burner.

Upon reinstallation, inspect the gas valve orifices for cleanliness and condition and the location of the igniters. When you replace the burners, you do not need to replace the locking pins.

Cooking Grates

Use a solution equal parts detergent and hot water just as you would for any cooking equipment. A stiff wire brush or steel wool may also be helpful in removing grime and food deposits.



Note Do not use a wire brush or stainless steel on any other part of your grill or any other stainless steel surface except the cooking grates or the griddle!

Drip Pan

The full width drip pan will collect grease from the main grill area. The pan should be cleaned after every use to avoid the possibility of a grease fire. Be sure to allow the drip pan to cool prior to cleaning. You may clean the drip pan with a solution of warm soapy water. Make sure to rinse thoroughly to avoid staining.

Griddle

To prevent burns or injury, make sure the griddle is completely cool before cleaning.

The griddle is made from non-magnetic, 304 grade stainless steel. There are various stainless steel cleaners available. Always use the mildest cleaning procedure first, and always scrub in the direction of the grain. Use soapy water for most cleaning. A non-abrasive scrubber may also be helpful in removing grime and food deposits. Steel wool may be used for especially difficult spots. Wipe all areas dry before storing.

Steam Cleaning Your Grill

Steam cleaning the interior of your grill is very effective and will not void your warranty. Portable hand-held steam cleaners are inexpensive and do not require chemicals. You can steam clean all parts of your grill, including the burners. When you are finished, make sure you wipe all surfaces down.

If you spray the burners, ignite them and let them burn for about 10 minutes to prevent any water from accumulating inside them.

Covering Your Grill

When not in use and after cooling, cover your grill with our full length, zippered side canvas cover. (See your local Forno dealer for details.) The cover will help protect your grill from detrimental effects of weather and environmental pollutants. Never put a cover on a hot grill. Allow the grill to cool before covering.

Problem: **Plugged orifice**

Solution: Unplug the orifice as follows:

- Remove cooking grills, flame tamer and grease tray.
- Remove burners from the bottom of the firebox by pulling the locking pin from beneath the burner peg using a standard screwdriver or needle nose pliers.
- Carefully lift each burner up and away from the gas orifice.
- Remove the orifice from the control valve.
- Gently clear any obstruction with a fine wire.
- Reinstall the orifice, reinstall the burners over the orifices, and seat each burner peg into position hole at the bottom ledge of the firebox.
- Replace cooking components and grease collectors.

If an obstruction is suspected in the control valve, contact your local dealer for assistance.

Problem: **Misalignment of Igniter on Burner**

Solution:

- Check for proper position of the electrode tip, which should be pointing forward towards the front of the burner and free of grease to allow proper sparking.
- The ignition wire should be connected firmly to the valve ignition device and electrode. Replace the ignition wire if it is frayed or cracked.
- With the gas supply closed and all control knobs set to the off position, check each position igniter individually for the presence of a spark at the electrode. Push each knob in fully and rotate it about 1/4 turn to the left (counter-clockwise) until you hear a loud click. The trigger hitting the strike block should produce a blue spark at the electrode tip. Return control knob to the off position before checking the next igniter.
- While the grill is still hot, wait for a minimum of five minutes before commencing re-ignition. (This allows accumulated gas fumes to clear.) If all checks / corrections have been made and the gas grill still fails to operate properly, contact your local Forno dealer.

Problem: **Flashback**

Solution: When fire occurs in and around the burner tubes, immediately turn off gas at its source and turn the control knobs clockwise to the 'OFF' position. Wait until the grill has cooled off and then clean the burner tubes and burners as described on page of this manual.

Natural gas conversion

- Make sure you have converted the grill for natural gas before connecting the gas line to the requlator.
- When converted to natural gas, the NG gas label needs to be replaced with a ULPG gas label.
- Where a mobile appliance is to be connected to a fixed gas supply via a flexible hose connection, a restraining tether of adequate strength shall be fixed to the appliance and be suitable to be fixed to the wall within 50 mm of each connection point. The length of the tether shall not exceed 80% of the length of the hose assembly.
- WARNING! FAILURE TO HEED THESE WARNINGS COULD RESULT IN A FIRE OR EXPLOSION THAT COULD CAUSE SERIOUS BODILY INJURY, DEATH OR PROPERTY DAMAGE.
- Natural Gas Conversion must be performed by a QUALIFIED GAS TECHNICIAN ONLY. The QUALIFIED GAS TECHNICIAN should ensure compliance of local codes, including but not limited to, requirements and installation of grill regulator.

DO NOT ATTEMPT TO CONVERT YOURSELF. Improper conversion could result in a gas leak which could cause a fire or explosion and cause serious bodily injury, death or property damage. Leaks due to improper conversion could occur immediately or slowly over time. If you hear any unusual noises or leaks, smell gas or unusual odors, or notice anything unusual with the operation of your gas appliance after the installation, immediately shut off the gas supply and discontinue use until the appliance is repaired by a QUALIFIED GAS TECHNICIAN.

Below parts are needed for natural gas conversion:

INCLUDED

#Tools
#7 mm Nut Driver
#Straight screwdriver
#Cross screwdriver
#Anaerobic adhesive

Some of the following accessories need to be purchased by the customer at the local supplier:

#10 ft(3.0m)Natural Gas Hose
#4”Water Column Regulator with Hose

NG Orifices

A x3pcs	**B** x1pc	**D** x1pc
(ϕ1.40)	(ϕ1.45)	(ϕ1.53)(S7)

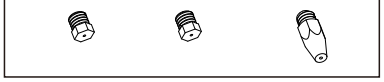

Tools

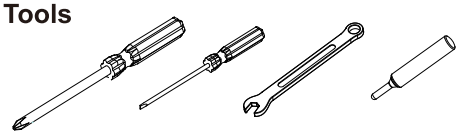

1pc 1pc 1pc 1pc

Tools will be needed for gas conversion

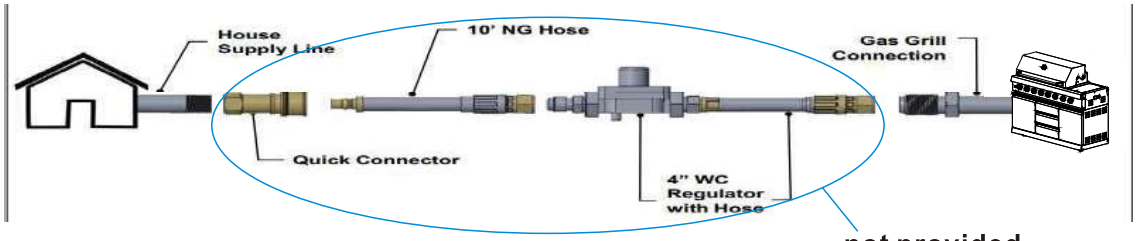

not provided

LG to NG step

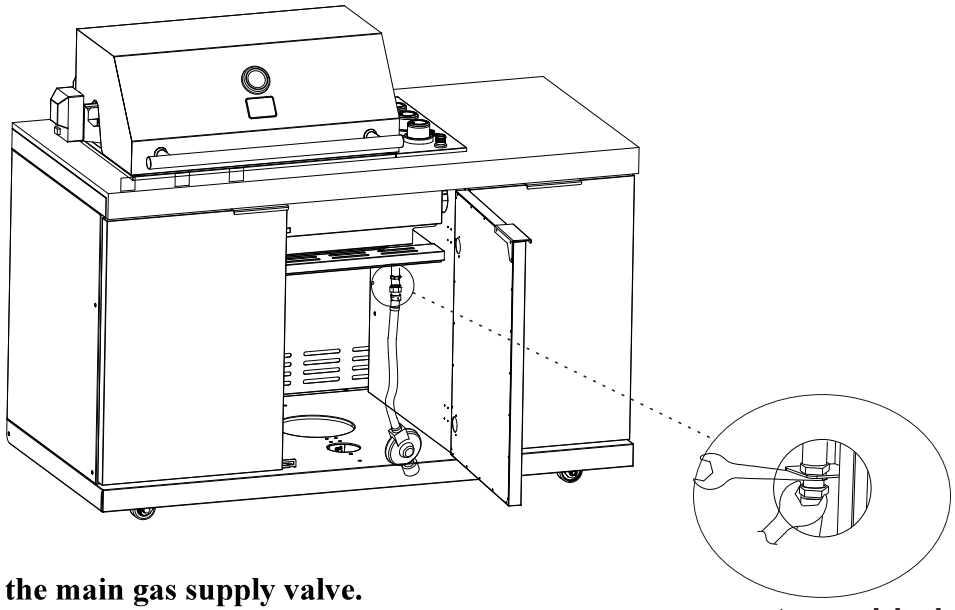

1. Turn off the main gas supply valve.
2. Disconnect LP gas fuel tank.
3. Turn off all burner control valves.
4. Remove the LP gas fuel tank from the grill cart.
5. Use an adjustable wrench to remove the LP regulator from the manifold.
6.Use an adjustable wrench to install the Natural gas regulator hose to the manifold and secure

The inlet is 3/8 SAE Flare with 5/8-18 UNF threads. The Natural Gas regulator thread is 1/2" BSP.

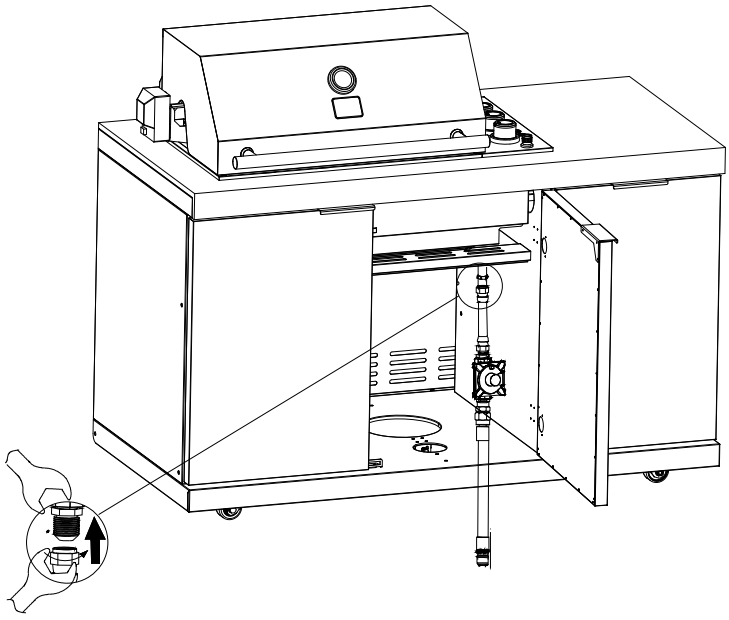

1.Connect the brass connector on one end of the 10 ft (3.0m) PVC flexible gas supply hose to the Natural gas pressure regulator

2.Connect the quick connector on the other end of the 10 ft (3.0 m) PVC flexible gas supply hose to the rigid Natural gas supply pipe.

3.Please do leak test after conversion

Loosen the screws and remove the back burner guard

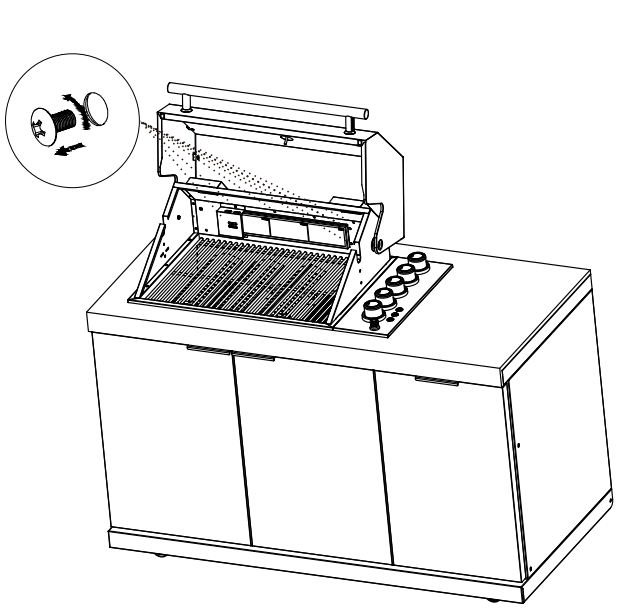

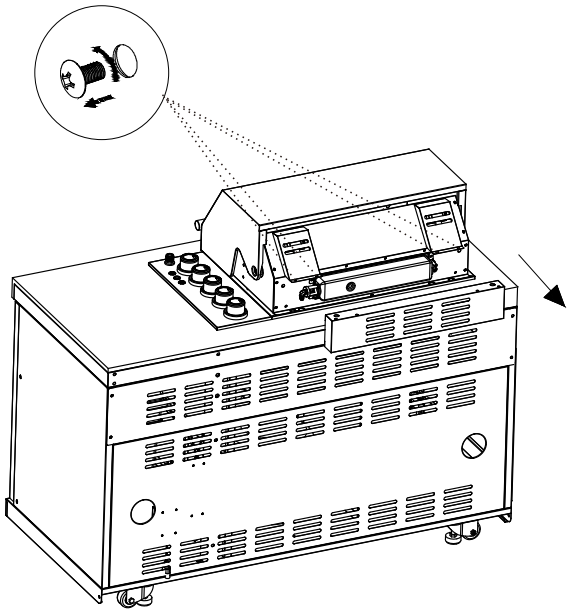

Remove the LP nozzle of the back burner from the back of the barbecue and replace it with an NG nozzle and anaerobic adhesive, screw back rear burner guard

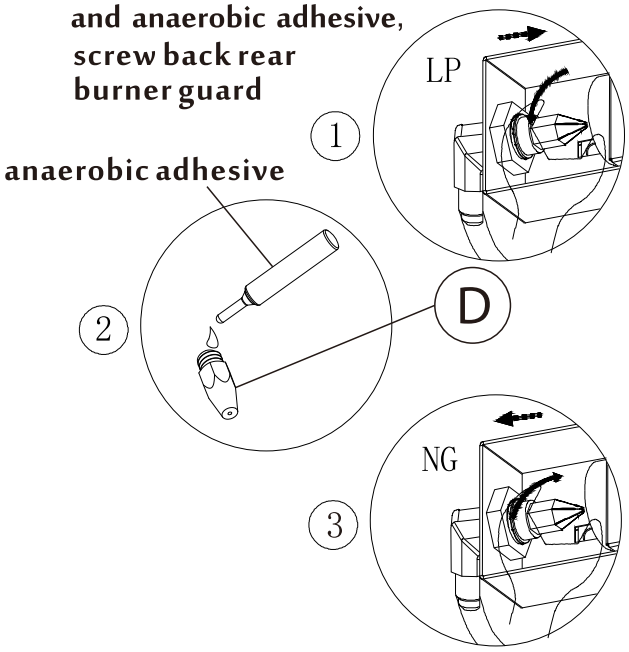

NG Orifices

A x3pcs	**B** x1pc	**D** x1pc
(ϕ1.40)	(ϕ1.45)	(ϕ1.53)(S7)

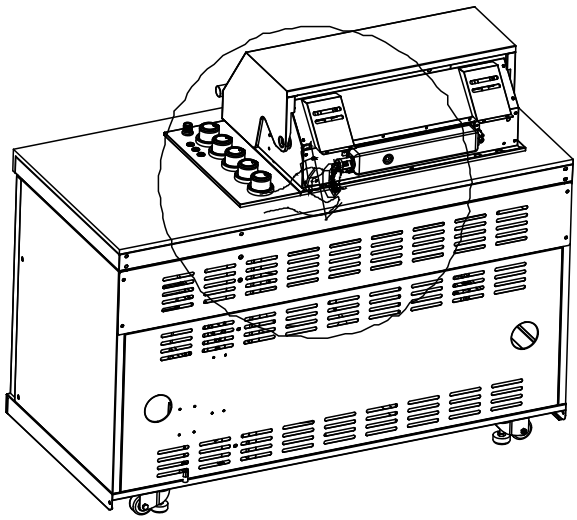

Natural gas conversion

1.Take out the knobs and loosen the screws of knob base with cross screwdriver, leave 2pcs of each control panel untouched.
2.Use straight screwdriver to the holes to loosen the adjust crew of the valve, adust to in the same level. One turn out (360°) from fully in. (only for main burner)
Bottom level is for LPG function, top level is for NG function.
3.Screw back all knob base, the left 2pcs repeat procedure 2.
4.Screw back all knob bases, insert all knobs back.

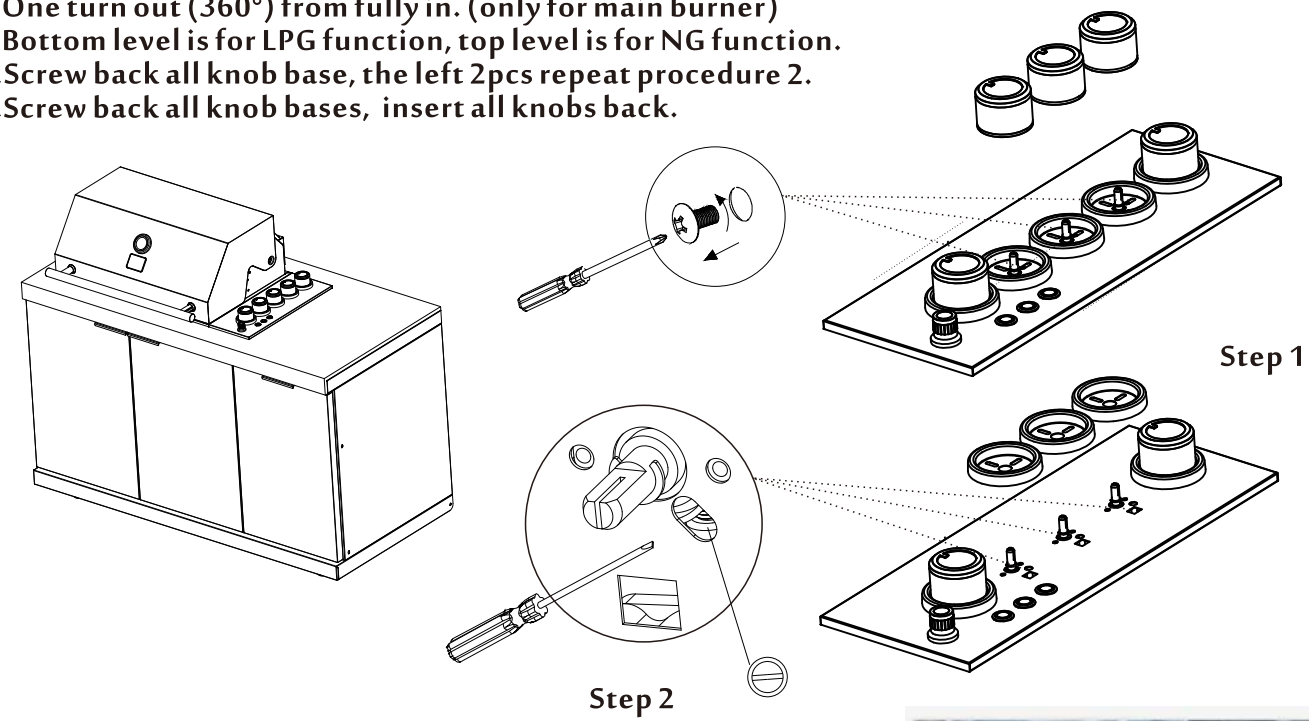

Step 1

Step 2



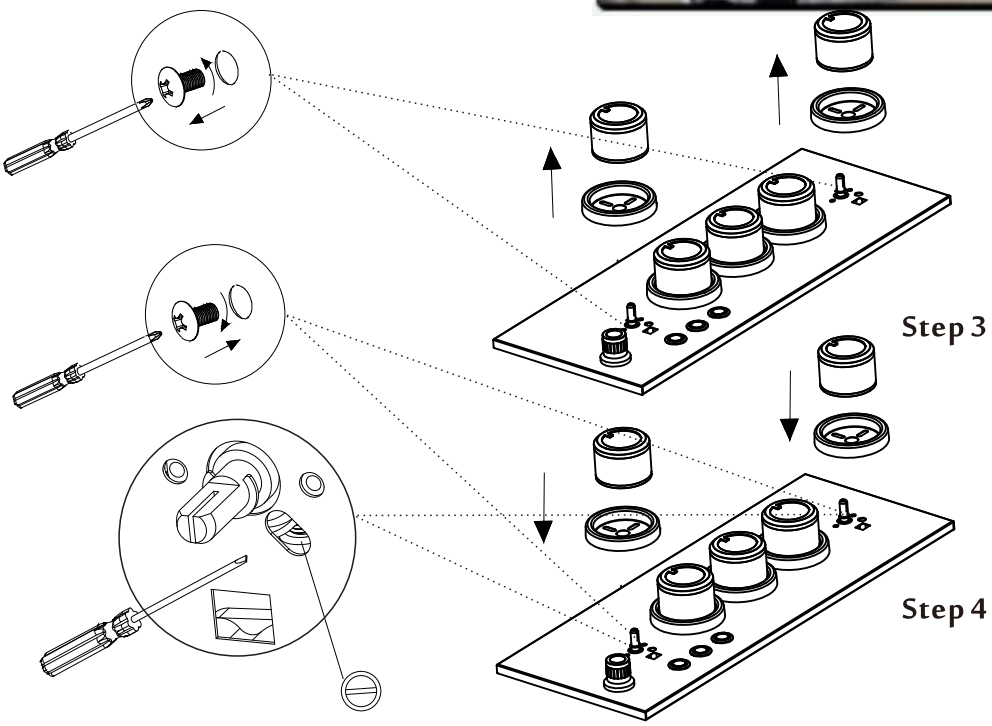

Step 3

Step 4

Natural gas conversion

Take out the drip tray

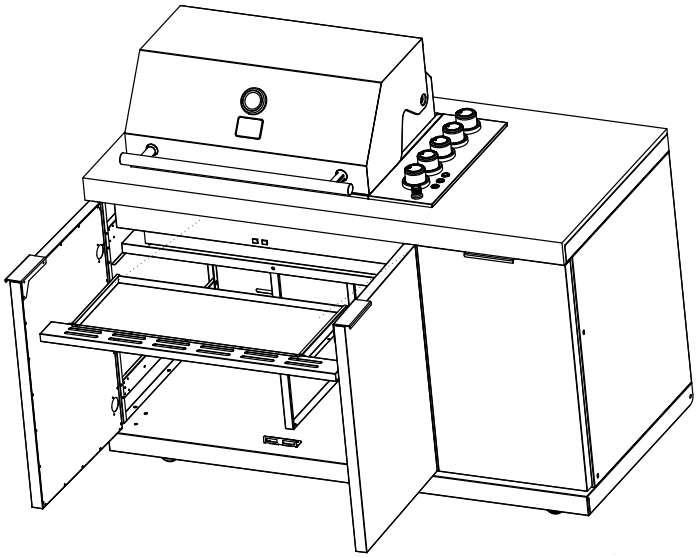

Unscrew the valve cover

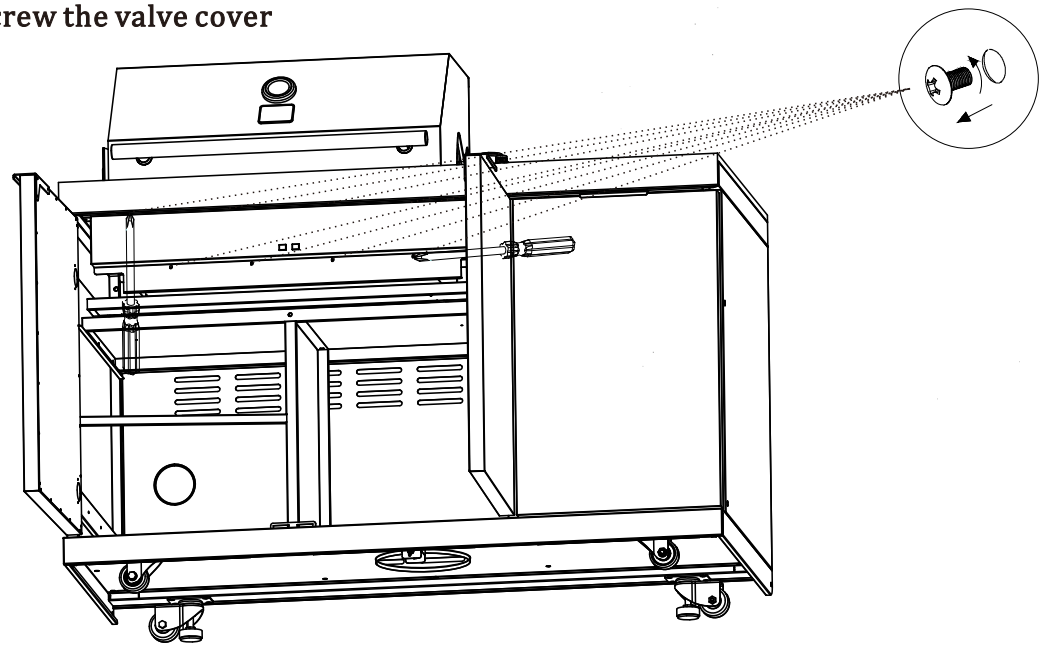

Unscrew the nozzle bracket

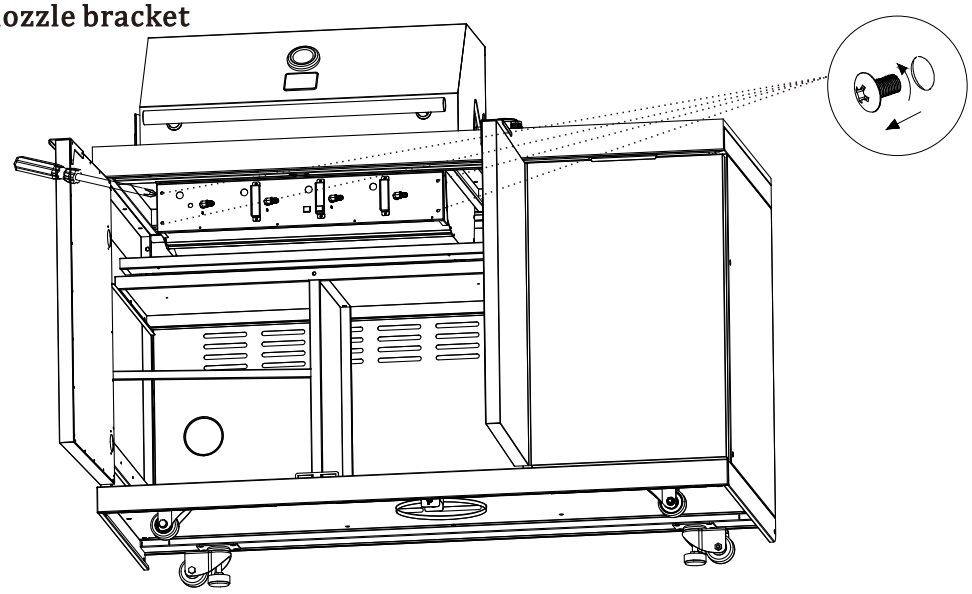

Natural gas conversion

Use wrench change the LP nozzle to NG nozzle,with anaerobic adhesive forsealing (only for main burner)

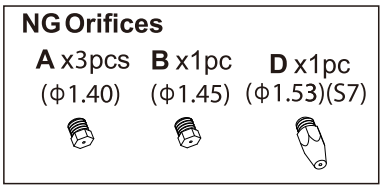

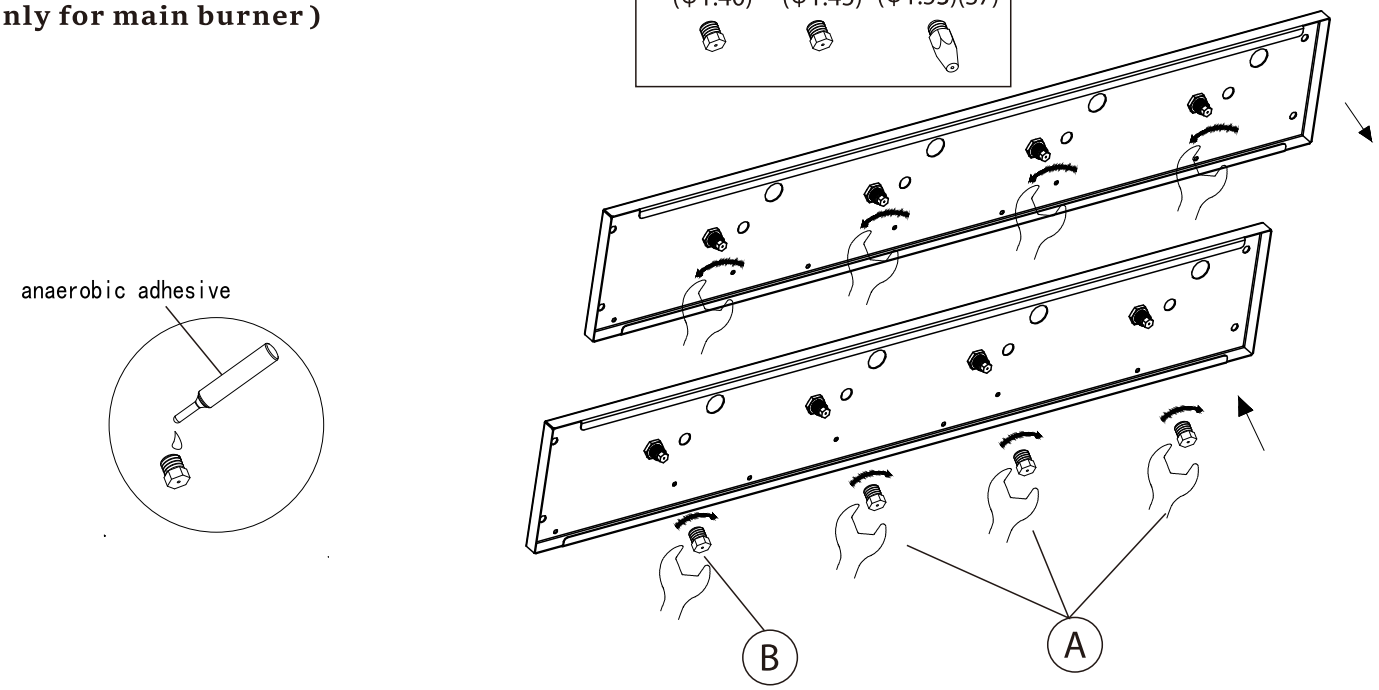

After that , assembly it back :

1.put the hose of gas connector in the right side,connect infrared burner hose, use spanner to screw it, use soap water to test leakage

2.put the whole panel into the BBQ, screw back 4pcs screws

3.check all the burners one by one are fixed

4.Put back all the knobs.

5.Use soap water to test leakage before use, try to burn the burner again.

After conversion to natural gas, the product must be secured with a chain and cannot be moved.

A restraining chain or wire of adequate strength shall be fixed to the apploance and the wall with 50 mm of each connection point. The length of the chain or wire shall not exceed 80% of the length of the hose assembly.

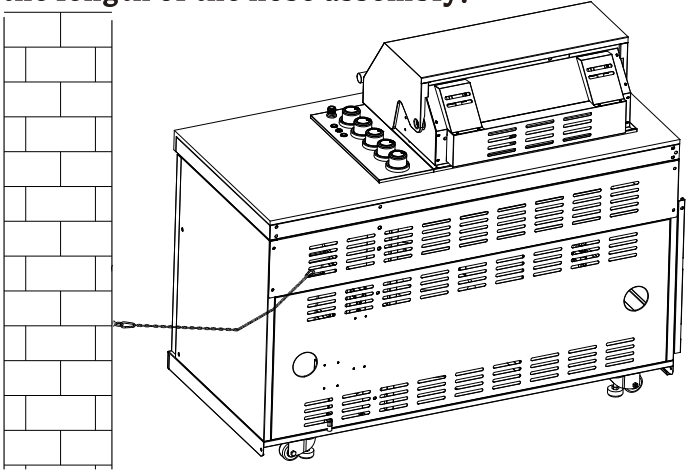

Sear Zone Infrared Burner

The Sear Zone infrared burner can be used in place of any regular burner. Producing intense infrared heat, it cooks quickly with searing heat to seal in juices. (Note: The Sear Zone infrared burner is NOT the same as the infrared back burner used with the rotisserie.

The burners in these grills are rectangular shaped ceramic, stainless or Inconel units with approximately 300 gas jets that reach a temperature between 1200° and 1400°. At these temperatures, you can truly sear food. These burners allow the cook to achieve white hot charcoal temperatures in 3 minutes, and maintain that temperature for as long as the cook needs to.

As the burner is heated to a very hot temperature, it starts to emit infrared radiation which cooks food and is independent of the surrounding air temperature. Using infrared heat to cook will make your foods taste more flavorful as the high heat locks in the moisture and natural juices. The thing to remember when cooking on infrared burners is to keep the grill lid open, sear for the appropriate short time, if the burner is left on high, you will burn everything. However, using your heat/time relationship and experience, you can cook anything and everything: meat, chicken, fish and vegetables. These grills heat in 3 minutes and food cooks in half the time of ordinary grills. And because of the consistent heat, the cooking times are unaffected by the air temperature because you are not heating the air to cook like with conventional burners. So a steak cooks the same in the winter as in the summer! Just remember your time and temperature relationship.



What are the Advantages of Infrared Grilling?

·Great at searing meat as it maximizes flavor - Infrared griing means your food Will retain up to 35% more of its natural juiceswhich will maximize flavor.

- An infrared grill takes little time to heat up and leads to quicker cooking times.
- An infrared grill is easy to clean as food particles left behind will turn to ash when the grill is on high.
- This grll will save you money as they are more energy-efficient as they burn less gas than other traditional gas grils.
- Fewer flare-ups from grease and food particles.



What are the Disadvantage of Infrared Grilling?

- Food can burn due to the intense heat.

Tips for infrared grilling:
1.Fire up your grill.
Turn on the gas， your infrared burner will heat up quickly, in just one to two minutes, cutting the grill time down.
2. Place the meat on the grate above the infrared burner.
Wait about one minute, then flip the meat and sear the other side. Infrared burners will reach high temperatures so, it's best to use thick cuts of meat such as steaks and pork chops. Try to avoid using thinner cuts like fish and vegetables as they tend to char.
3. Finish cooking the meat.
You have two options on how you can complete your dish.
First, leave the meat on the infrared burner, flipping it every 30 seconds to one minute until it's done.
The meat will take no more than 4 to 5 minutes to cook with this method. Be careful using this method, as it will be much easier to overcook the meat.Second, you can move the seared meat to the non-infrared side of the grill and finish it off the traditional way. The meat will take a little longer to prepare, about 9-10 minutes, however it will be easier to control.
4. Remove the meat from the grill and enjoy.
Clean up of your infrared burner is a snap!
The burner reaches such a high temperature that most drippings evaporate as soon as they hit the grill burner.

Warranty

THERE ARE NO EXPRESS WARRANTIES OTHER THAN THOSE LISTED AND DESCRIBED ABOVE, AND NO WARRANTIES, EITHER EXPRESS OR IMPLIED, INCLUDING, BUT NOT LIMITED TO, ANY IMPLIED WARRANTIES OF MERCHANTABILITY OR FITNESS FOR A PARTICULAR PURPOSE THAT SHALL APPLY AFTER THE EXPRESS WARRANTY PERIODS STATED ABOVE, AND NO OTHER EXPRESS WARRANTY OR GUARANTEE GIVEN BY ANY PERSON, FIRM OR CORPORATION WITH RESPECT TO THIS PRODUCT SHALL BE BINDING ON FORNO. FORNO SHALL NOT BE LIABLE FOR LOSS OF REVENUE OR PROFITS, FAILURE TO REALIZE SAVINGS OR OTHER BENEFITS, TIME AWAY FROM WORK, MEALS, LOSS OF FOOD OR BEVERAGES, TRAVELING OR HOTEL EXPENSES, EXPENSES TO RENT OR PURCHASE APPLIANCES, REMODELING/CONSTRUCTION EXPENSES IN EXCESS OF DIRECT DAMAGES WHICH ARE UNDENIABLY CAUSED EXCLUSIVELY BY FORNO OR ANY OTHER SPECIAL, INCIDENTAL OR CONSEQUENTIAL DAMAGES CAUSED BY THE USE, MISUSE OR INABILITY TO USE THIS PRODUCT, REGARDLESS OF THE LEGAL THEORY ON WHICH THE CLAIM IS BASED, AND EVEN IF FORNO HAS BEEN ADVISED OF THE POSSIBILITY OF SUCH DAMAGES. NOR SHALL RECOVERY OF ANY KIND AGAINST FORNO BE GREATER IN AMOUNT THAN THE PURCHASE PRICE OF THE PRODUCT SOLD BY FORNO AND CAUSING THE ALLEGED DAMAGE. WITHOUT PREJUDICE TO THE FOREGOING, PURCHASER ASSUMES ALL RISK AND LIABILITY FOR LOSS, DAMAGE OR INJURY TO PURCHASER AND PURCHASER'S PROPERTY AND TO OTHERS AND THEIR PROPERTY ARISING FROM THE USE, MISUSE, OR INABILITY TO USE THIS PRODUCT SOLD BY FORNO THAT IS NOT A DIRECT RESULT OF NEGLIGENCE ON THE PART OF FORNO THIS LIMITED WARRANTY SHALL NOT EXTEND TO ANYONE OTHER THAN THE ORIGINAL PURCHASER OF THIS PRODUCT, IS NON-TRANSFERABLE, AND STATES YOUR EXCLUSIVE REMEDY.



Correct Disposal of this product:
This marking indicates that this appliance should not be disposed with other household wastes. To prevent possible harm to the environment or human health from uncontrolled waste disposal, recycle it responsibly to promote the sustainable reuse of material resources.

Warranty

What this limited warranty covers:
The Warranty coverage provided by Forno Appliances in this statement applies exclusively to the original Forno appliance ("Product") sold to the consumer ("Purchaser") by an authorized Forno dealer/distributor/retailer, purchased and installed in the United States or Canada, and which has always remained within the original country of purchase (the United States or Canada). Warranty coverage is activated on the date of the Product's original retail purchase and has a duration of two (2) years.
Warranty coverage is non-transferable. In the event of replacement of parts or of the entire product, the replacement Product (or parts) shall assume the remaining original Warranty activated with the original retail purchase document. This Warranty shall not be extended with respect to such replacement. Forno Appliances will repair or replace any component/part which fails or proves defective due to materials and/or workmanship within 2 years of the date of the original retail purchase and under conditions of ordinary residential, non-commercial use. Repair or replacement will be free of charge, including labor at standard rates and shipping expenses. Purchaser is responsible for making the Product reasonably accessible for service. Repair service must be performed by a Forno Authorized Service company during normal working hours.

Important
Retain proof of original purchase to establish warranty period. Forno's liability on any claim of any kind, with respect to the goods and/or services provided, shall in no event exceed the value of the goods or service or part there of which has given rise to the claim.

30-Day Cosmetic Warranty
The Purchaser must inspect the product at the time of delivery. Forno warrants that the Product is free from manufacturing defects in materials and workmanship for a period of thirty (30) days from date of the original retail purchase of the Product.

This coverage includes:
- Paint blemishes
- Chips
- Macroscopic finish defects

Cosmetic warranty does NOT cover:
- Issues resulting from incorrect transport, handling and/or installation (e.g.: dents, broken, warped or deformed structures or components, cracked or otherwise damaged glass components);
- Slight color variations on painted/enameled components;
- Differences caused by natural or artificial lighting, location or other analogous factors; > stains/corrosion/discoloration caused by external substances and/or environmental factors; > labor costs, display, floor, B-stock, out- of-box,"as is" appliances and demo units.

How to receive service
To receive warranty services, the Purchaser must contact the Forno Support department in order to determine the problem and the required service procedures. Troubleshooting with a customer service representative will be necessary before moving forward with the service. Model number, serial number and date of original retail purchase will be requested.

Warranty Exclusions: What Is Not Covered.
- Use of the Product in any non-residential, commercial application.
- Use of the Product for anything other than its intended purpose.
- Repair services provided by anyone other than a Forno Authorized Service agency.
- Damages or repair services to correct services provided by unauthorized parties or the use of unauthorized parts.
- Installation not in accordance with local/state/city/county fire codes, electrical codes, gas codes, plumbing codes, building codes, laws or regulations.
- Defects or damage due to improper storage of the Product.
- Defects, damage or missing parts on products sold out of the original factory packaging or from displays. > Service calls or repairs to correct an incorrect installation of the Product and/or related accessories.
- Replacement of parts/service calls to connect, convert or otherwise repair the electrical wiring and/or gas line in order to properly use the product.
- Replacement of parts/service calls to provide instructions and information on the use of the Product.
- Replacement of parts/service calls to correct issues arising from the product being used in a manner other than what is normal and customary for residential use.
- Replacement of parts/service calls due to wear and tear of components such as seals, knobs, pan supports, shelving, cutlery baskets, buttons, touch displays, scratched or broken ceramic-glass tops.
- Replacement of parts/service calls for lack of/improper maintenance, including but not limited to: build up of residues, stains, scratches, discoloration, corrosion.
- Defects and damages arising from accidents, alteration, misuse, abuse or improper installation.
- Defects and damages arising from Product transport, logistics and handling. Inspection of the product must be made at time of delivery. Following receipt and inspection, the selling dealer/delivery company must be notified of any issues arising from handling, transport and logistics.
- Defects and damages arising from external forces beyond the control of Forno Appliances, including but not limited to wind, rain, sand, fires, floods, mudslides, freezing temperatures, excessive moisture or extended exposure to humidity, power surges,
- Lightning, structural failures surrounding the appliance and other acts of God.
- Products whose serial number has been altered/damaged/tampered with. In no case shall Forno be held liable or responsible for damage to surrounding property, including furniture, cabinetry, flooring, panels, and other structures surrounding the Product. Forno is neither liable nor responsible for the Product if it is located in a remote area or an area where certified trained technicians are not reasonably available. Purchaser must bear any transportation and delivery costs of the Product to the nearest Authorized Service Center or the additional travel expenses of a certified trained technician

FORNO®

Alta Qualita

FOR

FAST SUPPORT

EMAIL AT **INFO@FORNO.CA**



Customer Support: Call 1-866-231-8893 or email: info@forno.ca

ENGLISH

FORNO®
Alta Qualita

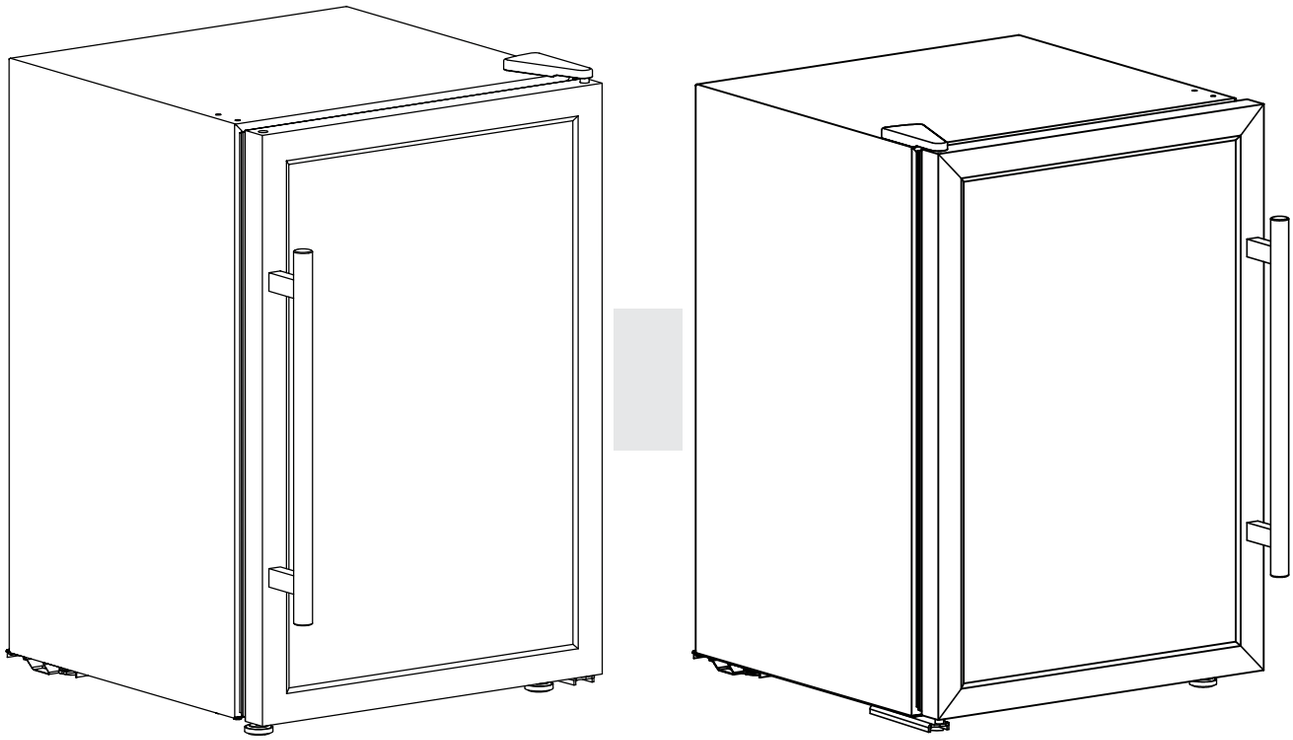

Outdoor Mini Stainless Steel Refrigerator

MODEL NUMBER SERIES:
FODKT2544BLK
FODKT2551BLK
FODKT2568BLK
FODKT2575WHT

Part 2/2

INSTRUCTION MANUAL & INSTALLATION GUIDE

Read these instructions carefully before using your appliance, and keep it carefully.
If you follow the instructions, your appliance will provide you with many years of good service.

TABLE OF CONTENTS

Customer Care	4
Warning	5
Important Safety	6
Product Dimension	7
Cutout	8
Names of Parts and Accessories	9
Operating Instruction	12
Care & Maintenance	13
Troubleshooting	14
Wire Diagram	15
Warranty	16-17

Customer Care

Thank you for purchasing a Forno product. Please read the entire instruction manual before operating your new appliance for the first time. Whether you are an occasional user or an expert, it will be beneficial to familiarize yourself with the safety practices, features, operation and care recommendations of your appliance.

Both the model and serial number are listed inside the product. For warranty purposes, you will also need the date of purchase .

Record this information below for future reference.

Product Information

Model Number : _____

Serial Number :

Date of Purchase : _____

Purchase Address And Phone :

_____

_____

Service Information

Use these numbers in any correspondence or services calls concerning your product.

If you received a damaged product, immediately contact Forno.

To save time and money, before you call for service, check the troubleshooting guide. It lists the causes of minor operation prob - lems that you can correct yourself.

“Need some quick help? Simply scan the qr code and get access to our fast support form. We’re always here to assist you with any questions or concerns you may have. So, don’t hesitate to reach out!”

Services in Canada and Untied States

Keep the instruction manual handy to answer your questions. If you don’t understand something or need more assistance, please visit our website for fast support. Please provide us your name, number, address,serial number of the product that troubleshooting, proof of purchase, and a short description of the issue. A customer service representative will contact you as soon as possible. All warranty work needs to be authorized by FORNO customer service. All our authorized service providers are carefully selected and rigorously trained by us.

WARNING

FOR YOUR SAFETY

We have provided many important safety messages in this manual and on your appliance. Always read and obey all safety messages.

This is the safety alert symbol. This symbol alerts you to potential hazards that can kill or hurt you and others. All safety messages will follow the safety alert symbol and either the word “DANGER,” “WARNING” or “CAUTION.” These words mean:

DANGER

- You can be killed or seriously injured if you don’t immediately follow instructions.

WARNING

- You can be killed or seriously injured if you don’t follow instructions.

CAUTION

- A potentially hazardous situation which, if not avoided, could result in minor or moderate injury.

All safety messages will tell you what the potential hazard is, tell you how to reduce the chance of injury, and tell you what can happen if the instructions are not followed.

WARNING : This product can expose you to chemicals including [Lead, lead and lead compound, which is [are] known to the state of California to cause cancer and birth defects or other reproductive harm. For more information go to **www.P65Warning.ca.gov.**

SAFETY REQUIREMENTS

DANGER: Risk of fire or explosion. Flammable refrigerant used. Do not puncture refrigerant tubing.

- Do not use mechanical devices to defrost refrigerator.
- Ensure that servicing is done by factory authorized service personnel, to minimize product damage or safety issues.
- If the power supply cord is damaged, it must be replaced by the manufacturer, its service agent or similar qualified person in order to avoid hazard.
- Consult repair manual or owner's guide before attempting to service this product. All safety precautions must be followed.
- Dispose of properly in accordance with federal or local regulations.
- Follow handling instructions carefully.
- Do not store explosive substances such as aerosol cans with a flammable propellant in this appliance.

WARNING: Keep ventilation openings, in the appliance enclosure or in the built-in structure, clear of obstruction.

WARNING: Do not use mechanical devices or other means to accelerate the defrosting process, other than those recommended by the manufacturer.

WARNING: Do not damage the refrigerant circuit.

WARNING: Do not use electrical appliances inside the food storage compartments of the appliance, unless they are of the type recommended by the manufacturer.

CAUTION: Children should be supervised to ensure that they do not play with the appliance.

DANGER: Risk of child entrapment. Before throwing away an old appliance:
- Remove the door or lid.
- Leave shelves in place so that children may not easily climb inside.

DANGER: Do not add a lock to the door or lid. This can cause child entrapment and harm.

This appliance is not intended for use by persons (including children) whose physical, sensory or mental capabilities may be different or reduced, or who lack experience or knowledge, unless such persons receive supervision or training to operate the appliance by a person responsible for their safety.

This appliance is not a medical refrigerator, it CANNOT be used to store medicines, blood or vaccines.

GROUNDING INSTRUCTIONS

This appliance must be grounded. Grounding reduces the risk of electrical shock by providing an escape wire for the electrical current.

This appliance has a cord that has a grounding wire with a 3-prong plug. The power cord must be plugged into an outlet that is properly grounded. If the outlet is a 2-prong wall outlet, it must be replaced with a properly grounded 3-prong wall outlet. The serial rating plate indicates the voltage and frequency the appliance is designed for.

WARNING - Improper use of the grounding plug can result in a risk of electric shock. Consult a qualified electrician or service agent if the grounding instructions are not completely understood, or if doubt exists as to whether the appliance is properly grounded.

Do not connect your appliance to extension cords or together with another appliance in the same wall outlet. Do not splice the power cord. Do not under any circumstances cut or remove the third ground prong from the power cord. Do not use extension cords or ungrounded (two prongs) adapters.

Product Dimension

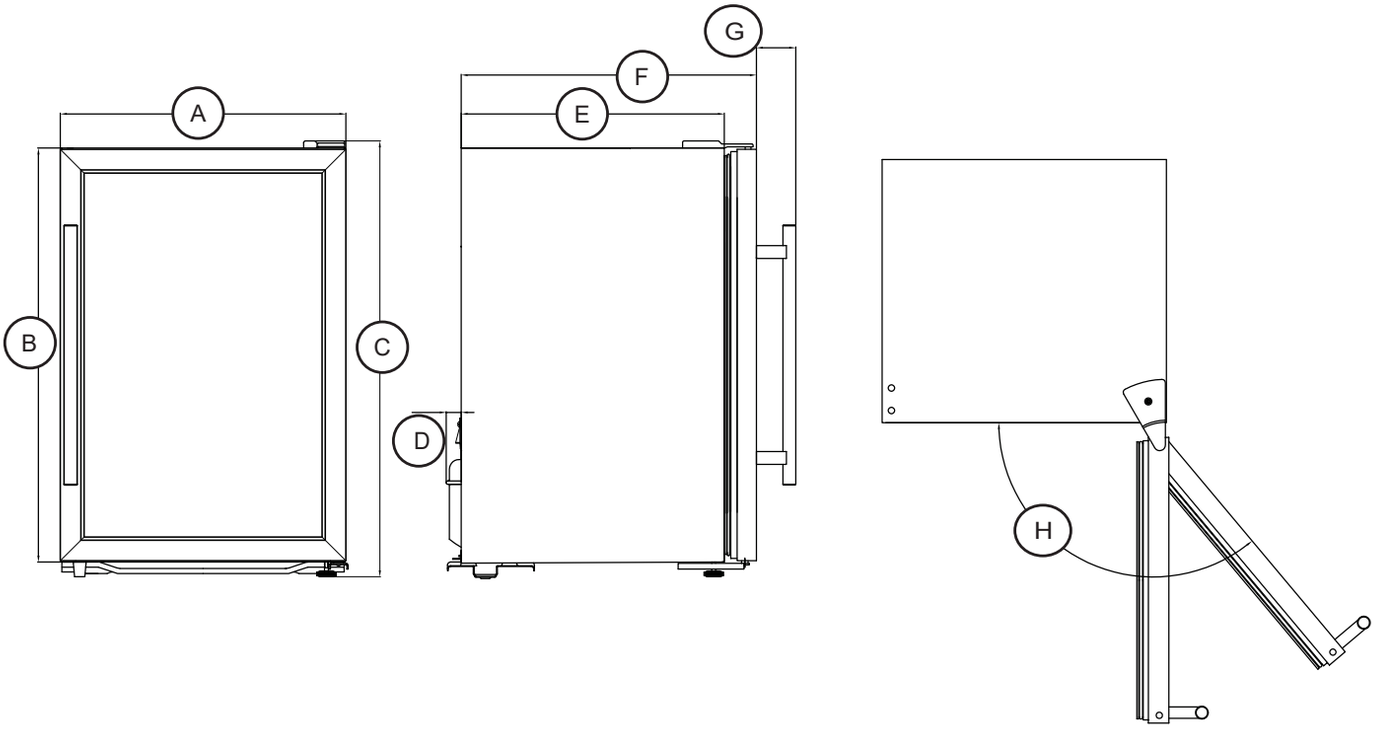

A	B	C	D	E	F
Overall Width	Height Hing to foot (on minimum)	Overall Height Hing to foot (on maximum)	Shock Absorber Block	Depth Without door to back	Depth Door to back
17 1/2"	25 3/8"	26 3/4"	15/16"	16 1/8"	18 1/8"
445mm	645mm	679mm	23.5mm	410mm	460mm

G	H
Depth Handle	Opening (Fully open door)
2 7/16"	130°
61.4mm	

Cutout

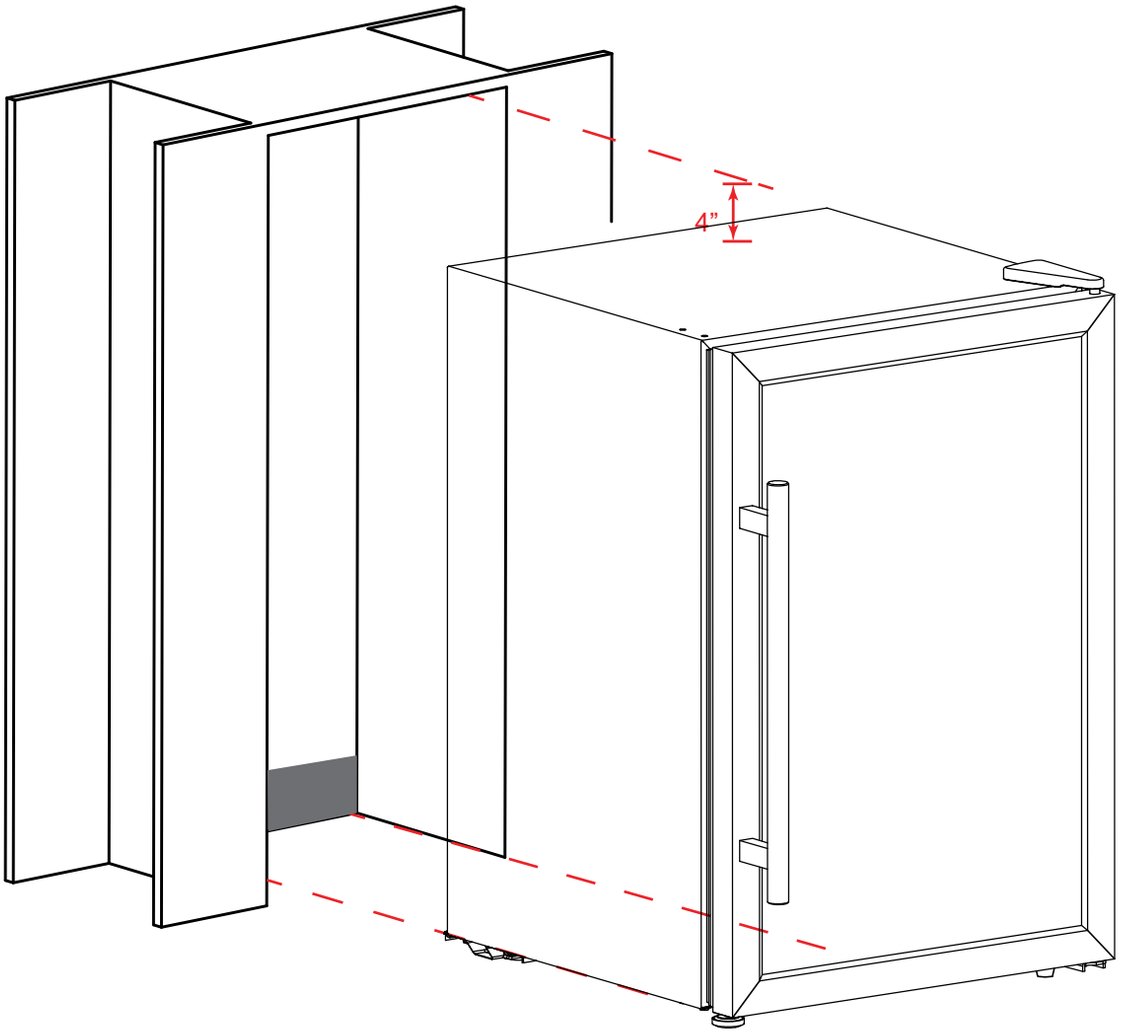

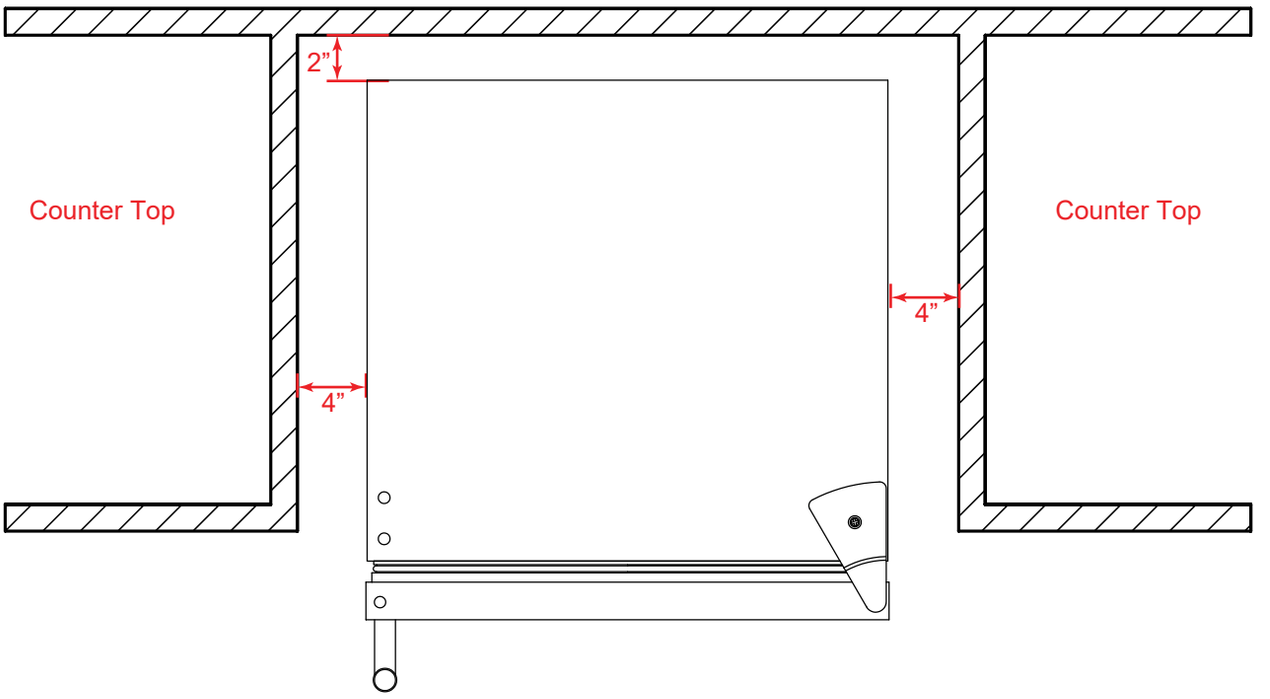

Name of Parts and Accessories

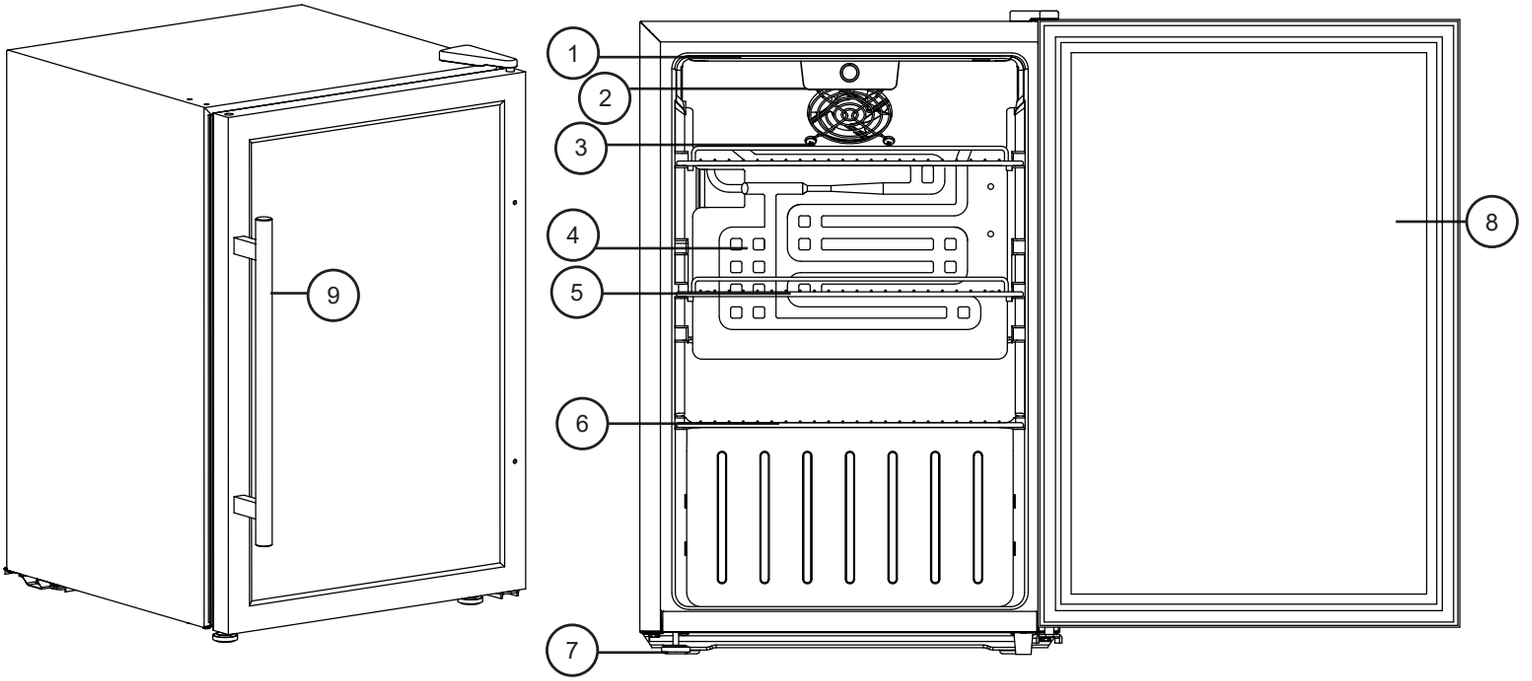

1	LED light
2	Mechanical Thermostat
3	Fan Motor
4	Evaporator
5	Shelf II
6	Bottom Shelf
7	Adjustable feet
8	Glass door
9	Handle

Supplied Parts	
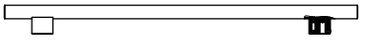 1x Handle	 Logo Plate
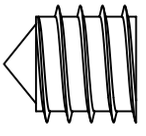 2x Screws for the handle	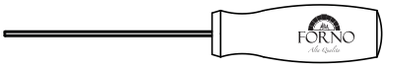 Screw Driver

Installation

Location

• Two people should be used when moving the appliance.

• Remove interior and exterior packaging prior to installation. Wipe the outside of the appliance with a soft, dry cloth and the inside with a lukewarm wet cloth.

• Place the appliance on a floor that is strong enough to support it when it is fully loaded.

• Do not place the appliance in direct sunlight or near sources of heat, such as a stove or heater, as this can increase electrical consumption. Extreme cold ambient temperatures may also cause the appliance to perform improperly.

• Do not use the appliance near water, for example in a wet basement or near a sink.

• Before connecting the appliance to a power source, let it stand upright for approximately 6 hours. This will reduce the possibility of a malfunction in the cooling system from handling during transportation.

• This appliance is 44.5 cm (17.52 inches) wide by 67.9 cm (26.73 inches) high by 54.5 cm (21.46 inches) deep.

• Allow 5.1 - 10.16 cm (2-4 inches) of space between the back, sides and top of the appliance and all adjacent walls.

• This appliance is intended for free-standing installation only and is not intended to be built into a cabinet or counter. Building in this appliance can cause it to malfunction.

• This appliance can be used outdoors. The recommended ambient operating temperature is between 7°C- 43°C (45°F - 109°F) when not in direct sunlight.

IMPORTANT

Ensure that the door is fully closed when the appliance is in operation. Failure to fully close the door can lead to excessive condensation and potential water damage to flooring under the appliance. Forno will not be responsible for damages from misuse.

Leveling instructions

There are two adjustable feet on the bottom of the appliance that can be turned up or down to ensure that the appliance is level.

1. Turn the adjustable foot counter-clockwise as far as it will go, until the top of the foot is touching the bottom of the cabinet.
2. Slowly turn the adjustable foot clockwise until the appliance is level.

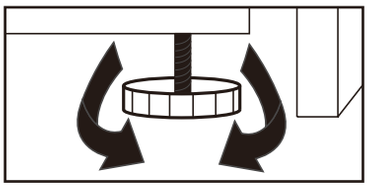

Installing The Handle

1.Locate the handle over the pins on the door panel.

2.Fix the handle by tighten the screw.

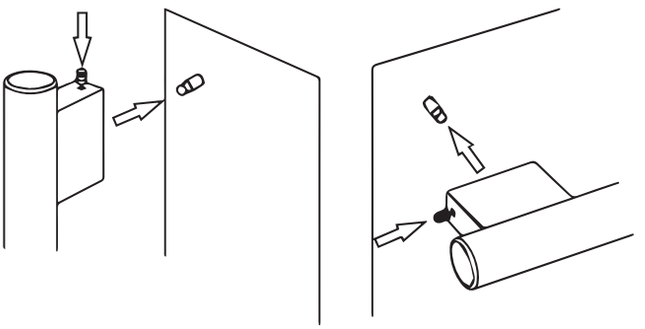

OPERATING INSTRUCTIONS

TEMPERATURE SELECTION

The temperature of the appliance can be adjusted by turning the thermostat dial.

- The larger dots indicate the coldest setting.
- The smaller dots indicate the warmest setting.
- The “OFF” position will turn off the cooling function.

Internal temperature of the appliance can vary based on ambient temperature, the quantity of items stored and how frequently the door is opened.

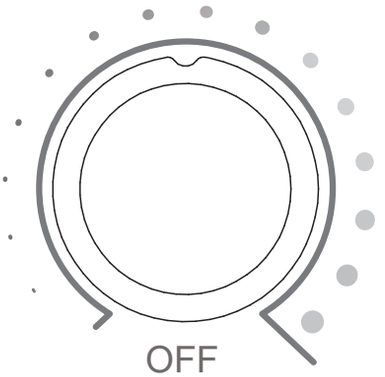

INTERIOR LIGHT

To manually operate the interior light, press the light switch situated on the right side of the interior light housing on the ceiling of the unit. This will allow the light to remain on while the door is closed.

Note: The light will default to off. It can be turned on to run continually. Due to energy efficiency requirements for a beverage center in this size, there is no option to have the light turn on when the door opens.

STOCKING INSTRUCTIONS

This beverage center has a maximum capacity of 87 355 ml cans when stocked as pictures below.

The first shelf will hold 10 cans.

The second shelf will hold 25 cans.

The third shelf will hold 24 cans.

The bottom section will hold 28 cans.

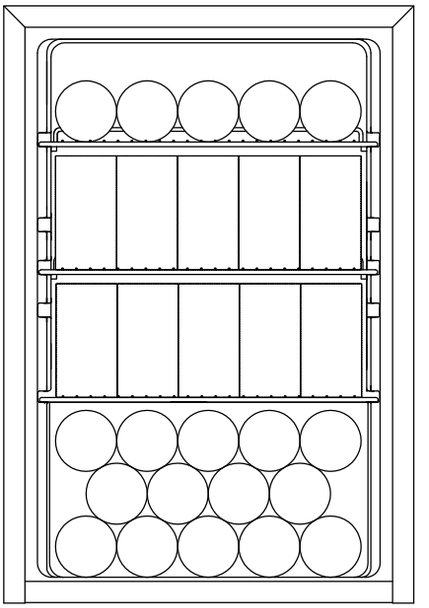

SHELF INSTRUCTIONS

To remove a shelf from its locked position, lift the rear of the shelf upward and then slide the shelf out of the unit.

To replace the shelf, ensure it is resting securely on the support brackets and then push inward until the shelf locks into place.

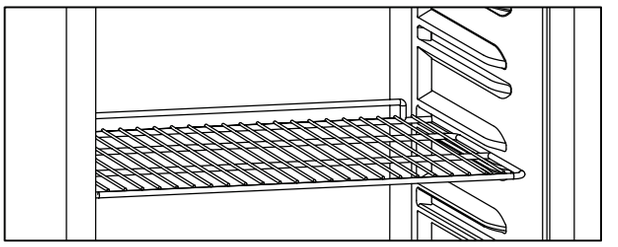

Care & Maintenance

CLEANING

Ensure the appliance is unplugged before cleaning. To clean the inside of the appliance, use a soft cloth and a solution of one tablespoon of baking soda to one quart of water or some mild detergent. Wash removable shelves in a mild detergent solution, then dry and wipe with a soft cloth. Clean the outside with a soft, damp cloth and some mild detergent. It is important to keep the area clean where the door seals against the cabinet. Clean this area with a soapy cloth. Rinse with a damp cloth and let dry.

Note: Do not use cleaners containing ammonia or alcohol on the appliance. Ammonia or alcohol can damage the appearance of the appliance. Never use any commercial or abrasive cleaners or sharp objects on any part of the appliance.

POWER FAILURE

Most power failures are corrected within a few hours and should not affect the temperature of your appliance if you minimize the number of times the door is opened. If the power is going to be off for a longer period of time, take the proper steps to protect your contents.

Note: Wait 3 to 5 minutes before attempting to restart the refrigerator if operation has been interrupted

DEFROST

This unit is equipped with an automatic defrost function and does not require manual defrosting. Defrost water from the appliance is channeled into a drip tray located in the compressor room. Heat transfer from the evaporating pipe causes the defrost water to evaporate.

VACATION

- Short vacations: Leave the appliance operating during vacations of less than three weeks.
- Long vacations: If the appliance will not be used for several months, remove all items and turn off the appliance. Clean and dry the Interior thoroughly. To prevent odor and mold growth, leave the door open slightly, blocking it open if necessary.

MOVING

- Remove all items.
- Tape down all shelves.
- Turn the adjustable feet up to the base to avoid damage.
- Tape the door shut.
- Ensure the appliance stays in the upright position during transportation. Protect the outside of the appliance with a blanket.
- If the appliance is placed on its back or side during transportation, upon reaching the destination, allow it to remain upright for 6 hours before plugging in to avoid damage to internal components.

DISPOSAL

This appliance may not be treated as a regular household waste, it should be taken to the appropriate waste collection point for the recycling of electrical components. For information on local waste collection points, contact your local waste removal agency or government office.

SEASONAL STORAGE

- If the appliance will be exposed to low temperatures or not used for an extended period (e.g., during winter), the refrigerator module must be emptied, cleaned, and stored indoors.
- Ensure the unit is completely dry before storage. Leave the door slightly open to prevent odor and mold growth.
- All water from the sink and faucet module must be completely drained to prevent freezing and potential damage to internal components.
- Failure to store the refrigerator module in a protected indoor environment during freezing conditions may affect performance and could lead to damage.

Troubleshooting

No power
- A fuse may be blown or the circuit breaker tripped
- Plug not fully inserted into the wall outlet

Internal temperature not cold enough
- Temperature setting is too warm
- The door or lid is not shut properly or opened excessively
- Recently added a large quantity of warm food to the cabinet
- Close proximity to heat source or direct sunlight
- Ambient temperature or humidity is very high

Appliance runs continuously
- Temperature setting is too cold
- The door or lid is not shut properly or opened excessively
- Recently added a large quantity of warm food to the cabinet
- Close proximity to heat source or direct sunlight
- Ambient temperature or humidity is very high

Freezer makes a gurgling noise when operating
- This noise is completely normal. The refrigerant inside the appliance will make a gurgling noise as it changes from a liquid to a gas and back again.

Condensatoon on the cabinet on door
- Door is not shut propenly on opened excessively
- Ambient trmpenature on humidily is very high

Wire Diagram

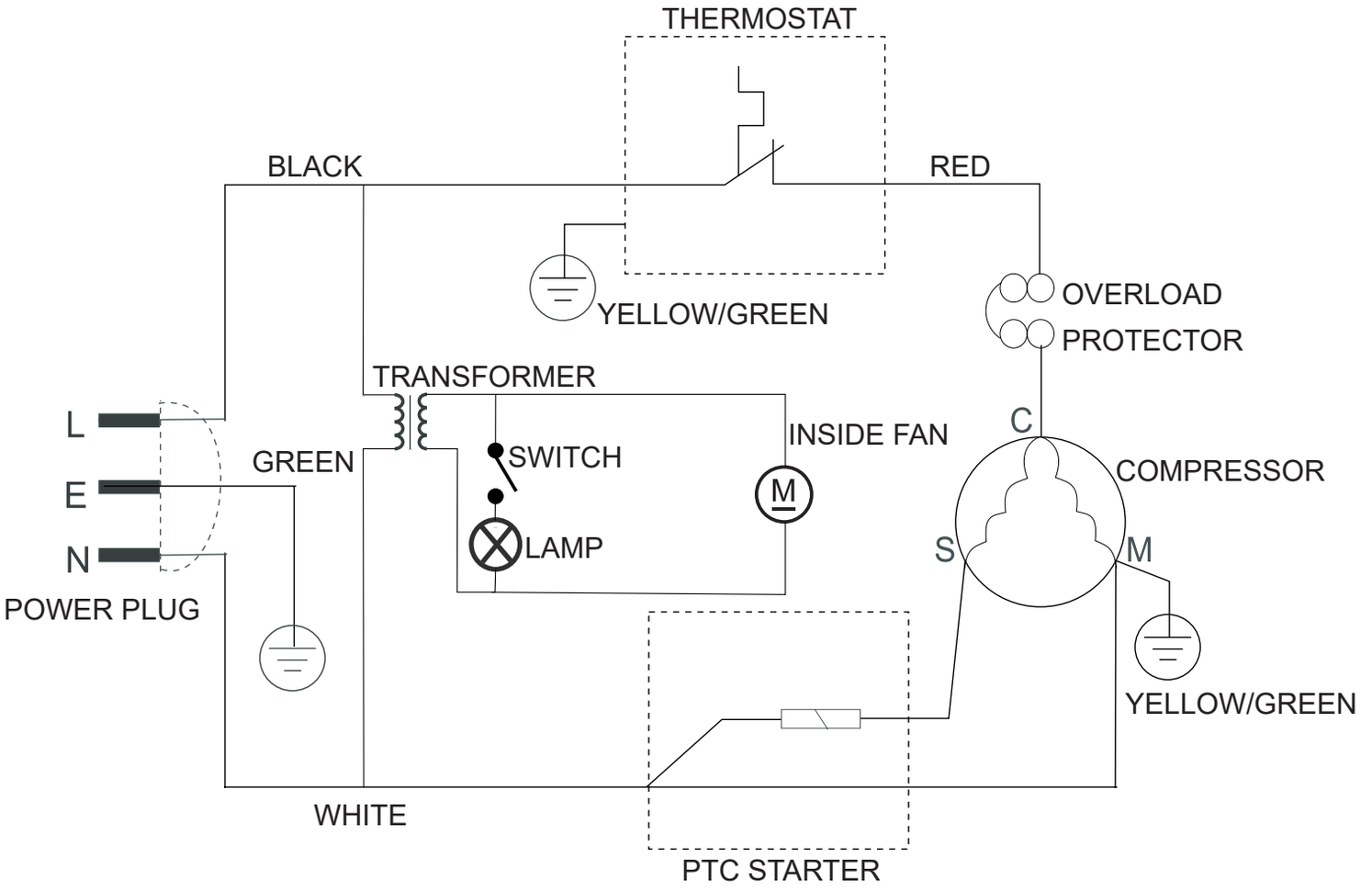

Warranty

What this limited warranty covers:
The Warranty coverage provided by Forno Appliances in this statement applies exclusively to the original Forno appliance (“Product”) sold to the consumer (“Purchaser”) by an authorized Forno dealer/distributor/retailer, purchased and installed in the United States or Canada, and which has always remained within the original country of purchase (the United States or Canada). Warranty coverage is activated on the date of the Product’s original retail purchase and has a duration of two (2) years.
Warranty coverage is non-transferable. In the event of replacement of parts or of the entire product, the replacement Product (or parts) shall assume the remaining original Warranty activated with the original retail purchase document. This Warranty shall not be extended with respect to such replacement. Forno Appliances will repair or replace any component/part which fails or proves defective due to materials and/or workmanship within 2 years of the date of the original retail purchase and under conditions of ordinary residential, non-commercial use. Repair or replacement will be free of charge, including labor at standard rates and shipping expenses. Purchaser is responsible for making the Product reasonably accessible for service. Repair service must be performed by a Forno Authorized Service company during normal working hours.

Important
Retain proof of original purchase to establish warranty period. Forno’s liability on any claim of any kind, with respect to the goods and/or services provided, shall in no event exceed the value of the goods or service or part there of which has given rise to the claim.

30-Day Cosmetic Warranty
The Purchaser must inspect the product at the time of delivery. Forno warrants that the Product is free from manufacturing defects in materials and workmanship for a period of thirty (30) days from date of the original retail purchase of the Product.

This coverage includes:
- Paint blemishes
- Chips
- Macroscopic finish defects

Cosmetic warranty does NOT cover:
- Issues resulting from incorrect transport, handling and/or installation (e.g.: dents, broken, warped or deformed structures or components, cracked or otherwise damaged glass components);
- Slight color variations on painted/enameled components;
- Differences caused by natural or artificial lighting, location or other analogous factors; > stains/corrosion/discoloration caused by external substances and/or environmental factors; > labor costs, display, floor, B-stock, out- of-box,“as is” appliances and demo units.

How to receive service
To receive warranty services, the Purchaser must contact the Forno Support department in order to determine the problem and the required service procedures. Troubleshooting with a customer service representative will be necessary before moving forward with the service. Model number, serial number and date of original retail purchase will be requested.

Warranty Exclusions: What Is Not Covered.
- Use of the Product in any non-residential, commercial application.
- Use of the Product for anything other than its intended purpose.
- Repair services provided by anyone other than a Forno Authorized Service agency.
- Damages or repair services to correct services provided by unauthorized parties or the use of unauthorized parts.
- Installation not in accordance with local/state/city/county fire codes, electrical codes, gas codes, plumbing codes, building codes, laws or regulations.
- Defects or damage due to improper storage of the Product.
- Defects, damage or missing parts on products sold out of the original factory packaging or from displays. > Service calls or repairs to correct an incorrect installation of the Product and/or related accessories.
- Replacement of parts/service calls to connect, convert or otherwise repair the electrical wiring and/or gas line in order to properly use the product.
- Replacement of parts/service calls to provide instructions and information on the use of the Product.
- Replacement of parts/service calls to correct issues arising from the product being used in a manner other than what is normal and customary for residential use.
- Replacement of parts/service calls due to wear and tear of components such as seals, knobs, pan supports, shelving, cutlery baskets, buttons, touch displays, scratched or broken ceramic-glass tops.
- Replacement of parts/service calls for lack of/improper maintenance, including but not limited to: build up of residues, stains, scratches, discoloration, corrosion.
- Defects and damages arising from accidents, alteration, misuse, abuse or improper installation.
- Defects and damages arising from Product transport, logistics and handling. Inspection of the product must be made at time of delivery. Following receipt and inspection, the selling dealer/delivery company must be notified of any issues arising from handling, transport and logistics.
- Defects and damages arising from external forces beyond the control of Forno Appliances, including but not limited to wind, rain, sand, fires, floods, mudslides, freezing temperatures, excessive moisture or extended exposure to humidity, power surges,
- Lightning, structural failures surrounding the appliance and other acts of God.
- Products whose serial number has been altered/damaged/tampered with. In no case shall Forno be held liable or responsible for damage to surrounding property, including furniture, cabinetry, flooring, panels, and other structures surrounding the Product. Forno is neither liable nor responsible for the Product if it is located in a remote area or an area where certified trained technicians are not reasonably available. Purchaser must bear any transportation and delivery costs of the Product to the nearest Authorized Service Center or the additional travel expenses of a certified trained technician

Warranty

THERE ARE NO EXPRESS WARRANTIES OTHER THAN THOSE LISTED AND DESCRIBED ABOVE, AND NO WARRANTIES, EITHER EXPRESS OR IMPLIED, INCLUDING, BUT NOT LIMITED TO, ANY IMPLIED WARRANTIES OF MERCHANTABILITY OR FITNESS FOR A PARTICULAR PURPOSE THAT SHALL APPLY AFTER THE EXPRESS WARRANTY PERIODS STATED ABOVE, AND NO OTHER EXPRESS WARRANTY OR GUARANTEE GIVEN BY ANY PERSON, FIRM OR CORPORATION WITH RESPECT TO THIS PRODUCT SHALL BE BINDING ON FORNO. FORNO SHALL NOT BE LIABLE FOR LOSS OF REVENUE OR PROFITS, FAILURE TO REALIZE SAVINGS OR OTHER BENEFITS, TIME AWAY FROM WORK, MEALS, LOSS OF FOOD OR BEVERAGES, TRAVELING OR HOTEL EXPENSES, EXPENSES TO RENT OR PURCHASE APPLIANCES, REMODELING/CONSTRUCTION EXPENSES IN EXCESS OF DIRECT DAMAGES WHICH ARE UNDENIABLY CAUSED EXCLUSIVELY BY FORNO OR ANY OTHER SPECIAL, INCIDENTAL OR CONSEQUENTIAL DAMAGES CAUSED BY THE USE, MISUSE OR INABILITY TO USE THIS PRODUCT, REGARDLESS OF THE LEGAL THEORY ON WHICH THE CLAIM IS BASED, AND EVEN IF FORNO HAS BEEN ADVISED OF THE POSSIBILITY OF SUCH DAMAGES. NOR SHALL RECOVERY OF ANY KIND AGAINST FORNO BE GREATER IN AMOUNT THAN THE PURCHASE PRICE OF THE PRODUCT SOLD BY FORNO AND CAUSING THE ALLEGED DAMAGE. WITHOUT PREJUDICE TO THE FOREGOING, PURCHASER ASSUMES ALL RISK AND LIABILITY FOR LOSS, DAMAGE OR INJURY TO PURCHASER AND PURCHASER'S PROPERTY AND TO OTHERS AND THEIR PROPERTY ARISING FROM THE USE, MISUSE, OR INABILITY TO USE THIS PRODUCT SOLD BY FORNO THAT IS NOT A DIRECT RESULT OF NEGLIGENCE ON THE PART OF FORNO THIS LIMITED WARRANTY SHALL NOT EXTEND TO ANYONE OTHER THAN THE ORIGINAL PURCHASER OF THIS PRODUCT, IS NON-TRANSFERABLE, AND STATES YOUR EXCLUSIVE REMEDY.



Correct Disposal of this product:
This marking indicates that this appliance should not be disposed with other household wastes. To prevent possible harm to the environment or human health from uncontrolled waste disposal, recycle it responsibly to promote the sustainable reuse of material resources.

FORNO

Alta Qualita

FOR

FAST SUPPORT

EMAIL AT ***INFO@FORNO.CA***



Customer Support: Call 1-866-231-8893 or email: info@forno.ca