hpotech

1 SEAT

PRESSURE LEVELS → 2.0 ATA & 2.4 ATA

ZEUGMA Multiplace Hyperbaric Chamber

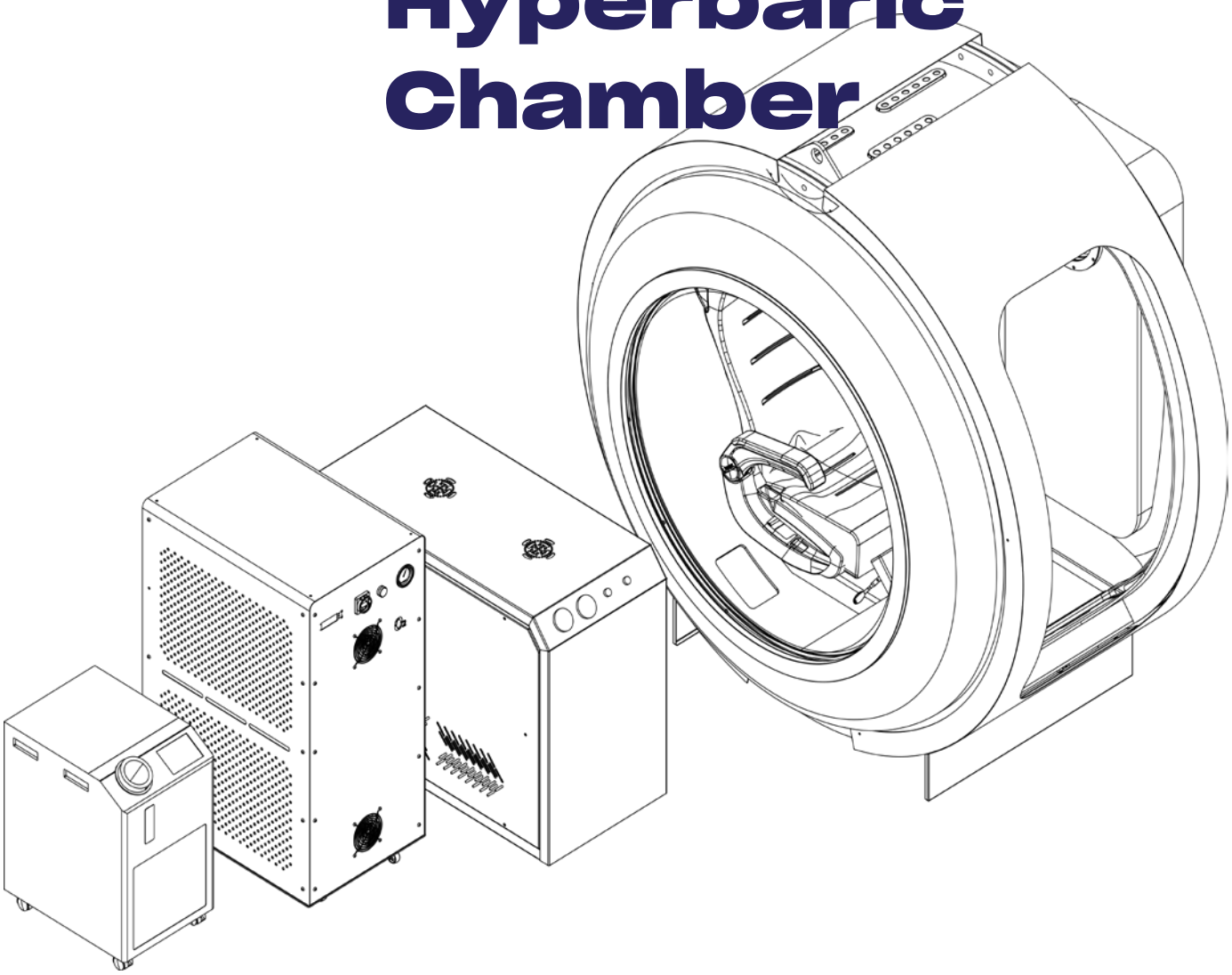

OPERATIONS AND MAINTENANCE USER MANUAL

PRODUCT REF Nº → TKBO-X

REVISION DATE → 09.09.2025

User Service Program

A comprehensive service program is available to all users of the MEDITERRANEAN Hyperbaric System manufactured by HPO TECH. For information regarding annual service contracts, please get in touch with the office.

HPOTECH MEDİKAL VE TEKNİK ÇÖZÜMLER SAN VE TİC A.Ş

Telephone: +90 543 931 54 54
Telephone: +90 506 118 94 05
Address: Ataşehir Ferhatpaşa, 49. Sk. No: 29, 34888 Ataşehir, İstanbul, Turkey
info@hpotech.com
www.hpotech.com

1. Introduction 5
1.1. About this manual 7
1.2. HPO TECH About the Manufacturer 10

2. The ZEUGMA hyperbaric chamber system 13
2.1. System features 17
2.2. Technical sketches 18
2.3. Technical specifications 19

3. Installation guidelines for the hyperbaric chamber 23
3.1. Dedicated chamber room 24
3.2. Location and Environmental Considerations 24
3.3. Fire Safety 24
3.4. Flooring 24
3.5. Room dimensions and installation floor size 24
3.6. Ventilation and Exhaust 24
3.7. Grounding 24

4. Safety 29
4.1. General safety rules 30
4.2. Safety precautions 30
4.3. Emergency procedures and safety guidelines 31
4.4. General maintenance and safety guidelines 31

5. Chamber exterior 35
5.1. Chamber Interior Guidelines 36
5.2. Electronics safety protocol 37
5.3. Personnel requirements 39
5.4. Patient safety guidelines 39

6. Device presentation 43
6.1. System components 44
6.2. COMPONENTS DESCRIPTIONS 46
6.3. ADDITIONAL FEATURES 58

7. Instructions of Use 61

8. Emergency scenarios 69

9. Warranty Terms and Conditions 75

10. Certifications 79
1. Medical Device Regulations 80
2. Pressure Vessel and Safety Regulations 81
3. Product and Occupational Safety Standards 81
4. Quality and Management Systems Certifications 82

11. Software control 85

12. Indications for use (IFU) 99
1. Intended Use 100
2. Indications 100
3. Target population for HBOT 101
4. Contraindications 102
5. Warnings 103
6. Precautions 103
7. Recommended usage periods 104
8. Post-session recommendations 105
9. Side effects of hyperbaric oxygen therapy 107
10. Hazards and associated risks 107
11. Clinical considerations 110
12. Documentation and Records 110
13. Evidence and research 110



1. Introduction

This manual provides detailed operating and maintenance procedures for the ZEUGMA Monoplace Hyperbaric Chamber.

Pressure levels → 2.0 ATA & 2.4 ATA

The procedures outlined by HPO TECH are designed to prolong the life of the system and ensure optimal safety and reliability. The ZEUGMA hyperbaric system must be operated and maintained by properly trained and experienced personnel only. This manual is not a substitute for proper training or supervision.

Scope and purpose

The manual focuses on mechanical operation and maintenance of the equipment.

Care and treatment of patients is beyond the scope of this manual.

Safety information is crucial, so strict adherence to procedures is necessary.

Usefulness and accreditation

The manual serves as an important component of the system.

It can be useful for accreditation programs and should be kept in the chamber facility for easy reference.

Updates and revisions

Information in the manual is based on the latest product data.

Revisions are tracked, and updated manuals are sent to user facilities.



NOTE
Last revision date → 09.09.2025

Emergency preparedness

In emergencies, operators may not have time to consult the manual.

Thorough training is essential for chamber personnel.

1. Introduction

1.1. About this manual

This manual is designed to familiarize you with the installation, operation, maintenance, and emergency procedures for the ZEUGMA Monoplace Hyperbaric Chamber (2.0 ATA & 2.4 ATA). It covers the recommended mechanical procedures only and does not include patient care or treatment guidelines.

For patient care or treatment guidelines, refer to the Indications For Use (IFU) document annexed to this User Manual.

Purpose and importance

- This manual contains vital safety information and should be treated as an essential part of your system.
- Strict adherence to the procedures and recommendations in this manual is crucial to ensure safe and reliable operation of the hyperbaric chamber.

Manual updates and revisions

- All information, illustrations, and specifications in this manual are based on the most up-to-date product details available at the time of printing.
- HPOTECH will provide updates when necessary.
- A list of revisions is included at the beginning of this manual, and updated versions will be distributed to each user facility.

Accreditation and compliance

- The manual is also a useful resource for accreditation programs.
- It is recommended that you store this manual in the chamber facility for easy reference, along with your organization's specific policies and procedures (e.g., fire code, code blue) and personnel training records.

Importance of operator familiarity

- Due to the critical nature of hyperbaric chamber operation, there is little margin for error. In emergency situations, there may not be time to consult the manual, so operators and technicians must be thoroughly familiar with its contents.
- This manual is intended to support the operator in the maintenance and operation of the ZEUGMA Monoplace Hyperbaric Chamber. However, medical care and treatment of patients is beyond the scope of this document.

Operator training

- Proper training of chamber operating personnel is of critical importance.
- Knowledge of this manual is not a substitute for thorough and professional training.

WARNING
Failure to follow the procedures outlined in this manual will void all warranties and may result in damage to the equipment or injury to personnel.

By thoroughly understanding and following the contents of this manual, you will help ensure the safe and efficient operation of your ZEUGMA Monoplace Hyperbaric Chamber.

Safety Information Flags

This manual includes three categories of safety information to highlight important precautions: Warnings, Cautions, and Notes. Each category is designed to ensure the safety of personnel and equipment during operation and maintenance of the hyperbaric chamber.



WARNING
Definition → Identifies situations that are potentially hazardous or lethal to personnel.
Purpose → To prevent serious injury or death.



CAUTION
Definition → Identifies situations that are potentially hazardous to equipment and materials.
Purpose → To prevent damage or malfunction of the system.



NOTES
Definition → Identifies conditions or situations that may require additional information for better understanding.
Purpose → To provide useful insights or clarifications to enhance proper usage.

These flags are strategically placed throughout the manual to ensure safe and efficient operation of the ZEUGMA Monoplace Hyperbaric Chamber.

1. Introduction

Labels Nameplate symbols

ÜRÜN ADI	Name of the product
REF	Product Reference Number
SN	Product Serial Number
	Keep away from Sun Beam
	Store in Dry Place
	Protected Grounding
	Dispose of Waste Electrical and Electrical Equipment according to EC Regulation
	General Warning Symbol
	Read User's Manual before use
	Type B Application
hpotech	Company Logo
	Product Barcode Number
	See User Manual
	Company Info
	Production date
	Country of production
IP20	Water and Dust Permeability Classification
	Atmospheric pressure limit
	Temperature limit
	Humidity limit
CE	The product meets the EU's safety, health, and environmental protection standards.

1.2. HPO TECH
About the Manufacturer

Driving progress in hyperbaric technology to deliver the most effective results with hyperbaric oxygen therapy (HBOT)

HPO TECH, founded in 2019 in Istanbul, Turkey, is an industry innovator in designing and manufacturing advanced hyperbaric oxygen systems.

We provide modular solutions ranging from single-seat to multiplace chambers (up to 12+2 seats) with pressure levels from 2.0 ATA to 6.0 ATA, featuring streamlined oxygen delivery via BIBS masks. The company combines decades of expertise in hyperbaric engineering, diving rescue systems, aerospace engineering, military underwater technology, and shipbuilding.

HPO TECH's mission is to empower healthcare providers by delivering safe, effective, and user-friendly hyperbaric chambers that maximize treatment outcomes, reduce costs, and improve health and quality of life.

Driven by continuous R&D, the company sets new standards in hyperbaric oxygen therapy (HBOT) chambers and aerospace medicine (hypobaric chambers), providing certified systems that facilitate faster healing and renewed hope for patients worldwide.

Better HBOT technology. Better hyperbaric oxygen healthcare.

HPO TECH hyperbaric systems are designed to meet the needs of a wide range of customers, from medical professionals looking for a reliable treatment option for their patients to business owners seeking a modular multiplace solution for wellness centers or private individuals for personal use.

With years of practice in the industry, we have perfected our craft to deliver hyperbaric chambers that are safe, effective, easy to use, and provide a positive therapy experience.

Better technology translates to faster healing times, reduced pain, and renewed hope for people undergoing HBOT. Our ultimate objective is to make technology that delivers the most effective results in hyperbaric oxygen therapy.

Total Quality Management for hyperbaric chamber manufacturing

Our Total Quality Management system includes all aspects of design, manufacturing, testing, functionality, and customer service to ensure our hyperbaric oxygen systems are effective in therapy and safe, reliable, and accessible for patients.

Certifications

Holding all the important ASME-PVHO, MDD, PED, CE, ISO, NFPA certifications, our products are manufactured, tested, and certified to the highest quality and safety standards. We comply with all international safety and quality regulations.

▶ *See full list of Certifications at the end of the manual*

Quality testing

Our quality control team coordinates the manufacturing and third-party testing process according to international regulations, procedures, and criteria for the certification of medical devices for medical HBOT & wellness applications.

Safety and compliance

Safety standards and certifications guarantee the quality and reliability of hyperbaric chambers used for hyperbaric oxygen therapy (HBOT).



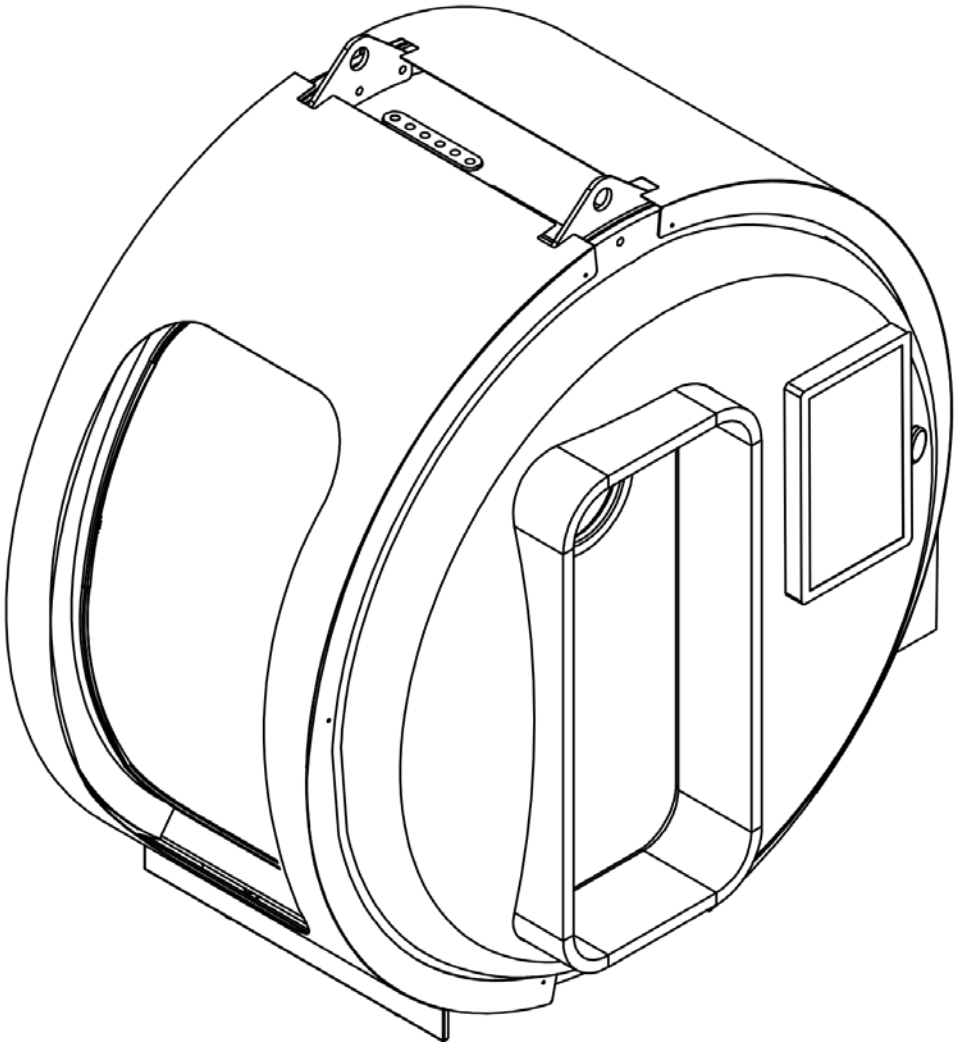

2. The ZEUGMA hyperbaric chamber system

Design and components

The ZEUGMA chamber (1 seats) is a pressure vessel mounted on a wheeled chassis.

The chamber is operated manually, or using the software available on the inside and outside control panels.

The pressure vessel connects with 3 (three) exterior system components designed for ease of operation and low maintenance:

- Air Compressor
- Oxygen Concentrator
- Air Cooler

Operation

The system compresses, maintains the patient at the desired pressure, and decompresses.

Treatment pressure and duration are adjusted by the operator based on physician instructions.

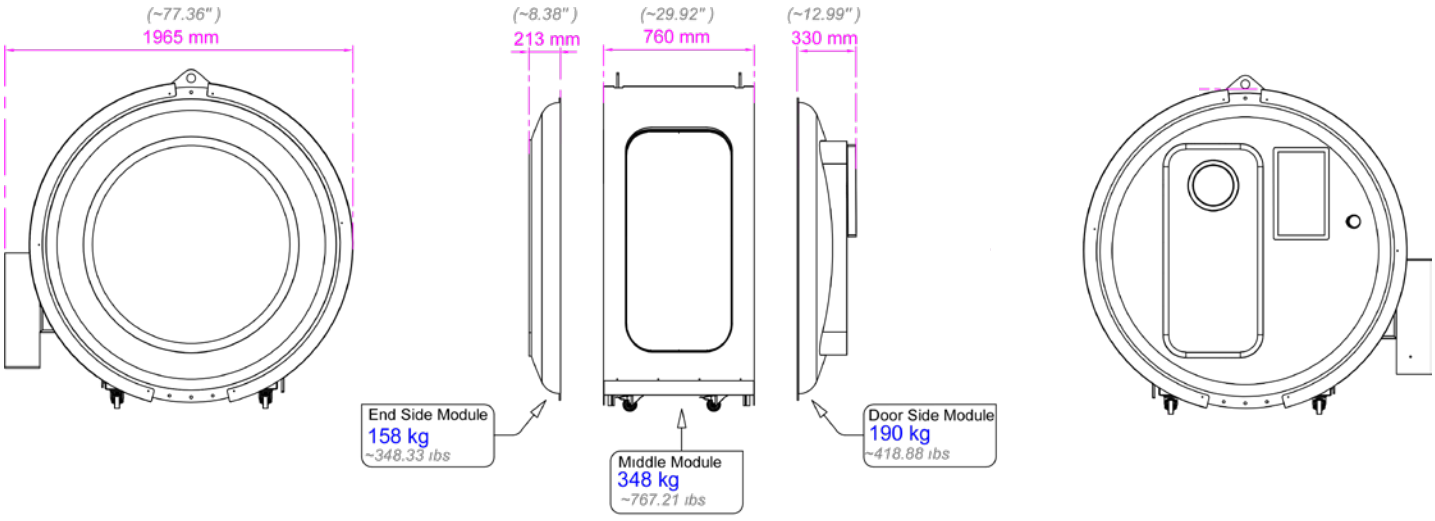

Hyperbaric chamber (pressure vessel)

- The pressure vessel is built of 1 central module, including two (2) steel end heads (right and left).
- The central module features a frontal acrylic window, while the left steel module features a large round acrylic window.
- The door on the right module also features a small round window.

2. The ZEUGMA hyperbaric chamber system

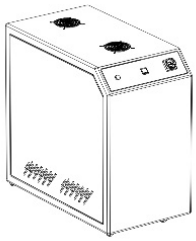

Air Compressor (Air supply)

- The standard chamber uses breathable air for pressurization.
- An optional compressed air system is available.
- Pressure + Oxygen are the two most important factors in HBOT

POWER
4HP

PRESSURE RANGE
1-8 bar/116 PSI

WEIGHT
67 kg
147.71 lbs

FLOW
564 LPM

NOISE LEVEL
62 decibel

SIZE
(W) 495 mm X (L) 1004 mm x (H) 804 mm
(W) 19.48 in x (L) 39.52 in x (H) 31.65 in

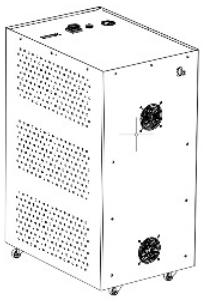

Oxygen Concentrator (Oxygen supply)

- The oxygen is provided by the Oxygen Concentrator (6.0 ATA working pressure);
- Patients breathe high-purity oxygen directly during treatment using the BIBS (Built-In Breathing System);
- Breathing masks are removed for air-breaks during treatment

POWER
2500 W
3,3 HP

OXYGEN FLOW RANGE
1~20 LPM

OXYGEN OUTPUT PRESSURE
5 BAR
72 PSI

OXYGEN PURITY
90%-93%

NET WEIGHT
155 KG
341.717 lbs

NOISE DB(A)
≤ 72 DB

DIMENSION
(L) 695 mm x (W) 481 mm x (H) 1070 mm
(W) 27.36 in x (L) 18.93 in x (W) 42.12 in

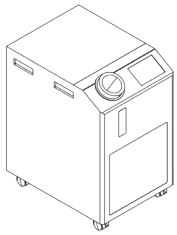

Air Cooler

- Ensures stable thermal conditions within the hyperbaric chamber.
- Offers a compact, highly efficient solution for precise climate control.
- Utilizes an air-cooled refrigeration system for exceptional reliability.
- Minimizes temperature fluctuations for consistent performance.
- Supports a wide adjustable temperature range to meet various operational needs.

COOLING CAPACITY
1500 W at 5°C
1500 W at 66° F

TEMPERATURE STABILITY
0.1° C
32.18° F

SET TEMPERATURE RANGE
5° C to 40° C
66° F to 104° F

COOLING METHOD
Air-cooled refrigeration

SIZE
(W) 377 mm x (L) 500 mm x (H) 640 mm
(W) 14.84 in x (L) 19.68 in x (H) 25.19 in



Built-In Breathing System (BIBS)

- BIBS delivers up to 93% pure oxygen to patients while minimizing fire hazards in the hyperbaric chamber.
- Chamber oxygen levels are maintained between 19% and 25% to prevent fire risks, per US Navy specifications.
- If oxygen levels exceed the limit, the chamber must be ventilated with air to restore safe levels.
- Chamber oxygen levels are monitored using electro-galvanic sensor cells to ensure safety.
- BIBS masks supply oxygen directly to patients and vent exhaled gas outside the chamber to prevent oxygen buildup.
- Masks can be secured with straps around the face.
- The system supplies oxygen on demand, only when the user inhales, similar to a diving regulator, and controls outflow to the chamber environment.
- Oxygen supply lines pass through the pressure hull, with valves on both sides, and connect to the external oxygen concentrator unit or directly to oxygen storage cylinders.
- BIBS is primarily used with medical oxygen but can also support other breathing gases.

2. The ZEUGMA hyperbaric chamber system

2.1. System features

The **ZEUGMA** chamber is a Class IIB hyperbaric chamber, designed for human use in compliance with NFPA 99 standards. It offers a range of features that enhance both patient care and operator functionality, including:

Key features



→ **Automatic pressure control**

Pressurization and depressurization are fully automated after setting the desired rates.



→ **Continuous patient monitoring**

The operator can hear, see, and monitor the patient throughout the treatment process.



→ **BIBS Masks for pure oxygen delivery**

All hyperbaric chambers include a Built-In Breathing System (BIBS) that delivers 90%-93% pure oxygen, enhancing tissue oxygenation.



→ **Backup power for communication**

A discrete power source ensures that chamber communications remain functional during a power outage.



→ **Medical monitoring capabilities**

Equipped with penetrations and electrical connectors to integrate vital monitoring systems such as EEG, ECG, TCOM, and blood pressure



→ **Pneumatic chamber controls**

The controls are entirely pneumatic, requiring only a compressed gas source for operation.



→ **Ventilation system**

The chamber can be ventilated anytime, including during pressurization.

→ **Certifications**

HpoTech Hyperbaric Chambers comply with key European and American standards (**ASME PVHO**), including **Medical CE (93/42/EEC, 2017/745/EU)** and **Pressure Equipment Directive CE (2014/68/EU)**. The ATLANTIS chamber is designed, manufactured, and tested to meet **EN 14931** standards, with design guidelines based on **EN 13445 or AD 2000**

▶ *See full list of company certifications at the end of the manual*

2.2. Technical sketches

Top view

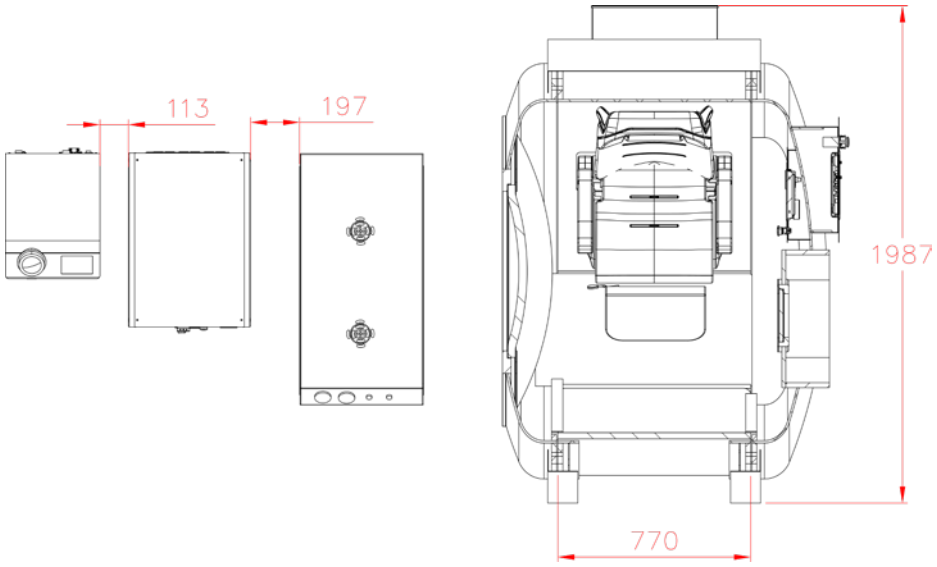

Front view

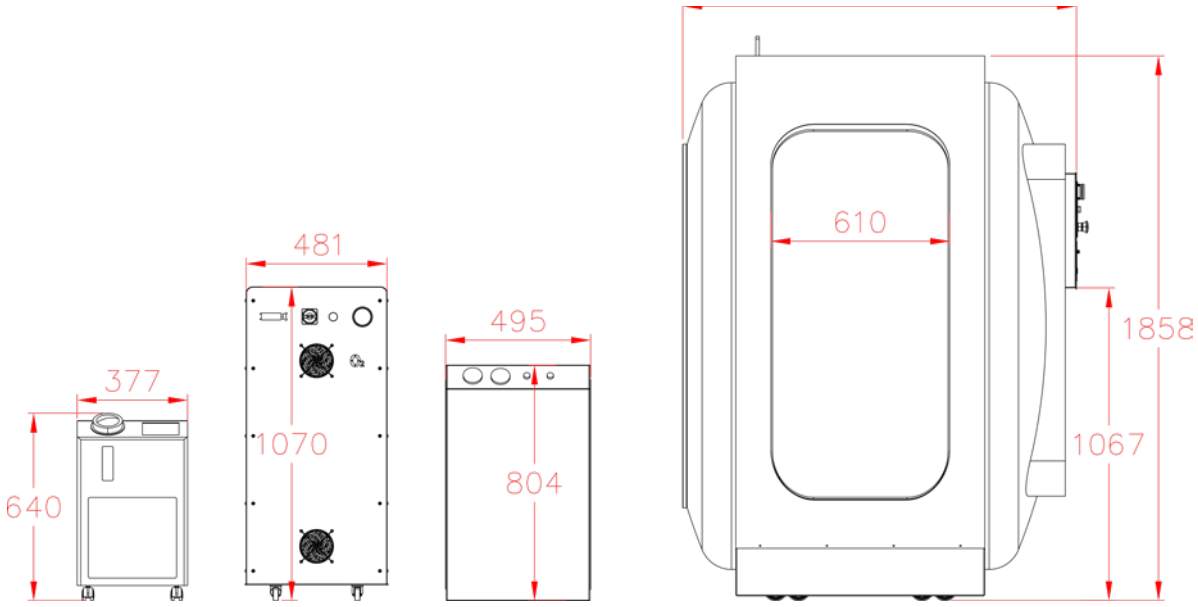

2. The ZEUGMA hyperbaric chamber system

2.3. Technical specifications

MAX. OPERATING PRESSURE

2.4 ATA (1.4 BAR)
34.80 PSI

DESIGN TEMPERATURE

0° C to 38° C
32° F to 100.4° F

AIR PRESSURIZATION
(Compressor Working Pressure)

3.45 bar to 7.2 bar
50.03 PSI to 104.42 PSI

AIR SUPPLY FLOW

250 LPM
8.8 CFM

BIBS OXYGEN SUPPLY

3.2 bar to 4.0 bar
46.41 PSI to 14.69 PSI

VENTILATION RATE

125 LPM to 400 LPM
4.41 CFM to 14.12 CFM

EMERGENCY DEPRESSURIZATION RATE

2.0 ATA to 1.0 ATA in 90 sec (1.0 BAR to 0 BAR)
14.5 PSI to 0 PSI

MAXIMUM PATIENT WEIGHT

225 kg
496.04 lbs

CAPACITY

1 Person (1 seat)

MATERIAL

Ballistic steel

SHAPE AND DESIGN

One-unit, cylindrical shape, 3 modules, designed to fit any standard doorway and space

MODULE WIDTH

770 mm
30.315 in

MINIMUM INSTALLATION FLOOR SIZE

2770 mm × 2885 mm
109.1 in × 113.6 in

OVERALL LENGTH

1344 mm
52.91 in

OVERALL WIDTH

1987 mm
78.22

HEIGHT

1858 mm
73.14 in

WEIGHT

806 kg
17777 lbs

INTERNAL LENGTH

1620 mm
63.77 in

INTERNAL VOLUME

1.9 m³

Paint

- The inside and outside of the pressure chamber are coated with flame-proof, non-toxic certified epoxy paint.
- Prior to painting, the cabin undergoes a sandblasting process to smooth the surface, which significantly extends the chamber's lifespan.
- The flame-retardant paint burns at higher temperatures compared to similar products, with combustion occurring only at the center of intense heat.
- Once the heat is removed, the combustion process naturally ends.
- The steam produced during combustion is harmless to human health, preventing risks from inhaling toxic gases.

Applied tests

During the production process, the hyperbaric oxygen therapy system undergoes the following rigorous tests to ensure safety, functionality, and compliance with industry standards:

1. **Hydrostatic Test**

   Evaluates the chamber's structural integrity by applying high-pressure water to check for leaks or weaknesses.

2. **Noise Level Test (EN 14931 Standard)**

   Measures the noise levels within the chamber to ensure compliance with the EN 14931 standard for patient safety and comfort.

3. **Air Leakage Test (Pressure Chamber Regulation)**

   Checks for any potential air leaks to guarantee airtight sealing and operational efficiency.

4. **Alarm Test**

   Verifies the proper functioning of all alarm systems to ensure prompt notifications in case of emergencies.

5. **Chamber Compliance Test (EN 14931 Standard)**

   Assesses the chamber's cabinet design to ensure compliance with the EN 14931 safety and performance standards.

6. **EN 12021 Breathable Air Test**

   Ensures the quality of the air supplied to the chamber meets the EN 12021 standard for breathing air purity.

7. **ASME PVHO Acrylic Test**

   Ensures the integrity of acrylic windows used in pressure vessels for human occupancy (PVHO). It involves pressure tests to verify strength, durability, and safety under operating conditions.

8. **Non-Destructive Testing (NDT)**

   Ensures weld quality without damage. Radiographic (RT) and Ultrasonic (UT) tests detect internal flaws, while Magnetic Particle (MT) and Penetrant (PT) tests reveal surface defects. These methods help maintain structural integrity.

These tests are essential to guarantee the reliability, safety, and effectiveness of the hyperbaric system before it reaches the end user.


hpo
tech
2HP
hpo
tech



3. Installation guidelines for the hyperbaric chamber

When installing the ZEUGMA hyperbaric chamber, certain guidelines must be followed to ensure safety and compliance with regulations.

3. Installation guidelines for the hyperbaric chamber

3.1. Dedicated chamber room

- The room must be solely dedicated to hyperbaric use.
- It should be constructed according to the **National Fire Protection Association (NFPA-99) "Standard for Health Care Facilities"**.
- Compliance with local and state codes is required, which will be verified by the local Fire Department

3.2. Location and Environmental Considerations

- **Avoid Heat Sources**

The chamber should not be located near heat sources or in direct sunlight. Install coverings on all exterior windows.

- **Lighting**

Use indirect lighting in the chamber room. Avoid placing lamps or other direct light sources near the chamber.

- **Temperature Control**

The room temperature should be maintained at 45°C, with a tolerance of ±4°C.

3.3. Fire Safety

- Install fire extinguishers of the appropriate type, class, and quantity as per fire safety regulations.
- Display visible "NO SMOKING" signs.
- Ground all electrical equipment and other devices capable of generating static electricity.

3.4. Flooring

- Tile flooring is required; conductive tile is preferred but not mandatory.
- Avoid using carpet, as it may interfere with gurney alignment and increase the risk of static electrical discharge.

3.5. Room dimensions and installation floor size

- The room size should be based on the number of units installed.
- For a single user unit, the room should measure at least 2770 mm × 2885 mm (109.1 in × 113.6 in).
- If a second unit is to be installed, add an additional 3 meters of width to the room.

3.6. Ventilation and Exhaust

- Install a vent (exhaust) that extends at least 8 feet (≥ 2.44 meters) above the chamber floor level, with protection against rain and insects.
- The exhaust line should have a ½" NPT (F) (1.27 cm nominal pipe size) fitting and extend 3 inches (7.62 cm) into the room.
- For multiple chambers, each unit requires its own exhaust line.
- Post a sign near the exhaust outlet warning of oxygen venting and prohibiting smoking in the area.

3.7. Grounding

- The chamber must be grounded to the equipment ground in accordance with NFPA 99 and NFPA 70.
- Additional grounding, such as earth or driven grounds, is not permitted.

These guidelines ensure proper installation and safe operation of hyperbaric chambers in healthcare settings.

3. Installation guidelines for the hyperbaric chamber

Technical plans → electrical and installation space sizes, EU

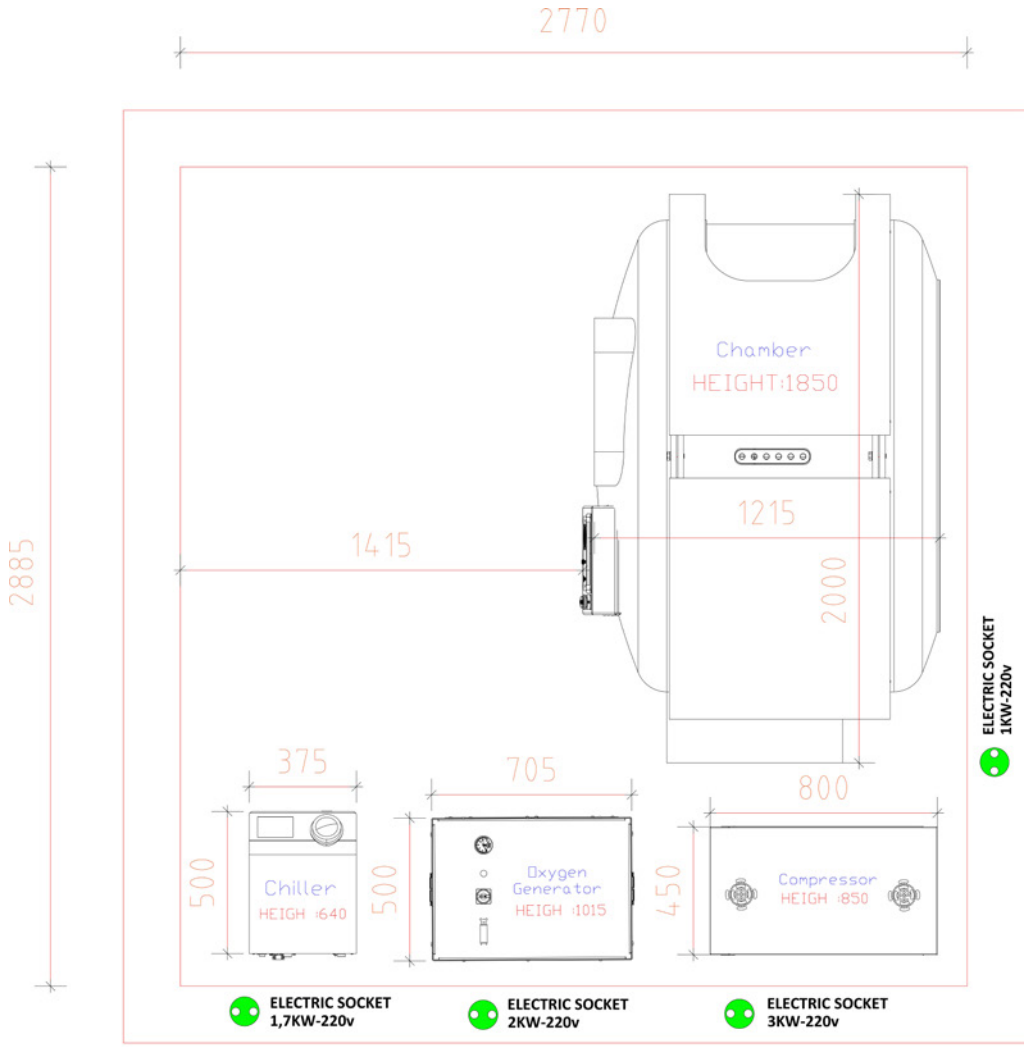

A ventilation system or a window opening to the outside is required for air circulation of 750 LPM. !!!

All devices emit heat to the environment with a total of 7 kW. The ambient temperature should not exceed a maximum of 26 degrees Celsius. !!!

Technical plans → electrical and installation space sizes, US

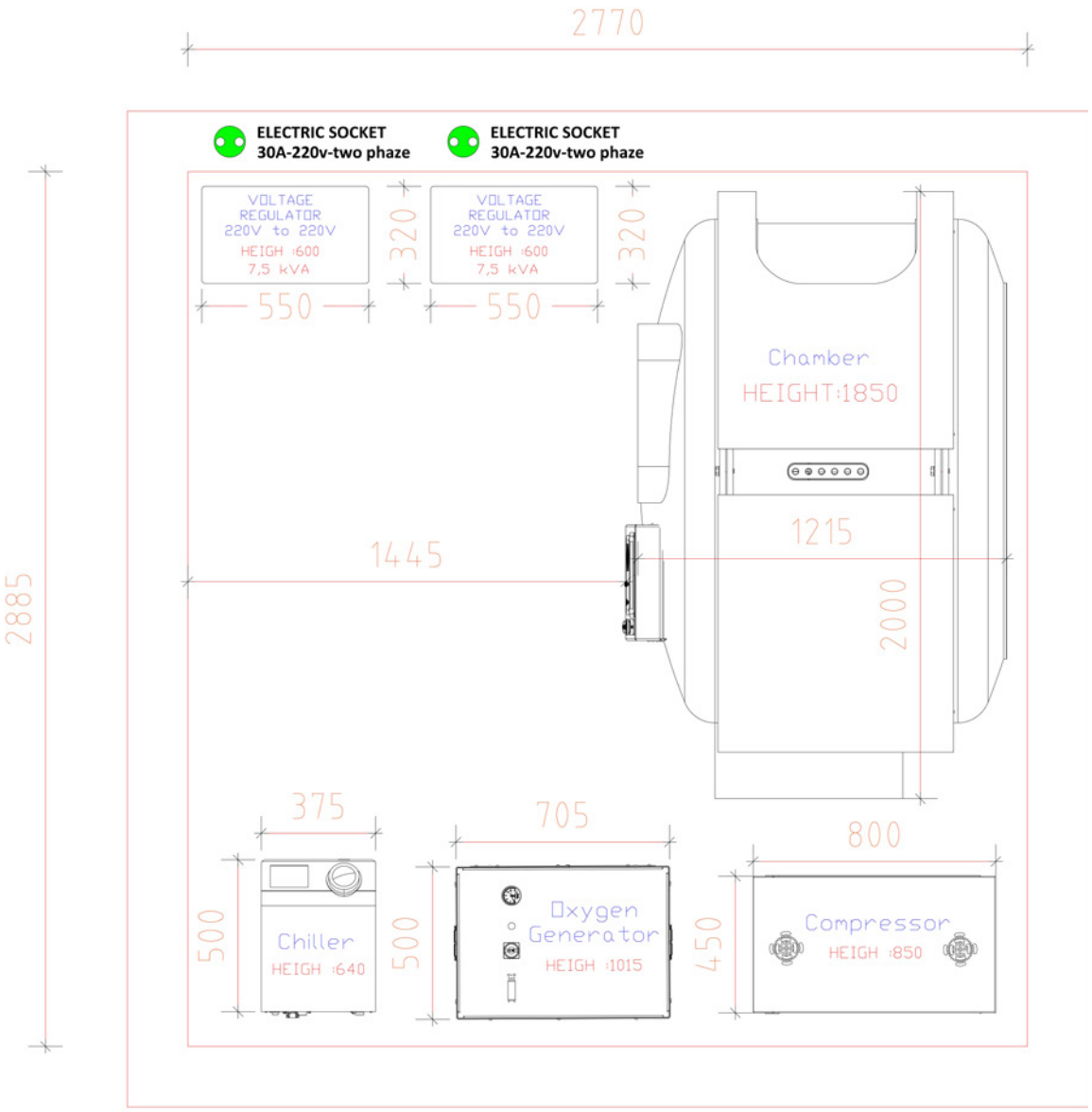

A ventilation system or a window opening to the outside is required for air circulation of 750 LPM. !!!

All devices emit heat to the environment with a total of 7 kW. The ambient temperature should not exceed a maximum of 26 degrees Celsius. !!!





4. Safety

Read the following safety rules carefully and completely before attempting to operate the ZEUGMA hyperbaric system. The high partial pressures of oxygen encountered in the use of the hyperbaric oxygen chamber require a thorough knowledge of the hazards associated with this environment and strict adherence to all safety precautions.

4.1. General safety rules

Prohibited items and chamber contamination

- **No unauthorized items**

Only items approved for hyperbaric chamber use should be brought into the chamber.

- **Sealed containers**

Open or vent all sealed containers before entering the chamber to prevent implosion and potential harm. Prohibited items include sealed bottles, syringes, and ampoules.

- **Flammable materials**

Never introduce flammable liquids, gases, or other materials prohibited by NFPA-99 standards into the chamber.

- **Clear signage**

Post warning signs at the chamber entrance regarding prohibited items.

4.2. Safety precautions

- **Emergency procedures**

In case of an emergency, immediately terminate the session and safely evacuate the chamber. Avoid physical damage to the chamber.

- **Installation**

Ensure the chamber is placed on a flat, level surface.

- **Chamber integrity**
  - Do not modify the chamber by drilling, welding, or applying chemicals or abrasives to the body or door.
  - Report any cracks or damage immediately. If even hairline cracks are observed in the acrylic, immediately inform the manufacturer.
  - Never climb on the chamber. Report any seal deformation to authorized personnel. Do not attempt repairs.

- **Electrical safety**

Protect electrical equipment from damage. Avoid operating the chamber with damaged equipment or in wet conditions.

- **Fire safety**

Keep beverages and flammable materials away from the equipment. In case of fire, use the manual fire extinguishing system if the automatic system fails.

- **Static electricity**

Prevent the introduction of static electricity into the chamber by avoiding objects or materials that can generate static charges.

Warning

Endotrachael tube cuffs and catheter bulbs should be filled with normal saline, or sterile water. Do not use air.

No modifications to the chamber system or its support equipment may be made without the written approval of *Hpotech Medikal ve Teknik Çözümler*. To do so will void any warranty and could expose the patient and/or operator to injury.

4.3. Emergency procedures and safety guidelines

- **Pressure Irregularities**

In case of sudden pressure fluctuations, switch to manual control. If the safety valve fails to activate during a pressure surge, immediately open the emergency exit valve.

- **System Malfunction**

If hoses rupture or experience damage, close the shut-off valve, safely terminate the session, and contact technical support.

- **Maintenance**

Adhere to the scheduled maintenance and calibration program. Avoid using unauthorized paints or coatings on the chamber.

- **Safety Equipment**

Exercise caution when handling compressed springs. Do not attempt to disassemble valves.

4.4. General maintenance and safety guidelines

Equipment maintenance

- **Regular inspections**

Renew compressor air test reports every 6 months and safety valves every 5 years.

- **Equipment care**

Prevent blockage of the compressor air inlet duct. Avoid tampering with pressure regulator settings.

- **Fire safety**

Use only water-based fire extinguishers. Ensure fire extinguisher water tanks are always full.

- **Cooling system**

Prevent radiator overheating by turning off the air conditioning if necessary. Avoid damaging radiator cores and air conditioning pipes.

Chamber care

- **Acrylic protection**

Avoid scratching or striking the acrylic. Clean with non-abrasive cleaners and avoid using chemicals.

- **Door maintenance**

Ensure door seals are in good condition and replace deformed seals promptly. Maintain smooth contact between the door and chassis. Use only approved lubricants for door hinges.

- **Chamber operation**

Close the door securely before pressurization. Avoid placing hands or feet between the closing or opening doors.

Note
These guidelines are essential for the safe and efficient operation of the hyperbaric chamber. Regular inspections and maintenance are crucial for prolonging equipment life and ensuring user safety.

Chamber and equipment safety

- **Spare parts**

Use only original spare parts to maintain system performance and safety.

- **Chamber environment**

Prevent the introduction of flammable materials, batteries, or electronic devices into the chamber. Avoid using unauthorized lighting or cleaning agents.

- **Chamber integrity**

Regularly inspect door seals and hinges. Do not attempt to repair or modify the chamber without authorized personnel.

Emergency valve systems

Hyperbaric chambers are equipped with two primary safety mechanisms:

- **Safety valve**

This valve automatically opens when chamber pressure exceeds 1.1 times the operational pressure limit, preventing over-pressurization.

- **Emergency exit valve**

The operator manually operates this valve in case of safety valve failure or other emergencies.



Safety valve
If the water tank pressure exceeds 10% of the maximum working pressure, the safety valve will activate. Close control valves on dry air cylinders and contact technical support.

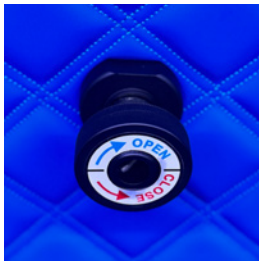

Manual override / Emergency exit valve
Use manual valves only when automatic valves fail to operate.

Safety precautions

- **Prohibited items**

Do not introduce plastic, prohibited items, batteries, or flammable materials into the chamber.

- **Emergency procedures**

In case of sudden pressure increase, close the air supply valve.

- **General safety**

Avoid physical contact with the chamber during operation. Do not tamper with the equipment or safety systems.

Fire safety and electrical precautions

- **Fire suppression**

Ensure fire extinguishing system electrical connections are intact and spray nozzles are unobstructed. Use only water-based fire extinguishers.

- **Electrical safety**

Maintain correct power supply voltage and frequency.

General safety

- **Emergency procedures**

Establish clear emergency procedures for pressure irregularities, equipment failure, and fire.

- **User safety**

Avoid physical contact with the chamber during operation. Follow all operating instructions and safety guidelines.

Compressed Air System Safety

- **Pressure control**

Always close all shut-off valves before working on the compressed air system. Gradually release pressure from equipment in a controlled manner. Avoid welding, heat treatment, or mechanical processes on pressurized systems.

BIBS system precautions

- In no circumstances hit, puncture, or weld the BIBS line pipes.
- Disinfect BIBS masks after each session.
- If the BIBS outlet regulator does not work, close the BIBS outlet valve.
- Do not remove BIBS regulators and do not open their covers.
- Prevent entering water, disinfectants, chemicals into the BIBS system.
- It is not recommended to perform the assembly, disassembly, and part replacement of BIBS system elements by unauthorized persons, as this will damage sensitive parts.
- Do not remove BIBS regulators and do not open their covers.
- Do not remove or loosen the BIBS system input apparatus on the chamber.

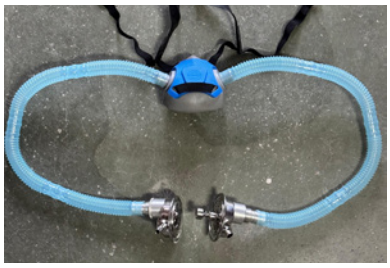

BIBS mask with hoses and regulators



BiBS mask without hoses



BIBS Regulators



5. Chamber exterior

The chamber room should be constructed following the “Standard for Hyperbaric Care Facilities”(NFPA- 99), including grounding the chamber and ensuring that all electrical equipment in the chamber room is following the appropriate NFPA standards.

Warning
Never allow equipment cases or housings to touch or become grounded to the chamber.

All fabrics and other materials used inside the chamber, including bedding and patient clothing, should be 100% cotton or approved anti- static material as per NFPA-99 recommendations.

Never permit Smoking, open flames, exposed filaments or any other source of sparking or ignition in the chamber room. “NO SMOKING” signs should be conspicuously posted. It is good electrical practice to not ground components in series. Always ensure the chamber grounding lead and connectors are maintained in good condition for proper ground continuity.

5.1. Chamber Interior Guidelines

To ensure safety and prevent hazards inside the hyperbaric chamber, the following rules must be followed regarding materials, equipment, and personal items:

Textiles and materials

- **Static-generating fabrics**

Do not allow silk, wool, or synthetic textile materials inside the chamber unless they are specifically approved for hyperbaric oxygen use, as they can generate static electricity. Only garments and sheets made of approved anti-static materials are permitted.

- **Plastic dressing materials**

Avoid the use of plastic dressing materials inside the chamber.

- **Dirty or oily clothing**

Dirty or oily garments must not be allowed inside the chamber.

- **Combustible materials**

Exclude items such as paper, magazines, excess bedding, lint, and dust, as they pose a fire hazard.

- **Chemical warming devices**

Hand warmers and other chemical heating devices are prohibited.

Cleaning and disinfection procedures

- **Medical-grade products**

Only cleaning products that are suitable for medical use should be used for cleaning the pressure chamber.

- **Manufacturer instructions**

It is the user’s responsibility to follow the product’s user manuals and clean accordingly.

- **Residue-free cleaning**

Cleaning agents should leave no residue or odor, particularly when cleaning inhalation masks.

- **Abrasive chemicals**

Avoid using abrasive chemicals, especially for cleaning the lumbosis, to prevent damage.

Prohibited personal items

- **Earplugs, contact lenses, and dentures**

Do not allow earplugs, hard contact lenses, or dentures. Soft, permeable contact lenses may be worn, but conventional eyeglasses are preferred when available.

- **Sharp or metallic objects**

Items like rings with settings, watches, pens, and other metallic objects should not be permitted inside the chamber.

Electrical devices

- **Permitted equipment**

Electronic devices, including laptops, can be used inside air-pressurized hyperbaric chambers only if the ambient oxygen concentration remains close to normal (~21%). Monitor the oxygen level inside the chamber on the control panel.

Using electronics, including self-energizing medical devices such as ECG, EEG, and T-COM is allowed inside the air-pressurized chamber, provided proper precautions are followed. All users must adhere to these safety guidelines to minimize potential risks.

- **Ground continuity**

Ensure that the stretcher rollers and support rails are clean to maintain proper ground continuity.

Patient screening

- **Check for prohibited items**

Each patient must be thoroughly checked before every session to ensure they are not carrying any prohibited items or materials.

Lubrication and prohibited products

- **Lubricants**

Only oxygen-compatible lubricants should be used for any parts that require lubrication. *Hpotech Medikal ve Teknik Çözümler* recommends using high-temperature-resistant grease.

- **Prohibited substances**

Do not allow oil, grease, alcohol, or petroleum-based products inside the chamber.

5.2. Electronics safety protocol

This protocol outlines safety guidelines for using electronic devices, specifically laptops, tablets or smartphones, inside an HBOT chamber pressurized with air while oxygen is delivered via BIBS (Built-In Breathing System) mask.

Electronic devices, including laptops, can be used inside air-pressurized hyperbaric chambers only if the ambient oxygen concentration remains close to normal (~21%). Monitor the oxygen level inside the chamber on the control panel.

Using electronics, including self-energizing medical devices such as ECG, EEG, and T-COM is allowed inside the air-pressurized chamber, provided proper precautions are followed. All users must adhere to these safety guidelines to minimize potential risks.

Pre-Use Checklist for Electronics

Before bringing a laptop (or any electronic device) into the chamber:

- Ensure the device is in good condition (no frayed wires, exposed circuits, or damaged batteries).
- Battery-powered use only. Charging inside the chamber is not permitted due to heat buildup and electrical risk.
- Check for overheating issues before entering the chamber.
- Use a laptop with a low-heat output and ensure ventilation is not obstructed.
- If applicable, verify that the device meets intrinsically safe certification (not mandatory for air-pressurized chambers but a best practice in high-risk environments).

Chamber Operational Guidelines

- Maintain Proper Ventilation: Ensure airflow inside the chamber remains unobstructed.
- No Loose Cables or Chargers: Only fully charged battery-operated devices are permitted.
- Device Positioning: Place laptops on a stable surface to prevent movement during pressurization.
- Monitor Device Performance: If the laptop heats excessively, turn it off immediately and notify the operator.
- Emergency Procedures: If any electrical issue arises (sparks, smoke, overheating), turn off the device and inform the operator immediately.

Operator Responsibilities

- Ensure all users understand and comply with these guidelines before entering the chamber.
- Inspect electronic devices before each session for any potential risks.
- Enforce emergency protocols in case of device malfunction.

Prohibited Items and Practices

- No use of devices with exposed wiring or damaged batteries.
- No charging of electronics inside the chamber.
- No use of high-energy devices (e.g., power banks, large battery packs) without explicit approval.
- No use of personal oxygen tanks near electronic devices to prevent localized high-oxygen environments.



WARNING
Non-recommended lubricants can ignite spontaneously in the presence of oxygen.



WARNING
The use of hair sprays, hair oils, oil-based cosmetics, creams, Vaseline, lotions, or other oils is forbidden. All such products must be removed from the patient's body and hair before entering the chamber.

These guidelines are essential for maintaining a safe and clean environment within the hyperbaric chamber.

5.3. Personnel requirements

Proper training and experience are essential for the safe operation of hyperbaric chambers. The following guidelines apply to personnel operating the chamber:

- **Training**

All personnel must be thoroughly trained in the operation of the hyperbaric chamber and possess a strong understanding of hyperbaric oxygen therapy.

- **Experience**

Selection of competent and experienced personnel is critical for safely using hyperbaric chamber systems.

- **Physician requirements**

The physician overseeing the treatment must be trained and proficient in administering hyperbaric oxygen therapy.

5.4. Patient safety guidelines

To ensure patient safety and comfort during hyperbaric treatment, the following procedures are recommended:

Pre-treatment preparation

- **Explain the procedure**

Explain the entire treatment process clearly to the patient, answering any questions they may have.

- **Eustachian Tube function**

Ensure the patient can clear their ears (e.g., swallowing or using the Valsalva maneuver) and understands how to do so.

Restrictions inside the chamber

- **No food or gum**

Do not allow chewing gum, candy, or any other food items inside the chamber.

- **Medication considerations**

Consider the effects of any medications, alcohol, or other substances on hyperbaric oxygen exposure.

During treatment

- **Communication**

Always inform the patient of impending pressurization or depressurization and explain how it will feel.

- **Visual contact**

Maintain constant visual contact with the patient throughout the treatment.

- **Breath-holding warning**

Remind patients never to hold their breath during depressurization to avoid injury.

Chamber operation safety

- **No unattended patients**

Never leave the chamber unattended while operating.

- **Movement restrictions**

Do not bump or attempt to move the chamber when it is pressurized.

By adhering to these guidelines, patient safety and comfort can be effectively maintained during hyperbaric oxygen therapy.

Important warnings: ear pressure and safety during treatment

Cold and respiratory infections

WARNING
Individuals with colds or upper respiratory infections may have difficulty clearing their ears during the pressurization or depressurization phases. This can lead to discomfort or injury.

Ear pressure and pain management

WARNING
If the patient is unable to equalize ear pressure or experiences pain during pressurization:

- **Stop pressurization immediately**

Cease the pressurization process at once if the patient is struggling to equalize ear pressure or reports any pain.

- **Depressurization for relief**

It may be necessary to slightly depressurize the chamber to relieve pain before continuing the compression process.



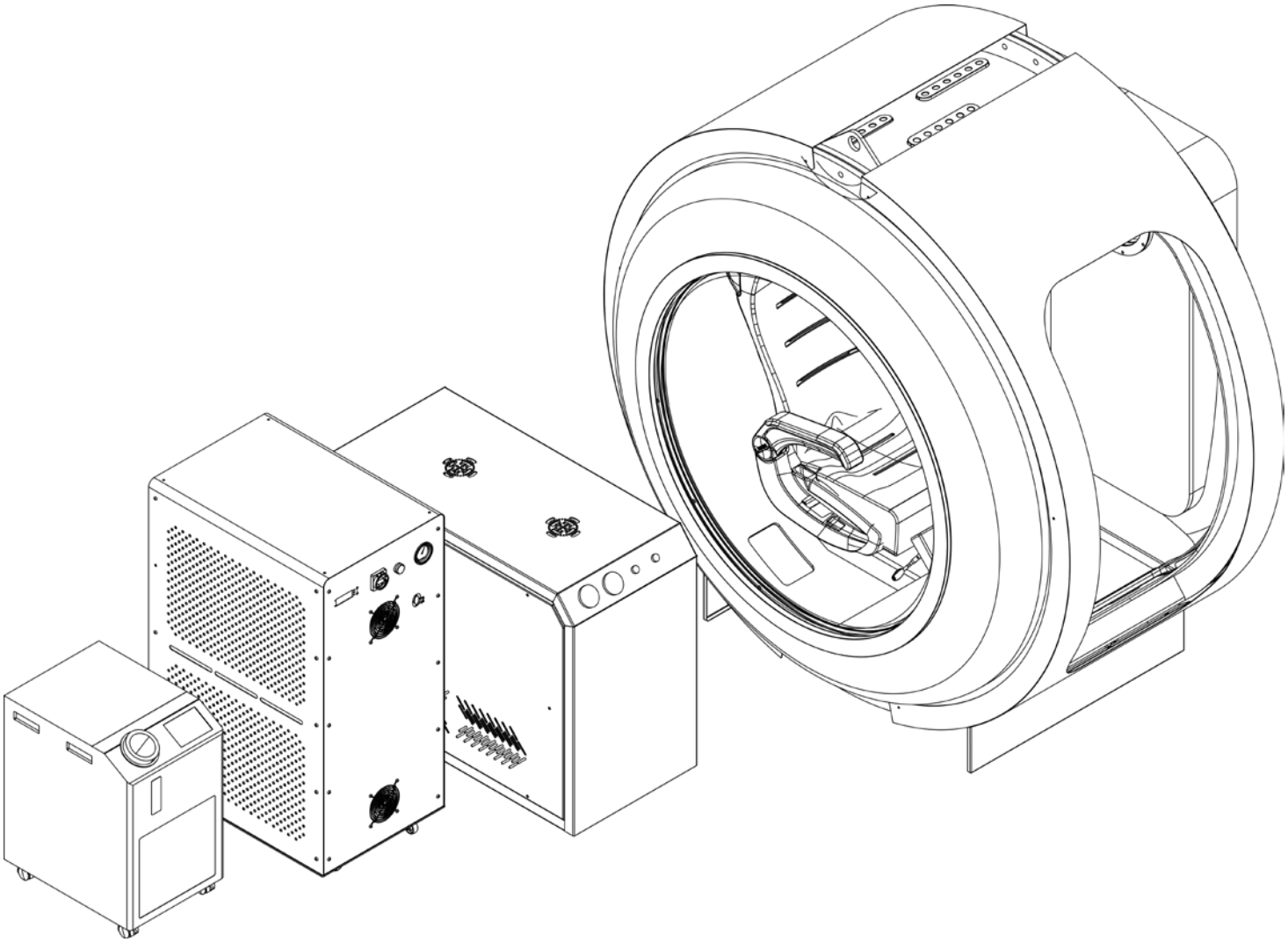

6. Device presentation

6.1. System components



Hyperbaric chamber → 1 seat

The Hyperbaric Chamber is engineered for safety, comfort, and efficiency, featuring a durable body, secure steel door with pressure locking, and airtight gaskets.

Key safety elements include a manometer, manual exhaust/emergency valve, and an Emergency Stop button.

Oxygen is delivered via BIBS regulators while users sit on ergonomic chairs.

An advanced sensor system provides LED and UVC lighting, a USB port, internal cooling, and real-time monitoring.

All functions are seamlessly managed through the HPOSOFT wireless automation system for intuitive control and performance.

External components



Air compressor → 1 unit

The Hyperbaric chamber is pressurized with breathable air from the Air Compressor. Pressure + Oxygen are the two most important factors in HBOT.

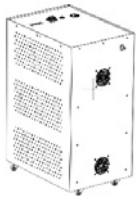

Oxygen concentrator → 1 unit

During treatment, the user breathes high-purity oxygen supplied using the Oxygen Concentrators (5.0 ATA working pressure), directly into the BIBS (Built-In Breathing system). The number of Oxygen Concentrators is equal to the number of patients inside.



Air cooler → 1 unit

The system is connected to an Air Cooler to keep the air fresh inside the chamber and the temperature under control.

Components list

1. **External Control Panel**
   - 1.1. Screen - 10"
   - 1.2. Intercom
     - 1.2.1. Outside Volume
     - 1.2.2. Intercom On-Off
     - 1.2.3. Inside Volume
     - 1.2.4. Push to Talk
     - 1.2.5. Speaker
     - 1.2.6. Microphone
   - 1.3. Power Switch
   - 1.4. Manual Pressure Knob
   - 1.5. Manual Exhaust Knob
   - 1.6. USB - 2.0
   - 1.7. Emergency Button
2. **Internal Control Panel**
   - 2.1. Screen - 7"
   - 2.2. UVC Light
   - 2.3. UVC Sensor
   - 2.4. Speaker
   - 2.5. Emergency Button
   - 2.6. USB - 2.0
   - 2.7. Microphone
   - 2.8. Chamber Pressure Indicator (Interior)
   - 2.9. Internal Manual Drain Valve / Emergency Valve
3. **BIBS Panel**
   - 3.1. Seat Exhaust BIBS Regulator
   - 3.2. Seat Demand BIBS Regulator
4. **Top Panel**
5. **Lifting Lug**
6. **Seats**
7. **Electric Panel**
8. **Door Locking Piston**
9. **Chamber Pressure Indicator (Interior) (Duplicate reference of 2.8)**
10. **External Manual Drain Valve / Emergency Valve**
11. **Air Vent**


hpotech
hpotech

6.2. COMPONENTS DESCRIPTIONS

1. External control panel

Controls located outside the chamber for operational management. Navigate manual and automatic pressure adjustments, monitor vital information, maintain clear communication with the patient, and control every aspect of the chamber. Equipped with manual overrides and an emergency stop button for full preparedness.

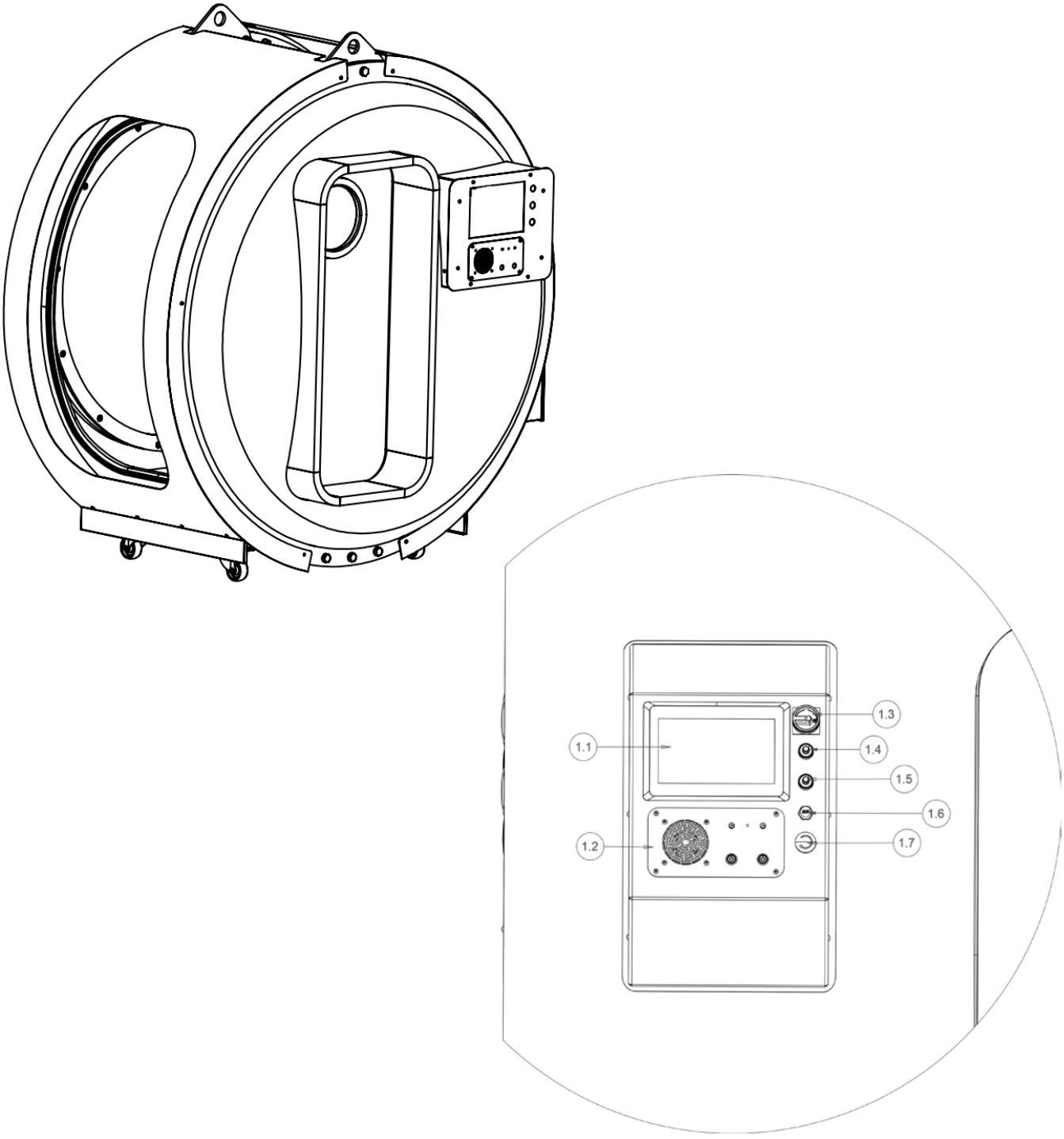

1.1. SCREEN → 10"

Main touchscreen display for managing and monitoring chamber functions. Set pressure and session parameters, lock the chamber door, and view real-time data on pressure, time, and vital stats.

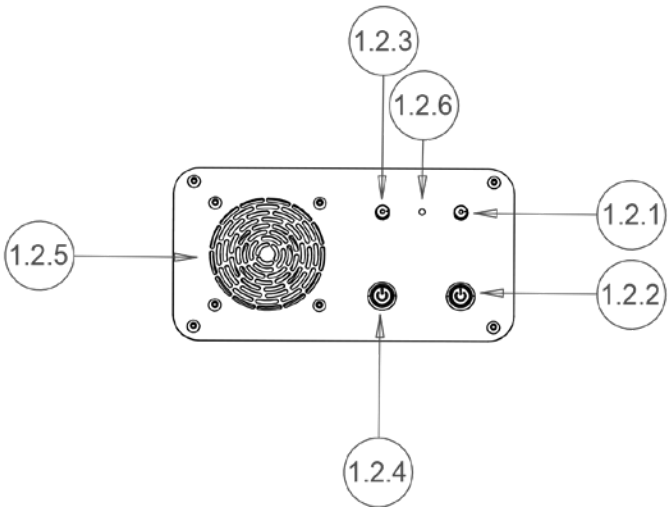

1.2. INTERCOM

Two-way audio communication system between the inside and outside of the chamber. Always active for clear communication, with adjustable volume.

1.2.1. OUTSIDE VOLUME

Adjusts speaker volume outside the chamber.

1.2.2. INTERCOM ON-OFF

Enables or disables the intercom system.

1.2.3. INSIDE VOLUME

Adjusts speaker volume inside the chamber.

1.2.4. PUSH TO TALK

Activates microphone for speaking.

1.2.5. SPEAKER

Outputs audio externally.

1.2.6. MICROPHONE

Captures voice from the external operator.

1.3. POWER SWITCH

Main switch to turn the system on or off. Activates electrical systems and control panels for manual or automatic HBOT sessions.

1.4. MANUAL PRESSURE KNOB

Manual control for increasing internal pressure. Allows independent compression control apart from the automated system.

1.5. MANUAL EXHAUST KNOB

Manual control for reducing pressure (venting). Enables manual decompression separate from the automatic system.

1.6. USB → 2.0

External USB port for downloading session logs in CSV format or performing system updates.

1.7. EMERGENCY BUTTON

Emergency stop control located outside the chamber. Instantly halts the session and safely depressurizes the chamber.

2. INTERNAL CONTROL PANEL

Occupant-operated interface inside the chamber. Allows the user to adjust pressure, time, and other settings while monitoring system data. All controls are mirrored with external access for safety and coordination.

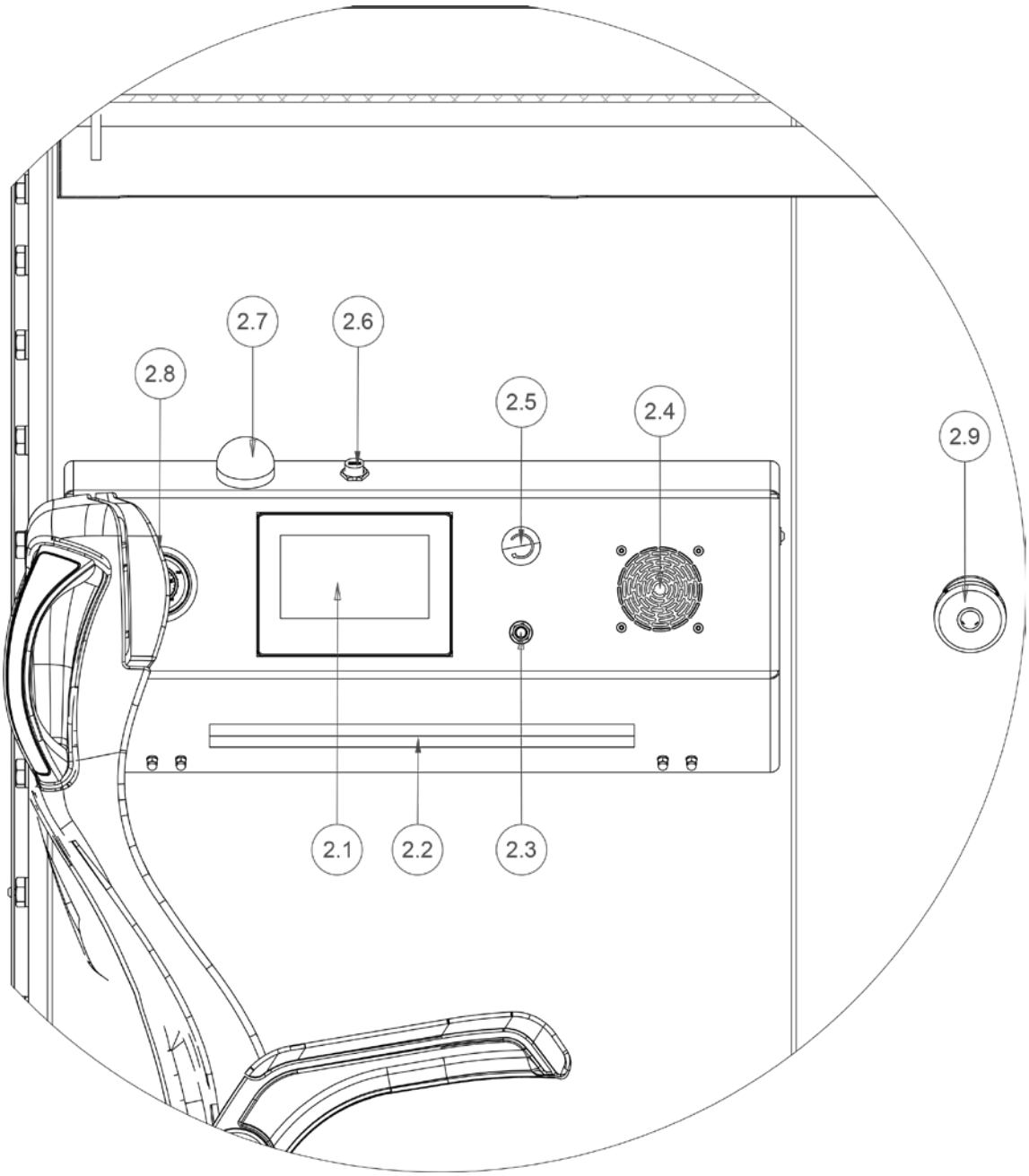

2.1. SCREEN → 7"

Touchscreen interface to manage pressure, session parameters, and view live data on chamber conditions.

2.2. UVC LIGHT

High-efficiency ultraviolet LED for disinfection. Ensures effective sterilization of the chamber environment.

2.3. UVC SENSOR

Monitors UVC LED status and exposure.

- Integrated with an occupancy sensor to disable the UVC LED when the chamber is occupied.
- UVC rays automatically shut off upon detecting a person inside, independent of the panel.
- Daily functionality check recommended before the first session.
- If sensor fails, manually turn off the UVC LED using the panel switch.

2.4. SPEAKER

Outputs audio for internal communication or alerts. Volume-controlled for clear sound.

2.5. EMERGENCY BUTTON

Allows occupant to initiate emergency shutdown and depressurization.

2.6. USB → 2.0

Internal USB port for downloading session data in CSV format or device connectivity.

2.7. MICROPHONE

Captures voice from the occupant for intercom use. Ensures constant two-way communication.

2.8. CHAMBER PRESSURE INDICATOR (INTERIOR)

Secondary gauge displaying internal pressure.

- Displays sensor-derived values via the touchscreen.
- In case of sensor failure, a calibrated manual manometer (≤1% deviation) serves as a backup.

2.9. INTERNAL MANUAL DRAIN VALVE / EMERGENCY VALVE

Manual pressure release valve for trained users.

- Allows gradual decompression from inside.
- If user is not certified, external valve control overrides internal use.
- When the external valve is closed, internal valve is disabled for safety.

3. BIBS PANEL

Control system for the Built-In Breathing System (BIBS).



3.1. SEAT EXHAUST BIBS REGULATOR

Controls air exhaust from Seat 1.

3.2. SEAT DEMAND BIBS REGULATOR

Regulates oxygen supply on demand for Seat 1.



BIBS Regulators

The BIBS regulators, comprising one demand regulator and one exhaust regulator, facilitate safe oxygen inhalation for the patient inside the pressure chamber. They should be opened, wiped with a damp cloth, and securely reassembled every six months. No chemical cleaners should be used in this process.

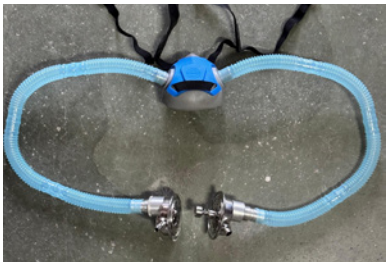

Mask connections for BIBS

The BIBS apparatus connects the oxygen from the regulators to the patient's mask. One hose will be connected to oxygen delivery, the other hose will provide carbon dioxide exhaust outside the chamber.

4. TOP PANEL

Houses internal wiring and components, including LED lighting.

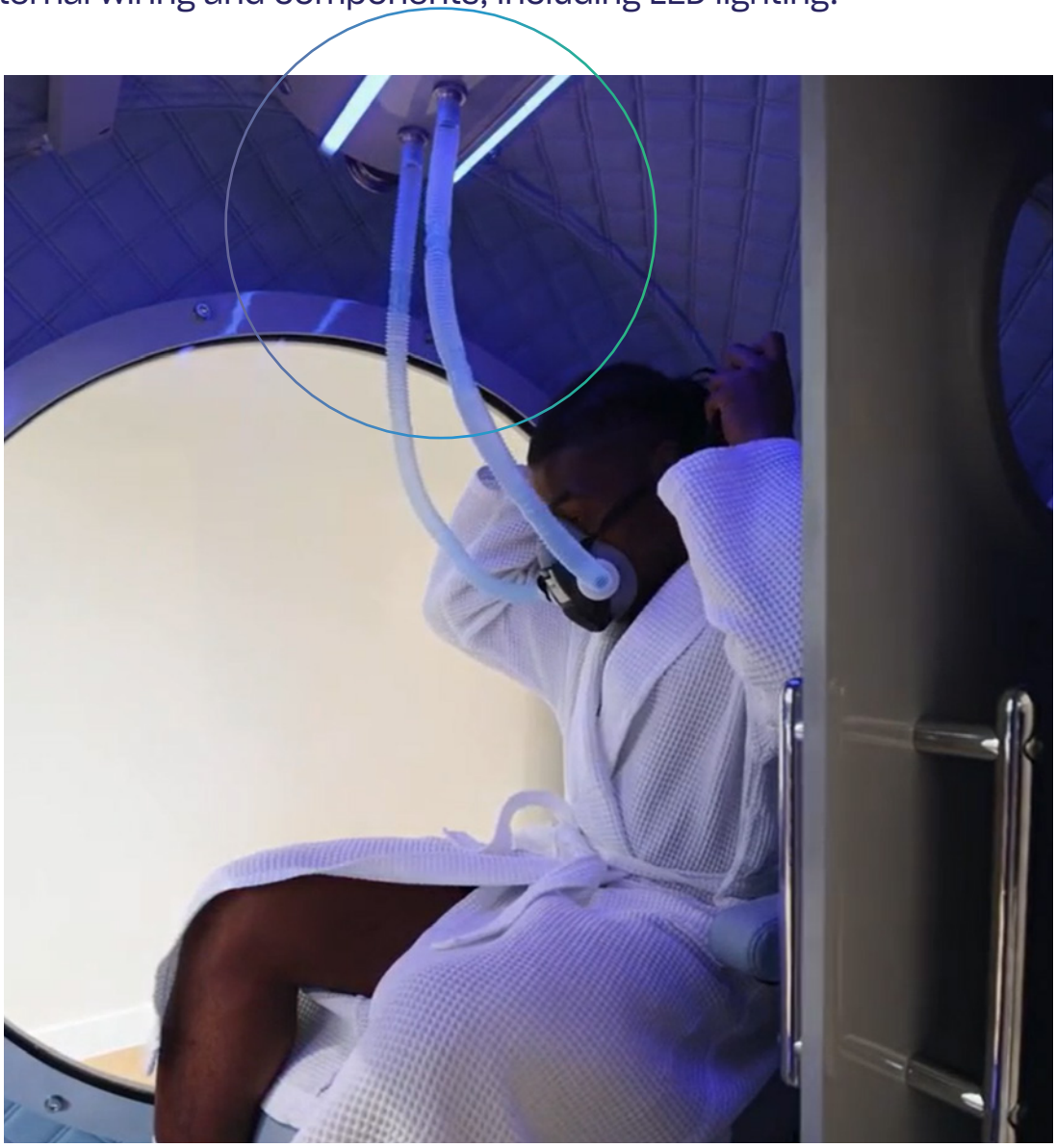

5. LIFTING LUG

Fixed mounting points for hoisting or relocating the chamber via crane or forklift.

6. SEATS

Occupant seating inside the chamber.

Seat type may vary (manual or automatic) based on user preferences.

7. ELECTRIC PANEL

Enclosure for electrical components and system wiring.

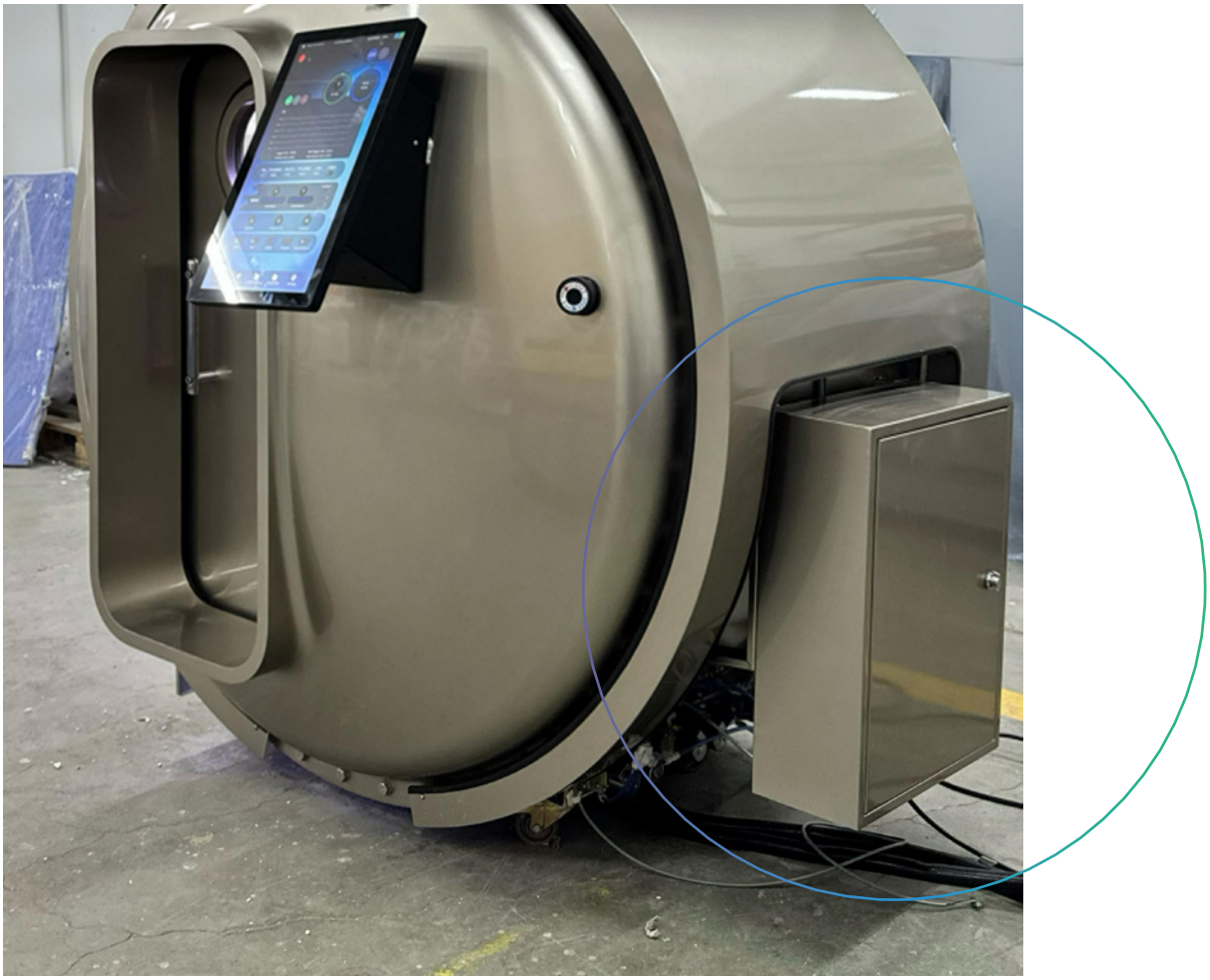

8. DOOR LOCKING PISTON

Sliding system for securely sealing or opening the chamber door. The piston does not start operation without closing the door. When the door closes, the piston is operated from the door-locking button on the tablet. The piston locks the acrylic door, pressuring the pressure chamber

9. CHAMBER PRESSURE INDICATOR (INTERIOR)

Duplicate of 2.8.

Displays internal pressure as a backup to the automated system.

- Uses manual manometer calibrated annually.
- Only manometers with ≤1% deviation permitted.



10. EXTERNAL MANUAL DRAIN VALVE / EMERGENCY VALVE

Manual pressure release control from outside the chamber.

- Trained personnel may operate the valve gradually.
- If user is not certified, external valve overrides internal control for safety.
- When closed externally, internal valve is automatically disabled.

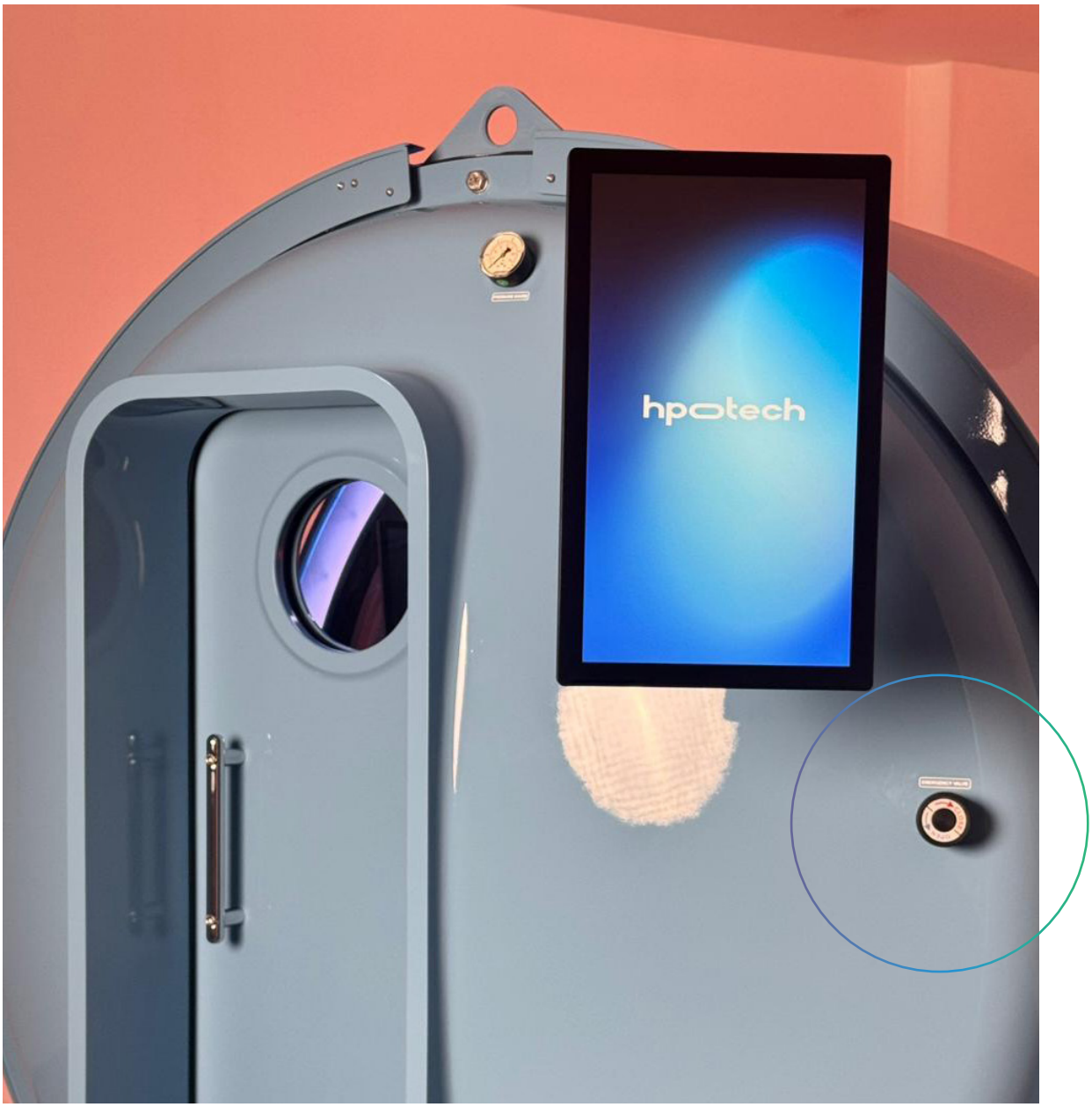

Safety precautions

- **Immediate action**

The operator must immediately open the emergency exit valve if the safety valve fails to activate during a pressure surge.

- **Valve maintenance**

Safety valves should be inspected and replaced every 5 years to ensure optimal performance.

- **Compressed air safety**

Uncontrolled release of compressed air can be hazardous. Always adhere to safety protocols.

11. AIR VENT

Allows controlled airflow inside the chamber to support ventilation, temperature regulation, or pressure stabilization without compromising safety or chamber integrity.

Internal cooling system



Air conditioning

An air conditioning system comprising indoor and outdoor units regulates the hyperbaric chamber's temperature and humidity, maintaining optimal conditions. The air is provided by the Air Cooler unit.

Overheat Protection

The system incorporates a safety mechanism to automatically deactivate the air conditioning unit in case of radiator overheating.

Internal unit

- Includes a cooling radiator to dissipate heat generated during the hyperbaric process.
- Employs fans to circulate air and enhance cooling efficiency.
- Features a climate control button to activate or deactivate the fans as needed.


hpo
tech
hpotech

6.3. ADDITIONAL FEATURES

Sensor System

The hyperbaric chamber is equipped with sensors strategically placed in both the main and entrance compartments to monitor critical treatment parameters.



These sensors measure and control:

- **Temperature and humidity**

Ensuring optimal patient comfort and preventing condensation.

- **Oxygen levels**

Maintaining the precise oxygen concentration required for therapy.

- **Pressure**

Accurately regulating and monitoring chamber pressure.

All sensors are CE certified to meet stringent quality and safety standards. Regular calibration and maintenance, as outlined in the equipment manual, are essential for accurate readings and system reliability. The user institution is responsible for adhering to this schedule to prevent potential issues.

Gaskets



- Special gaskets are used as sealing element in the door mechanism, feet and panels.
- Damage in the gasket causes pressure loss. Do not crush the door seals, protect them from any impact that will cause deformation.
- Replace deformed door gaskets as soon as possible, even if they do not cause pressure loss.
- Make sure that the parts of the door that press the body in the closed position are smooth. Check these parts regularly and clean them against rust and dirt.

LED Lighting

The main compartment and the entrance compartment are illuminated by LED bulbs. The bulbs do not produce heat and produce cold light. Strip lighting is designed and manufactured to run throughout the chamber in the main and entrance compartments.





7. Instructions of Use

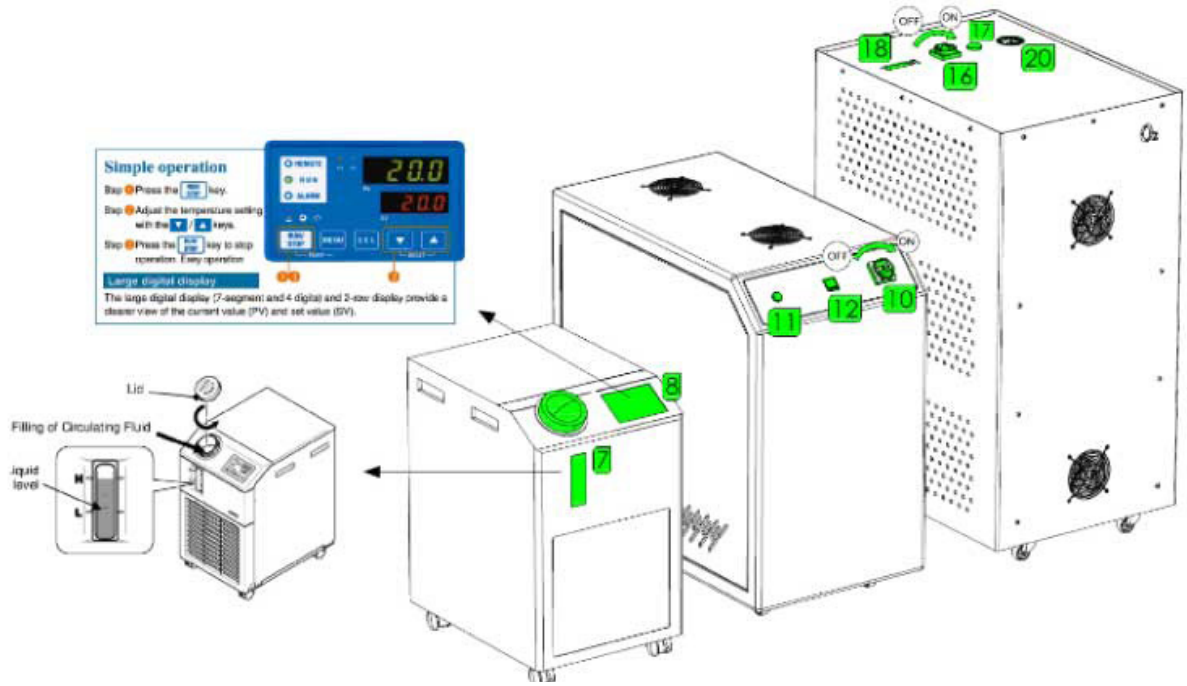

Follow this organized and numbered sequence for setting up the system.

Power Connections

1. Plug the chiller plug into the socket.
2. Plug the compressor plug into the socket.
3. Plug the first oxygen concentrator plug into the socket.
4. Plug the second oxygen concentrator plug into the socket.
5. Plug the chamber plug into the socket.

Chiller Setup

6. Press the **chiller power switch** to the “on” position.
7. Check the **chiller water level**:
   - “L” indicates the lower level, and “H” indicates the upper level.
   - Fill the water between “L” and “H”. Open the lid to fill, then close the lid.
8. Adjust the **chiller water temperature** and start the chiller by pressing the “RUN/STOP” button.

7. Instructions of Use

Compressor Setup

9. Turn the **switch on the back of the compressor** to the “on” position.
10. Turn the **compressor power switch** to the “on” position.
11. Check if the **LED light** is on.
12. Adjust the **compressor working pressure**.
13. Monitor the **compressor tank pressure**.
14. Turn the **drain valve** to the “on” position.
15. Turn the **main pressure valve** to the “on” position.

First Oxygen Concentrator Setup

16. Turn the **first oxygen concentrator power switch** to the “on” position.
17. Check if the **LED light** is on.
18. Check that the **information screen** is working.
19. Adjust the **oxygen pressure**.
20. Monitor the **oxygen pressure**.
21. Check that the **oxygen line** is open.
22. Turn the **main oxygen valve** to the “on” position.

Chamber Power Activation

23. Turn the **chamber power switch** to the “on” position.

General operating procedures for hyperbaric chamber

To properly operate the hyperbaric chamber, follow these step-by-step procedures:

Electrical and Compressor Setup

1. Turn the red operating button on the electrical panel clockwise from the “off” to the “on” position.
2. Verify that the compressor tank pressure reads “0” (zero).
3. Press the power button on the compressor.
4. Ensure the compressor starts running.
5. Wait until the compressor tank pressure reaches 7.5 bar.
6. Confirm that the compressor automatically stops when the tank pressure reaches 7.5 bar.
7. Open the compressor valve.

Chiller Activation

8. Press the start button on the chiller.
9. Wait 10 seconds after pressing the chiller button.
10. Confirm that no fault alarms sound from the chiller.

Chamber Control Panel Operations

11. Press the start button on the chamber’s external control panel.
12. Confirm that the external control panel starts operating.
13. Verify that the internal control panel is also functioning.

Intercom and Communication Systems

14. Adjust the internal and external intercom volume.
15. Test the intercom to ensure sound is transmitted correctly from inside to outside and vice versa.

Emergency Exit Valve Check

16. Test the emergency exit valve by rotating it clockwise and counterclockwise to ensure it moves freely.

Emergency Manual Switch

17. Turn the emergency manual switch on the electrical panel clockwise from the “off” to the “on” position.

7. Instructions of Use

Session Program Setup

18. On the chamber's external control panel, skip to the session information page.
19. Rotate the compression and decompression activation buttons clockwise and counterclockwise to ensure they function properly.
20. Verify valve operation via the program.

System Checks

21. Turn the chamber lighting on and off to confirm it works correctly.
22. Test the UVC sterilization by turning it on and off, ensuring proper operation.
23. Turn the chamber cooling fan on and off, confirming it functions as expected.

Acrylic Door Operations

24. Check that the acrylic door slider moves comfortably.
25. Close the acrylic door and lock it through the program, confirming it locks correctly.
26. With the acrylic door closed, unlock it through the program and confirm the door opens properly.

Internal Control Panel Operations

27. Perform the same checks on the internal control panel as on the external control panel, ensuring all functions are working properly.

Final Checks and Session Start

28. Close the emergency exit valve by turning it clockwise.
29. Close the acrylic door.
30. Restart the program.
31. Enter session information.
32. Press the forward button to reach the main screen.
33. Set the session time.
34. Set the session pressure.
35. Set the compression and decompression rates for the session.
36. Lock the acrylic door via the program.
37. Start the session.

By following these steps, you can ensure the proper and safe operation of the hyperbaric chamber.

Operator chamber usage and control instructions

Pre-session preparation (30 minutes before start)

Visual inspection

1. Check for any visible damage (scratches, cracks, etc.).
2. Inspect all regulators and circuits for leaks by entering the chamber.
3. Power on the chamber and verify the operation of lighting, entertainment, and communication systems
4. Ensure there is no burning smell inside the chamber.
5. Check the emergency exit valves:

- If controlling externally, ensure internal valves are open.
- Inspect doors, hinges, and seals for any issues.
- Confirm that the camera system is functioning properly.
- Briefly pressurize the chamber and check the oxygen analyzer for leaks in the oxygen system.
- Verify that the compressor is functioning correctly.

Before and during the session

Patient entry precautions

- Ensure patients do not bring prohibited materials inside.
- Check that patient clothing does not generate static electricity.
- Confirm that water pad covers are open.
- Advise female patients to avoid using flammable makeup products.

Ventilation requirements

- Ventilate the chamber for at least 2 minutes every 30 minutes, regardless of the oxygen level.
- If oxygen levels exceed 23%, continue ventilation until it is reduced below this threshold.





8. Emergency scenarios

This section outlines the procedures to follow in various emergency situations related to the operation of the **ZEUGMA Hyperbaric System**.

8. Emergency scenarios

Steps to take in the event of a power outage:

- Inform the patients immediately.
- Check the tank pressure if a new session is required.
- Verify the charge level of the **UPS batteries**.
- Ventilate the room by releasing the air.
- Safely remove the patients from the chamber.

Loss of communication

Steps to follow if communication is lost:

- Do not operate the chamber without a functioning communication system.
- If communication fails during treatment, **stop the system**.
- Contact **technical support** for assistance.

Fire in the room

In case of a fire in the chamber room:

- Extinguish the fire using a **fire extinguisher**.
- Open the chamber doors immediately.
- Safely remove the patients from the chamber.

Oxygen supply system malfunction

Actions to take when the oxygen supply system malfunctions:

- Close all main **oxygen supply valves**.
- Release the room pressure to a safe level.
- Safely remove the patients from the chamber.
- Contact **technical support** for repair.

Inability to maintain appropriate temperature

If the chamber fails to maintain the proper temperature:

- Check if the **air conditioning system** is operational.
- Review the **error message** on the air conditioning system, if applicable.
- Monitor the **room pressure**.
- Verify the reading on the **temperature meter**.
- Release the room pressure safely.
- Safely remove the patients from the chamber.
- Contact **technical support** for further assistance.
  Emergency procedure: Power failure while inside the chamber

8. Emergency scenarios

In the unlikely event of a power failure during treatment, please follow these steps to ensure your safety:

1. Stay calm

Power failures are manageable. Your safety is our highest priority, and our staff are trained to respond immediately.

2. Remain seated

Do not attempt to exit the chamber on your own. Please remain seated and await assistance from trained personnel.

3. Continue using oxygen mask

If you are wearing an oxygen mask, keep it on. In most cases, the oxygen supply will continue briefly even after a power loss.

4. Attempt communication

If the intercom is non-functional, gently knock on the chamber wall to alert staff to your presence and status.

5. Loss of lighting

Lighting and display screens may turn off. If the chamber is equipped with emergency lighting, it will activate automatically. If not, remain still and calm until help arrives.

6. Safe pressure release

A trained technician will manually and gradually depressurize the chamber. This process is controlled and may take several minutes. Once depressurization is complete, the chamber door will be opened manually.

7. Do not panic

Emergency protocols are in place and your safety is ensured. Follow any verbal instructions provided by staff. If written instructions are passed into the chamber, read and follow them carefully.

BIBS (Built-in Breathing System) dysfunction

Steps to take in case of BIBS dysfunction:

- Remove the **BIBS masks** and heads.
- Inspect the system to ensure that all equipment is functioning properly and free of dirt or obstructions.
- Close the main **oxygen valve**.
- Release the room pressure.
- Safely remove the patients.
- Contact **technical support**.

Loss of gas supply

If gas supply is lost during operation:

- Close all **gas supply valves**.
- Safely release the room pressure.
- Remove the patients from the chamber.
- Contact **technical support** for assistance.

By following these emergency procedures, you can help ensure the safety of both the patients and the equipment. Always prioritize communication with **technical support** to address any issues.

User Service Program

A comprehensive service program is available to all users of the ATLANTIS Hyperbaric System manufactured by HPO TECH. For information regarding annual service contracts, please get in touch with the office:

HPOTECH MEDİKAL VE TEKNİK ÇÖZÜMLER SAN VE TİC A.Ş

- Telephone: **+90 543 931 54 54**
- Telephone: **+90 506 118 94 05**
- Address: Ataşehir Ferhatpaşa, 49. Sk. No: 29, 34888 Ataşehir, İstanbul, Turkey
- **info@hpotech.com**
- **www.hpotech.com**





9. Warranty Terms and Conditions

9. Warranty Terms and Conditions

1. The warranty period begins on the date of delivery and is valid for **2 years.**
2. All components of the product are covered under warranty, except for issues resulting from **user errors.**
3. Parts requiring replacement or calibration as part of **routine maintenance** are not covered under the warranty.
4. The warranty will become **void** if periodic maintenance tasks, as specified by HpoTech, are performed by unauthorized individuals or companies.
5. The maximum repair period is **30 working days**, starting from the date the defect is reported to the manufacturer within the warranty period. If the product experiences a failure during the warranty period, the repair time will be **added to the remaining warranty duration.**
6. Any malfunctions caused by **improper use** of the product, contrary to the instructions provided in the user manual, are not covered under the warranty.
7. In case of disputes regarding warranty-related rights, the consumer may seek resolution through the **Consumer Arbitration Committee** or the **Consumer Court** in their place of residence or transaction.

Important Notes

The following maintenance tasks are the sole responsibility of the user and are **not covered under warranty:**

1. Calibration of components requiring periodic calibration.
2. Routine replacement of oxygen sensors.
3. Periodic weather analysis reports.
4. Compressor maintenance and filter replacements.

If requested, HpoTech provides spare parts and periodic maintenance services for an additional fee.

Pressure Vessel Lifecycle

- After undergoing a **pressure vessel test**, the chamber is certified for a **10-year operational lifespan** by an Approved Organization.
- Upon completion of 10 years, the chamber must undergo a **hydrostatic test.** If it passes, the metal wear rate is assessed, and a new operational lifespan is determined.
- If the chamber fails the test, it must be **disposed of** in accordance with the regulations of the respective country.


hpo
tech
CAN STONE



10.Certifications

HpoTech hyperbaric chambers comply with a wide range of international regulatory standards to ensure **safety, quality, and operational excellence.** These certifications are categorized based on their focus, covering medical device compliance, pressure vessel safety, product and occupational safety, quality management, and regional market approvals.

1. Medical Device Regulations

93/42/EEC → Medical Devices Directive (MDD)

This European Union directive ensures that HpoTech hyperbaric chambers meet essential safety and performance requirements for medical devices. Compliance with MDD guarantees that the chambers are suitable for therapeutic use within healthcare settings.

Medical Devices Directive (MDR) In process of certification

HpoTech is transitioning from the **MDD (Medical Devices Directive) certification** with the notified body **UBED** to the new **MDR (Medical Device Regulation) framework** with the notified body **ICIM.** A **letter of continuance** from ICIM, along with a contract outlining the transition process, ensures regulatory compliance during the certification shift. This transition reflects HpoTech's commitment to aligning with the latest EU medical device regulations for enhanced safety and performance standards.

MDA Malaysia → Medical Device Authority (MDA)

Regulates the approval and distribution of medical devices in Malaysia, ensuring that HpoTech chambers comply with local regulatory requirements and healthcare safety standards.

UKCA → UK Conformity Assessed

Applicable to the UK market, this certification confirms that HpoTech chambers meet post-Brexit regulatory requirements for medical devices, ensuring compliance with safety, performance, and environmental protection standards.

Medsafe → New Zealand

New Zealand's medical device regulatory body ensures that HpoTech chambers meet national healthcare standards for safety and effectiveness.

Thai FDA → Thailand

The Thai FDA ensures our hyperbaric chambers meet strict safety and performance standards before they can be legally sold. Approval signifies regulatory compliance, allowing distribution in Thailand.

10. Certifications

2. Pressure Vessel and Safety Regulations

ASME PVHO → Pressure Vessels for Human Occupancy

This American Society of Mechanical Engineers (ASME) standard ensures that HpoTech hyperbaric chambers are designed and built to safely accommodate human occupants under pressurized conditions, reducing risks associated with high-pressure environments.

PED → Pressure Equipment Directive

A European standard that regulates the design, manufacturing, and testing of pressurized equipment, ensuring HpoTech chambers can safely handle the pressures required for hyperbaric therapy.

Turk Lloydu → Hydrostatic Testing and Conformity Assessment

Turk Lloydu provides certification for pressure testing and structural integrity of hyperbaric chambers, verifying their safety and compliance with international hydrostatic standards.

3. Product and Occupational Safety Standards

2006/42/EC → Machinery Directive

This directive ensures the mechanical safety of HpoTech chambers, covering aspects such as moving parts, emergency stops, and user interfaces to protect operators and patients from mechanical hazards.

01/95/EC → General Product Safety Directive

Applicable to all products in the EU, this directive ensures that HpoTech chambers meet general safety requirements, providing end-users with reliable and hazard-free equipment.

NFPA → National Fire Protection Association

Establishes fire safety guidelines for hyperbaric chambers, ensuring compliance with strict fire prevention and suppression standards within medical environments.

ANEP 26 → Ergonomic Military Standards

Specifies ergonomic requirements for military applications, ensuring that HpoTech chambers meet human factors and usability standards for defense-related deployments.

4. Quality and Management Systems Certifications

ISO 13485 → Medical Devices Quality Management System

This certification confirms that HpoTech adheres to internationally recognized standards for medical device manufacturing, ensuring quality control throughout the product lifecycle.

ISO 9001 → Quality Management System

Demonstrates HpoTech's commitment to consistent product quality and customer satisfaction through rigorous quality control processes and continuous improvement initiatives.

ISO 45001 → Occupational Health and Safety Management System

Ensures that HpoTech chambers are manufactured under a management system that prioritizes employee safety and health in the workplace.

ISO 14001 → Environmental Management System

Confirms that HpoTech follows environmental best practices in its manufacturing processes, reducing ecological impact and ensuring sustainability.

ISO 27001 → Information Security Management System

Ensures that HpoTech protects sensitive patient and operational data through strict information security management protocols.

This comprehensive certification framework ensures that HpoTech hyperbaric chambers meet the highest standards of **safety, quality, and compliance**, providing healthcare providers and patients with confidence in their therapeuticuse worldwide.


CAN STOP ME



11. Software control

Pressure chamber control software and intercom system

The dedicated software allows the user to control the pressure chamber in both manual and automatic modes, manage communication with the patient inside, and halt the session to safely evacuate the chamber in an emergency.

Key software functions include:

- Controlling compression and decompression speeds
- Operating and stopping the in-cab cooler
- Monitoring chamber pressure
- Adjusting session duration and pressure levels
- Starting, stopping, and completing sessions
- Locking the chamber door

HPOSOFT Automation System

- The automation system is designed for controlling the chamber and managing sessions automatically.
- It includes automation software, an industrial PLC, sensors, valves, and a PC, with the PLC serving as the system's core unit. The software runs on both the PLC and PC, but all operations are controlled exclusively through the PC. Once powered on, the PLC automatically initiates its software.
- All connected devices, such as sensors and valves, are monitored and controlled via HPOSOFT. The specific devices monitored depend on customer configurations and may include temperature, oxygen level, pressure level, and humidity within the chamber.
- Only authorized operators or technicians should access the automation system.
- The Automation PC is dedicated solely to chamber control and session management. For safety reasons, it should not be used for any other purposes.
- System settings on the PC are crucial to automation software functionality, and modifying these settings may disrupt operations.
- Program files must remain in their designated folders, as relocating or deleting them may prevent the software from running properly.
- Session and patient records should be backed up regularly, either weekly or monthly, based on customer needs.
- Automation valves used for automatic session control are electrically managed by the PC and PLC. These valves are distinct from manual and emergency valves. If any valve is inactive, the automatic session will not start, ensuring safe and secure operation.

11. Software control

Basic functions of the Automation System

- **Automatic Session Control** based on speed, pressure, and time settings.
- **New Profile Entry** for custom session profiles.
- **Ventilation** of the chamber during automated sessions.
- **I/O Calibration and Additional Functions** for system optimization.
- **Logging, Reviewing, and Printing Tools** to manage the session database.
- **Entering Session and Patient Information** for accurate records.
- **Session Initialization** for automation software.
- **Valve Control with Dimmer** for precise adjustments.
- **Lighting On/Off** control.
- **UVC Sterilization On/Off** management.
- **Radiator On/Off** control for temperature adjustments.
- **Ear Equalization** to maintain comfort during pressure changes.
- **Session Recording** to log details of each session.

Critical functions

- **Automatic Compression and Decompression** of the chamber.
- **Monitoring** of temperature, humidity, pressure, and oxygen levels.
- **Audio/Visual Alerts** for operator notifications in specific situations.
- **Audible Warning and Safety Button** for immediate operator attention.
- **Valve and Compression/Decompression Rate Control** to maintain safe operation.

User session entry screen

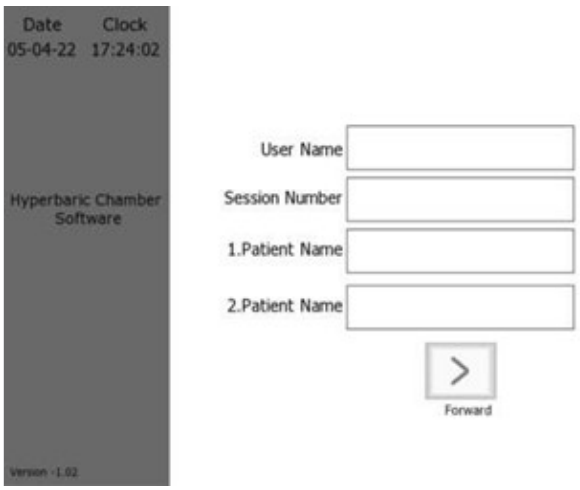

Starting an HPOSOFT User Session

1. Press the **On/Off button** on the panel to activate the system. The Tablet PC screen will open.
2. The **session opening screen** will display upon system startup, where the operator can enter the **Username**, **Patient Name**, and **Session Number**.
3. The **Session Number** indicates which session the patient is entering. Once all information is entered, press **Enter** to proceed to the next screen.

HPOSOFT Home screen overview

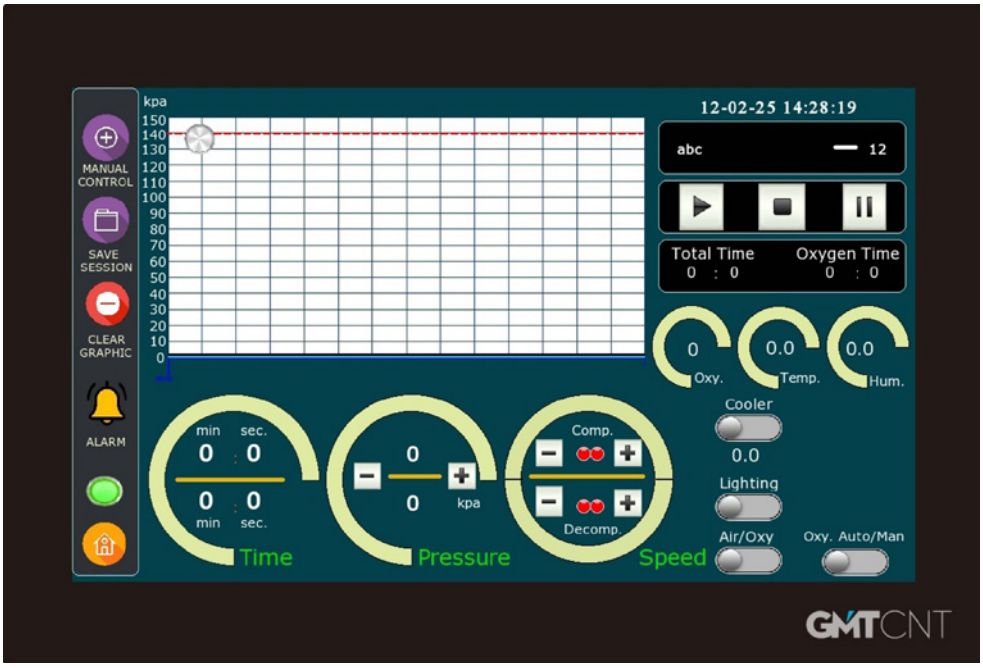

The HPOSOFT home screen is divided into six main areas, providing comprehensive control and monitoring capabilities. Key functions accessible from this screen include:

- **Session controls**

Start, end, and stop session functions.

- **Door locking**

Secure the chamber door during sessions.

- **Switching to Manual Control**

Toggle between automated and manual modes.

- **Screen recording and graphic cleaning**

Capture and manage session data visuals.

- **Internal control authorization**

Grant or restrict internal control access.

- **Session adjustments**

Configure session time, pressure, and compression/decompression speeds.

- **Environmental controls**

Toggle UVC sterilization, lighting, and radiator functions.

- **Oxygen monitoring**

Track and display oxygen levels in the chamber.

- **Display timers**

View total session time and current session duration.

- **Live pressure graphs**

Monitor real-time pressure and time graphs for session progress.

Step-by-step instructions for each session are clearly displayed on this screen, guiding the operator through the session process.

11. Software control

Entry of session properties

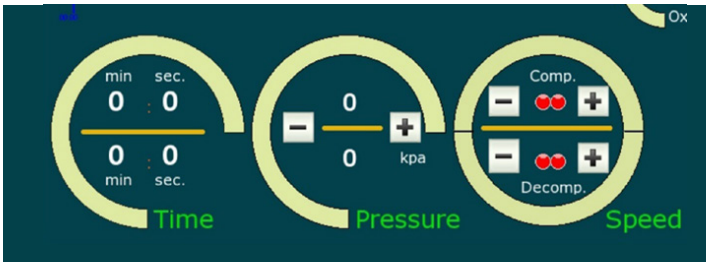

This is the first section to be configured when the main screen is opened. It allows the operator to set the key parameters for the session, including:

- **Session Duration**

  Adjust the total length of the session.

- **Session Pressure**

  Set the desired pressure level for the session.

- **Session Time Adjustment**

  Fine-tune the timing of the session to ensure optimal performance.

These parameters are essential for defining the session's conditions and ensuring the safety and comfort of the patient.

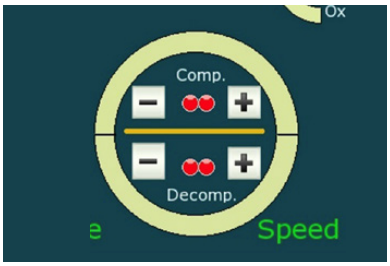

To set the session time, press the **"Time"** label inside the ring. A keyboard will appear for input, allowing you to enter a time value between the minimum of **1 minute** and the maximum of **150 minutes**. The entered value is in **minutes**.

The session time begins when the chamber reaches the set pressure value. Once the session is stopped, the session time will automatically pause or stop as well.

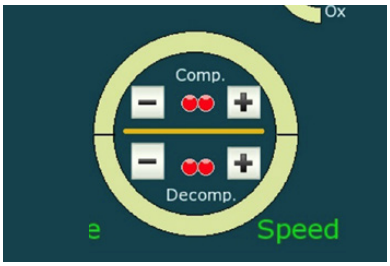

To adjust the session operating pressure, press the and buttons. A keyboard will appear, allowing you to enter a pressure value between the **minimum of 0 kPa** and the **maximum of 100 kPa**. The entered value is in **kPa** (kilopascals).

For reference, **10 kPa** is equivalent to the pressure at a depth of **1 meter** underwater.

Entry of session properties

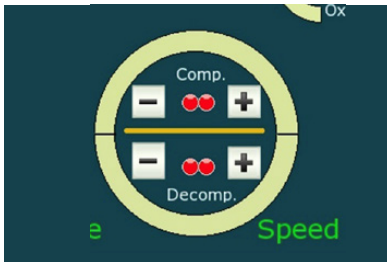

Session compression and decompression rates are adjusted on the side screen. Compression speed is adjusted from the left part and decompression speed is adjusted from the right part.

- There are **+** and **-** icon on both sides.
- The **+** increases the pressure value, while the **-** decreases it.
- These values can be adjusted at the beginning of the session or changed during the session.
- There are **2 red circles** on the right side of the screen and **2 red circles** on the left side.
- These show the status of the valves that regulate the compression and decompression rate. Red colors turn green when valves are open.
- These **red** and **green circles** are placed for technical service control. They do not need to be considered during use.

Session information

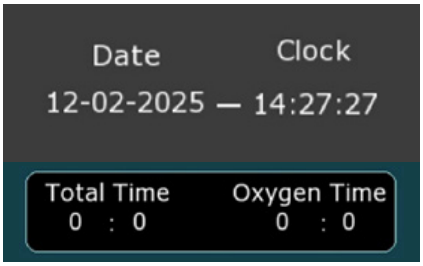

Session information is instantly taken from the relevant sensors and displayed in this section. Pressure, oxygen, temperature, and humidity values transmit information from sensors. Temperature and humidity indicator are shown in the same section. 5 sec temperature, 5 sec humidity value are displayed. Session time and total time are also calculated by the PC program.

The total time is the time from the start of the session to the end of the session. Session time is the time that shows how long the session will remain at the set pressure. Session time can be adjusted on the screen. Total time may vary depending on factors such as compression, decompression, and pauses.

Session status management



To set the session time, the “Time” letter written inside the ring is pressed and the minimum value of 1, maximum 150 is entered from the keyboard that appears for the time setting. The entered value is in minutes.

The session time starts when the chamber reaches the set pressure value. When the session is stopped, the session time also stops.

Press the + & - to adjust the session operating pressure and enter the minimum 0, maximum 100 value from the keyboard that appears for the pressure setting. The entered value is in kpa. 10 kpa is equal to the pressure of 1-meter-deep water.

11. Software control

Session status management



This control menu is used after the session time, pressure, compression, and decompression rates are entered into the program. At the top of the menu is the date and time. The date and time can be changed in the settings menu.

There is session start, session stop, session end and door lock buttons, respectively, under the time and date information.

From the functions in this menu, other functions other than session start can be retrieved. But there is no return when the session start button is pressed.

During the session, the session time, pressure, and speed can be changed by stopping the session or while the session is continuing.



- **Session Start button**

The session should be started after the door is locked. When the session start button is pressed, the session starts.



- **Session Pause button**

It is used to stop the session after the session has started. When the session is stopped, the total time of the session continues.



- **Session End button**

When the session end button is pressed, the pressure of the pressure chamber decreases at the set decompression rate. When the Chamber pressure drops to 10 kPa, the manual outlet valve should also be opened for faster chamber emptying.



- **The door must be locked first.**

To lock the door, the sliding door is closed. Then the door lock button is pressed. The door is locked when the button on the screen appears blue. The door cannot be unlocked during the session.



- **The side button puts the system in manual control mode.**

Manual control is controlled on a screen other than the main screen. When switching to the manual control screen, the system does not stop. When the activation button on the manual control screen is pressed, the system switches to manual control.

Session additional features



Indicates whether the session is under automatic control. If the session is in automatic control, the button is blue.

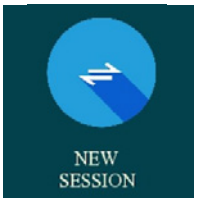

The side button starts a new session. All session information is deleted. The page returns to the start screen. Session information is re-entered.

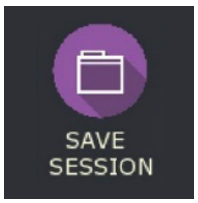

When the key is pressed, a screenshot is taken. The screenshot is saved on a Flash memory inserted into the USB port on the control panel. The memory must be formatted in Fat 32 format.



When the button is pressed, the graphic on the main page is cleared.



When the button is pressed, the tablet on the control panel inside the pressure chamber becomes active. By pressing this button again, authorization is taken from the internal control and the internal control does not work.

Time vs. Pressure gradient graph

The pressure-time graph displays how chamber pressure changes over the course of a hyperbaric treatment session. This chart is essential for monitoring treatments, allowing healthcare providers to review patient treatment data and obtain detailed session history.

When a session is recorded, the graph captures a visual record of pressure changes over time. As pressure increases, a blue line appears on the screen, tracking the session from start to finish.

The target treatment pressure is 100 kPa, and the graph provides a continuous visual representation to ensure the session follows the prescribed protocol.

11. Software control

Settings



Pressing the settings icon on the right side of the page opens the settingspage.

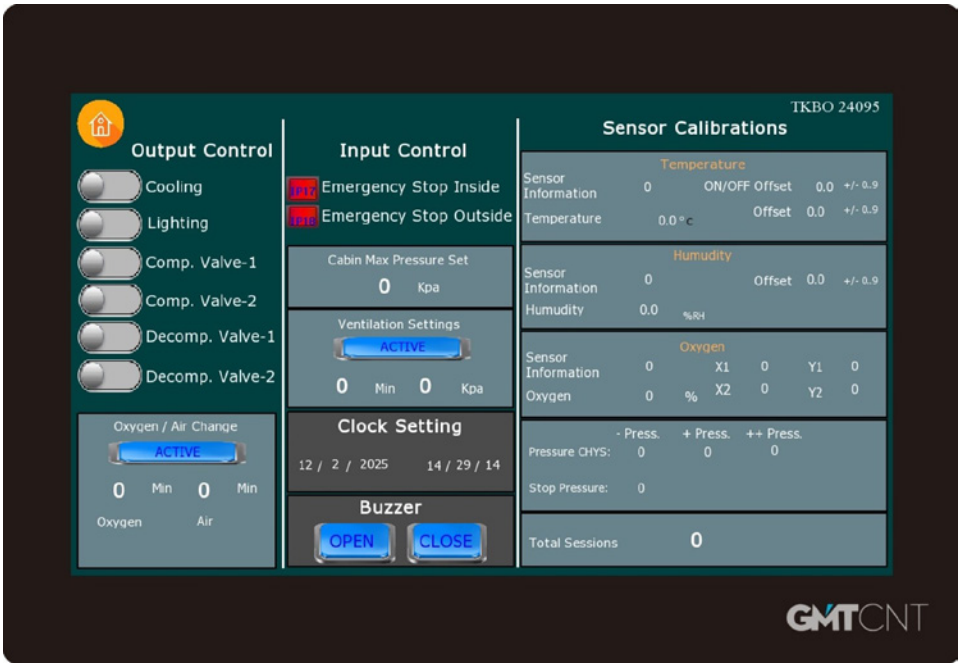

This menu should only be used by people with technical qualifications. After the control work is finished, all buttons should remain in the closed position and the black switch on the electrical panelshould be turned to the “off” position.

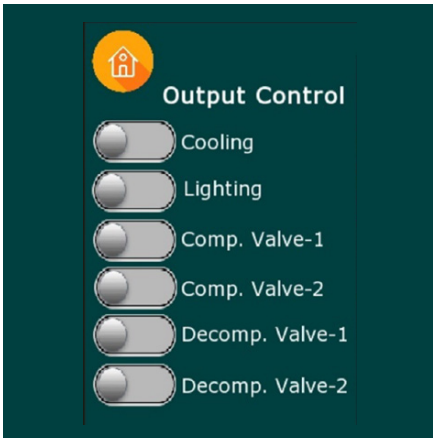

Chamber controls are tested via the menu on the left. To start these tests, the black switch on the electrical panel is brought to the “on” position.Each button on the Output Control menu is operated. Each button will activate the functions written on its right side. By operating each button, it is visually and audibly checked whether the function is working or not.

Settings

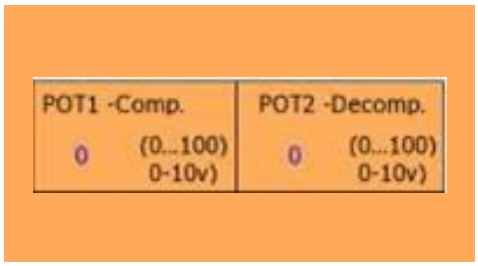

It controls 2 rotatable buttons on the external control panel. The pots on the panel are rotated. When the pots are rotated clockwise, the zero value starts to rise. Thus, it is understood that the pots are working. This menu should only be used by people with technical qualifications.

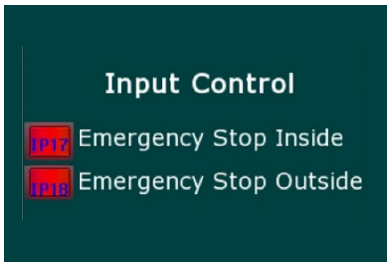

Inputs are tested via the menu on the left. To start these tests, the black switch on the electrical panel is brought to the “on” position. Each red box on the Input Control menu is examined. The buttons next to the boxes are activated over the chamber and it is seen that the red-lit boxes are green.



Time and date setting is made from the side menu. Touch the time and date digits. Data is entered from the keyboard that appears. Enter key is pressed. Press the Open button in the Buzzer menu to make a sound every time the touch tablet is touched. Press the Close button to mute the sound.

11. Software control

Settings



No	Date	Time	Temperature	Humudity	Pressure	Oxygen
77	12/02/25	14:30:46	0.0	0.0	0	0
76	12/02/25	14:30:40	0.0	0.0	0	0
75	12/02/25	14:30:35	0.0	0.0	0	0
74	12/02/25	14:30:30	0.0	0.0	0	0
73	12/02/25	14:30:25	0.0	0.0	0	0
72	12/02/25	14:30:20	0.0	0.0	0	0
71	12/02/25	14:30:15	0.0	0.0	0	0
70	12/02/25	14:30:10	0.0	0.0	0	0
69	12/02/25	14:30:05	0.0	0.0	0	0
68	12/02/25	14:30:00	0.0	0.0	0	0
67	12/02/25	14:29:55	0.0	0.0	0	0
66	12/02/25	14:29:50	0.0	0.0	0	0
65	12/02/25	14:29:44	0.0	0.0	0	0
64	12/02/25	14:29:39	0.0	0.0	0	0

Intervention in the sensor calibration section should only be done by the authorized service. Disruption of sensor calibrations causes the chamber to not work properly.

Detailed Graph and Data Logging

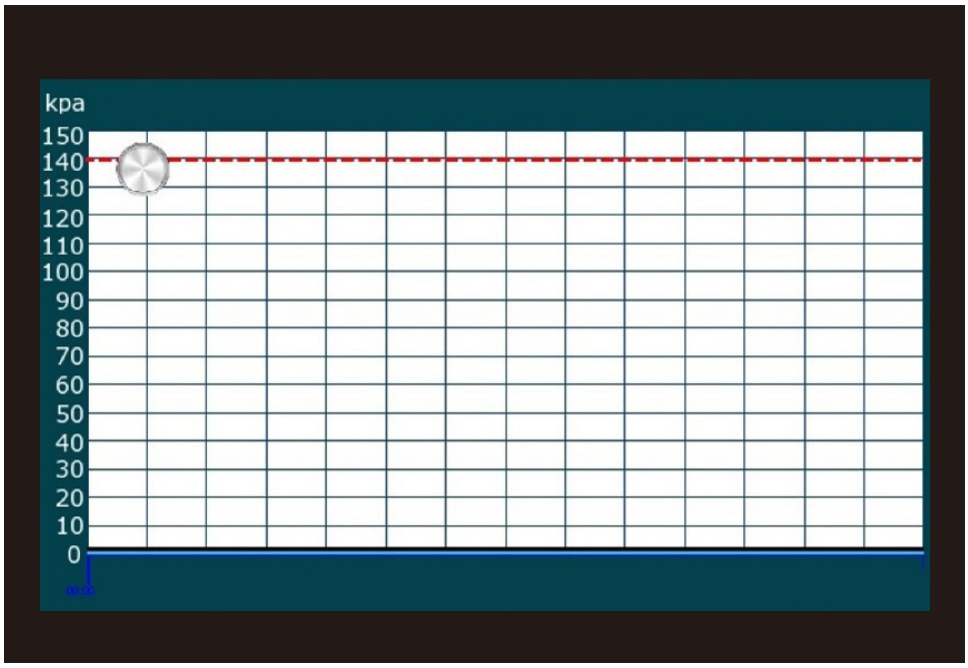

Pressing the button located at the **top right** of the screen displays a **detailed graph**, which includes:

- Total oxygen time
- Total session time
- Pressure-time graph

When oxygen is supplied through the masks, a **green layer** appears on the graph. This green layer remains visible for the duration that oxygen is being delivered, and during this period, the system counts the total amount of oxygen administered.

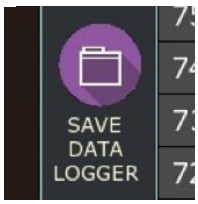

A data logger button is at the bottom right of the screen. When pressed, it records chamber pressure, temperature, and humidity values at **5-second intervals**. If a **FAT32-formatted USB** drive is connected to the panel's USB port, all recorded data—including date and time stamps—are automatically saved to the USB drive for further analysis.





12. Indications for use (IFU)

This Indications for Use document is designed to align with regulatory and clinical standards, ensuring that your HpoTech Hyperbaric Oxygen Therapy (HBOT) Chamber system is used appropriately and effectively.

1. Intended Use

The Hyperbaric Oxygen Therapy (HBOT) chamber is designed to provide oxygen therapy at pressures greater than atmospheric pressure under the supervision of a qualified healthcare professional. The chamber is pressurized with ambient air using an Air Compressor unit, and oxygen is delivered through a BIBS Mask using the Oxygen Concentrator unit.

This medically supervised treatment requires a physician's prescription. Patients are placed in a chamber that meets safety standards (ASME-PVHO-1 and NFPA 99) at pressures typically ranging from 1.9 ATA to 3.0 ATA.

During each session, which typically lasts 60-90-120 minutes, patients breathe medical-grade oxygen to support the treatment of specific medical conditions.

- Intended Users: Licensed physicians with training in hyperbaric medicine, supported by trained technicians.
- Target Population: Adults and children who meet the inclusion criteria for HBOT based on medical diagnosis.

2. Indications

The hyperbaric chamber is indicated for the following conditions, as evidenced in clinical research with specific protocols in the Clinical Evaluation Report (CER) document:

Approved indications (Medical use)

- Air or Gas Embolism
- Carbon Monoxide Poisoning
- Crush Injuries
- Decompression Sickness
- Delayed Radiation Injury
- Diabetic Foot
- Gas Gangrene
- Intracranial Brain Abscess
- Necrotizing Soft Tissue Infections
- Refractory Osteomyelitis
- Severe Anemia
- Skin Grafts and Flaps
- Thermal Burns

3. Target population for HBOT

The target population suitable for Hyperbaric Oxygen Therapy (HBOT) generally includes a wide range of age groups, depending on the treated condition and individual patient factors. The recommended age groups for HBOT can be categorized into the following intervals:

- Infants and Neonates: 0-2 years
- Children: 3-12 years
- Adolescents: 13-18 years
- Adults: 19-64 years
- Older Adults (Seniors): 65+ years

Each group may require specific protocols and precautions based on their physiological differences and medical conditions.

Adults

- The majority of HBOT treatments are designed for adult patients.
- Most indications, such as decompression sickness, carbon monoxide poisoning, and radiation injuries, are commonly treated in adults.

Precautions

- Careful monitoring of blood pressure and oxygen levels during therapy.
- Reduced session times or oxygen concentration may be needed to prevent adverse effects.

Pediatrics

- HBOT is suitable for children but requires careful consideration and supervision by a healthcare provider experienced in pediatric hyperbaric therapy.
- Common pediatric indications include carbon monoxide poisoning, severe anemia, and certain infections.

Neonates and infants

- Rarely used but may be considered for specific life-threatening conditions like severe hypoxia or ischemic injuries.
- Requires specialized equipment and highly trained professionals.

Elderly

- Elderly patients can benefit from HBOT, particularly for chronic conditions like radiation injuries or diabetic foot ulcers.
- Age-related health conditions (e.g., cardiovascular or pulmonary diseases) must be assessed to ensure patient safety.

Clinical consideration for all ages

- Patient suitability depends on thorough screening for contraindications, such as untreated pneumothorax, upper respiratory infections, or severe pulmonary conditions.
- Special attention should be given to patients prone to claustrophobia or those with pre-existing health conditions.

Pregnancy

While hyperbaric oxygen therapy (HBOT) has shown promise for a variety of medical conditions, it is crucial to consider safety during pregnancy. Generally, HBOT is not recommended for use during pregnancy unless prescribed by a medical professional and deemed essential to the treatment of specific conditions. Clinical studies are still limited in this area, so patients should consult with their healthcare provider before using a hyperbaric chamber.

Indications for Use in Pregnancy (when applicable)

- Severe carbon monoxide poisoning: When there is a risk of maternal or fetal harm from exposure to CO, HBOT may be considered as a life-saving measure.
- Certain wound healing conditions: HBOT may be recommended in exceptional cases for the treatment of severe burns or radiation injuries.

Precautions

- It is recommended to avoid HBOT during the first trimester unless medically necessary.
- Always seek approval from a qualified maternal and fetal health physician before starting any HBOT protocol.

4. Contraindications

The following conditions are contraindicated for HBOT unless assessed and approved by a qualified healthcare provider:

Absolute contraindications

- Untreated pneumothorax
- Certain chemotherapy agents (e.g., doxorubicin, bleomycin)
- Concurrent use of certain drugs (e.g., disulfiram)
- Upper respiratory infections or sinus barotrauma
- Severe pulmonary conditions or emphysema with CO2 retention
- Uncontrolled seizures

Additionally, patients with recent thoracic or abdominal surgery, pregnancy, or those prone to claustrophobia should be carefully evaluated for suitability. The following conditions are contraindicated for HBOT unless assessed and approved by a qualified healthcare provider.

Relative contraindications include

- Severe chronic obstructive pulmonary disease (COPD)
- Recent ear or sinus surgery
- Active upper respiratory tract infections
- Claustrophobia (unless mitigated by device features)

5. Warnings

- HBOT should only be administered under the supervision of a licensed medical professional trained in hyperbaric medicine.
- Patients with implanted medical devices (e.g., pacemakers) must be evaluated for compatibility with hyperbaric environments.
- Ensure thorough patient screening to avoid complications related to undiagnosed contraindications.
- Prolonged treatments or high oxygen concentrations may increase the risk of oxygen toxicity. Symptoms of oxygen toxicity, such as nausea, dizziness, or seizures, must be closely monitored and addressed immediately.
- Patients with a history of oxygen sensitivity or previous adverse reactions to HBOT require extra caution and tailored treatment protocols.

6. Precautions

- Patients must avoid wearing synthetic or flammable materials inside the chamber.
- Adequate hydration and nutrition should be ensured before therapy.
- In case of any discomfort (e.g., ear barotrauma), therapy must be paused for evaluation.
- Monitor patients closely for signs of oxygen toxicity, such as confusion, visual disturbances, or muscle twitching, especially during prolonged treatments or at higher pressures.
- Address potential claustrophobia by acclimating patients to the chamber environment and providing appropriate support or sedation if necessary.
- Ensure that patients with sinus issues or recent middle ear surgery are evaluated and pre-treated to minimize the risk of barotrauma.
- Provide clear instructions to patients about communication protocols inside the chamber and the importance of immediately reporting any discomfort or symptoms.
- Avoid bringing lighters or other pressurized containers that can explode under increased atmospheric pressure.

7. Recommended usage periods

The frequency and duration of Hyperbaric Oxygen Therapy (HBOT) sessions vary depending on the specific condition being treated and individual treatment goals.

Treatments are typically delivered multiple times per week, with each session lasting between 60 and 120 minutes. The total duration of therapy can range from a few weeks to several months, depending on the severity of the condition and the patient's response to treatment. Regular follow-up sessions may be suggested to maintain or enhance HBOT's benefits.

Some examples include

- Chronic wound healing often requires 5-7 sessions per week for 4-6 weeks, with longer durations for severe cases.
- Acute conditions like carbon monoxide poisoning or decompression sickness demand immediate treatment, with sessions lasting 90-120 minutes over 1-3 days.
- Radiation injuries and traumatic brain injuries may require 3-7 sessions per week for 3-6 weeks, depending on severity.
- Stroke recovery treatments are most effective when initiated within the first weeks and may continue for 4-6 weeks or longer for ongoing improvement.

General considerations

- Adjusting treatment protocols: A healthcare provider or therapist may adjust the frequency and duration of sessions depending on individual responses and progress.
- Cumulative benefits: For many conditions, HBOT's cumulative benefits are most apparent after several sessions, especially in chronic conditions or wellness optimization.
- Monitoring response: It is essential to monitor how a patient or user responds to HBOT. Some individuals may experience faster results, while others may require more sessions to see significant benefits.

These recommendations are general guidelines. For medical applications, treatment should always be individualized and prescribed by a qualified healthcare provider.

8. Post-session recommendations

Hydration and nutrition

After a hyperbaric oxygen therapy session, it is important to stay well-hydrated to optimize the body's recovery process. Oxygen helps the body process nutrients more efficiently, so replenishing fluids and consuming a balanced meal can support cellular repair and energy levels.

- Hydration: Drink at least 500ml of water following each session to ensure proper hydration and support optimal metabolic function.
- Nutrition: A meal containing lean proteins, healthy fats, and complex carbohydrates is recommended to promote tissue repair and energy restoration. Avoid heavy, fatty foods immediately after the session.

Rest and recovery

The body's tissues undergo repair during HBOT, so it's important to allow sufficient recovery time. Rest is essential for maximizing the therapy's benefits.

- Sleep: Adequate sleep enhances the healing process. Aim for 7-9 hours of restful sleep to support cell regeneration and cognitive restoration.
- Light activity: Low-intensity activity, such as walking or gentle stretching, is recommended on the day of treatment. Avoid strenuous exercise immediately after a session, as the body may still be in a recovery phase.

Monitoring and follow-up

Medical patients need regular follow-up visits with healthcare providers to monitor progress and adjust treatment plans as needed. Tracking how they feel post-session (e.g., energy levels, mental clarity, muscle recovery) can help assess the overall effectiveness of the therapy.

- Track improvements: Keep a journal or log to track progress on physical and cognitive improvements after each session.
- Consultation: After a series of treatments, a follow-up with a physician is recommended to assess the therapeutic effects and discuss future treatment plans.

Avoiding potential risks

Although HBOT is generally safe, some side effects can occur, particularly if the recommended protocols are not followed. Common issues include:

- Barotrauma: To minimize the risk of ear or sinus discomfort, patients should follow the guidelines for equalizing pressure during the treatment.
- Dehydration: Stay hydrated before and after the session to avoid potential dehydration.
- Fatigue: If you feel particularly tired after a session, it is important to take adequate rest to allow your body to fully recover.

By following these recommendations, users can ensure a more effective and comfortable recovery, enhancing the benefits of each hyperbaric session.



9. Side effects of hyperbaric oxygen therapy

HBOT lasts for a few hours. It may need to be repeated. The treatment may have side effects in some people. For example:

- Your ears may pop or you have mild discomfort in the chamber. These can be eased as the pressure is lowered.
- You may feel lightheaded when leaving the chamber.
- You may have nearsightedness after treatment. This usually gets better within days to weeks after the last treatment.

In rare cases, a person may have an eardrum rupture, lung symptoms, or a seizure. Having HBOT at a hospital with trained staff is the best way to prevent serious side effects.

10. Hazards and associated risks

- **Pressure-related risks**

- Barotrauma: Damage to tissues (e.g., ears, sinuses, lungs) caused by rapid pressure changes during compression or decompression.
- Oxygen toxicity: Prolonged exposure to high oxygen concentrations may lead to central nervous system (CNS) toxicity (e.g., seizures) or pulmonary oxygen toxicity.
- Decompression Sickness: Improper decompression protocols can result in "the bends," even in a therapeutic setting.

- **Fire hazards**

- Oxygen equipment: Strict no-smoking and no-flammable-materials policies are essential.
- Electrical sparks: Malfunctioning electrical devices or static discharge within or near the chamber could ignite a fire.

- **Equipment malfunction**

- Pressure regulation failure: Faulty valves or regulators may cause over-pressurization or under-pressurization, posing risks to patients and staff.
- Monitoring system failure: Inaccurate readings could result in improper treatment durations or pressures.

- **Human error**

- Improper training: Untrained operators may mishandle controls or fail to monitor patients adequately.
- Incorrect protocols: Deviations from standard operating procedures (SOPs) can lead to under- or over-treatment.

- **Patient-specific risks**

- Claustrophobia: Anxiety or panic attacks due to the confined space.
- Pre-existing conditions: Hyperbaric treatment may exacerbate conditions like untreated pneumothorax or certain cardiovascular disorders.
- Allergic reactions: Latex or other materials in the chamber may trigger allergic responses in sensitive individuals.

- **Infections**

- Cross-contamination: Shared use of chambers without proper disinfection can spread infectious diseases.

Hazards from foreseeable misuse

- **Unauthorized modifications**

- Tampering with pressure settings: Unqualified adjustments may lead to unsafe pressure levels.
- Use of non-compatible equipment: Connecting unapproved devices to the chamber can compromise safety.

- **Unsupervised or home use**

- Lack of medical supervision: Operating chambers without professional oversight increases risks of complications (e.g., oxygen toxicity).
- Improper maintenance: Poorly maintained chambers may fail during operation, posing serious risks.

- **Inappropriate applications**

- Unapproved indications: Using the chamber for non-evidence-based conditions (e.g., wellness trends) could result in harm or ineffective treatment.
- Improper patient selection: Treating individuals with contraindications (e.g., pregnant women, untreated pneumothorax) can lead to severe complications.

- **Material misuse**

- Prohibited items: Bringing flammable materials (e.g., alcohol, petroleum-based products) or electronic devices inside the chamber can ignite fires.

- **Extended sessions**

- Overexposure to oxygen: Sessions exceeding recommended durations or pressures can lead to oxygen toxicity or other adverse effects.

- **Ignoring warning signs**

- Delayed response to symptoms: Misinterpreting or ignoring symptoms like chest pain or difficulty breathing can escalate risks.

12. Indications for use (IFU)

Risk mitigation measures

- Strict training requirements: Ensure operators are adequately trained in safety protocols, pressure management, and emergency procedures.
- Pre-treatment screening: Assess patient suitability and rule out contraindications before each session.
- Comprehensive SOPs: Establish and enforce standardized protocols for chamber operation, patient monitoring, and emergency handling.
- Regular maintenance: Schedule routine checks and servicing of all chamber components.
- Emergency plans: Equip facilities with fire suppression systems, oxygen toxicity management tools, and first aid resources.
- Education: Provide clear instructions and warnings to patients about proper use and prohibited behaviors.

By addressing these risks proactively, the safe and effective use of hyperbaric chambers can be ensured while minimizing the likelihood of accidents or adverse outcomes.

11. Clinical considerations

The effectiveness of HBOT varies based on the condition being treated, patient health status, and adherence to prescribed treatment protocols. Clinical guidelines should be followed by recognized organizations such as the Undersea and Hyperbaric Medical Society (UHMS). For detailed information, refer to the official UHMS guidelines at https://www.uhms.org.

12. Documentation and Records

Healthcare providers must document patient assessments, therapy sessions, and outcomes to ensure compliance with medical standards and regulatory requirements.

13. Evidence and research:

The document was compiled using a comprehensive list of peer-reviewed studies, clinical trials, and scientific papers that support the efficacy and safety of HBOT for the outlined conditions, as published in the following sources:

- Undersea & Hyperbaric Medicine Journal
- Journal of Clinical Investigation
- The Lancet
- The American Journal of Surgery
- PubMed
- National Library of Medicine



User Service Program

A comprehensive service program is available to all users of the ATLANTIS Hyperbaric System manufactured by HPO TECH. For information regarding annual service contracts, please get in touch with the office.

HPOTECH MEDİKAL VE TEKNİK ÇÖZÜMLER SAN VE TİC A.Ş

Telephone: +90 543 931 54 54
Telephone: +90 506 118 94 05
Address: Ataşehir Ferhatpaşa, 49. Sk. No: 29, 34888 Ataşehir, İstanbul, Turkey
info@hpotech.com
www.hpotech.com