Parts:

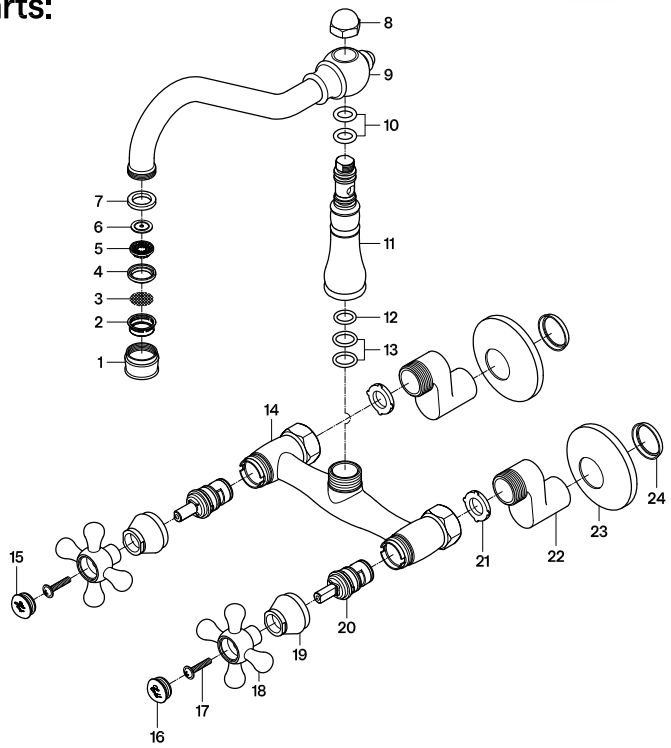

Replacement Parts:

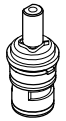

Cartridge: KC1000H

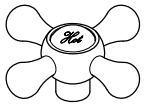

Hot Handle: KSH213H

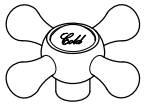

Cold Handle: KSH213C

KINGSTON

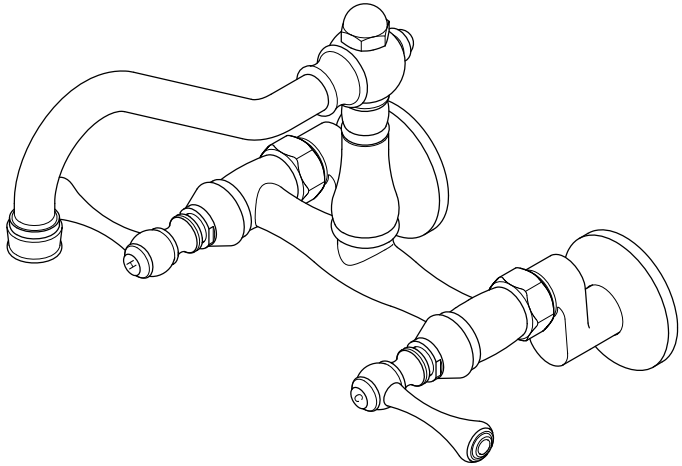

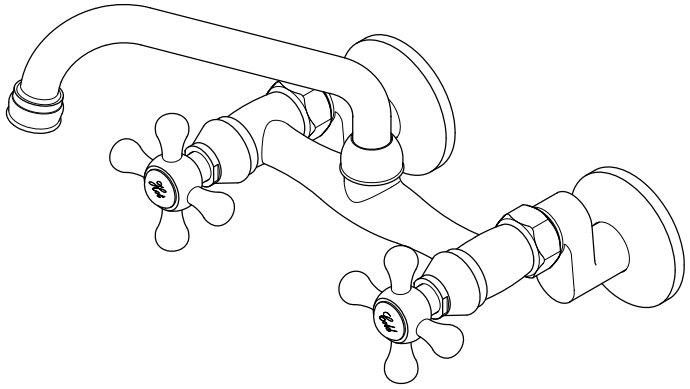

CARE AND MAINTENANCE OF YOUR FAUCET

Your KINGSTON faucet has been finished to the most strict standards; however, due to the high content of minerals in the water, your finish may appear dull and tarnished after time. These are some do's and don'ts to maintain the luster on your faucet for many years to come.

DO
1. Use a silicon based caulking when installing.
2. Clean your faucet with only a mild soap and water solution.
3. Dry your faucet after using it.
4. Give it a coat of Carnauba Wax periodically.

DON'T
1. Use plumbers putty when installing the faucet.
2. Use any abrasive cleaning agents.

It may seem like a very simple and short list but it is that simple to maintain your faucet, looking shiny and new.

If your faucet is already looking somewhat dull and tarnished, before replacing it, try cleaning it with a 50/50 solution of vinegar and water, you may need to soak some rags and wrap around those stubborn areas, leave
overnight and rinse completely in the morning, apply Carnauba wax once you have removed the mineral deposits.

www.kingstonbrass.com

TOLL-FREE CUSTOMER SERVICE: 1-877-2-KBRASS
TECHNICAL SUPPORT E-mail: service@kingstonbrass.com
12775 Reservoir Street, Chino, CA 91710

NOTICE

Failure to follow all directions may cause leaks which may result in water damage

⚠CAUTION

Failure to follow all installation directions may cause product to detach from the wall and cause serious injury

KINGSTON

INSTALLATION INSTRUCTIONS
Twin Handles Wall Mount Faucet

Need Tools:

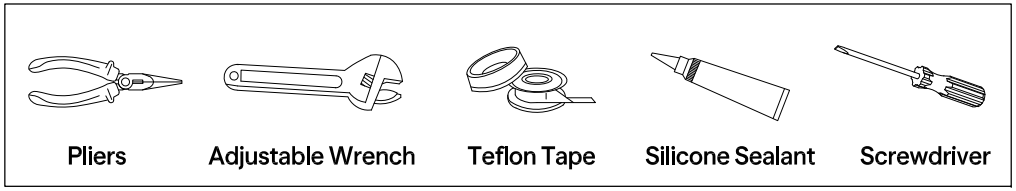

BEFORE BEGINNING INSTALLATION:

1. Have ready (2) 1/2 NPT nipples prior to beginning installation (length to be determined by field conditions).
2. Install 1/2 NPT Nipples protruding from the finished wall 5/8".

1

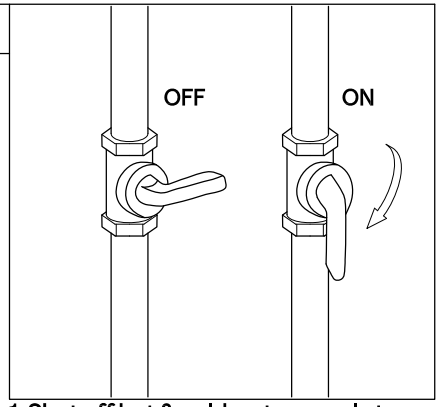

1. Shut off hot & cold water supply to the faucet, plug sink drain with a cloth to avoid losing small parts, remove old faucet.

2

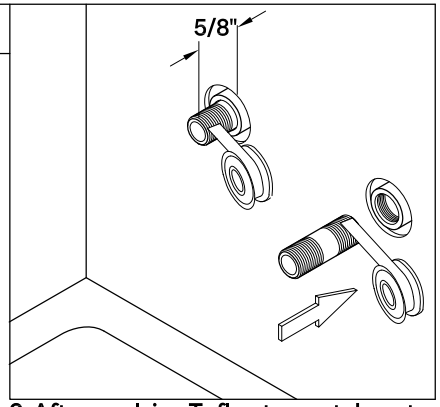

2. After applying Teflon tape, stub-out 1/2" nipples into wall outlets making sure that the nipples protrude from the finished wall 5/8".

3

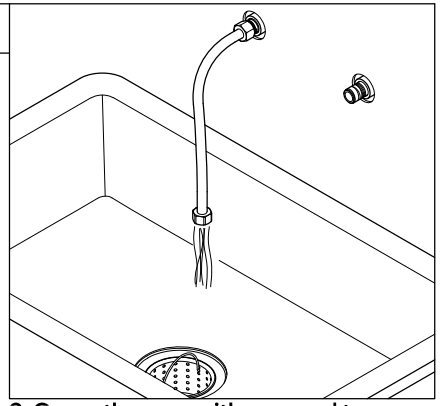

3. Cover the area with rags and turn on the water supplies for 30 seconds or more, this will flush the lines and clear any debris.

4

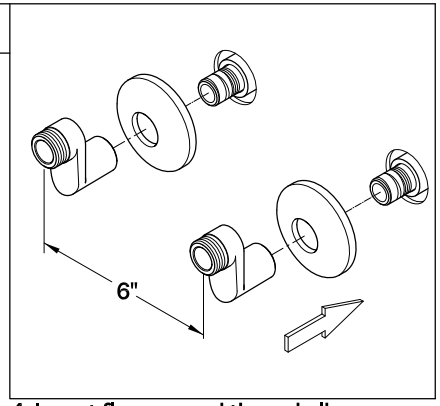

4. Insert flanges and thread elbows onto stub-outs, making sure that the elbow connection to the faucet is set at 6" center to center.

5

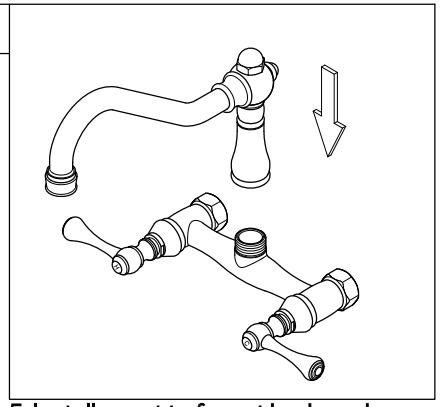

5. Install spout to faucet body and tighten it.

6

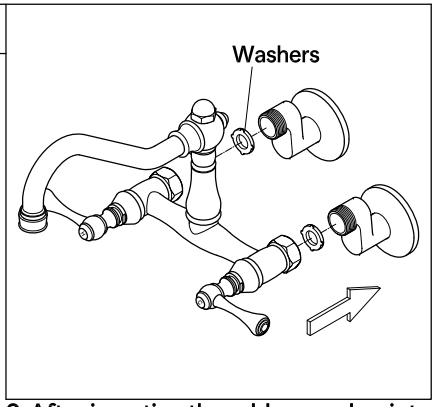

6. After inserting the rubber washer into the faucet inlet nuts, attach the faucet body to the elbows, center the faucet and tighten using adjustable wrenches.

7

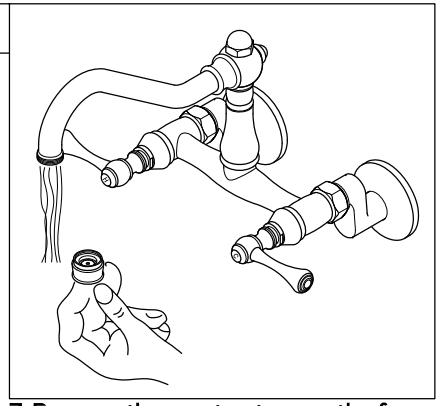

7. Remove the aerator, turn on the faucet, let water run for at least one minute, this will clear any debris left in the line, reinstall aerator.

©2025 LVC Kingston LLC. All Rights Reserved.
2025-05-TA