INDUCTION HARDWARE

Care & Install Guide

Freestanding Ranges



Induction Hardware aims to be the industry leader in electric and induction appliances. Every single Induction Hardware product is electric and focused on bringing a better way to cook. We build every product to last and design them to be easy to maintain. Induction technology is the future of cooking.

APPLIANCE SHOWROOM:

WWW.INDUCTIONHARDWARE.COM
12920 OLD VIRGINIA ROAD, SUITE 160
RENO, NEVADA 89521, USA

CONTACT:
(775) 898-7562
INFO@INDUCTIONHARDWARE.COM


INDUCTION
HARDWARE
THE ELECTRIC APPLIANCE COMPANY

Table of Contents

Quick Start Guide **2**

Range Safety Instructions 3
Parts and Features 5
Cooktop Operation & Burner Sizes 6
Oven Touch Screen Operation 7

Installation Guide **8**

Installation Diagram 9
Wiring Diagram & Dimensions 10
Making Electrical Connection 10
Anti-Tip Bracket 11

Full User Guide **12**

Before First Use 13
Oven Settings 13
Cleaning & Self-Cleaning 19
Warranty 22
Troubleshooting 23

INDUCTION HARDWARE
www.inductionhardware.com

12920 OLD VIRGINIA ROAD, SUITE 160
RENO, NEVADA 89521, USA

Quick Start Guide



Induction is the new electric.

Induction cooking uses electromagnetic fields to directly heat pots and pans, making it faster, more energy-efficient, and more precise than traditional electric ceramic cooktops, which heat by transferring heat from a coil through the glass surface. Unlike ceramic cooktops, induction surfaces stay cooler to the touch and allow for instant temperature control.

Range Safety Instructions

Your safety and the safety of others are very important.
We have provided many important safety messages in this manual and on your appliance. Always read and obey all safety messages.

This is the safety alert symbol. 
This symbol alerts you to potential hazards that can kill or hurt you and others. All safety messages will follow the safety alert symbol and either the word “DANGER,” “WARNING” or “CAUTION.”

These words mean:

If safety instructions are not followed death or serious injury can occur. Below are signs and their meaning.

⚠DANGER A potentially hazardous situation which, if not avoided, could result in death or serious bodily injury.

⚠WARNING A potentially hazardous situation which, if not avoided, may result in moderate or minor injury.

All safety messages will tell you what the potential hazard is, tell you how to reduce the chance of injury, and tell you what can happen if the instructions are not followed.

WARNING:
TO REDUCE THE RISK OF TIPPING OF THE RANGE, THE RANGE MUST BE SECURED BY PROPERLY INSTALLED ANTI-TIP DEVICES. TO CHECK IF THE DEVICES ARE INSTALLED PROPERLY, SLIDE RANGE COMPLETELY FORWARD, LOOK FOR ANTI-TIP BRACKET SECURELY ATTACHED TO THE FLOOR BEHIND THE RANGE AND SLIDE RANGE COMPLETELY BACK UNTIL THE REAR RANGE FOOT IS UNDER ANTI-TIP BRACKET (for more information on the anti-tip bracket and how to install it, please review the installation section later in the manual).

⚠WARNING **NEVER** use this appliance as a space heater to heat or warm the room. Doing so may result in overheating and damage of the oven, as well as not being a safe practice for you or your home.

⚠WARNING **NEVER** cover any slots, holes or passages in the oven bottom or cover an entire rack with materials such as aluminum foil.

⚠CAUTION **DO NOT** store items of interest to children in cabinets above a range or on the back guard of a range – children (and honestly any person) climbing on the range to reach items could be seriously injured as well do serious damage to the appliance. Do not leave children alone especially while the oven is in use. Children should not be left alone or unattended in area where the range is in use. They should never be allowed to sit or stand on any part of the range. Wear proper apparel – loose clothing-should never be worn while using the range.

⚠DANGER Flammable materials should not be stored in an oven or near surface units.
Do not use water on a grease fire; use a fire extinguisher.

Important Safety Instructions

Use Only Dry Potholders –Moist or damp potholders on hot surfaces may result in burns from steam. Do not let potholder touch hot heating elements in the oven. Do not use a towel or other bulky cloth.

DO NOT TOUCH SURFACE UNITS OR AREAS NEAR UNITS during or immediately after use. Surface units may be hot even though they are dark in color right after a pan is removed when cooking is completed. Areas near surface units may become hot enough to cause burns after cooking, due to residual heat within the glass. During and after use, do not touch. The cooktop will display a red “H” signaling there is still residual heat around the surface unit.

Never Leave Surface Units Unattended at High Heat Settings – Boil over causes smoking and greasy spillovers that may ignite.

Cookware - Only certain types of glass, glass/ceramic, ceramic, earthenware, or other glazed utensils are suitable for range-top service without breaking due to the sudden change in temperature. Utensil Handles Should Be Turned Inward and Not Extend Over Adjacent Surface
Units – To reduce the risk of materials, and spillage due to unintentional contact with the utensil, the handle of a utensil should be positioned so that it is turned inward, and does not extend over adjacent surface units. Clean Cooktop With Caution – If a wet sponge or cloth is used to wipe spills on a hot cooking area, be careful to avoid steam burn. Some cleaners can produce noxious fumes if applied to a hot surface.

Proper Installation – The range, when installed, must be electrically grounded in accordance with local codes or, in the absence of local codes, with the National Electrical Code, ANSI/NFPA 70. In Canada, the range must be electrically grounded in accordance with Canadian Electrical Code. Be sure the range is properly installed and grounded by a qualified technician. **ALWAYS** Disconnect the electrical supply before servicing the appliance.
Injuries may result from the misuse of appliance doors or drawers such as stepping, leaning, or sitting on the doors or drawers.

Maintenance – Keep range area clear and free from combustible materials, vapors and liquids. Clean Ventilating Hoods Frequently – Grease should not be allowed to accumulate on hood or filter. When flambe cooking always turn on your vent hood to medium/medium-high and ensure, prior to cooking, the grease traps in the range hood are empty, clean, and free of grease.

State of California Proposition 65 Warnings:
WARNING This product contains bisphenol A(BPA), which is known
to the state of California to cause birth defects, or other reproductive harm, and lead and lead compounds, which are known to the state of California to cause cancer and birth defects or other reproductive harm. For more information, go to : www.P65Warnings.ca.gov

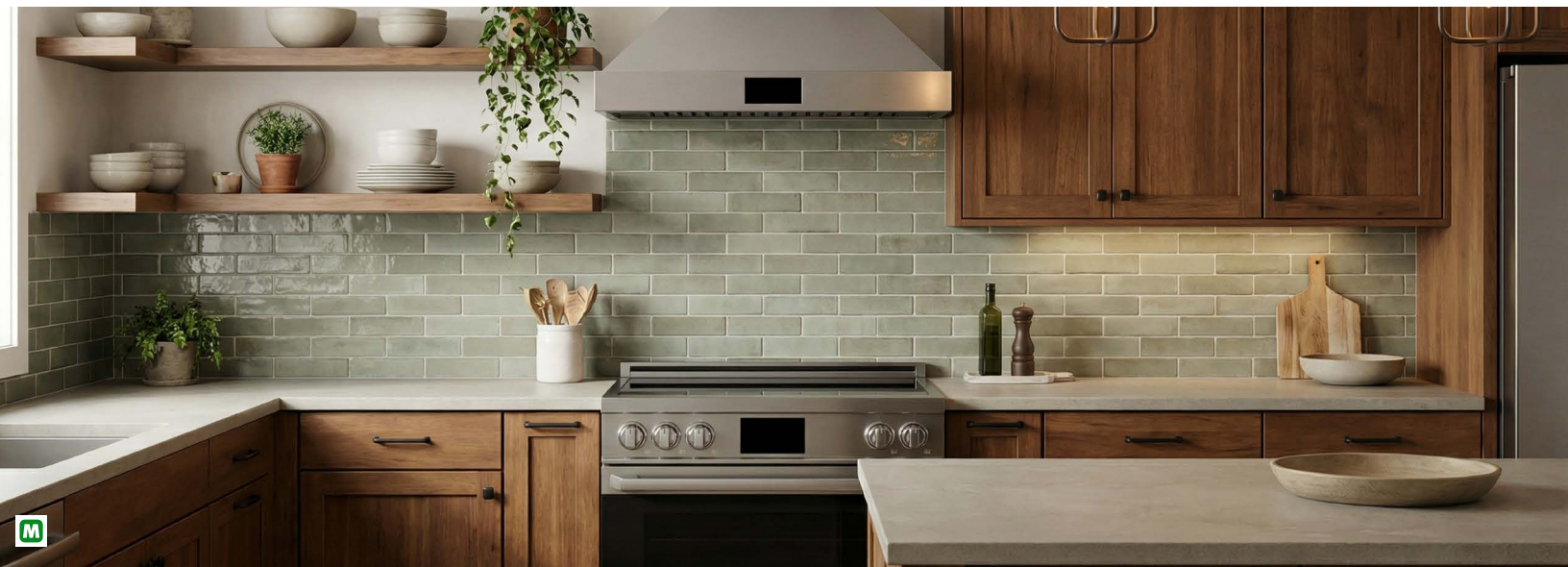

Parts and Features

This manual covers several different models. The range you have purchased may have some or all of the items listed. The locations and appearances of the features shown here may not match those of your model.

Range Parts:
30in Range Shown

1. Induction Cooktop Element
2. Knob
3. Handle
4. Lower panel/kick plate
5. Adjustable feet
6. Oven door
7. Side panels
8. Control panel
9. Indicator
10. Backsplash

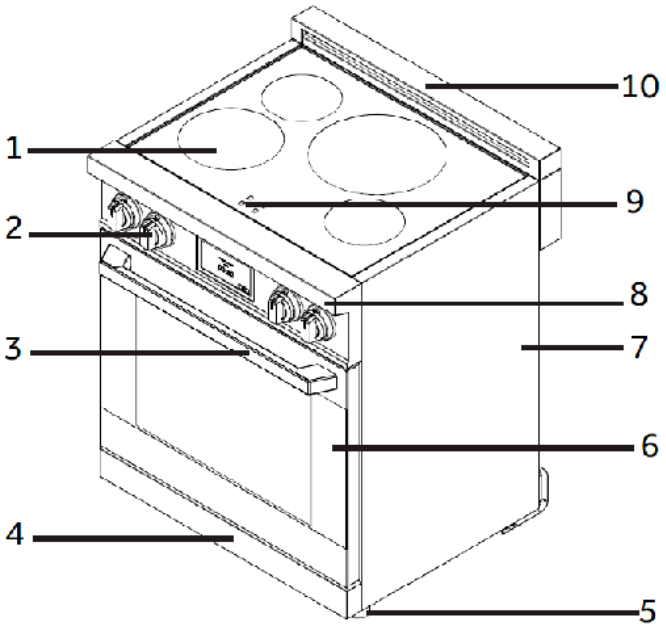

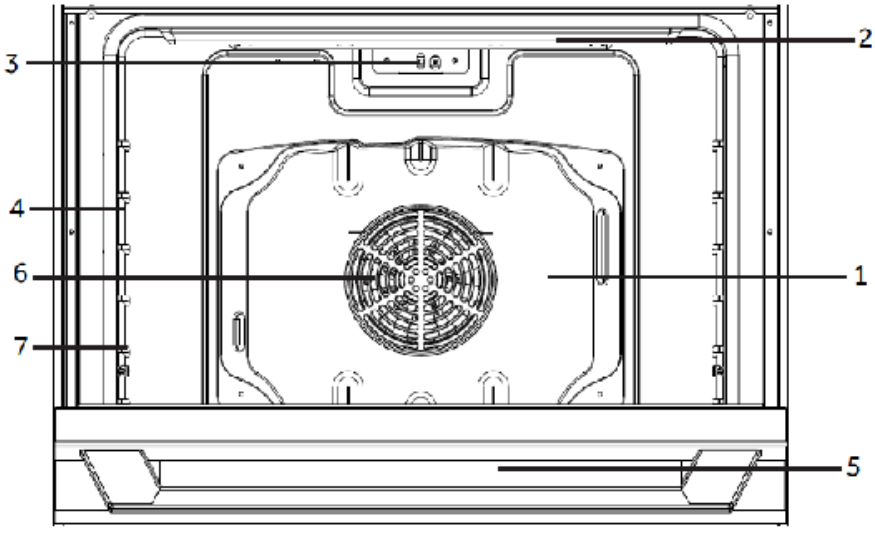

Oven Interior:
30in Range Shown

1. Rear Heating Element (not visible)
2. Top Heating Element
3. Oven Door Latch
4. Oven Rack Shelf
5. Bottom Heating Element (not visible)
6. Convection Fan
7. Oven Light (Location varies by oven size)

Cooktop Use

1. **Begin** by placing an induction suitable pan onto the cooking zone you are going to use. Unsure if a pan is suitable for induction? Place a magnet to the bottom of it. If the magnet sticks to the bottom, then the pan is suitable for induction. If the magnet does not stick, then that pan is not suitable for induction, unfortunately. Pans such as cast iron, carbon steel, and stainless steel work very well.

2. **Turn on the heating zone** with the cooresponding knob on the control panel (turning clockwise). Ensure the cooktop's surface and the bottom of the pan are clean and dry, first.

3. **Adjust the power** level up & down by turning the control knob clockwise/counter-clockwise. The power levels range from 1-9 as well as Boost (P) settings. You can modify the power level at any time.

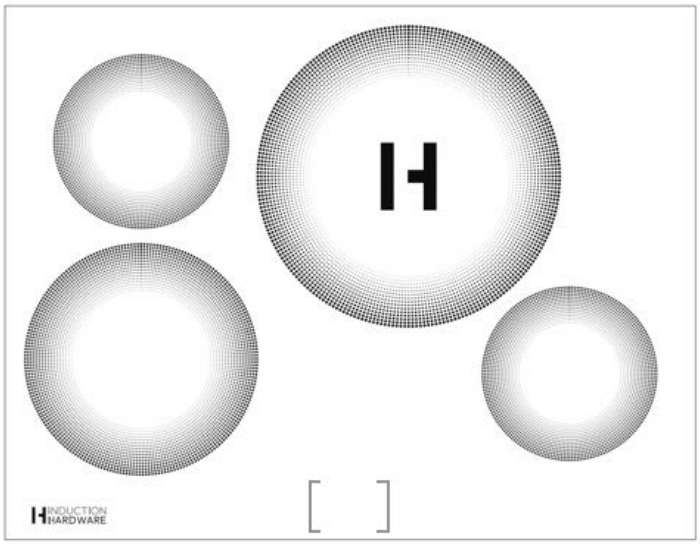

Size	Diameter	Standard	Boost
Small	6.3"	1200W	1500W
Medium	7"	1800W	2100W
Large	10.5"	2300W	3700W

Icons & Symbols: Function - displayed within this diagram on cooktop: [ ]	
u	The burner is activated but not in use.
H	"H" is the cooking zone is too hot to touch. It will disappear when the surface has cooled down to a safe temperature.
P	Boost is activated
L	Child lock is activated
A	Automatic Quick Heating Function is activated
1 2 3 4 5 6 7 8 9	Power Indicator

4. **Child lock function**
When the induction burner is turned on, to activate the child lock function with the control knobs: ensure all knobs are in the OFF position, then simultaneously rotate the first and second knobs on the left to the "A" position and hold for 2 seconds.
Note: For the 48inch range, the child lock for the left two burners is activated by the first and second knobs on the left. For other burners, simultaneously turn the third and fourth knobs on the left to activate the child lock.
Repeating the above operation will deactivate the child lock. When the child lock is activated, the knob controls become ineffective. After any other operation, all digital displays will show "L" for 2 seconds to prompt the user that the child lock is engaged, then resume displaying the induction cooker's original working status.

5. **Auto Rapidheat Function**
The Auto Rapidheat function helps users quickly heat food or liquids, then automatically reduces the heating level to the preset setting. When the knob is turned to the "A" position and held for 0.5 seconds, the burner's digital display will constantly show "A", indicating successful activation. Then, turn the knob to the desired position. During rotation, the corresponding position number should flash. After confirming the position, the number will flash for 5 seconds before the induction cooker starts working. At this time, the display will alternately flash between "A" and the selected position number. To deactivate the function, rotate the knob to position "0" and hold for 5 seconds to automatically turn it off. When the rapid preheat function ends, the burner's digital display will constantly show the set gear number. The Auto Rapidheat function will automatically activate gear 9 for heating.This function only supports activation in gears 1-8. The duration for each gear is shown in the table to the right.

6. **Boost Function**
All burners are equipped with the Boost function, which is activated by rotating the knob to the "P" position. The burner's digital display will show "P" to indicate activation. To exit the Boost function, rotate the knob to "P" again, and it will automatically switch to gear 9. Alternatively, turn the knob to the OFF position to shut it off. Each burner's Boost function is limited to 5 minutes of operation. After 5 minutes, it will automatically reduce to gear 9. A maximum of 3 burners can use the Boost function simultaneously. If the induction cooker is in power limit mode and exceeds the rated power, any burner using Boost will automatically reduce its gear without an error prompt.

Oven Touch Screen Operation

Getting to Settings and Wifi

swipe down





Settings Panel

Press the top middle of the screen and swipe down, similar to a touchscreen display on most tablets and smartphones.

Installation Guide



Installation Made Clear.

Proper installation ensures your Induction Hardware appliance performs exactly as designed. This guide provides the key steps and requirements to help installers complete the process safely and correctly. For additional resources, installation videos, and the most up-to-date documentation, please visit our website.

Installation Diagram

Range Installation Diagram Key:

A 30” on 30” models
36” on 36” models
48” on 48” models
60” on 60” models

B 22” on 30” models
28” on 36” models
40” on 48” models
52” on 60” models

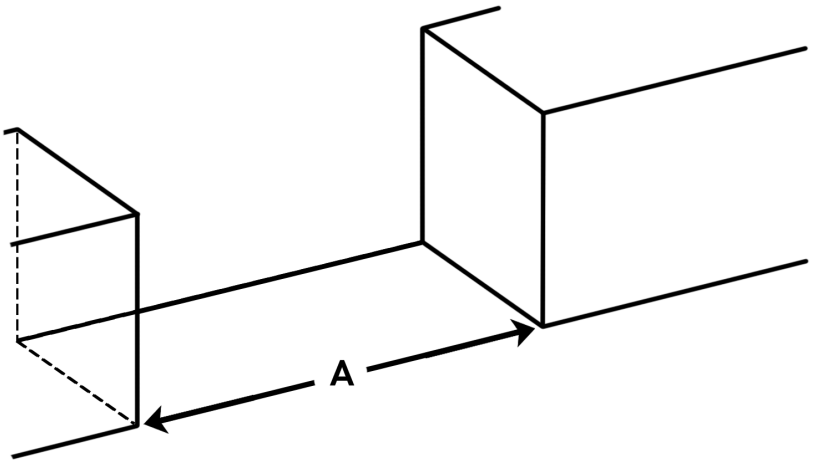

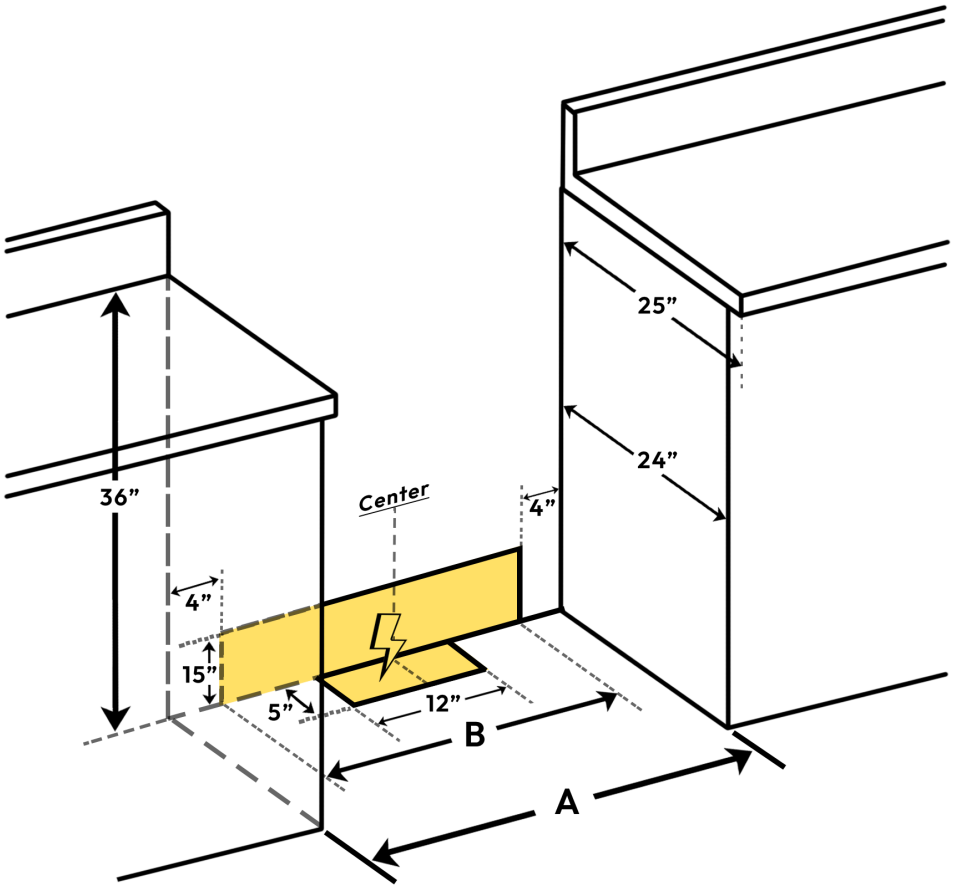

Electrical Installation Area

Wiring Diagram & Dimensions

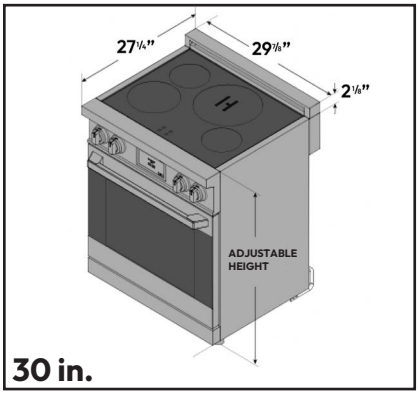

30 in.

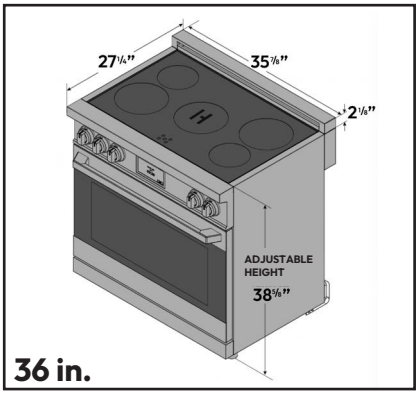

36 in.

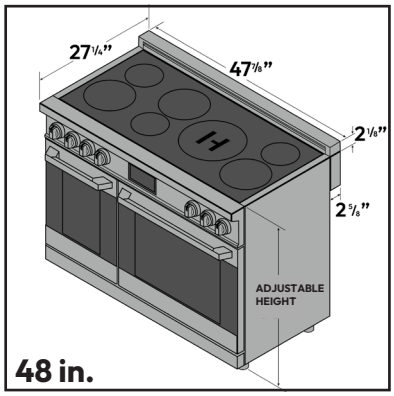

48 in.

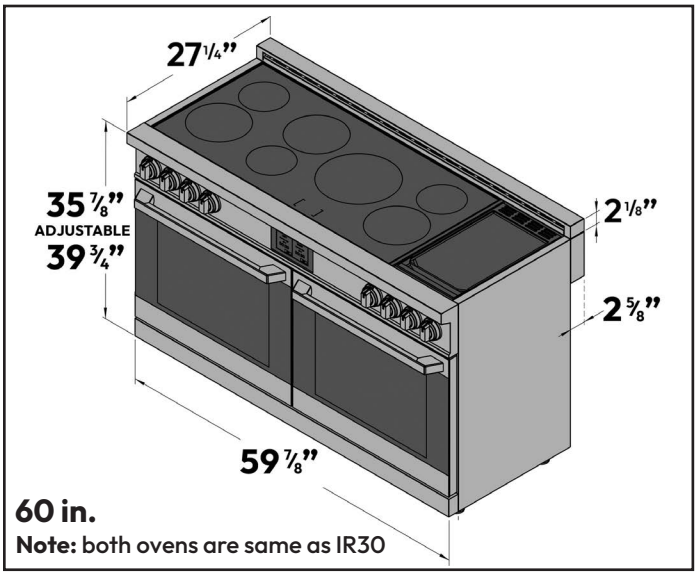

60 in.
Note: both ovens are same as IR30

INTERNAL OVEN DIMENSIONS

	width	height	depth
IR30	24 ½"	17 ¼"	17"
IR36	30 ¼"	17 ¼"	17"
IR48	small oven: 12 ¾" / big oven: 24 ½"	17 ¼"	17"

NOTE: The Induction Hardware range is provided with a NEMA 14-50p plug installed and ready for use.

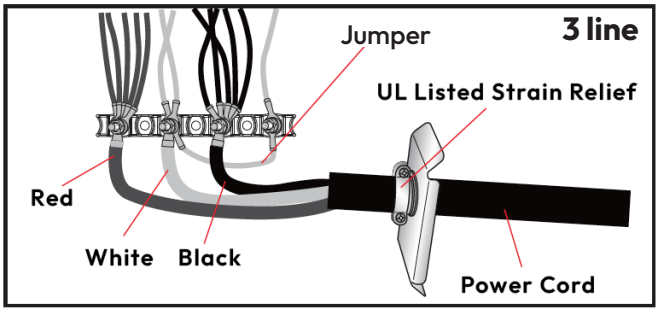

IMPORTANT: Use this method only if local codes permit connecting chassis ground conductor to neutral wire of power supply cord.

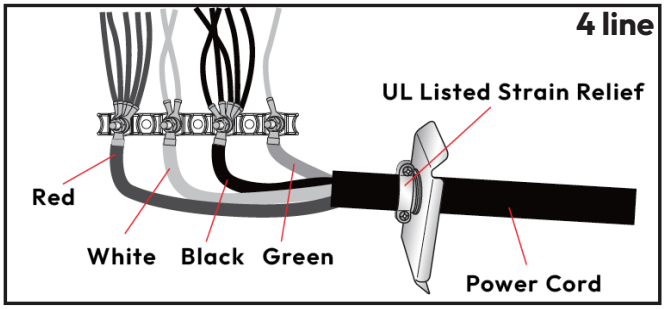

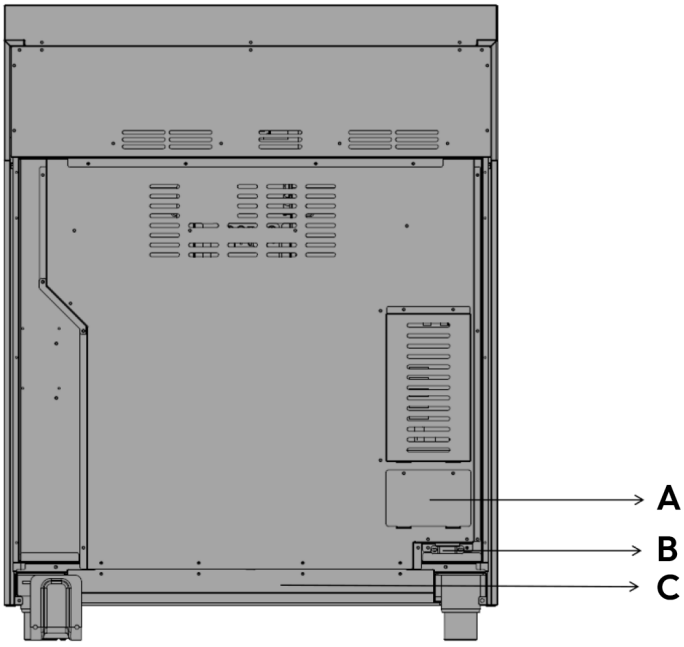

A: Access Panel to Electrical Supply
B: Power Cord Opening
C: Recessed Area

Anti-Tip Bracket

NOTE: An anti-tip bracket kit is provided with the range and required for install.

WARNING: Tip Over Hazard
• A child or adult can tip the range and be killed or seriously injured if not cautious.
• Connect anti-tip bracket to rear range leg.
• Reconnect the anti-tip bracket, if the range is moved.
• Failure to follow these instructions can result in death or serious burns/injuries to children and adults.

IMPORTANT: **DO NOT** completely remove the rear leveling legs. The anti-tip bracket uses either the right-hand or left hand, rear leveling leg to secure the range to the floor.

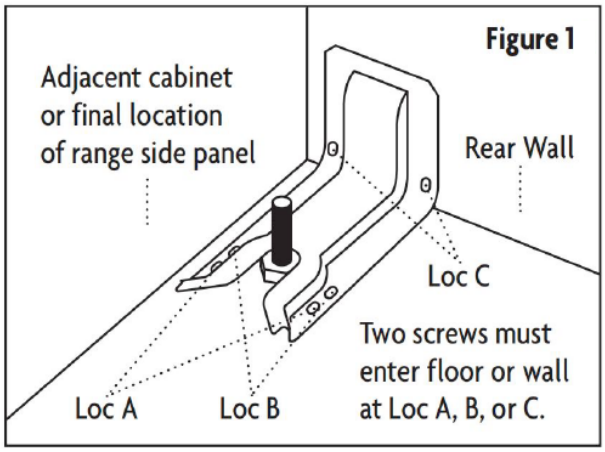

Locate the Bracket
Determine the final location of the range before attempting to install the bracket.
1. Place the bracket on the floor with the back edge against the rear wall. If the range does not reach the rear wall, align the back edge of the bracket with the rear panel of the range in its final location. **NOTE**: If bracket does nota touch the rear wall, you MUST screw bracket to FLOOR.

2. Position the side of the bracket against either the left or right cabinet. If there is no adjacent cabinet, align the edge of the bracket with the side panel of the range in its final location. If the countertop overhangs the cabinet, offset the bracket from the cabinet by the amount of overhang.

3. Mark the location for the pair of holes to be used (see illustration above).
NOTE: For FLOOR installation use either Loc A or B. For REAR WALL installation use Loc C (see figure 1 above).

Secure the Bracket
The bracket must be screwed to either the FLOOR or REAR WALL.

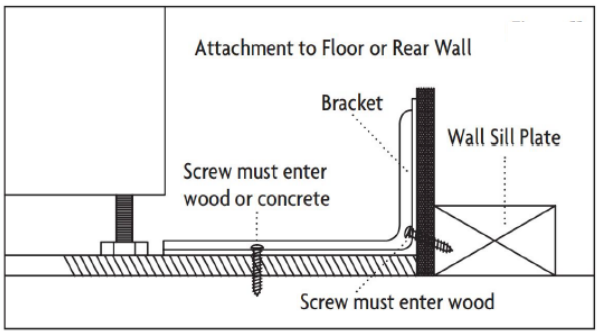

FLOOR Installation:

WOOD FLOOR: Use the screws provided to secure the bracket using the pair of marked holes (either Loc A or B).

CONCRETE FLOOR: Using a concrete bit, drill a 5/32" pilot hole 2" deep into the concrete at the center of each of the marked holes (either Loc A or B). Use the screws provided to secure the bracket into the floor.

REAR WALL Installation: Use the 2 screws provided to secure the bracket using the pair of marked holes at Loc C. The screws MUST enter into a wood sill plate. If the wall contains any metal studs or similar materials, then the floor must be used. After installing the bracket, slide the range into its final location. The rear leveling leg must be fully inserted into the ANTI-TIP bracket as shown in Figure 1. To check if the bracket is installed and engaged properly, look underneath the range to see that the rear leveling leg is engaged in the bracket. If visual inspection is not possible, slide the range forward, confirm the anti-tip bracket is securely attached to the floor or wall, and slide the range back.

Full User Guide



Crafted with confidence.

We design our products to be durable, serviceable, and built for the long run and we stand behind them. Your appliance is covered by the Induction Hardware warranty, reflecting our commitment to craftsmanship and to the people who choose our products. For full warranty details, please visit our website. Thank you for trusting Induction Hardware. If you ever need help, we'll be here.

Before First Use & Oven Settings

This multi-function oven combines the functions of traditional oven modes with the functions of modern, fan-assisted convection modes in a single oven. Use the Cooking Mode control, located on the control panel, to select the oven mode. **IMPORTANT**: During any cycle, the heating elements will turn off when the oven door is opened, and stay off until the door is closed. To maintain oven temperature, limit door openings during cooking.

Before Using Oven for the First Time:
1. Turn on range hood to vent out potential fumes and heat.
2. Close the oven door.
3.Press Bake.
4.Press 500°F (260°C) on the display.
5. Press Start.

NOTE: Allow the oven to operate for 30 minutes with the door closed and no food in the cavity.
5. Turn off the oven, and then open the oven door to allow the oven to cool.

NOTE: Any odor that may be detected during this initial use is due to the evaporation of substances used to protect the oven during storage. After running the oven for 30 minutes at 500 degrees with no additional cookware or food inside, the oven is now ready to serve you well.
IMPORTANT: Do not place anything, including dishes, foil and oven trays, on the bottom of the oven when it is in operation to avoid damaging the enamel.
1. Place bakeware with food on the rack provided with the oven.
2. Close the oven door.
NOTE: The oven cannot be set with the door open.
3. Press the desired oven mode (ie. BAKE).
4. Set the oven to the desired temperature.
5. Press START.
NOTE: The oven racks can be placed in any of the six height positions within the oven and are designed with a 'stop' to keep them from being unintentionally withdrawn fully.

Meat Thermometer

Use a meat thermometer to determine whether meat, poultry and fish are cooked to the desired degree of doneness. The internal temperature, not appearance, should be used to determine doneness. Insert the meat thermometer probe (if provided) into the socket on the left-hand side of the oven liner.

A: Meat Thermometer Probe Socket

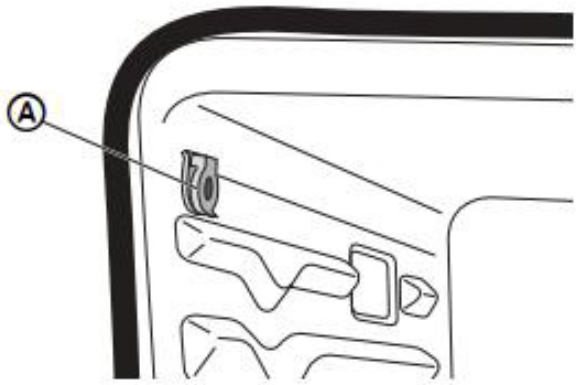

Preheating

When beginning a Bake, Convection Bake or Convection Roast cycle, the oven will begin preheating after Start is pressed. The oven will take approximately 12 to 15 minutes to reach
350°F (177°C) with all of the oven racks provided with your oven inside the oven cavity. Higher temperatures will take longer to preheat. The preheat cycle rapidly increases the oven temperature. The actual oven temperature will go above your set temperature to offset the heat lost when you open the oven door to place the food on the rack. This ensures that cooking will begin at the proper temperature. Do not open the door while the oven is preheating. When the oven has heated to the set temperature, a tone will sound. You can then open the door and place food in the oven.

Oven Settings

Bake:
Baking is cooking with heated air. Both upper and lower elements in the oven are used to heat the air but no fan is used to circulate the heat. Follow the recipe or convenience food directions for baking temperature, time and rack position. Baking time will vary with the temperature of ingredients and the size, shape and finis of the baking utensil.

General Guidelines:
• For best results, bake food on a single rack with at least 1" - 1½" (2.5 - 4 cm) space between bakeware and oven walls.
• Use one rack when selecting the bake mode.
• Check for doneness at the minimum time.
• Use metal bake ware (with or without a non stick finish), heatproof glass, glass ceramic, pottery or other utensils that are suitable for the oven.
• When using heatproof glass, reduce temperature by 25°F (15°C) from recommended temperature.
• Dark metal pans or nonstick coatings will cook faster with more browning. Insulated bake ware will slightly lengthen the cooking time for most foods.
• Do not use aluminum foil or disposable aluminum trays to line any part of the oven. Foil is an excellent heat insulator and heat will be trapped beneath it. This will alter the cooking performance and can damage the finish of the oven.
• Avoid using the opened door as a shelf to place pans.
• See Troubleshooting for tips to Solving Baking Problems.

Baking:
1. Close the oven door.
NOTE: The oven controls cannot be set if the oven door is open.
2. Press BAKE. "BAKE" will appear in the display, and 350°F (177°C) will be displayed.
3. Press START, if you wish to bake at 350°F (177°C) OR Enter the desired temperature by pressing the number keypad, and then press START. The temperature can be set from 170°F (77°C) to 550°F (288°C). **NOTES**: The temperature may be changed at any time during cooking. Press CANCEL to clear the settings. Select oven mode, then enter the desired temperature by pressing the number keypad, and then press START. After selecting an Oven Mode and Temperature, you have the option to set a Cook Time before pressing START.
4. Once START has been pressed, the oven will begin to preheat. When the oven has reached the set temperature, a tone will sound and an elapsed timer will start.
5. Place the food in the oven and close the oven door when preheat is complete.
6. Press CANCEL when finished cooking, and remove food from the oven.

Warming & Proofing:
The Warm-mode keeps hot, cooked foods at serving temperature. The Proof mode prepares dough for baking by activating the yeast. Follow the recipe directions as a guide.

Broil:
Broiling uses direct radiant heat to cook food. The lower the temperature, the slower the cooking. Thicker cuts and unevenly shaped pieces of meat, fish and poultry may cook better at lower broiling temperatures.

Note:
For best results, use a two-piece broiler pan with a grid (not provided). It is designed to drain juices which helps to avoid spatter and smoke. For proper draining, do not cover the grid with foil. The bottom of the pan may be lined with aluminum foil for easier cleaning.Trim excess fat to reduce spattering. Slit the remaining fat on the edges to avoid curling.
Select HI Broil 550°F (288°C) for most broiling. Select LO Broil 450°F (232°C) for low-temperature broiling for foods that take longer to cook, such as poultry, to avoid over browning. Pull out oven rack to stop position before turning or removing food. Use tongs to turn food to avoid the loss of juices. Very thin cuts of fish, poultry or meat may not need to be turned. After broiling, remove the pan from the oven when removing the food. Drippings will bake on the pan if left in the heated oven, making cleaning more difficult. Position food on grid in the broiler pan, then place it in the center of the oven rack. Close the oven door and set the control.

Oven Settings

Broiling:
The temperature can be set from 450°F (232°C) to 550°F (288°C).
1. Place the food in the oven, preheating is not necessary.
2. Close the oven door.
3. Press BROIL. “BROIL” and “550°F” (288°C) will be displayed.
4. Press START, if you wish to broil at 550°F (288°C) OR Enter the desired temperature by pressing the number keypad, and then press START. The temperature can be set from 450°F (232°C) to 550°F (288°C).

NOTES:The temperature can be changed at any time during cooking. Press CANCEL to clear the settings. Select oven mode, then enter the desired temperature by pressing the number keypad, and then press START. After selecting an Oven Mode and Temperature, you have the option to set a Cook Time before pressing START.
5. BROIL will appear in the display after Start is pressed.
6. When cooking is finished, press CANCEL, and then remove food from the oven.

Convection Modes
During convection cooking, the fan provides hot air circulation throughout the oven. The movement of heated air around the food can help to speed up cooking by penetrating the cooler outer surfaces. Food cooks more evenly, browning and crisping outer surfaces while sealing moisture inside. When the oven is set to the Convection function, the ring element, bake and broil elements, and the fan operate to heat the oven cavity. If the oven door is opened during convection cooking or preheating, the fan turns off immediately and the element(s) will turn off after 30 seconds. Once the door is closed, the element(s) will automatically turn on.

Convection Fan
The convection fan operates during any convection mode. When the oven is operating in convection mode, the fan will turn off automatically when the door is opened. The convection fan may run in non-convection modes during the preheat time.

Convection Bake
• Use Convection Bake for single or multiple rack baking. Reduce standard recipe baking temperature by 25°F (15°C).
• For best results, foods should be cooked uncovered, in low-sided pans to take advantage of the forced air circulation. Use shiny aluminum pans for best results unless otherwise specified.
• Heatproof glass or ceramic can be used. Reduce temperature by another 25°F (15°C) when using heatproof glass dishes for a total reduction of 50°F (30°C).
• Dark metal pans may be used. Note that food may brown faster when using dark metal bake ware.
• The number of racks used is determined by the height of the food to be cooked.
• Baked items, for the most part, cook extremely well in convection. Don’t try to convert recipes such as custards, quiches, pumpkin pie, or cheesecakes, which do not benefit from the convection-heating process. Use the regular Bake mode for these foods.
• Multiple rack cooking for oven meals is done on rack positions 1, 2, 3 , 4 and 5. All five positions can be used for cookies, biscuits and appetizers.
- 2 Rack baking: Use positions 1 and 3.
- 3 rack baking: Use positions 2, 3 and 4 or 1, 3 and 5.
• When baking four cake layers at the same time, stagger pans so that one pan is not directly above another. For best results, place cakes on front of upper rack and back of lower rack. Allow 1” - 1½” (2.5 - 4 cm) air space around pans.

Types of Foods Recommended for Convection Bake Mode:
Appetizers, Biscuits, Coffee Cakes, Cookies (2 to 4 racks), Various Types of Yeast Breads, Popovers, Cassroles or Single-Dish Entreés, Air Leavened Foods (Soufflés, Meringue, Meringue-Topped Desserts, Angel Food Cakes, Chiffon Cakes).

Oven Settings

Convection Broil - *General Guidelines*
• Place rack in the required position needed before turning on the oven.
• Use Convection Broil mode with the oven door closed.
• When convection broiling, enter your normal broiling temperature.
• Do not preheat oven.
• Use the 2-piece broil pan.
• Turn meats once halfway through the cooking time. See the Convection Broil chart.
• Thicker cuts and unevenly shaped pieces of meat, fish and poultry may cook better at lower broiling temperatures.

To Set Convection Broil:
1. Place the food in the oven and close the oven door.
2. Press Convection BROIL once. 450°F (232°C) will be displayed.
3. Press START, if you wish to broil at 450°F (232°C) OR Enter the desired temperature by pressing the number keypad, and then press START. The temperature can be set from 170°F (77°C) to 550°F (288°C).

NOTES: To change the set temperature press CANCEL. Press the number keypad to enter the desired temperature, and then press START. After selecting an Oven Mode and Temperature, you have the option to set a Cook Time before pressing START. “Convect Broil” will be displayed, once Start is pressed. Press CANCEL when cooking is finished, and then remove food from the oven.

Convection Roast - *General Guidelines*
When Convection roasting, enter your normal roasting temperature. The roasting time should be 15-30% less than in conventional cooking. It is not necessary to preheat the oven for convection roast.

• Do not preheat for Convection Roast.
• Roast in a low-sided, uncovered pan.
• When roasting whole chickens or turkey, tuck wings behind back and loosely tie legs with kitchen string.
• Use the 2-piece broil pan for roasting uncovered.
• Use the probe or a meat thermometer to determine the internal doneness.
• Double-check the internal temperature of meat or poultry by inserting meat thermometer into another position.
• Large poultry may need to be covered with foil (and pan roasted) during a portion of the roasting time to prevent over-browning.
• The minimum safe temperature for stuffing in poultry is 165°F (75°C)
• After removing the food from the oven, cover loosely with foil for 10 to 15 minutes before carving if necessary to increase the final foodstuff temperature by 5° to 10°F (3°to 6° C).

To Set Convection Roast:
1. Place the food in the oven and close the oven door.
2. Press CONVECTION ROAST once. 325°F (163°C) will be displayed.
3. Press START, if you wish to convection roast at 325°F (163°C) OR Enter the desired temperature by pressing the number keypad, and then press START. The temperature can be set from 170°F (77°C) to 550°F (288°C).

Notes:
• To change the set temperature during cooking, press CANCEL. Press the number keypad to enter the desired temperature, and then press START.
• After selecting an Oven Mode and Temperature, you have the option to set a Cook Time before pressing START.
4. Press START. After pressing START, the oven will display ”CONVECT ROAST” while cooking.
5. Press CANCEL when finished, and then remove food from the oven.

Oven Settings

Air Fry
Air Fry is cooking with heated high speed air. Our ovens include an air fry basket on a telescoping rack. When not air frying, remove the basket to ensure its longevity.
1. To activate the Air Fry mode, touch the Air Fry button on the control panel. The Air Fry icon will illuminate. The default temperature for the Air Fry mode is 420°F (216°C), with a temperature range of 300-450°F (149-232°C). The default cooking time is set to 22 minutes.
2. Press the Start button to initiate the operation. If the actual temperature inside the oven is below 170°F (77°C), the temperature display will show "Lo." Once the actual temperature exceeds 170°F (77°C), the interface will continuously display the current temperature. If the oven has reached the set temperature, the display will remain constant at the set value without further changes.
3. In the preheat mode, the cook time does not count down during the preheating phase. The countdown begins only after the temperature reaches the set value.

Convection Conversion
When using a Convection Recipe, enter your normal cooking temperature and time. The Convection Conversion mode will adjust the temperature and time for perfect cooking results.

Important
• The oven door must be closed before selecting a Convection Conversion oven mode.
• Setting Cook Time is required for a Convection Conversion oven mode.

Baked Goods
1. Press BAKED GOODS among the Convection Conversion controls.
2. Set the oven temperature.
NOTE: The temperature can be set from 170°F (77°C) to 500°F (260°C).
3. Press START. "Conv. Baked" will appear in the display.
4. Press the number keypad to enter the desired cook time. "Press START" will appear in the display.
5. Press START. The oven begins to preheat. Once the set temperature has been reached, a tone will sound.
6. At the end of the set Cook Time the oven will turn off automatically, the end of cycle tone will sound and "End" will appear in the display.

Meats
IMPORTANT: It is not necessary to preheat the oven for the convection conversion MEAT option.
1. Press MEATS among the Convection Conversion controls.
2. Set the oven temperature.
NOTE: The temperature can be set from 170°F (77°C) to 500°F (260°C).
3. Press START. "Conv. Meats" will appear in the display.
4. Press the number keypad to enter the desired cook time. "Press START" will appear in the display.
5. At the end of the set Cook Time the oven will turn off automatically, the end of cycle tone will sound and "End" will appear in the display.

Clean energy. **Clear** results.



The **Future** of Cooking

Cleaning

IMPORTANT: Before cleaning, make sure all controls are turned off, and the oven and cooktop are cool. Always follow label instructions on cleaning products. It is recommended that you first use a little amount of soap, water and a soft cloth or soft sponge unless otherwise noted. Do not use abrasive cleaning products.Always be cautious when using “stainless steel cleaners” as they can sometimes be more abrasive, especially when used on black stainless steel appliances.

Exterior Porcelain Enamel Surfaces
Food spills containing acids, such as vinegar and tomato, should be cleaned as soon as the entire appliance is cool. These spills may affect the finish.

Cleaning Method:
Glass cleaner, mild liquid cleaner or nonabrasive scrubbing pad: Gently clean around the model and serial number plate because scrubbing may remove numbers.

Exterior Stainless Steel
NOTE: Do not use soap-filled scouring pads, abrasive cleaners, cooktop polishing cream, steel-wool pads, Stainless steel clearners that you are not familair with, gritty washcloths or some paper towels. Damage may occur, even with one-time or limited use. When using a new cleaner, clean a spot in a location not easily seen, to test the cleaning materials and how they react with the appliance. **ALWAYS** rub in direction of grain to avoid damaging, and be gentle.

Cleaning Methods
Liquid detergent or all-purpose cleaner: Rinse well with clean water and dry with soft, lint-free cloth. Stainless Steel Cleaner and Polish Vinegar for hard water spots (always test new cleaners to ensure they won’t damage the units finish).

Oven Door Exterior
Glass cleaner and a microfiber cloth, or gentle paper towels: Apply glass cleaner to soft cloth or sponge, not directly on panel.

Ceramic Glass Cooktop
IMPORTANT: To avoid damaging the cooktop, do not use steel wool, abrasive powder cleansers, chlorine bleach, rust remover or ammonia.

Ceramic cooktop cleaning materials:
Cooktop cleaner, cooktop scraper and cooktop cleaning pads are available at most grocery stores.

To Clean the Ceramic Glass Cooktop:
1. Remove food/residue with a cooktop scraper.
For best results, use the cooktop scraper while the cooktop is still warm, but not hot to the touch. It is recommended to wear an oven mitt while scraping the warm cooktop. Hold the cooktop scraper at approximately a 45° angle against the glass surface and scrape the residue. It will be necessary to apply pressure in order to remove the residue. Allow the cooktop to cool down completely before proceeding to Step 2.
2. Apply a few dime-sized drops of cooktop cleaner to the affected areas. Rub cooktop cleaner onto the cooktop surface with a nylon or similar cooktop cleaning pad. Some pressure is needed to remove stubborn stains. Allow the cleaner to dry to a white haze before proceeding to Step 3.
3. Polish with a clean, dry cloth or a clean, dry paper towel.

Smudges From Bottoms of Pans
Cleaning Method
A cloth dampened in a water & vinegar solution.

Cooktop Control Knobs
• Pull knobs straight out from the control panel to remove.
• When replacing knobs, make sure knobs are turned to the Off position.

Cleaning Method
Soap and water or dishwasher:
NOTE: Do not use steel wool, abrasive cleansers or oven cleaner. Do not soak knobs; wipe clean.

Cleaning

Control Panel Cleaning Method:
Glass cleaner and soft cloth or sponge: Apply glass cleaner to soft cloth or sponge, not directly on panel.
NOTE: Do not use abrasive cleaners, steel-wool pads, gritty washcloths or some paper towels. Damage may occur.

Oven Cavity Cleaning Method:
Food spills should be cleaned when oven cools. At high temperatures, foods react with porcelain, so staining, etching, pitting or faint white spots can result.

Cleaning Method:
Mild detergent and warm water. **NOTE:** Do not use oven cleaners as they can be too abrasive sometimes.

Oven Racks Cleaning Method:
Cleaning solution with a sponge can be used only with the oven racks, especially if food has become baked on.
Self Clean Mode Operation Guide
This range is equipped with a self-clean function. To enable the self-clean mode follow the instructions below and continued onto the next page:
IMPORTANT: The Self-Cleaning cycle uses very high temperatures, burning food and grease build up to a powdery ash. The health of some birds is extremely sensitive to the fumes given off during the Self-Cleaning cycle. Exposure to the fumes may result in death to certain birds. Always move birds to another closed and well-ventilated room. Always run your range hood to vent fumes outside during the self-cleaning cycle.
Notes:
• Self-clean the oven before it becomes heavily soiled. Heavy soil results in longer cleaning and more smoke.
• Keep the kitchen well-ventilated during the Self-Cleaning cycle to help get rid of heat, odors, and smoke.
• **Do not** clean, rub, damage or move the oven gasket. The door gasket is essential for a good seal.
• Allow the oven to cool to room temperature before using the Self-Clean feature. If your oven cavity is above 170°F (77°C), the Self-Clean cycle will not activate until it cools down.
• The oven light will not work during the Self-Cleaning cycle. The surface elements can work during the Self-Cleaning cycle.
• When lock icon shows in the display, the oven door cannot be opened. To avoid damage to the door, do not force the door open when lock icon is displayed.

Self Cleaning

Prepare Oven:
Remove the broiler pan, cookware and bakeware and, on some models, the temperature probe from the oven. Remove oven racks to keep them shiny and easy to slide. See “General Cleaning” section for more information. Remove any foil from the oven because it may burn or melt, damaging the oven. Hand clean inside door edge and the 1½” (3.8 cm) area around the inside oven cavity frame, being certain not to move or bend the gasket. This area does not get hot enough during self-cleaning to remove soil. Do not let water, cleaner, etc., enter slots on door frame. Use a damp cloth to clean this area. Wipe out any loose soil to reduce smoke and avoid damage. At high temperatures, foods react with porcelain. Staining, etching, pitting or faint white spots can result. This will not affect cooking performance.

To Self-Clean:
Note: When you press the Self Clean button, a preset time of 3.5 hours will appear which **can be changed** by pressing the button again and then 2 hours will appear and by pressing the button again 3 hours will appear. (Press the button until you get to your desired Self Clean time).

Suggested self cleaning times are:
2 Hours - Light soil build up
3.0 Hours - Average soil build up
3.5 Hours - Heavy soil build up

1. Close the oven door.
2. Press Start after you find your desired Self Clean time.
Note: The oven door will lock. Self Clean, along with the Lock icon will appear on the display screen until the Self Clean cycle is over.

Self Cleaning

Note: If for any reason you need to Cancel the Self Clean cycle, Press and hold the Cancel button for a couple of seconds and the Self Clean cycle will turn off and in a couple more seconds the Lock icon will disappear and you will be able to open your oven door.
CAUTION: If the cycle has been running for a little while it will be HOT!
3. Once the Self Clean cycle ends it will beep and End will appear on your display screen, and to remove it press the cancel button and the time will reappear.
4. The fan will run until the oven has cooled down some but the oven will still be hot to the touch.
5. Once the oven has completely cooled down, then open the oven door and wipe the oven down with a damp cloth.

⚠WARNING

Do not touch the oven during the Self-Cleaning cycle.
Keep children away from oven during Self-Cleaning cycle.
Failure to do so can result in burns.



Warranty

At Induction Hardware, we believe great products should be built to last and supported by people who care. Your appliance is backed by our warranty as part of our commitment to quality, craftsmanship, and long-term reliability.

For full warranty details, please visit our website where we store our warranty information (URL below):

https://inductionhardware.com/pages/warranty-and-service.

Thank you for being part of the Induction Hardware community and if you ever need assistance, our team is always here to help.



Troubleshooting

Oven Door Removal

For normal oven use, there is no need to remove the oven door. However, should it become necessary to remove the door, follow the instructions in this section.



IMPORTANT:

• Make sure oven is cool and power to the oven has been turned off before removing the door.
• The oven door is heavy and fragile, and the door front is glass. To avoid oven door glass
breakage, use both hands, and grasp only the sides of the oven door to remove.
• Be sure that both levers are securely in place before removing the door.
• Do not force door open or closed.

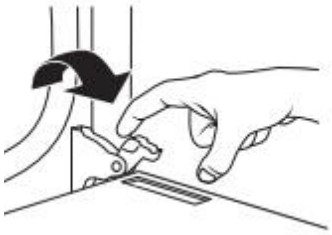

To remove the oven door:
1. Open the oven door completely.
2. Lift up the hinge latch on each side.
3. Close the oven door as far as it will shut.
4. While grasping both outside edges of the oven door, lift up on the door.
5. Continue to push the top of the door closed, while pulling the bottom of the door out of the hinge receivers in the door frame.

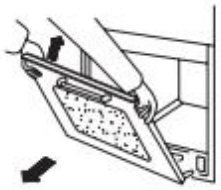

To replace the oven door:
1. Insert both hanger arms into the hinge receivers in the door frame.
2. Slowly open the oven door, and you will feel the door set into place.
3. Move the hinge latches back into the locked position.
4. Check that the door opens and closes freely. If it does not, repeat the door removal and replacement procedures.

⚠WARNING

REPLACING AN OVEN LIGHT
Electrical Shock Hazard



Make sure the oven and lights are cool and power to the oven has been turned off before replacing the halogen light bulb(s). The lenses must be in place when using the oven. The lenses serve to protect the light bulb from breaking. The lenses are made of glass. Handle carefully to avoid breakage. Failure to do so could result in death, electric shock, cuts or burns.

Troubleshooting

Baking and Roasting Problems

With any oven setting poor results can occur for many reasons other than a malfunction of the oven. Check the chart below for causes of the most common problems. Since the size, shape and material of baking utensils directly affect the baking results, the best solution may be to replace old baking utensils that have darkened and warped with age and use.

Food brown unevenly	• Oven not preheated • Aluminum foil on oven rack or oven bottom • Baking cookware too large for recipe • Pans touching each other or oven walls
Food too brown on bottom	• Oven not preheated • Using glass, dull or darkened metal pans • Incorrect rack position • Pans touching each other or oven walls
Food is dry or has shrunk excessively	• Oven temperature too high • Baking time too long • Oven door opened frequently • Pan size too large
Food is baking or roasting too slowly	• Oven temperature too low • Oven not preheated • Oven door opened frequently • Tightly sealed with aluminum foil
Piecrusts do not brown on bottom or crust is soggy	• Baking time not long enough • Using shiny steel pans • Incorrect rack position • Oven temperature is too low
Cakes pale, flat and may not be done inside	• Oven temperature too low • Incorrect baking time • Cake tested too soon • Oven door opened too often
Cakes high in middle with crack on	• Oven temperature too high • Baking time too long • Pans touching each other or oven walls • Incorrect rack position
Piecrust edges too brown	• Oven temperature too high • Edges of crust too thin

Troubleshooting

Oven is not heating	No power to the oven	Replace the fuse or reset the circuit breaker. If the problem continues, call an electrician.
	Oven control not turned on	Make sure the oven temperature has been selected.
	Oven door is not closed	Close the oven door. The heating elements turn off when the door is opened and remain off until the oven door is closed.
Oven is not cooking evenly	Not using the correct bake ware or oven rack position	Refer to cook charts for recommended rack position. Always reduce recipe temperature by 25 °F (15 °C) when baking with Convention Bake mode.
Oven display stays Off.	Power interruption	Turn off power at the main power supply (fuse or breaker box). Turn breaker back on. If condition persists, call for service.
Oven mode and temperature controls cannot be set.	The oven door is open	Close the oven door. The oven mode and temperature controls cannot be set if the oven door is open.
Cooling fan continues to run after oven is turned off	The electronic components have not yet cooled sufficiently	The fan will turn off automatically when the electronic components have cooled sufficiently.
Oven light is not working properly	Light bulb loose or burned-out.	Reinsert or replace the light bulb. Touching the bulb with fingers may cause the bulb to burn out.
Oven light stays on	Door is not closing completely	Check for obstruction in oven door. Check to see if hinge is bent or door switch broken.
Cannot remove lens cover	Soil build-up around the lens cover.	Wipe lens cover area with a clean, dry towel prior to attempting to remove the lens cover.

Troubleshooting

Heating elements and controls do not work.	Fuse is blown or circuit breaker is tripped. No electricity to the cooktop.	Replace the fuse or reset the circuit breaker. If the problem continues, call an electrician. Have electrician check your power supply.
Heating elements do not heat properly.	Improper cookware is being used.	Select proper cookware. See “Cookware.” If the problem continues, call for service.
Using advanced temperature control, our hobs are designed to hold a refined temperature by cycling on and off to ensure consistent heating temperature of the pan.	Heating element temperature controls cycle the elements to maintain the temperature while ensuring life of the elements.	This is a normal operating condition
Glass ceramic surface is see through or appears to be red in color.	Under direct or bright lighting, you will sometimes be able to see through the glass and into the chassis due to its transparent quality. You may also notice a red tint under these conditions.	These are normal properties of black ceramic glass panels.

Troubleshooting – Cooktop Error Codes

E1	Synchronization Loss	1. Power module PCB damaged, replace induction module.
E2	Input Voltage Overvoltage Protection	1. Check if power supply voltage is within normal range. 2. Power module PCB damaged, replace induction module.
E3	Input Voltage Undervoltage Protection	1. Check if power supply voltage is within normal range. 2. Power module PCB damaged, replace induction module.
E4	Pot Sensor Open Circuit	1. Check if coil sensor is properly connected. 2. Replace coil sensor. 3. Module damaged, replace induction module.
E5	Pot Sensor Short Circuit	1. Check if coil sensor is properly connected. 2. Replace coil sensor. 3. Module damaged, replace induction module.
E6	Pot Sensor Overheat	1. Wait for the plate to cool down for automatic recovery. 2. Replace coil sensor. 3. Module damaged, replace induction module.
E7	IGBT Sensor Open Circuit	1. Module damaged, replace induction module.
E8	IGBT Sensor Short Circuit	1. Module damaged, replace induction module.
E9	IGBT Sensor Overheat	1. Wait for components to cool down for automatic recovery. 2. Check if module cooling fan is working properly. 3. Replace induction module.
EE	Communication Fault	1. Check if communication cable is properly connected. 2. Replace communication cable. 3. Control board damaged, replace control board. 4. Module damaged, replace induction module.
Ed	Thermistor Failure	1. Module damaged, replace induction module.

Troubleshooting – Screen Error Messages

Oven temperature sensor open circuit	1. Check whether the connecting wire of the temperature sensor is disconnected. 2. Replace temperature sensor. 3. Replace the power board.
Oven temperature sensor short circuit	1. Check whether the connecting wire of the temperature sensor is disconnected. 2. Replace temperature sensor. 3. Replace the power board.
Probe removed, please reset	1. Check if the meat probe is firmly inserted into the socket or whether the terminals of the socket are loose. 2. Replace the meat probe or power board.
Probe used, please reset	1. Check if the gap between terminals of the meat probe is too small. 2. Check connecting wires to make sure they have good contact. 3. Replace meat probe socket or power board.
The internal tank temperature is too high. Please cool it down first.	1. Wait for the internal temperature of the cavity to cool down naturally or open the oven door for heat dissapation. Check if the normal heating mode operates properly. 2. Replace the temperature sensor. 3. Replace the power board.
Please unlock the door lock first.	1. Check if the door lock is in the unlocked position. 2. Check if the microswitch and its connecting wires are conducting properly. 3. Check if the door lock motor is operating normally. 4. Check if the thermal protector of the door lock motor is conducting properly. 5. Check wire connections of the microswitch, door lock motor and PCB board.
Paused, close the door to resume or press stop to end.	1. Check whether the oven door is closed properly. 2. Check if the microswitch is depressed correctly. 3. Check if the microswitch is conducting properly. 4. check the connecting wire between the door microswitch and PCB board. 5. Replace the door microswitch and its wire or replace the power board.
Please close the oven door first.	1. Check if the oven door is closed properly. 2. Check if the door microswitch is depressed correctly. 3. Check if the door microswitch is conducting properly. 4. Check the connection between the microswitch and PCB board. 5. Replace the door microswitch or replace the power board.
Communication Failure	1. Check if the version number of the display board matches the product. 2. Check if the communication cable betwen the display board and the PCB board is intact. 3. Replace the communication cable. 4. Replace the display board. 5. Replace the power board.
The current mode does not support the meat probe, please remove the meat probe	1. Pull out the meat probe, then retry this mode again.
Screen stuck on “Welcome”	1. Check that the touch flat cable of the display screen is properly connected. 2. Replace the screen assembly.
Screen stuck on “IH” intro	1. Replace the display board.
Unfortunately, the process com.android.phone has stopped.	1. Replace the display board.





Thank you for being part of the Induction Hardware community.

If you ever need support, our team is always here to help.

www.INDUCTIONHARDWARE.com