P-Trap Installation:

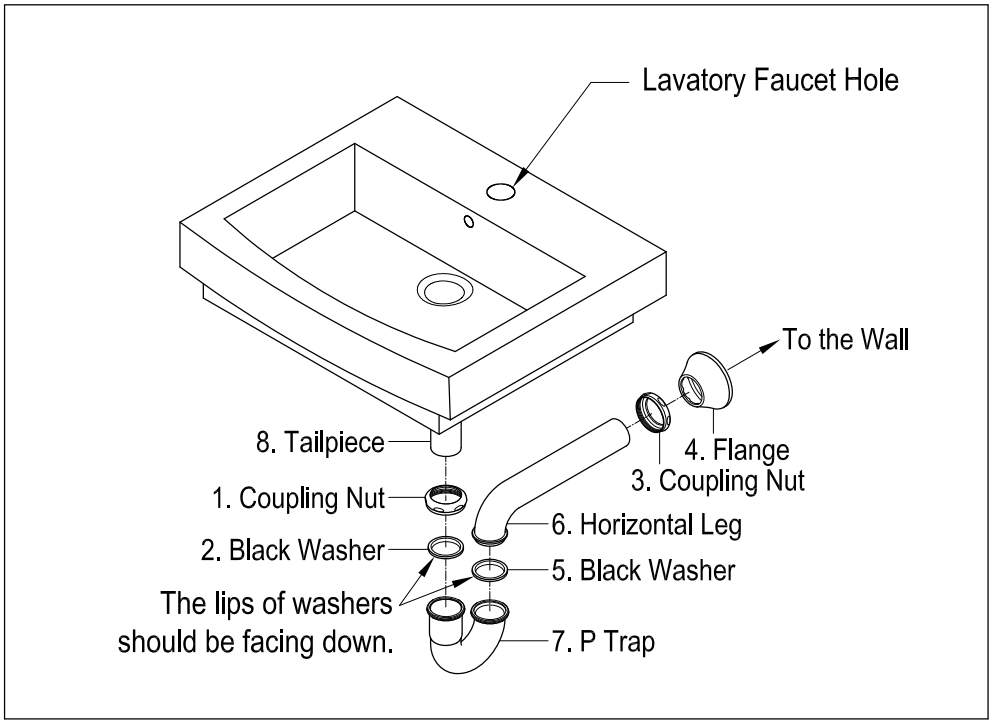

1. Insert horizontal leg (6) into wall drain stub-out.
2. Remove coupling nut (1) and black washer (2) from the P-trap (7) .
3. Insert coupling nut (1) and black washer (2) onto the tailpiece (8), make sure the lip of washer is facing down.
4. Attach P-trap to the tailpiece (8). Slowly and carefully move the black washer (2) down to touch the inlet of P-trap (7) by hand. Then tighten up the coupling nut (1).
5. Align P-trap (7) with horizontal leg (6) and tailpiece (8), at this point it may be necessary to cut part of tailpiece (8) or part of horizontal leg (6) to obtain proper alignment.
6. Check if all components are properly tightened.
7. Run water. If leaks appears and tightening doesn't correct it, loosen coupling nuts (1) or (3), check black washers (2) and (5) are properly installed. Retighten coupling nuts (1) or (3).

FAUCETURE

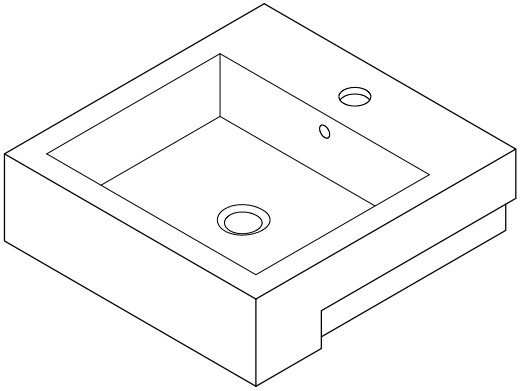

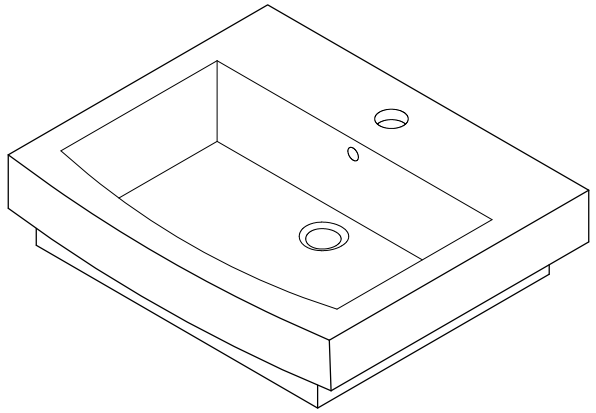

⚠CAUTION

Failure to follow all installation directions may cause product to detach from the wall and cause serious injury

NOTICE

Failure to follow all directions may cause leaks which may result in water damage

www.kingstonbrass.com
TOLL-FREE CUSTOMER SERVICE: 1-877-2-KBRASS
TECHNICAL SUPPORT E-mail: service@kingstonbrass.com
12775 Reservoir Street, Chino, CA 91710



⚠WARNING

Lifting hazard.

Single person lift could cause injury.
Use assistance when moving or lifting.

FAUCETURE
INSTALLATION INSTRUCTIONS
Console Sink Legs

Before Installation :

1. Before beginning the installation of your console pedestal basin, it is important to identify the type of wall where the pedestal will be installed and prepare the installation location accordingly.
2. Install an anchoring brace in the wall prior to installing the drywall, this can be a 2" x 6" piece of wood that will fit between the two studs, then install drywall and finish as usual. Due to the excessive weight of this pedestal it should not be mounted on drywall unless it is properly secured to the anchoring brace.
3. For safety concern, make sure your sink has proper wall mounting parts or brackets to fix the sink on wall.
4. For maximum weight capacity, we recommend that you can use our bracket # VSPLBRKT as shown in the last page.

Installation Step :

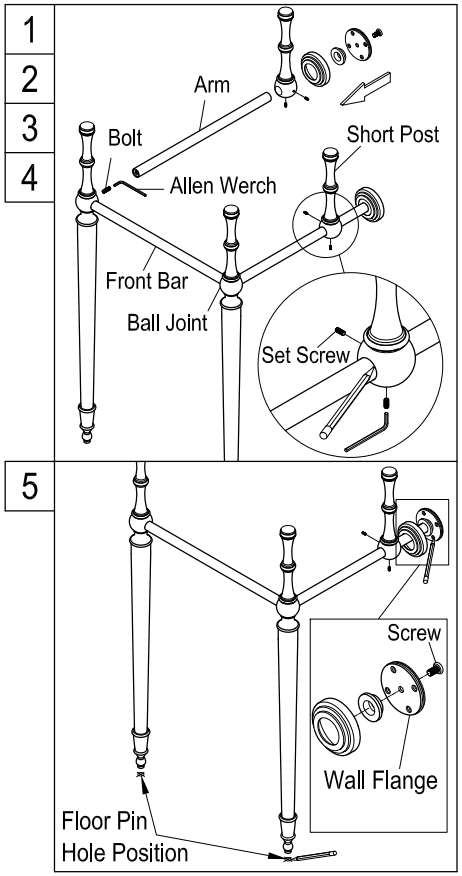

1. Join the two vertical leg supports by inserting the front bar and securing the front bar by tightening the bolts with Allen wrench, then assemble the left and right arms onto the vertical leg supports with the bolts, make sure the two arms go inside to the ball joints completely.
2. Insert the two short post into the arms, properly adjust its position as required for your basin then mark its position with a pencil.
3. Secure the wall flanges onto the two arms as shown on drawings.
4. Place the leg support assembly at the location where the console basin will be installed. Adjust to make sure the vertical legs and short posts are plumb and horizontal arms are level.
5. Install the wall flange parts with the socket head screws as shown on drawing. Use pencil to mark the locations of drill holes for wall support flanges and floor pins.

Need Tools:

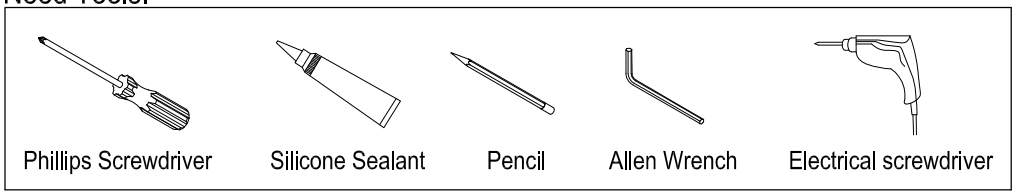

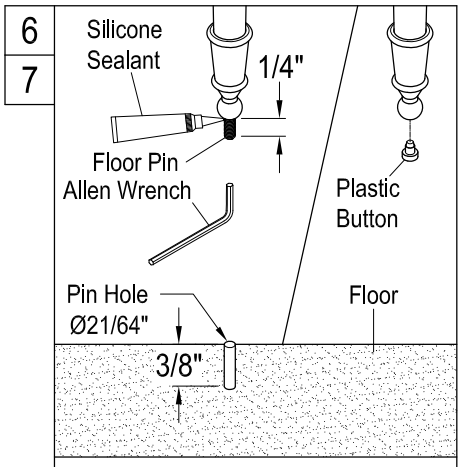

6. Remove the leg support assembly and drill the holes on floor to fit the floor pins. As an option, if you don't want to install the floor pins just insert the plastic buttons under the legs. Then the pin hole drilling is not needed.
7. Apply silicone sealant on one threaded end of the floor pin, secure it into the bottom of vertical legs with an Allen wrench. Make sure the floor pin protrude 1/4" from the bottom surface.

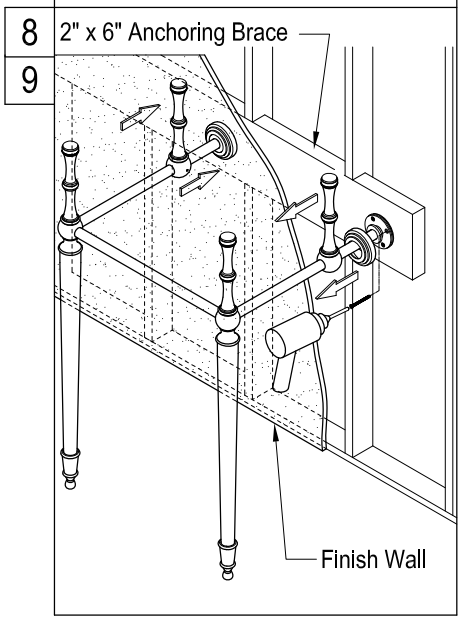

8. Move and adjust the position of the leg support assembly, so the two floor pins can completely go into the drilled holes on the floor. Loosen set screws on the short posts, then move the short posts and flange covers forward. Secure the leg support assembly to the wall by tightening all the wood screws on the wall flanges of the arms.
9. Move back the short posts and the flange covers to its original position, then adjust to be plumb and tighten up the set screws.

©2023-09-D Kingston Brass

FAUCETURE

INSTALLATION INSTRUCTIONS
Semi-Recessed Sink

Need Tools:

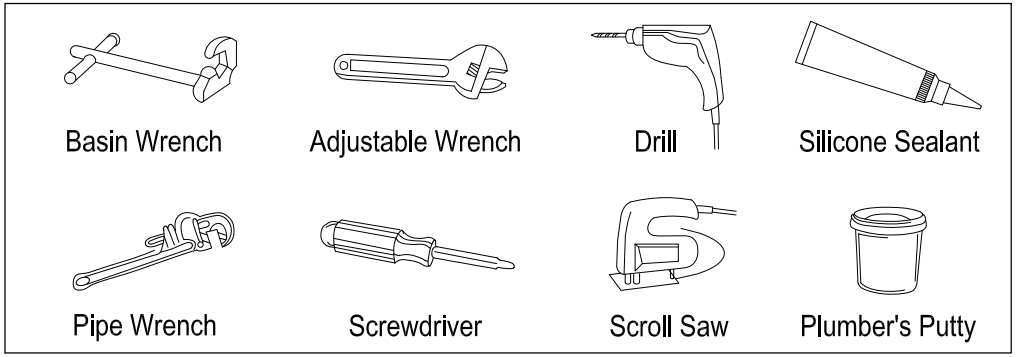

Before Installation :

1. Prior the installation, unpack your new Kingston Brass product and inspect it keep the product in its original package until you are ready to install it.
2. Shut the water supply off when replacing an existing fixture. Preparation of the floors and walls, including all additional wall supports, maybe required.
3. Observe all local plumbing and building codes.
4. Do not install this fixture alone.
5. Make sure to select appropriate drain as some of Kingston Brass vessel sinks do not include overflow hole.

Installation Step :

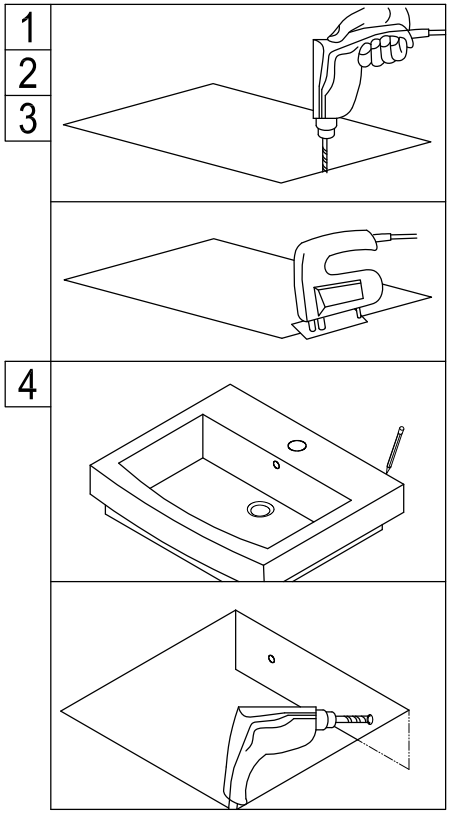

1. Place basin/sink on top of counter where it will be installed.
2. Mark the location of drain opening.
3. Use the installation template to make a cut out on the counter. (If sink does not require a template to cut the counter, sit the basin above the counter)
4. Mark hole position by measuring the distance from counter height to center of mounting hole and center to center between two back mounting hole.

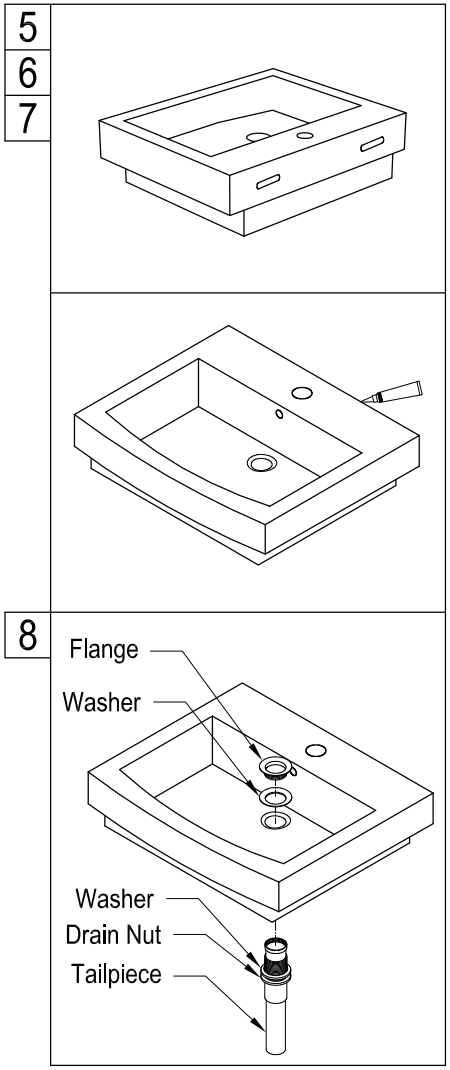

5. Turn basin/sink over; apply a very thin bead of clear caulking around the base of basin/sink.
6. Drill two holes, insert the appropriate anchors for your wall type. This basin/sink includes toggle bolt anchors for drywall installation, if your wall is not a drywall type; please consult a professional to specify the appropriate anchors.
7. Turn right side up and place basin/sink on counter, center basin/sink on cut out, insert and tighten the bolts on the anchors. Clean all excess caulking.
8. Insert the drain as show in picture, tighten the drain nut from underneath of the counter and making sure not to over tighten as this may cause cracks in your basin/sink.

© 2023-09-D Kingston Brass

KINGSTON
KITCHEN & BATH

Toggle Bolt Anchor Installation Instructions:

1. If you are installing on a plaster (Drywall) wall we recommend using toggle bolt anchors (included), drill a 5/8” hole at the marked location of the holes
2. Remove toggle from bolt, insert washer on the bolt and insert bolt through the basin mounting holes.
3. Thread no more than 1/2", with the tip of the toggle pointing towards the head of the bolt, apply a bead of silicone caulking around the perimeter of the back of the sink and secure the sink to the wall by inserting the toggle bolt through the holes.
4. Make sure that the bolt went far enough to allow the toggle bolt to open, thread the bolt while pulling on it, this will ensure that the toggle inside the wall will not spin, thread until the basin has been properly secured.

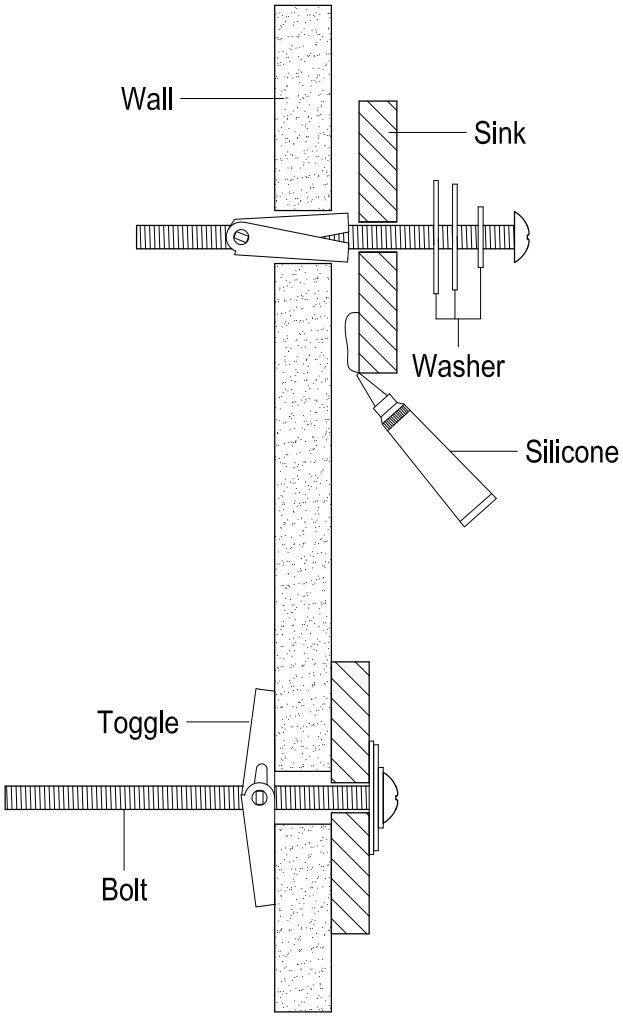

⚠CAUTION

Failure to follow all installation directions may cause product to detach from the wall and cause serious injury

www.kingstonbrass.com
TOLL-FREE CUSTOMER SERVICE: 1-877-2-KBRASS
TECHNICAL SUPPORT E-mail: service@kingstonbrass.com
12775 Reservoir Street, Chino, CA 91710

©2022-10-E Kingston Brass

FAUCETURE

INSTALLATION INSTRUCTIONS

L Shape Mounting Bracket

Need Tools:

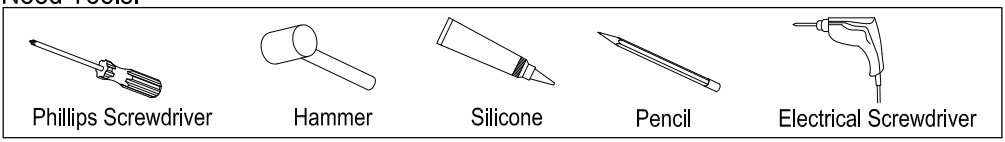

Installation:

1. Once unit has been assembled place at the desired location.
2. Gently place basin on top of pedestal legs and very carefully place in the location where the pedestal legs will be installed and after leveling draw a line across the bottom of the basin.
3. Remove the basin, find the location of the wood studs and using the marked line as a guide to install support brackets at the location of the studs, make sure at least one of the screws is secured to the wood studs.
4. Use the appropriate anchors on places where the bracket is not secured to wood.
5. Fix the bracket onto the wall by tightening up wood screws with a screwdriver.
6. Place basin on top of pedestal legs, apply a bead of silicon around the back perimeter of the basin.

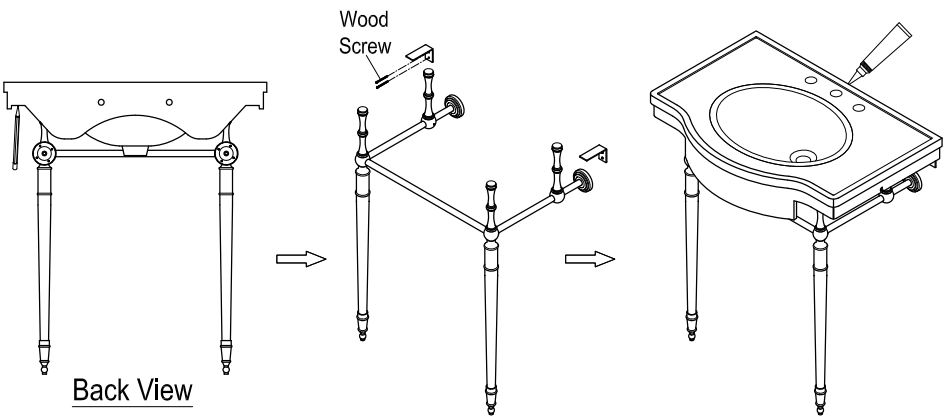

CAUTION

Failure to follow all installation directions may cause product to detach from the wall and cause serious injury

www.kingstonbrass.com
TOLL-FREE CUSTOMER SERVICE: 1-877-2-KBRASS
TECHNICAL SUPPORT E-mail: service@kingstonbrass.com
12775 Reservoir Street, Chino, CA 91710

© 2022-12-D Kingston Brass