HONDA

Power

Equipment

Owner's Manual

EB5000X

Click here to save this manual to your computer.

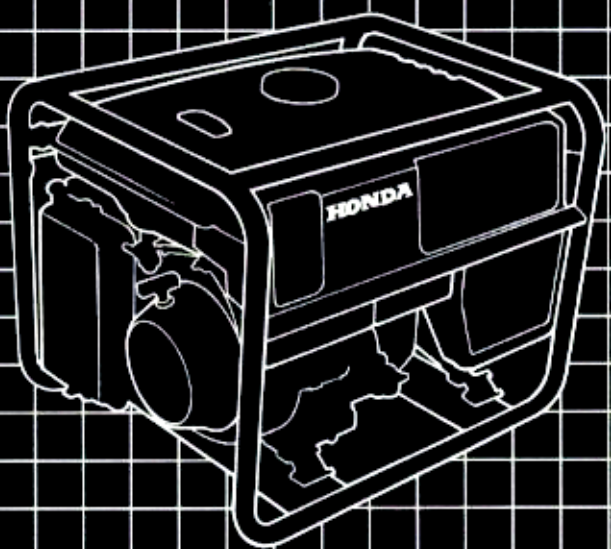

© HONDA MOTOR CO., LTD. 2000

⚠ WARNING: ⚠

The engine exhaust from this product contains chemicals known to the State of California to cause cancer, birth defects or other reproductive harm.

⚠WARNING

The generator is a potential source of electrical shock if misused. Do not expose the generator to moisture, rain or snow. Do not let the generator get wet, and do not operate it with wet hands.

Keep this owner's manual handy, so you can refer to it at any time. This owner's manual is considered a permanent part of the generator and should remain with the generator if resold.

The information and specifications included in this publication were in effect at the time of approval for printing. Honda Motor Co., Ltd. reserves the right, however, to discontinue or change specifications or design at any time without notice and without incurring any obligation whatever. No part of this publication may be reproduced without written permission.

Congratulations on your selection of a Honda generator. We are certain you will be pleased with your purchase of one of the finest generators on the market.

We want to help you get the best results from your new generator and to operate it safely. This manual contains the information on how to do that; please read it carefully.

As you read this manual, you will find information preceded by a NOTICE symbol. That information is intended to help you avoid damage to your generator, other property, or the environment.

We suggest you read the warranty policy to fully understand its coverage and your responsibilities of ownership. The warranty policy is a separate document that should have been given to you by your dealer.

When your generator needs scheduled maintenance, keep in mind that your Honda servicing dealer is specially trained in servicing Honda generators. Your authorized Honda servicing dealer is dedicated to your satisfaction and will be pleased to answer your questions and concerns.

Best Wishes,
Honda Motor Co., Ltd.

A FEW WORDS ABOUT SAFETY

Your safety and the safety of others are very important. And using this generator safely is an important responsibility.

To help you make informed decisions about safety, we have provided operating procedures and other information on labels and in this manual. This information alerts you to potential hazards that could hurt you or others.

Of course, it is not practical or possible to warn you about all the hazards associated with operating or maintaining a generator. You must use your own good judgment.

You will find important safety information in a variety of forms, including:

- **Safety Labels** – on the generator.
- **Safety Messages** – preceded by a safety alert symbol ⚠ and one of three signal words, DANGER, WARNING, or CAUTION.

  These signal words mean:

⚠ DANGER You WILL be KILLED or SERIOUSLY HURT if you don't follow instructions.

⚠ WARNING You CAN be KILLED or SERIOUSLY HURT if you don't follow instructions.

⚠ CAUTION You CAN be HURT if you don't follow instructions.

- **Safety Headings** – such as *IMPORTANT SAFETY INFORMATION.*
- **Safety Section** – such as *GENERATOR SAFETY.*
- **Instructions** – how to use this generator correctly and safely.

This entire book is filled with important safety information – please read it carefully.

CONTENTS

SAFETY 5
Safety Label Locations 5
Safety Information 7
COMPONENT IDENTIFICATION 9
CONTROLS 11
Engine Switch 11
Recoil Starter 11
Fuel Valve Lever 12
Choke Rod 12
Voltage Selector Switch (Dual Voltage System) 13
Ground Terminal 13
Oil Alert® System 14
Auto-throttle System 14
Circuit Breaker 15
Circuit Protector 16
Ground Fault Circuit Interrupter (GFCI) 17
GENERATOR USE 21
Connections to a Building's Electrical System 21
Ground System 21
Special Requirements 21
AC Applications 22
AC Operation 23
AC Receptacle Selection 24
Auto-throttle System 25
High Altitude Operation 26
PRE-OPERATION CHECK 27
Engine Oil 27
Fuel 28
STARTING THE ENGINE/STOPPING THE ENGINE 30
MAINTENANCE 31
The Importance of Maintenance 31
Maintenance Safety 32
Emission Control System Information 33
Air Index 36
Maintenance Schedule 37
Engine Oil Change 38
Air Cleaner Service 39
Fuel Sediment Cup Cleaning 40
Spark Plug Service 41
Spark Arrester Maintenance 42

TRANSPORTING/STORAGE 43
TROUBLESHOOTING 45
WIRING DIAGRAM 47
SPECIFICATIONS 48
INSTALLATION OF OPTIONAL PARTS 49
WARRANTY SERVICE INFORMATION 52
INDEX 53

SAFETY LABEL LOCATION

These labels warn you of potential hazards that can cause serious injury. Read them carefully.

If a label comes off or becomes hard to read, contact your Honda generator dealer for a replacement.

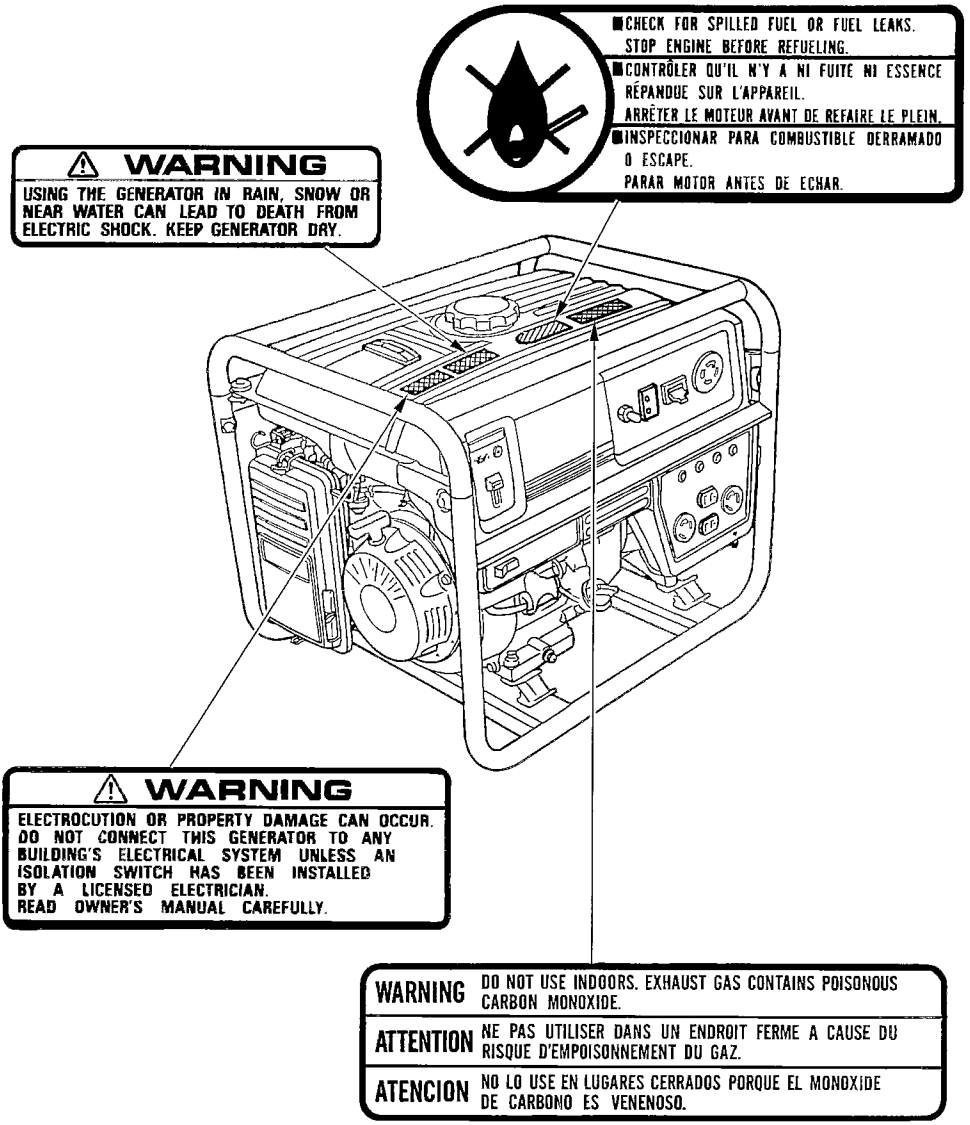

⚠ WARNING

You risk electric shock if you operate this generator with a faulty GFCI (ground-fault circuit-interrupter).

Test GFCI before each use.

If GFCI fails test, do not use your generator. See your Honda dealer.

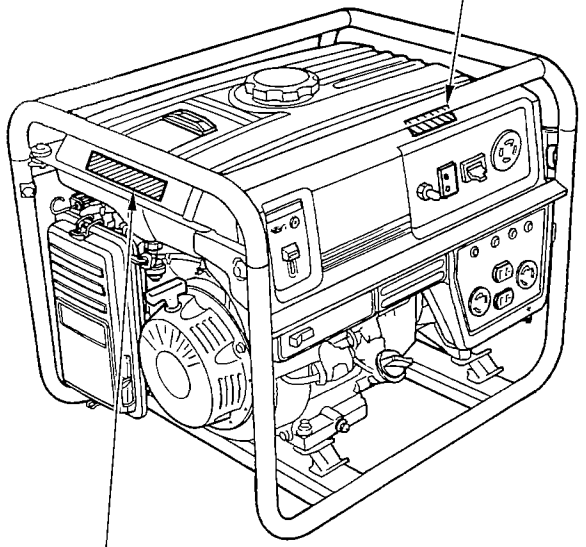

EB5000X HONDA MOTOR CO., LTD. MADE IN JAPAN Ⓐ

CAUTION	AC	
■ BE SURE TO FILL CRANKCASE WITH RECOMMENDED OIL BEFORE USING. FOR DETAILED EXPLANATION, SEE THE OWNER'S MANUAL.	VOLTAGE	120/240V
	FREQUENCY	60Hz
	RATED OUTPUT	4.5kVA
	MAX. OUTPUT	5.0kVA
	PHASE	1φ
	FUEL GASOLINE (PETROL)	

SAFETY INFORMATION

Honda generators are designed to give safe and dependable service if operated according to instructions. Read and understand this owner's manual before operating your generator. You can help prevent accidents by being familiar with your generator's controls, and by observing safe operating procedures.

Operator Responsibility

- Know how to stop the generator quickly in case of emergency.
- Understand the use of all generator controls, output receptacles, and connections.
- Be sure that anyone who operates the generator receives proper instruction. Do not let children operate the generator without parental supervision.

Carbon Monoxide Hazards

- Exhaust contains poisonous carbon monoxide, a colorless and odorless gas. Breathing exhaust can cause loss of consciousness and may lead to death.
- If you run the generator in an area that is confined, or even partially enclosed, the air you breathe could contain a dangerous amount of exhaust gas. To keep exhaust gas from accumulating, provide adequate ventilation.

Electric Shock Hazards

- The generator produces enough electric power to cause a serious shock or electrocution if misused.

- Using a generator or electrical appliance in wet conditions, such as rain or snow, or near a pool or sprinkler system, or when your hands are wet, could result in electrocution. Keep the generator dry.

- If the generator is stored outdoors, unprotected from the weather, check the Ground-Fault Circuit Interrupter (GFCI), and all other electrical components on the control panel, before each use. Moisture or ice can cause a malfunction or short circuit in electrical components which could result in electrocution.

- Do not connect to a building electrical system unless an isolation switch has been installed by a qualified electrician.

- Do not connect to swimming pool equipment installed before adoption of the 1965 national electric code.

Fire and Burn Hazards

- The exhaust system gets hot enough to ignite some materials.
  - Keep the generator at least 3 feet (1 meter) away from buildings and other equipment during operation.
  - Do not enclose the generator in any structure.
  - Keep flammable materials away from the generator.

- The muffler becomes very hot during operation and remains hot for a while after stopping the engine. Be careful not to touch the muffler while it is hot. Let the engine cool before storing the generator indoors.

- Gasoline is extremely flammable and is explosive under certain conditions. Do not smoke or allow flames or sparks where the generator is refueled or where gasoline is stored. Refuel in a well-ventilated area with the engine stopped.

- Fuel vapors are extremely flammable and may ignite after the engine has started. Make sure that any spilled fuel has been wiped up before starting the generator.

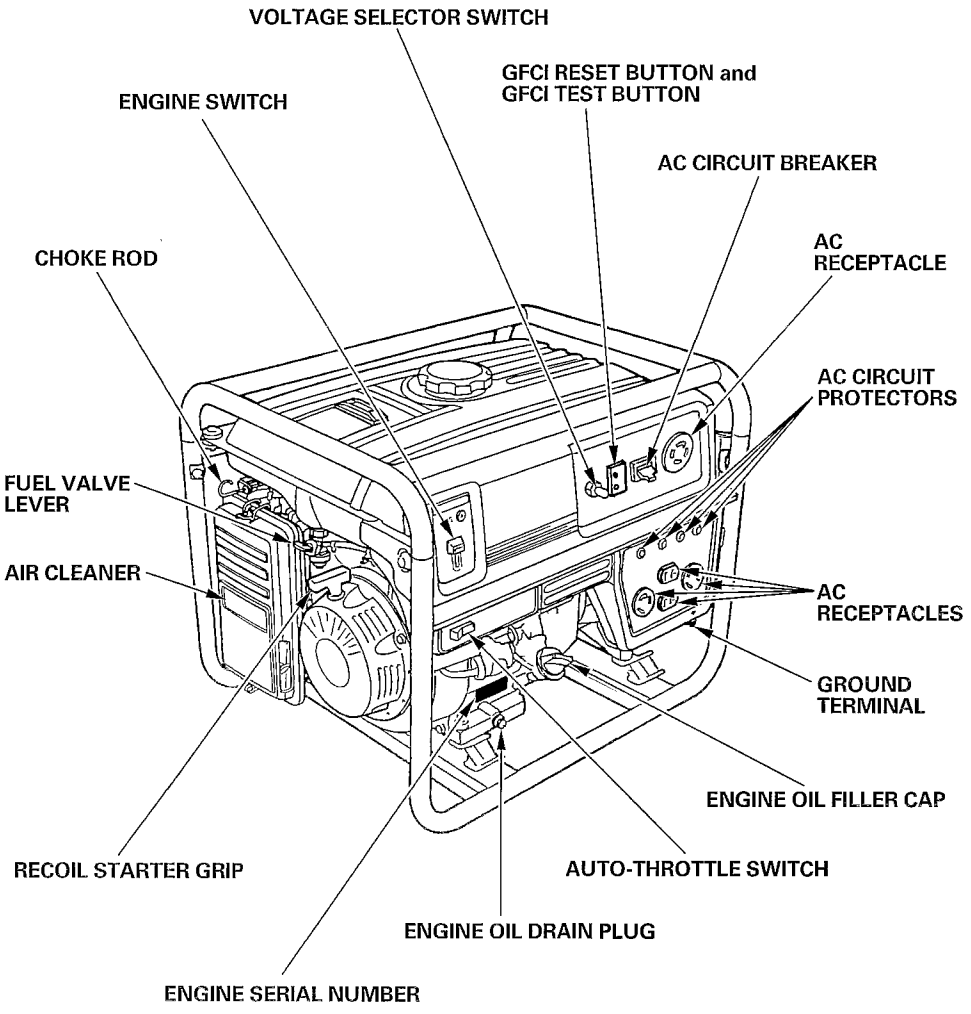
VOLTAGE SELECTOR SWITCH
GFCI RESET BUTTON and
GFCI TEST BUTTON
ENGINE SWITCH
AC CIRCUIT BREAKER
CHOKE ROD
AC
RECEPTACLE
AC CIRCUIT
PROTECTORS
FUEL VALVE
LEVER
AIR CLEANER
AC
RECEPTACLES
GROUND
TERMINAL
ENGINE OIL FILLER CAP
RECOIL STARTER GRIP
AUTO-THROTTLE SWITCH
ENGINE OIL DRAIN PLUG
ENGINE SERIAL NUMBER

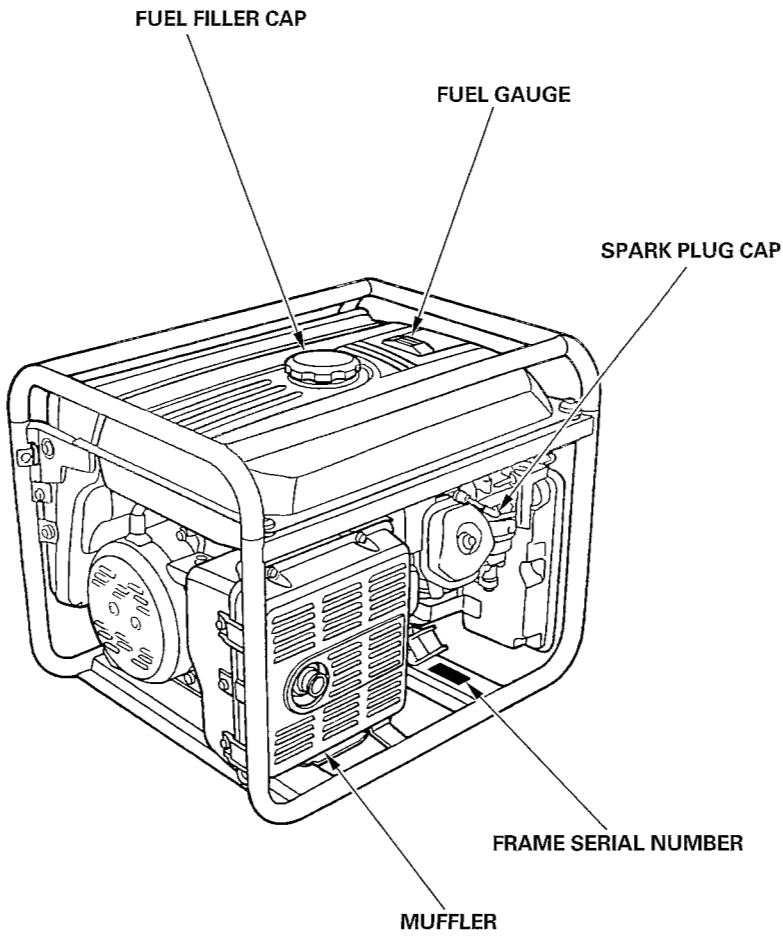

*Record the engine and frame serial numbers for your future reference. Refer to these serial numbers when ordering parts, and when making technical or warranty inquiries (see page 52).

Frame serial number: _____

Engine serial number: _____

ENGINE SWITCH

To start and stop the engine.
Switch position:
OFF: To stop the engine.
ON: To start and run the engine.

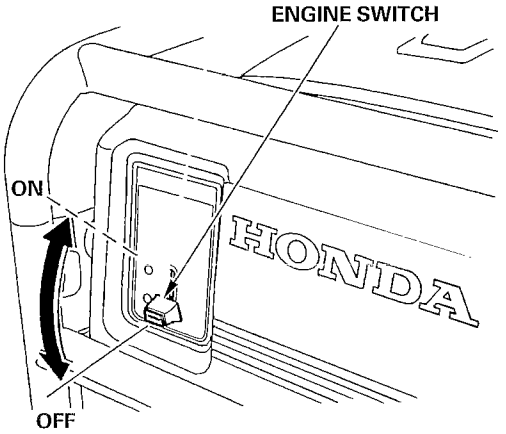

RECOIL STARTER

To start the engine, pull the starter grip lightly until resistance is felt, then pull briskly.

NOTICE

Do not allow the starter grip to snap back against the engine. Return it gently to prevent damage to the starter.

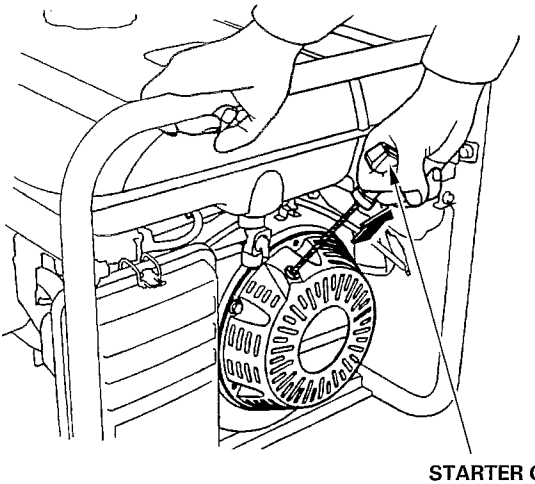

FUEL VALVE LEVER

The fuel valve is located between the fuel tank and carburetor. When the valve lever is in the ON position, fuel is allowed to flow from the fuel tank to the carburetor. Be sure to return the fuel valve lever to the OFF position after stopping the engine.

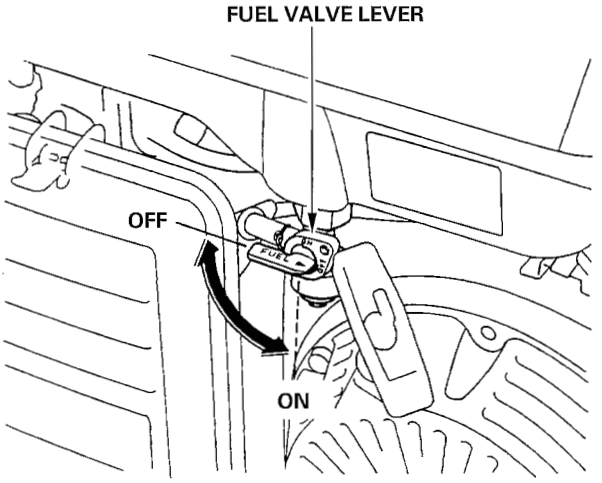

CHOKE ROD

The choke is used to provide an enriched fuel mixture when starting a cold engine. It can be opened and closed by operating the choke rod manually. Pull the rod out toward CLOSED to enrich the mixture for cold starting.

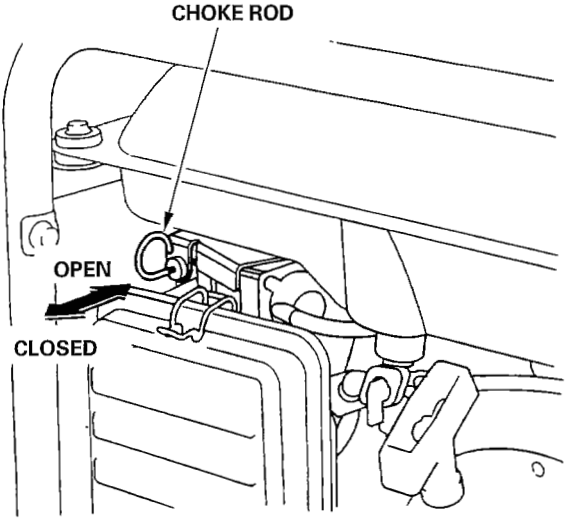

VOLTAGE SELECTOR SWITCH (DUAL VOLTAGE SYSTEM)

The voltage selector switches the main power carrying windings of the generator to produce "120V ONLY" or "120/240V". If a 240V appliance is connected to the 4-prong receptacle, the switch must be in the "120/240V" position. If only a 120V appliance is being connected to any of the 120V 3-prong receptacles, select the "120V ONLY" position.

120/240V: The 120V and 120/240V receptacles can be used simultaneously.

120V ONLY: ONLY the 120V receptacles can be used. Do not use the 120/240V receptacle in this position. Rated power will be available at the 30A 120V locking plug receptacle.

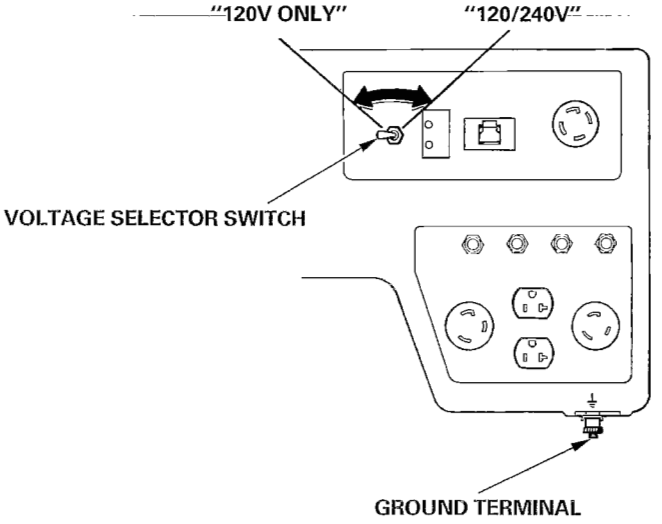

GROUND TERMINAL

The generator ground terminal is connected to the frame of the generator, the metal non-current-carrying parts of the generator, and the ground terminals of each receptacle.

Before using the ground terminal, consult a qualified electrician, electrical inspector or local agency having jurisdiction for local codes or ordinances that apply to the intended use of the generator.

OIL ALERT® SYSTEM

The Oil Alert® system is designed to prevent engine damage caused by an insufficient amount of oil in the crankcase. Before the oil level in the crankcase can fall below a safe limit, the Oil Alert® system will automatically stop the engine (the engine switch will remain in the ON position).

If the engine stops and will not restart, check the engine oil level (see page 27) before troubleshooting in other areas.

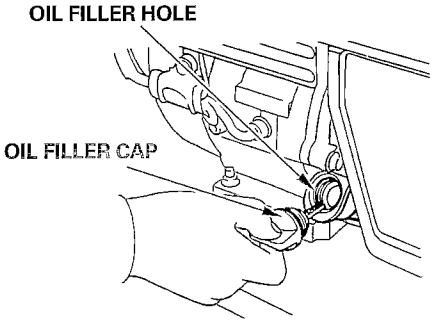

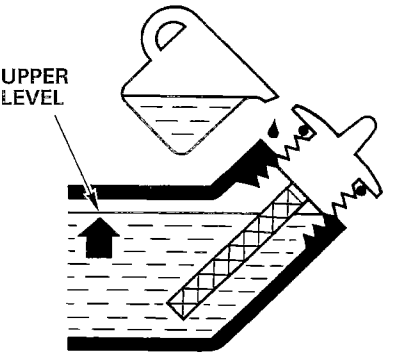

Auto-throttle System

The auto-throttle system automatically reduces engine speed when all loads are turned off or disconnected. When appliances are turned on or reconnected, the engine returns to the rated speed.

AUTO: Recommended to minimize fuel consumption and further reduce noise levels when no load is applied to the generator.

OFF: The auto-throttle system does not operate.
Recommended to minimize warm-up time when the generator is started.

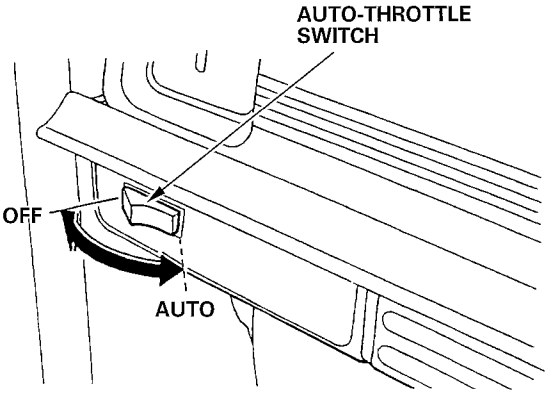

CIRCUIT BREAKER

The circuit breaker will automatically switch OFF if there is a short circuit or a significant overload of the generator at the receptacle, or if the ground-fault circuit interrupter (GFCI) detects a ground-fault current.

Check the following if the circuit breaker switches OFF automatically:

- When the GFCI RESET button is extended (page 19):
  —Unplug all appliances from the receptacle and check the appliance for any defects as described in TROUBLESHOOTING (page 46).

  After making repairs, push the GFCI RESET button then turn the circuit breaker ON.

- When the GFCI RESET button is not extended:
  —Check that the appliance is working properly and does not exceed the rated load capacity of the circuit before switching the circuit breaker ON again.

The circuit breaker may be used to switch the generator power on or off.

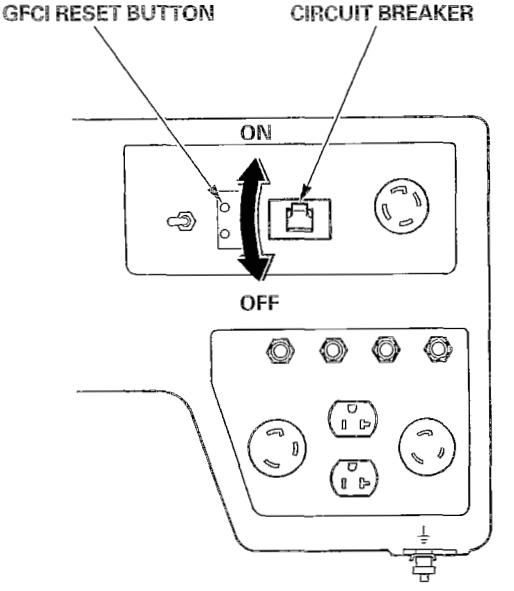

CIRCUIT PROTECTOR

The circuit protectors will automatically switch OFF if there is a short circuit or a significant overload of the generator at the 20A 120V, 30A 120V locking plug, or 120/240V locking plug receptacle. If a circuit protector is switches OFF automatically, check that the appliance is working properly and does not exceed the rated load capacity of the circuit before resetting the circuit protector ON.

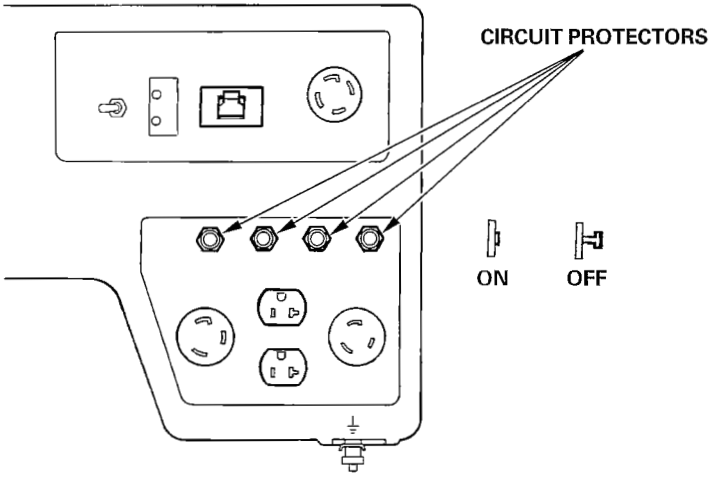

Ground Fault Circuit Interrupter (GFCI)

⚠WARNING

Using the generator in rain, snow or near water can lead to death from electric shock. Keep the generator dry.

All receptacles on the generator are protected by a ground-fault circuit interrupter (GFCI) for protection against the shock hazard of ground-fault current. The GFCI has TEST and RESET buttons and is connected to the circuit breaker.

An example of ground-fault current is the current which would flow through a person who is using an appliance with faulty insulation and, at the same time, is in contact with an electrical ground such as a plumbing fixture, wet floor, or earth.

The ground-fault circuit interrupter will not protect against short circuits or overloads. The circuit breaker in the control panel which supplies power to the circuit provides that protection (refer to circuit breaker on page 15).

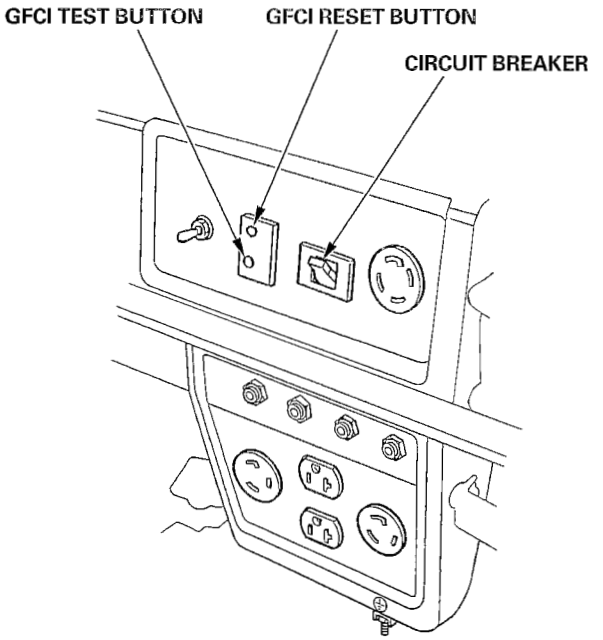

Observe the following precautions to ensure proper GFCI operation and to reduce shock hazards:

- Use grounded 3-conductor extension cords, tools, and appliances, or double-insulated tools and appliances.
- Inspect cords and plugs, and replace if damaged.
- Do not use cord lengths greater than 164 feet (50 meters), and do not use multiple tools and appliances with built-in noise filters. Such use may activate the GFCI and trip the circuit breaker.

Inspection:

Always check GFCI operation before using the generator.

⚠WARNING

You risk electric shock if you operate this generator with a faulty GFCI (ground-fault circuit interrupter).

Test GFCI before use.

If GFCI fails test, do not use your generator. See your Honda dealer.

1. Unplug all tools and appliances from the generator.
2. Start the engine.
3. Turn the circuit breaker to the ON position.
4. Turn the autothrottole switch to the OFF position.
5. Press the GFCI TEST button. The RESET button should extend, and the circuit breaker should switch to the OFF position.

   If the GFCI and circuit breaker do not function as described, take the generator to an authorized Honda generator dealer for repair.

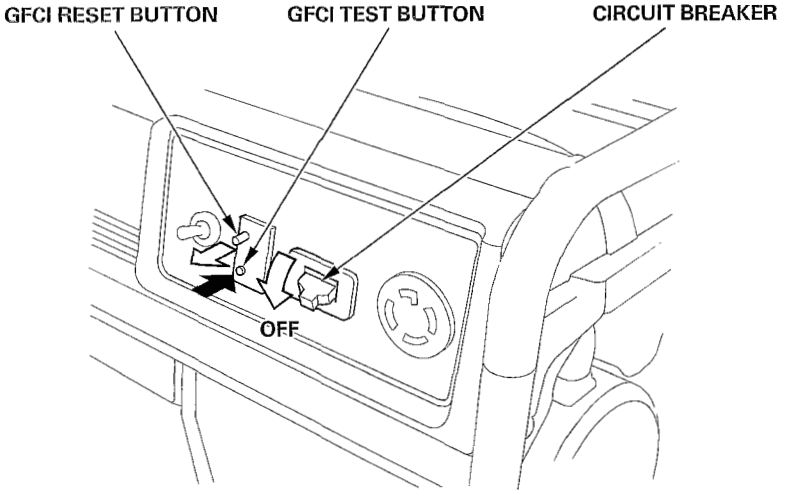

6. Press the GFCI RESET button. The RESET button should stay in, flush with its base plate.

With the RESET button in and engine running, turn the circuit breaker to the ON position. The circuit breaker should remain in the ON position. The circuit breaker will not remain in the ON position if the RESET button is extended.

If the GFCI and circuit breaker do not function as described, take the generator to an authorized Honda generator dealer for repair.

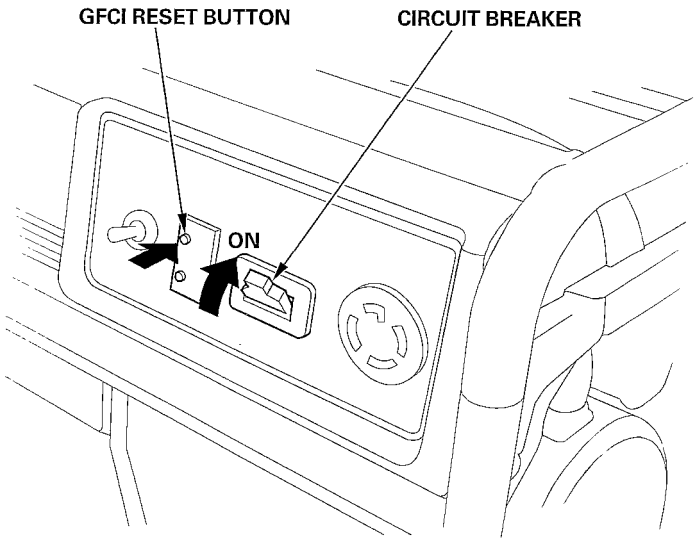

During generator use, if the GFCI RESET button extends and the circuit breaker trips, this usually indicates a faulty power tool, appliance, or cord.

If that occurs, perform test steps 1 through 6 to verify that the GFCI and circuit breaker are in proper working order. If the GFCI and circuit breaker test correctly, then you will know that the fault is in the power tool, appliance, or cord. Repair or replace the faulty power tool, appliance, or cord before further use.

CONNECTIONS TO A BUILDING ELECTRICAL SYSTEM

Connections for standby power to a building electrical system must be made by a qualified electrician. The connection must isolate the generator power from utility power, and must comply with all applicable laws and electrical codes. A transfer switch, which isolates generator power from utility power, is available through authorized Honda generator dealers.

⚠WARNING

Improper connections to a building electrical system can allow electrical current from the generator to backfeed into the utility lines. Such backfeed may electrocute utility company workers or others who contact the lines during a power outage, and the generator may explode, burn, or cause fires when utility power is restored. Consult the utility company or a qualified electrician.

GROUND SYSTEM

Honda portable generators have a system ground that connects generator frame components to the ground terminals in the AC output receptacles. The system ground is not connected to the AC neutral wire. If the generator is tested by a receptacle tester, it will not show the same ground circuit condition as for a home receptacle.

SPECIAL REQUIREMENTS

There may be Federal or State Occupational Safety and Health Administration (OSHA) regulations, local codes, or ordinances that apply to the intended use of the generator. Please consult a qualified electrician, electrical inspector, or the local agency having jurisdiction.

- In some areas, generators are required to be registered with local utility companies.
- If the generator is used at a construction site, there may be additional regulations which must be observed.

AC APPLICATIONS

Before connecting an appliance or power cord to the generator:

- Make sure that it is in good working order. Faulty appliances or power cords can create a potential for electrical shock.

- If an appliance begins to operate abnormally, becomes sluggish or stops suddenly, turn it off immediately. Disconnect the appliance, and determine whether the problem is the appliance, or if the rated load capacity of the generator has been exceeded.

- Make sure that the electrical rating of the tool or appliance does not exceed that of the generator. Never exceed the maximum power rating of the generator. Power levels between rated and maximum may be used for no more than 30 minutes.

NOTICE

Substantial overloading will open the circuit breaker. Exceeding the time limit for maximum power operation or slightly overloading the generator may not switch the circuit breaker OFF, but will shorten the service life of the generator.

Limit operation requiring maximum power to 30 minutes.
Maximum power is:
5.0 kVA
For continuous operation, do not exceed the rated power.
Rated power is:
4.5 kVA
The total power requirements (VA) of all appliances connected must be considered. Appliance and power tool manufacturers usually list rating information near the model number or serial number.

AC OPERATION

1. Check GFCI operation before each use (see page 19).

2. Start the engine (see page30).

3. Turn the voltage selector switch to either position.

   With the voltage selector switch in the "120/240V" position, you can use the 120V and 120/240V receptacles simultaneously. If you are NOT using the 120/240V receptacle, but require more power from the 120V locking plug receptacle, then select the "120V ONLY" position.

4. Make sure that the GFCI RESET button is pushed in (flush with its base plate).

5. Switch ON the AC circuit breaker.

6. Plug in the appliance.

Most motorized appliances require more than their rated wattage for startup.

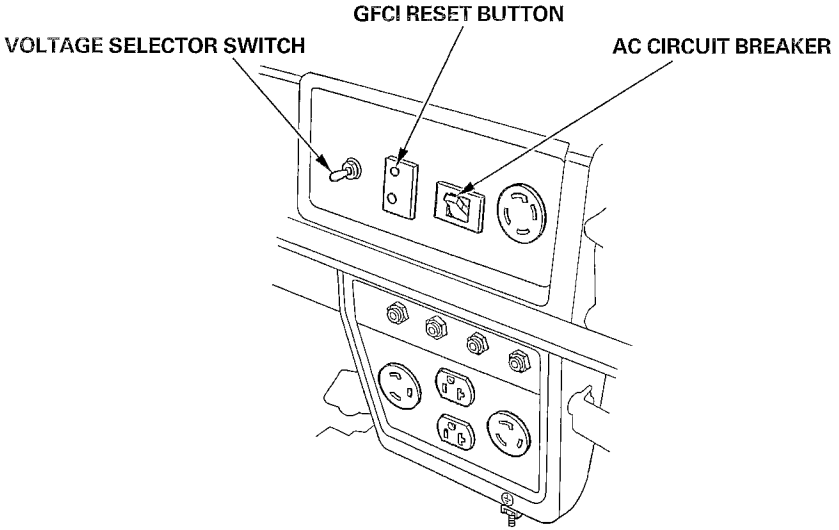

Do not exceed the current limit specified for any one receptacle. If an overloaded circuit causes the AC circuit breaker or circuit protector to switch OFF, reduce the electrical load on the circuit, wait a few minutes and then reset the circuit breaker.

AC RECEPTACLE SELECTION

The generator has separate main power producing circuits. These two circuits supply equal power to different receptacles shown when the voltage selector switch is in the 120/240V position.

When two or more receptacles are used; prevent overloading by dividing the load between the two power circuits.
The chart below shows the rated load in amperes that can be connected to each receptacle to balance the generator.
The total rated ampere draw is 37.5A.

Main power circuit	Receptacles powered by each main circuit	Power distribution
Main Circuit I	2, 3 and 4	2+3+4=18.8A rated.
Main Circuit II	1 and 5	1+5=18.8A rated.

* The table shows the specifications when the 120/240V locking plug receptacle is used for 120V.

Example:

Receptacle 2 has a 10A load connected to it. Receptacle 3 has a 15 A load connected to it. Both receptacles are powered by main power circuit II. The equation tells us that the total power draw on circuit II is 25A. This is a substantial overload of this circuit. To eliminate the excess power draw on circuit II, the load from receptacle 3 should be switched to receptacle 1. Now circuit I is powering the 10A load (less than 18.8A) and circuit II is powering a 15A load (less than 18.8A).

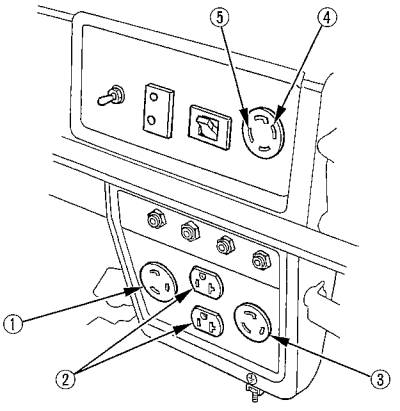

① 120V 30A
② 120V 20A
③ 120V 20A
④&⑤ 120/240V 30A

Auto-throttle System
With the switch in the AUTO position, engine speed is automatically reduced when ALL loads are turned OFF or disconnected. When appliances are turned ON or reconnected, the engine returns to rated speed. In the OFF position, the auto-throttle system does not operate.

The auto-throttle system will not respond to electrical loads of less than 1 ampere. Turn the auto-throttle to the OFF position to operate loads of less than 1 amp.

Appliances with large start-up power demands may not allow the engine to reach normal operating rpm when they are connected to the generator. Turn the auto-throttle to the OFF position and connect the appliance to the generator. If the engine still will not reach normal operating speed, check that the appliance does not exceed the rated load capacity of the generator.

To avoid extended warm-up periods, keep the switch OFF until the engine reaches operating temperature.

The auto-throttle system is not effective for use with appliances that require only momentary power. If the tool or appliance will be turned ON and OFF quickly, the auto-throttle switch should be in the OFF position.

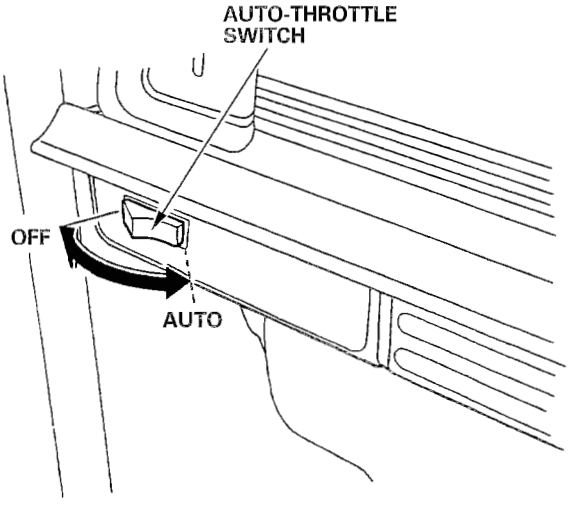

• HIGH ALTITUDE OPERATION

At high altitude, the standard carburetor air-fuel mixture will be too rich. Performance will decrease, and fuel consumption will increase. A very rich mixture will also foul the spark plug and cause hard starting.

High altitude performance can be improved by specific modifications to the carburetor. If you always operate your generator at altitudes above 1,500 meters (5,000 feet), have your dealer perform this carburetor modification.

Even with carburetor modification, engine horsepower will decrease about 3.5% for each 300-meter (1,000-foot) increase in altitude. The effect of altitude on horsepower will be greater than this if no carburetor modification is made.

NOTICE

When the carburetor has been modified for high altitude operation, the air-fuel mixture will be too lean for low altitude use. Operation at altitudes below 1,500 meters (5,000 feet) with a modified carburetor may cause the engine to overheat and result in serious engine damage. For use at low altitudes, have your dealer return the carburetor to original factory specifications.

ENGINE OIL

NOTICE

Engine oil is a major factor affecting engine performance and service life. Non detergent and 2-stroke engine oils will damage the engine and are not recommended.

Check the oil level BEFORE EACH USE with the generator on a level surface and the engine stopped.

Use 4-stroke motor oil that meets or exceeds the requirements for API service classification SJ. Always check the API SERVICE label on the oil container to be sure it includes the letters SJ.

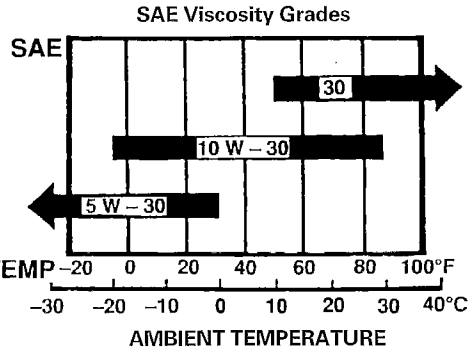

SAE 10W-30 is recommended for general, all-temperature use. Other viscosities shown in the chart may be used when the average temperature in your area is within the indicated range.

1. Remove the oil filler cap and wipe the dipstick clean.
2. Check the oil level by inserting the dipstick into the filler neck without screwing it in.
3. If the level is low, fill to the top of the oil filler neck with the recommended oil.

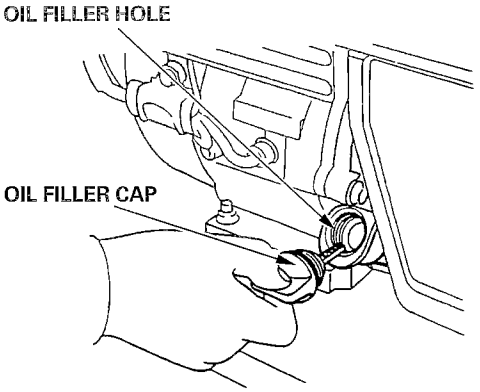

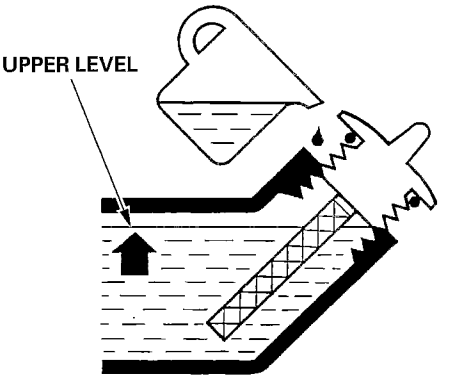

Fuel

Check the fuel gauge, and refill the tank if the fuel level is low.

Refuel carefully to avoid spilling fuel. Do not fill above the shoulder of the fuel strainer.

⚠WARNING

Gasoline is highly flammable and explosive, and you can be burned or seriously injured when refueling.

- **Stop engine and keep heat, sparks, and flame away.**
- **Refuel only outdoors.**
- **Wipe up spills immediately.**

Fuel tank capacity: 4.49 US gal (17.0 ℓ , 3.74 Imp gal)

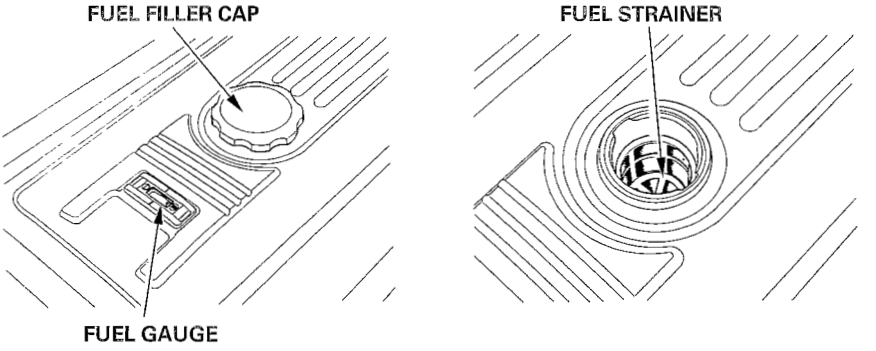

NOTICE

Fuel can damage paint and plastic. Be careful not to spill fuel when filling your fuel tank. Damage caused by spilling fuel is not covered under warranty.

Use unleaded gasoline with a pump octane rating of 86 or higher.

This engine is certified to operate on unleaded gasoline. Unleaded gasoline produces fewer engine and spark plug deposits and extends exhaust system life.
Never use stale or contaminated gasoline or an oil/gasoline mixture. Avoid getting dirt or water in the fuel tank.

Occasionally you may hear a light "spark knock" or "pinging" (metallic rapping noise) while operating under heavy loads. This is no cause for concern.
If spark knock or pinging occurs at a steady engine speed, under normal load, change brands of gasoline. If spark knock or pinging persists, see an authorized Honda generator dealer.

NOTICE

Running the engine with persistent spark knock or pinging can cause engine damage.

Running the engine with persistent spark knock or pinging is misuse, and the *Distributor's Limited Warranty* does not cover parts damaged by misuse.

Oxygenated Fuels

Some conventional gasolines are being blended with alcohol or an ether compound. these gasolines are collectively referred to as oxygenated fuels. To meet clean air standards, some areas of the United States and Canada use oxygenated fuels to help reduce emissions.
If you use an oxygenated fuel, be sure it is unleaded and meets the minimum octane rating requirement.
Before using an oxygenated fuel, try to confirm the fuel's contents. Some states/provinces require this information to be posted on the generator.
The following are the EPA approved percentages of oxygenates:

ETHANOL — (ethyl or grain alcohol) 10% by volume
You may use gasoline containing up to 10% ethanol by volume. Gasoline containing ethanol may be marketed under the name "Gasohol".

MTBE — (methyl tertiary butyl ether) 15% by volume
You may use gasoline containing up to 15% MTBE by volume.

METHANOL — (methyl or wood alcohol) 5% by volume
You may use gasoline containing up to 5% methanol by volume as long as it also contains cosolvents and corrosion inhibitors to protect the fuel system. Gasoline containing more than 5% methanol by volume may cause starting and/or performance problems. It may also damage metal, rubber, and plastic parts of your fuel system.

If you notice any undesirable operating symptoms, try another service station or switch to another brand of gasoline.
Fuel system damage or performance problems resulting from the use of an oxygenated fuel containing more than the percentages of oxygenates mentioned above are not covered under warranty.

STARTING THE ENGINE/STOPPING THE ENGINE

STARTING THE ENGINE

1. Make sure that the AC circuit breaker is in the OFF position. The generator may be hard to start if a load is connected.
2. Turn the fuel valve lever to the ON position.
3. Pull the choke rod to the CLOSE position.
4. Make sure the auto-throttle switch is in the OFF position, or more time will be required for warm up.
5. Move the engine switch to the ON position.
6. Pull the starter grip lightly until resistance is felt, then pull briskly.

NOTICE

Do not allow the starter grip to snap back against the engine. Return it gently to prevent damage to the starter.

7. Push the choke rod to the OPEN position as the engine warms up.
8. If you wish to use the auto-throttle system, turn the auto-throttle switch to the AUTO position after the engine has warmed up for 2 or 3 minutes.

STOPPING THE ENGINE

In an emergency:

1. To stop the engine in an emergency, move the engine switch to the OFF position.

In normal use:

1. Turn the AC circuit breaker to the OFF position.
2. Move the engine switch to the OFF position.
3. Turn the fuel valve lever to the OFF position.

THE IMPORTANCE OF MAINTENANCE

Good maintenance is essential for safe, economical, and trouble-free operation. It will also help reduce air pollution.

⚠WARNING

Improper maintenance, or failure to correct a problem before operation, can cause a malfunction in which you can be seriously hurt or killed.

Always follow the inspection and maintenance recommendations and schedules in this owner's manual.

To help you properly care for your generator, the following pages include a maintenance schedule, routine inspection procedures, and simple maintenance procedures using basic hand tools. Other service tasks that are more difficult, or require special tools, are best handled by professionals and are normally performed by a Honda technician or other qualified mechanic.

The maintenance schedule applies to normal operating conditions. If you operate your generator under severe conditions, such as sustained high-load or high-temperature operation, or use it in unusually wet or dusty conditions, consult your servicing dealer for recommendations applicable to your individual needs and use.

Maintenance, replacement, or repair of the emission control devices and systems may be performed by any engine repair establishment or individual, using parts that are "certified" to EPA standards.

MAINTENANCE SAFETY

Some of the most important safety precautions follow. However, we cannot warn you of every conceivable hazard that can arise in performing maintenance. Only you can decide whether or not you should perform a given task.

⚠WARNING

Failure to properly follow maintenance instructions and precautions can cause you to be seriously hurt or killed.

Always follow the procedures and precautions in the owner's manual.

Safety Precautions

- Make sure the engine is off before you begin any maintenance or repairs. This will eliminate several potential hazards:

  —**Carbon monoxide poisoning from engine exhaust.**
  Be sure there is adequate ventilation whenever you operate the engine.

  —**Burns from hot parts.**
  Let the engine and exhaust system cool before touching.

  —**Injury from moving parts.**
  Do not run the engine unless instructed to do so.

- Read the instructions before you begin, and make sure you have the tools and skills required.

- To reduce the possibility of fire or explosion, be careful when working around gasoline. Use only a nonflammable solvent, not gasoline, to clean parts. Keep cigarettes, sparks, and flames away from all fuel-related parts.

Remember that your servicing dealer knows your generator best and is fully equipped to maintain and repair it.

To ensure the best quality and reliability, use only new, genuine Honda parts or their equivalents for repair or replacement.

EMISSION CONTROL SYSTEM INFORMATION

Source of Emissions

The combustion process produces carbon monoxide, oxides of nitrogen, and hydrocarbons. Control of hydrocarbons and oxides of nitrogen is very important because, under certain conditions, they react to form photochemical smog when subjected to sunlight. Carbon monoxide does not react in the same way, but it is toxic.

Honda utilizes lean carburetor settings and other systems to reduce the emissions of carbon monoxide, oxides of nitrogen, and hydrocarbons.

The U.S. and California Clean Air Acts

EPA and California regulations require all manufacturers to furnish written instructions describing the operation and maintenance of emission control systems.

The following instructions and procedures must be followed in order to keep the emissions from your Honda engine within the emission standards.

Tampering and Altering

Tampering with or altering the emission control system may increase emissions beyond the legal limit. Among those acts that constitute tampering are:

- Removal or alteration of any part of the intake, fuel, or exhaust systems.
- Altering or defeating the governor linkage or speed-adjusting mechanism to cause the engine to operate outside its design parameters.

Problems That May Affect Emissions

If you are aware of any of the following symptoms, have your engine inspected and repaired by your servicing dealer.

- Hard starting or stalling after starting.
- Rough idle.
- Misfiring or backfiring under load.
- Afterburning (backfiring).
- Black exhaust smoke or high fuel consumption.

Replacement Parts

The emission control systems on your Honda engine were designed, built, and certified to conform with EPA and California emission regulations. We recommend the use of genuine Honda parts whenever you have maintenance done. These original-design replacement parts are manufactured to the same standards as the original parts, so you can be confident of their performance. The use of replacement parts that are not of the original design and quality may impair the effectiveness of your emission control system.

A manufacturer of an aftermarket part assumes the responsibility that the part will not adversely affect emission performance. The manufacturer or rebuilder of the part must certify that use of the part will not result in a failure of the engine to comply with emission regulations.

Maintenance

Follow the maintenance schedule on page 37 . Remember that this schedule is based on the assumption that your machine will be used for its designed purpose. Sustained high-load or high-temperature operation, or use in unusually wet or dusty conditions, will require more frequent service.

AIR INDEX

An Air Index Information hang tag/label was applied to this engine in accordance with the requirements of the California Air Resources Board.

The bar graph is intended to provide you, our customer, the ability to compare the emissions performance of available engines. The lower the Air Index, the less pollution.

The durability description is intended to provide you with information relating to the engine's emission durability period. The descriptive term indicates the useful-life period for the engine's emission control system. See your *Emission Control Warranty* for additional information.

Descriptive Term	Applicable to Emissions Durability Period
Moderate	50 hours (0—65 cc) 125 hours (greater than 65 cc)
Intermediate	125 hours (0—65 cc) 250 hours (greater than 65 cc)
Extended	300 hours (0—65 cc) 500 hours (greater than 65 cc)

The Air Index Information hang tag must remain on the generator until it is sold. Remove the hang tag before operating the generator.

MAINTENANCE SCHEDULE

	ITEM / REGULAR SERVICE PERIOD (3) Performed at every indicated month or operating hour interval, whichever comes first.		Before each use	First month or 20 Hrs.	Every 3 months or 50 Hrs.	Every 6 months or 100 Hrs.	Every year or 300 Hrs.
•	Engine oil	Check	○				
		Change		○		○	
•	Air cleaner	Check	○				
		Clean			○(1)		
	GFCI	Check	○				
•	Sediment cup	Clean				○	
•	Spark plug	Clean-Adujst				○	
		Replace					○
	Spark arrester	Clean				○	
•	Idle speed	Check-Adujst					○(2)
•	Valve clearance	Check-Adujst					○(2)
•	Combustion chamber	Clean					After every 500 Hrs. (2)
•	Fuel tank and filter	Clean				○(2)	
•	Fuel tube	Check	Every 2 years (Replace if necessary)(2)				

• Emission related items.

(1) Service more frequently when used in dusty areas.

(2) These items should be serviced by an authorized Honda generator dealer, unless the owner has the proper tools and is mechanically proficient. See the Honda Shop Manual.

(3) For commercial use, log hours of operation to determine proper maintenance intervals.

ENGINE OIL CHANGE

Drain the oil while the engine is warm to assure rapid and complete draining.

1. Remove the drain plug and sealing washer, remove the oil filler cap, and drain the oil.
2. Reinstall the drain plug and sealing washer. Tighten the plug securely.
3. Refill with the recommended oil (see page 27) and check the oil level.

Oil capacity:

1.2 US qt (1.1 ℓ , 1.0 Imp qt)

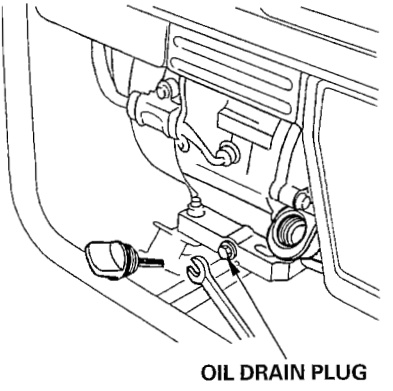

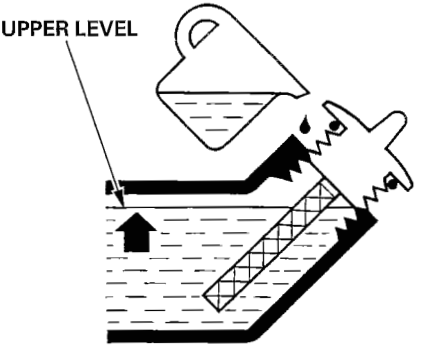

Wash your hands with soap and water after handling used oil.

Please dispose of used motor oil in a manner that is compatible with the environment. We suggest you take it in a sealed container to your local service station or recycling center for reclamation. Do not throw it in the trash, pour it on the ground, or down a drain.

AIR CLEANER SERVICE

A dirty air cleaner will restrict air flow to the carburetor. To prevent carburetor malfunction, service the air cleaner regularly. Service more frequently when operating the generator in extremely dusty areas.

NOTICE

Never run the generator without the air filter. Rapid engine wear will result.

1. Unsnap the air cleaner cover clips, remove the air cleaner cover, and remove the element.

2. Wash the air filter in a solution of household detergent and warm water, then rinse thoroughly, or wash in nonflammable or high flashpoint solvent. Allow the air filter to dry thoroughly.

3. Soak the air filter in clean engine oil and squeeze out the excess oil. The engine will smoke during initial startup if too much oil is left in the air filter.

4. Reinstall the air cleaner element and the cover.

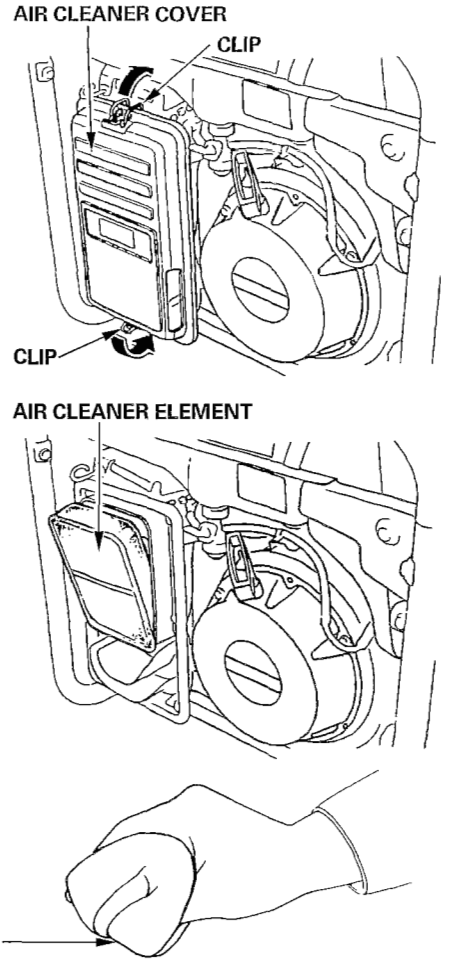

FUEL SEDIMENT CUP CLEANING

The sediment cup prevents dirt or water which may be in the fuel tank from entering the carburetor. If the engine has not been run for a long time, the sediment cup should be cleaned.

1. Turn the fuel valve lever to the OFF position. Remove the sediment cup, O-ring, and filter.
2. Clean the sediment cup, O-ring, and filter in nonflammable or high flash point solvent.
3. Reinstall the filter, O-ring, and sediment cup.
4. Turn the fuel valve lever ON and check for leaks.

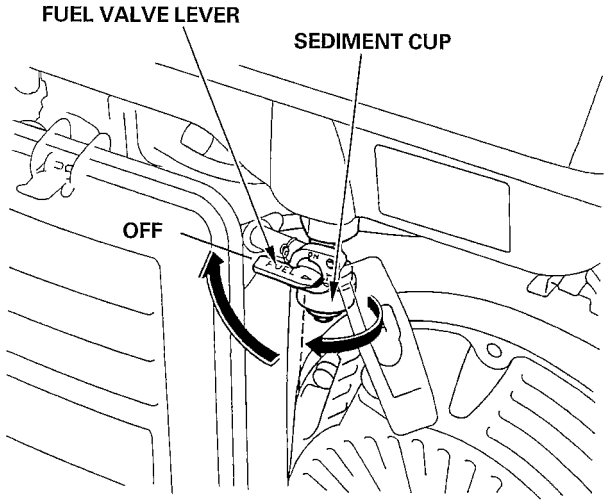

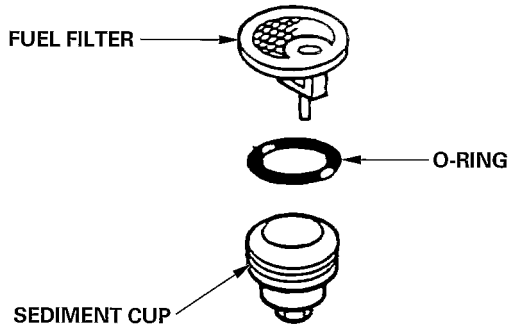

SPARK PLUG SERVICE

In order to service the spark plug, you will need a spark plug wrench (commercially available).

Recommended spark plugs: BPR5ES (NGK)
W16EPR-U (DENSO)

To ensure proper engine operation, the spark plug must be properly gapped and free of deposits.

If the engine has been running, the muffler will be very hot. Be careful not to touch the muffler.

1. Remove the spark plug cap.
2. Clean any dirt from around the spark plug base.
3. Use a spark plug wrench to remove the spark plug.

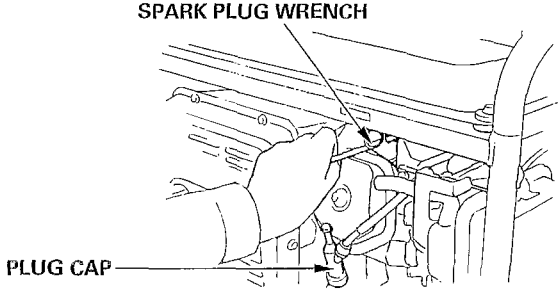

4. Visually inspect the spark plug. Discard it if the insulator is cracked or chipped. Clean the spark plug with a wire brush if it is to be reused.
5. Measure the plug gap with a feeler gauge.
   Correct as necessary by carefully bending the side electrode.

   The gap should be:
   0.028—0.031 in (0.70—0.80 mm)

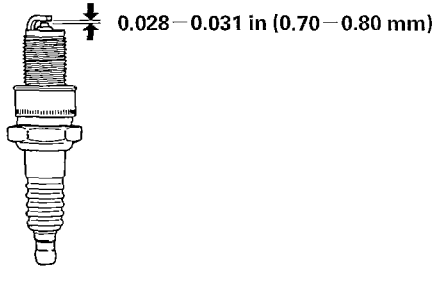

6. Check that the spark plug washer is in good condition, and thread the spark plug in by hand to prevent cross-threading.
7. After the spark plug is seated, tighten with a spark plug wrench to compress the washer.

   —If installing a new spark plug, tighten 1/2 turn after the spark plug seats to compress the washer. If reinstalling a used spark plug, tighten 1/8—1/4 turn after the spark plug seats to compress the washer.

NOTICE

The spark plug must be securely tightened. An improperly tightened spark plug can become very hot and could damage the engine.
Never use spark plugs which have an improper heat range. Use only the recommended spark plugs or equivalent.

SPARK ARRESTER MAINTENANCE

If the generator has been running, the muffler will be very hot. Allow it to cool before proceeding.

NOTICE

The spark arrester must be serviced every 100 hours to maintain its efficiency.

Clean the spark arrester as follows:
1. Loosen the screw by the exhaust port of the muffler and remove the spark arrester.
2. Use a brush to remove carbon deposits from the spark arrester screen.
   Inspect the screen for breaks or tears and replace it if necessary.
3. Install the spark arrester in the reverse order of removal.

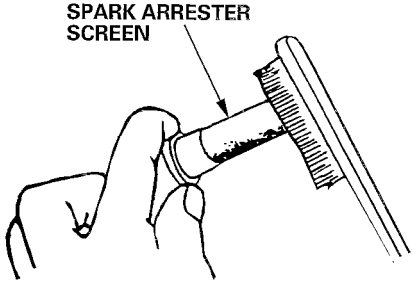

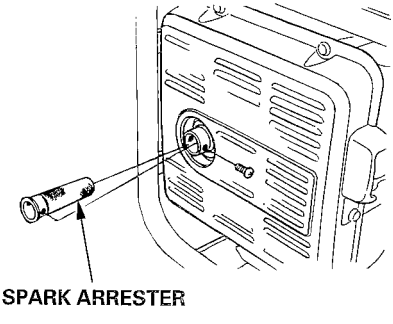

When transporting the generator, turn the engine switch and the fuel valve OFF. Keep the generator level to prevent fuel spillage. Fuel vapor or spilled fuel may ignite.

⚠WARNING

Contact with a hot engine or exhaust system can cause serious burns or fires. Let the engine cool before transporting or storing the generator.

Take care not to drop or strike the generator when transporting. Do not place heavy objects on the generator.

Before storing the unit for an extended period:

1. Be sure the storage area is free of excessive humidity and dust.
2. Service according to the table below:

STORAGE TIME	RECOMMENDED SERVICE PROCEDURE TO PREVENT HARD STARTING
Less than 1 month	No preparation required
1 to 2 months	Fill with fresh gasoline and add gasoline conditioner *.
2 months to 1 year	Fill with fresh gasoline and add gasoline conditioner *. Drain the carburetor float bowl. (page 44). Drain the fuel sediment cup. (page 40).
1 year or more	Fill with fresh gasoline and add gasoline conditioner *. Drain the carburetor float bowl. (page 44). Drain the fuel sediment cup. (page 40). Remove the spark plug. Put a tablespoon of engine oil into the cylinder. Turn the engine slowly with the pull rope to distribute the oil. Reinstall the spark plug. Change the engine oil. (page 38). After removal from storage, drain the stored gasoline into a suitable container, and fill with fresh gasoline before starting.
*Use gasoline conditioners that are formulated to extend storage life. Contact your authorized Honda generator dealer for conditioner recommendations.	

1. Drain the carburetor by loosening the drain screw. Drain the gasoline into a suitable container.

⚠WARNING

Gasoline is extremely flammable and is explosive under certain conditions. Perform this task in a well-ventilated area with the engine stopped. Do not smoke or allow flames or sparks in the area during this procedure.

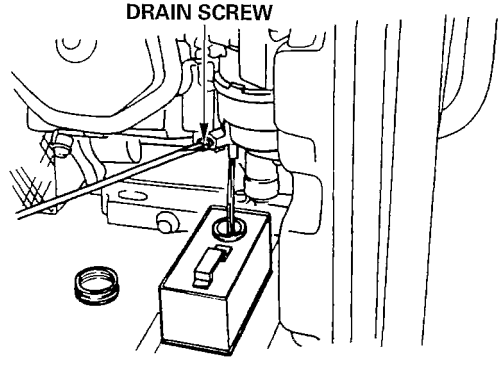

2. Change the engine oil (page 38).
3. Remove the spark plug, and pour about a tablespoon of clean engine oil into the cylinder. Crank the engine several revolutions to distribute the oil, then reinstall the spark plug.
4. Slowly pull the starter grip until resistance is felt. At this point, the piston is coming up on its compression stroke and both the intake and exhaust valves are closed. Storing the engine in this position will help to protect it from internal corrosion.

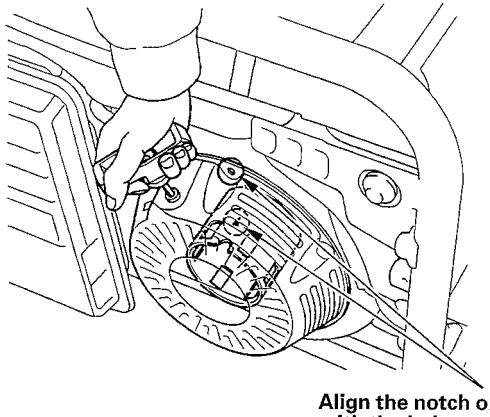

Align the notch on the starter pulley with the hole at the top of recoil starter.

When the engine will not start:

Is there fuel in the tank? NO → Refill the fuel tank.

YES

Is there enough oil in the engine? NO → Add the recommended oil.

YES

Is there a spark from the spark plug? NO → Replace the spark plug. Still NO spark → Take the generator to an authorized Honda generator dealer.

⚠WARNING

Be sure there is no spilled fuel around the spark plug. Spilled fuel may ignite.

To check:
1) Remove the spark plug cap and clean any dirt from around the spark plug.
2) Remove the spark plug and install the spark plug in the plug cap.
3) Set the plug side electrode on the cylinder head.
4) Crank the engine, sparks should jump across the gap.

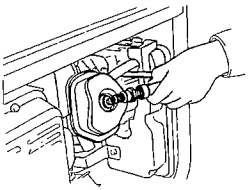

YES

Is the fuel reaching the carburetor? NO → Clean the fuel sediment cup.

YES

If the engine still does not start, take the generator to an authorized Honda generator dealer.

To check:
1) Turn off the engine switch and loosen the drain screw.
2) Turn the fuel valve to ON. Fuel should flow from the drain when the fuel valve is turned ON.

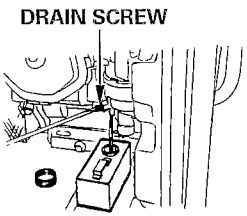

No electricity at the AC receptacles:

〈When the GFCI RESET button is extended〉

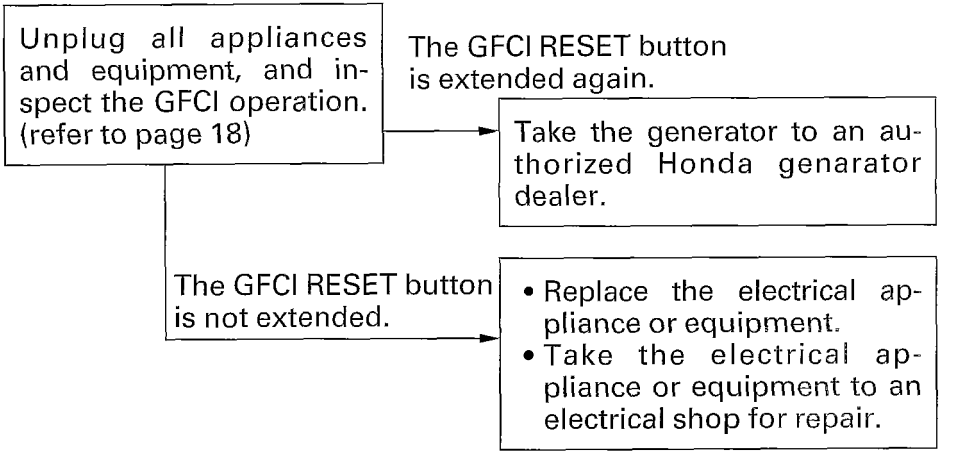

〈When the GFCI RESET button is not extended〉

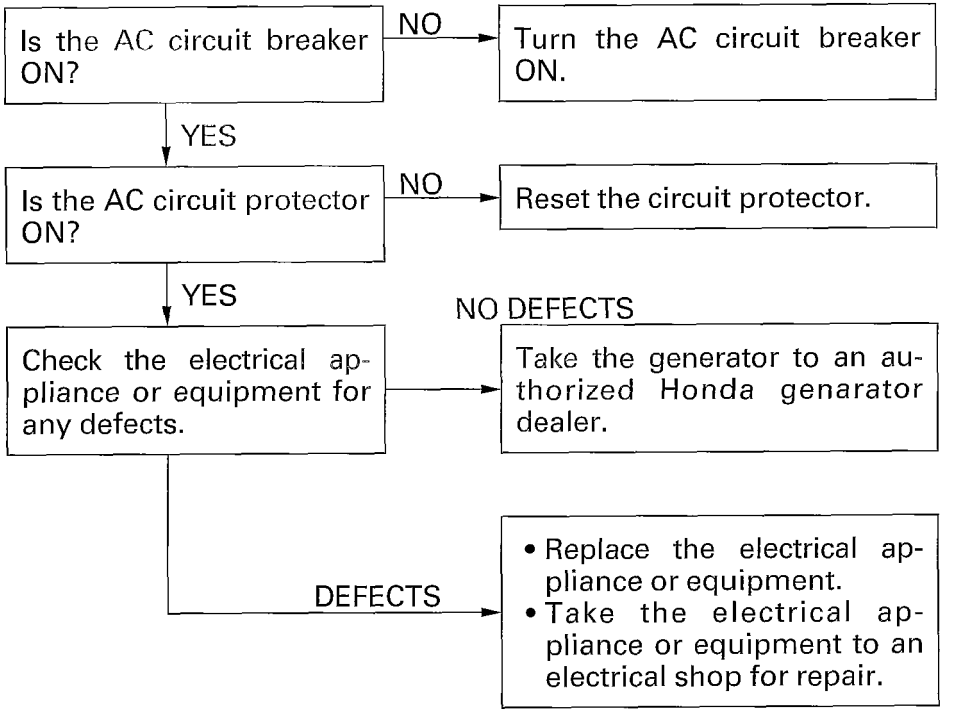

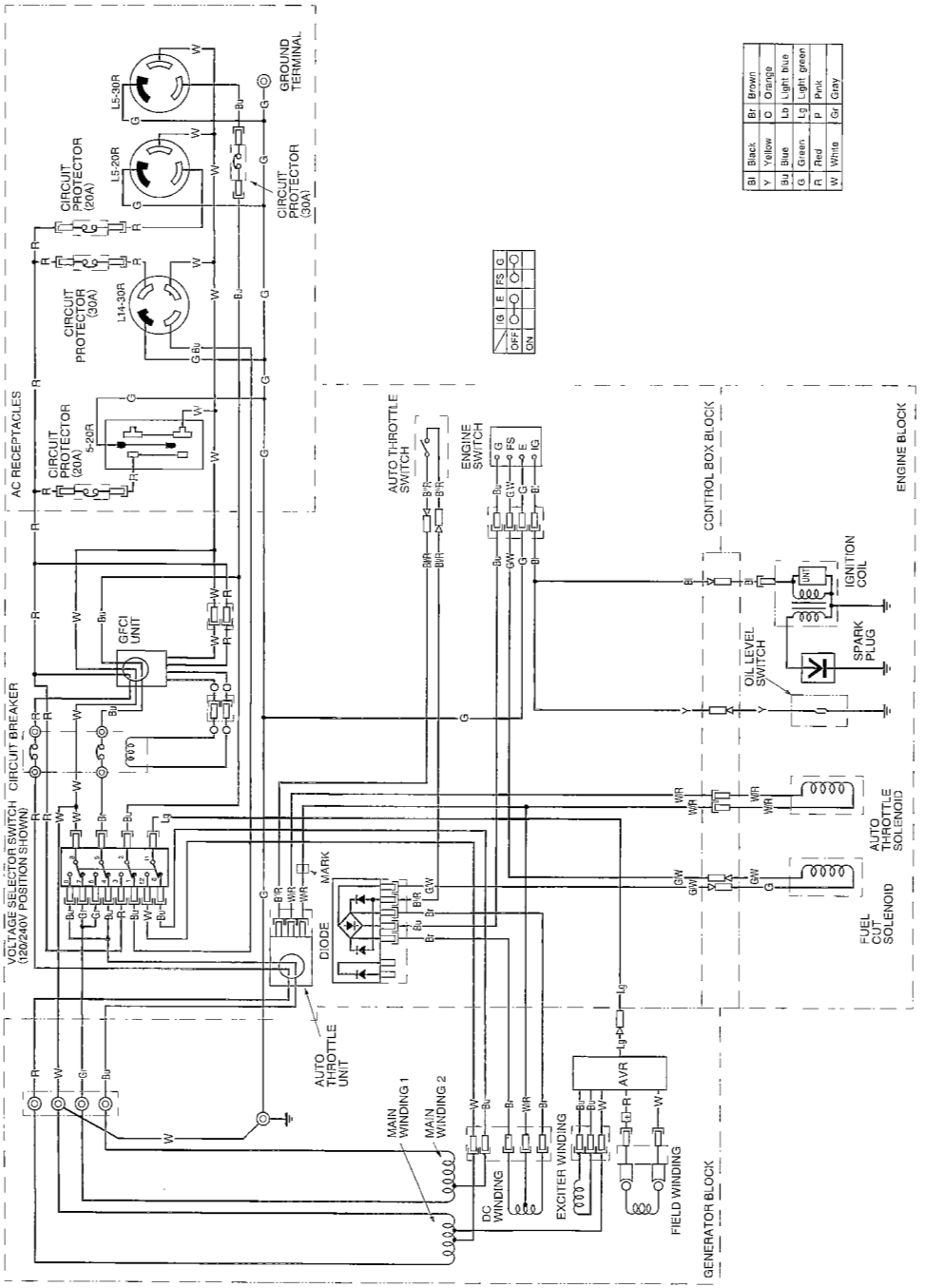
AC RECEPTACLES
CIRCUIT PROTECTOR (20A) 5-20R
CIRCUIT PROTECTOR (20A) L14-30R
CIRCUIT PROTECTOR (20A) L5-20R
CIRCUIT PROTECTOR (30A) L5-30R
GROUND TERMINAL
GFCI UNIT
VOLTAGE SELECTOR SWITCH (120/240V POSITION SHOWN)
CIRCUIT BREAKER
AUTO THROTTLE UNIT
DIODE
MARK
AUTO THROTTLE SWITCH
ENGINE SWITCH
G E FS G
OFF
ON
CONTROL BOX BLOCK
IGNITION COIL
UNIT
SPARK PLUG
OIL LEVEL SWITCH
AUTO THROTTLE SOLENOID
FUEL CUT SOLENOID
ENGINE BLOCK
MAIN WINDING 1
MAIN WINDING 2
DC WINDING
EXCITER WINDING
AVR
FIELD WINDING
GENERATOR BLOCK
Bl Black
Br Brown
Y Yellow
O Orange
Bu Blue
Lb Light blue
G Green
Lg Light green
R Red
P Pink
W White
Gr Gray

SPECIFICATIONS

Dimensions

Model	EB5000X
Power product description code	EA7
Length	25.8 in (655 mm)
Width	20.1 in (510 mm)
Height	19.3 in (490 mm)
Dry weight	172 lbs (78 kg)

Engine

Model	GX340 K1
Engine Type	4-stroke, overhead valve, single cylinder
Displacement 〔Bore × Stroke〕	20.6 cu-in (337 cm^3) [3.2 × 2.5 in (82 × 64 mm)]
Compression Ratio	8.0 : 1
Engine Speed	3,600 rpm
Cooling System	Forced air
Ignition System	Transistorized magneto
Oil Capacity	1.2 US qt (1.1 ℓ , 1.0 Imp qt)
Fuel Tank Capacity	4.49 US gal (17.0 ℓ , 3.74 Imp gal)
Spark Plug	BPR5ES (NGK) W16EPR-U (DENSO)

Generator

Model		EB5000X
Type		A
AC output	Rated voltage	120/240 V
	Rated frequency	60 Hz
	Rated ampere	37.5/18.8 A
	Rated output	4.5 kVA
	Maximum output	5.0 kVA

Tune-up Specifications

ITEM	SPECIFICATION	MAINTENANCE
Spark plug gap	0.028—0.031 in (0.70—0.80 mm)	Refer to page: 41
Valve clearance	IN: 0.15 ± 0.02 mm (cold) EX: 0.20 ± 0.02 mm (cold)	See your authorized Honda dealer
Other specifications	No other adjustments needed.	

NOTE:
Specifications may vary according to the types, and are subject to change without notice.

Hanger Kit Installation

1. Remove the upper frame. Install the hanger on it and install the upper frame on the body.

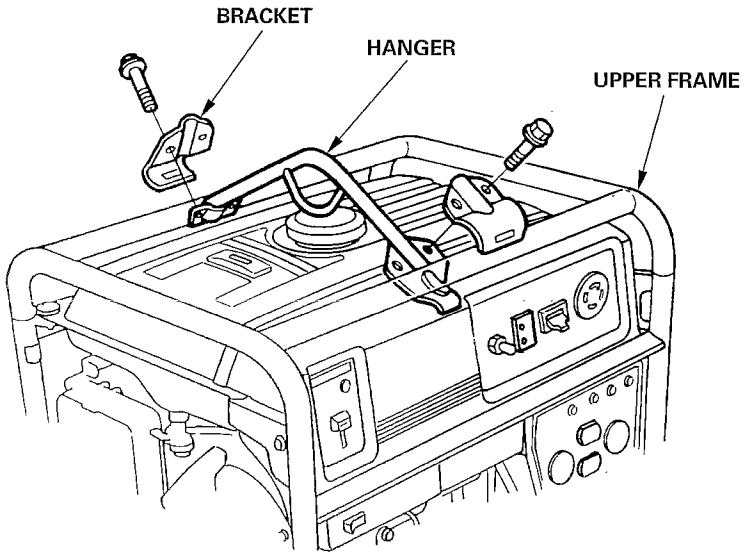

NOTE:

Install at near center avoiding the fuel filler cap.

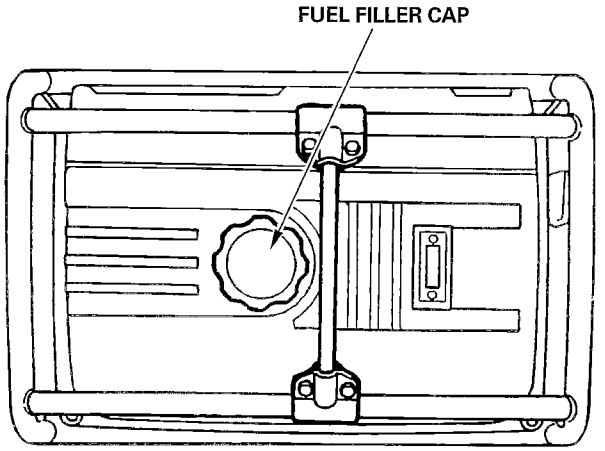

4 Wheel Kit Installation

1. Install the four wheels on the axle shaft.
2. Install the axle assembly on the generator using four bolts and nuts.

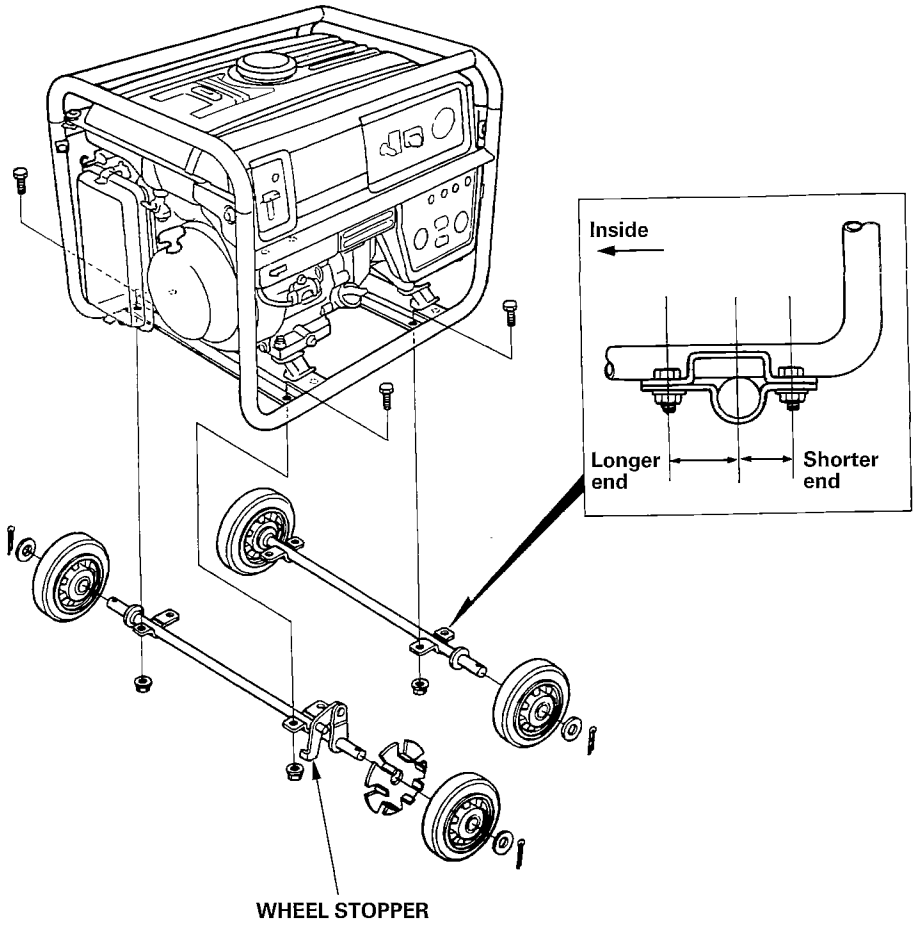

NOTE:
Install the shaft with wheel stopper facing engine side.

2 Wheel Kit Installation

1. Install the two wheels on the axle shaft.
2. Install the axle assembly on the generator using four bolts and nuts.
3. Install the two stands using four bolts and nuts.
4. Install right and left handles on the generator upper frame using brackets and six bolts.

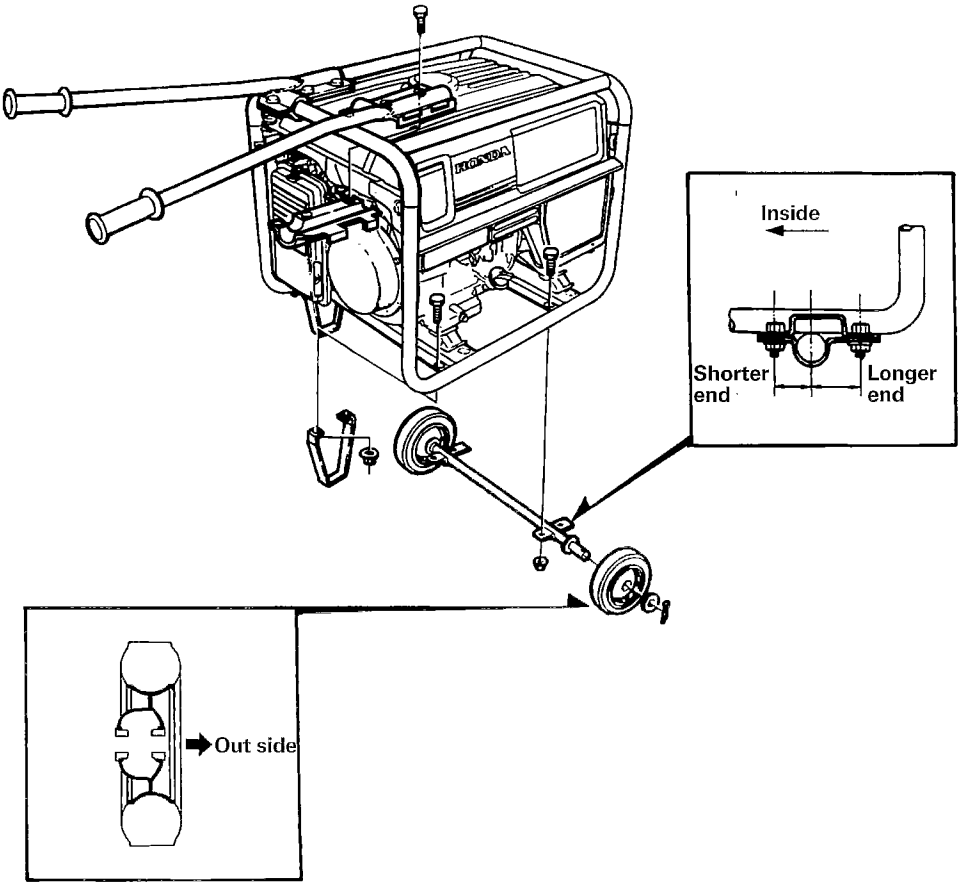

WARRANTY SERVICE INFORMATION

Servicing dealership personnel are trained professionals. They should be able to answer any question you may have. If you encounter a problem that your dealer does not solve to your satisfaction, please discuss it with the dealership's management. The Service Manager or General Manager can help. Almost all problems are solved in this way.

If you are dissatisfied with the decision made by the dealership's management, contact the Honda Power Equipment Customer Relations Office. You can write to:

American Honda Motor Co., Inc.
Power Equipment Division
Customer Relations Office
4900 Marconi Drive
Alpharetta, Georgia 30005-8847

Or telephone: (770) 497-6400

When you write or call, please give us this information:

- Model and serial number (see pages 9 and 10)
- Name of dealer who sold the generator to you
- Name and address of dealer who services your generator
- Date of purchase
- Your name, address, and telephone number
- A detailed description of the problem

COMPONENT IDENTIFICATION 9
CONTENTS 3
CONTROLS 11
- Auto-throttle System 14
- Choke Rod 12
- Circuit Breaker 15
- Circuit Protector 16
- Engine Switch 11
- Fuel Valve Lever 12
- Ground Fault Circuit Interrupter (GFCI) 17
- Ground Terminal 13
- Oil Alert® System 14
- Recoil Starter 11
- Voltage Selector Switch (Dual Voltage System) 13

GENERATOR USE 21
- AC Applications 22
- AC Operation 23
- AC Receptacle Selection 24
- Auto-throttle System 25
- Connections to a Building's Electrical System 21
- Ground System 21
- High Altitude Operation 26
- Special Requirements 21

INSTALLATION OF OPTIONAL PARTS 49
MAINTENANCE 31
- Air Cleaner Service 39
- Air Index 36
- Emission Control System Information 33
- Engine Oil Change 38
- Fuel Sediment Cup Cleaning 40
- Importance of Maintenance 31
- Maintenance Safety 32
- Maintenance Schedule 37
- Spark Arrester Maintenance 42
- Spark Plug Service 41

PRE-OPERATION CHECK 27
Engine Oil 27
Fuel 28
SAFETY 5
Safety Information 7
Safety Label Locations 5
SPECIFICATIONS 48
STARTING THE ENGINE/STOPPING THE ENGINE 30
TRANSPORTING/STORAGE 43
TROUBLESHOOTING 45
WARRANTY SERVICE INFORMATION 52
WIRING DIAGRAM 47

MEMO

MEMO

HONDA

HONDA MOTOR CO., LTD. TOKYO, JAPAN

31ZC2657
00X31-ZC2-6570

EM3 K1 (AH) (英) (Y) (HC) 1000.2000.10
PRINTED IN JAPAN