ARE36/ARE36W/ARE36B/ARE36LP
/ARE36WLP/ARE36BLP

INSTALLATION INSTRUCTIONS

THOR KITCHEN®

ARE MODELS

INSTALLATION INSTRUCTIONS MANUAL

ARE MODELS

ARE36/ARE36W/ARE36B
ARE36LP/ARE36WLP/ARE36BLP

THOR KITCHEN®

TABLE OF CONTENTS

BEFORE YOU BEGIN . . . 3
ANTI-TIP DEVICE . . . 4
IMPORTANT SAFETY INSTRUCTIONS . . . 5
Important safety instructions . . . 4
What you need to know about safety instructions . . . 5
Important safety symbols and precautions . . . 5
What the icons and signs in this user manual mean . . . 5
For your safety . . . 6
Surface cooking units . . . 7
Electrical safety . . . 8
Child safety . . . 8
Oven . . . 9
Ventilating hood . . . 10
Glass/Ceramic cooking surfaces . . . 10
Critical installation warnings . . . 10
PRODUCT DIMENSIONS . . . 13
PREPARING TO INSTALL THE RANGE . . . 14
Minimum dimensions . . . 14
CONNECTING THE POWER . . . 15
KD INSTALLATION PROCEDURES . . . 18
RUBBER PAD INSTALL ON BACK PANEL . . . 20
REMOVING THE OVEN DOOR . . . 21
Removing and replacing the oven door . . . 21
Removing the door . . . 21
Replacing The Door . . . 22
WARRANTY . . . 23

READ THESE INSTRUCTIONS COMPLETELY AND CAREFULLY.

IMPORTANT NOTE TO THE INSTALLER

- Read all instructions contained in these installation instructions before installing the range.
- Remove all packing materials from the oven compartments before connecting the electric supply to the range.
- Observe all governing codes and ordinances.
- Be sure to leave these instructions with the consumer.
- Installation of this appliance requires basic mechanical skills.
- Proper installation is the responsibility of the installer.
- Product failure due to improper installation is not covered under the Warranty.

IMPORTANT NOTE TO THE CONSUMER

- Keep these instructions with your user manual for future reference.
- As when using any appliance generating heat, there are certain safety precautions you should follow.
- Be sure your range is installed and grounded properly by a qualified installer or service technician.
- Make sure the wall coverings around the range withstand the heat generated by the range.
- Cabinet storage space above the surface burners should be a minimum of 30 in. (76.2 cm).

IMPORTANT NOTE TO THE SERVICER

- The electrical diagram is attached to the back of the range.

ANTI-TIP DEVICE

WARNING

To reduce the risk of tipping the range,the range must be secured by a properly installed Anti-Tip device. AFTER THERANGEHAS BEEN INSTALLED,CONFIRM THATTHE ANTI-TIP DEVICE HAS BEEN PROPERLY INSTALLED AND VERIFY THAT THE ANTITIP DEVICE IS PROPERLY ENGAGED.

a) If the anti-tip device is not installed, a child or adult can tip the range and be killed.
b) Verify that the anti-tip device has been properly installed and engaged at therearright
(or rearleft) of the range bottom.
c) If you move the range and then move it back into place, ensure the anti tip device is re-engaged at the right or left rear of the range bottom.
d) Do not operate the range without the anti-tip device in place and engaged.
e) Failure to do so can result in death or serious burns to children or adults.

WARNING

Do not step, lean, or sit on the doors of the range. You can cause the range to tip, resulting in burns or serious injuries.

Confirm that the Anti-Tip device is installed properly. Then, to verify that the Anti-Tip device is engaged, grasp the top rear edge of the range and carefully attempt to tilt it forward. The Anti-Tip device should prevent the range from tilting forward more than a few inches.

If you pull the range out from the wall for any reason, make sure the anti tip device is properly engaged when you push the range back against the wall. If it is not, there is a risk of the range tipping over and causing injury if you or a child stand, sit, or lean on the open door.

Never completely removethe leveling legs. If you remove the leveling legs, the range will not be secured to the anti-tip device properly.

CALIFORNIA PROPOSITION 65 WARNING

CAUTION
Cancer and Reproductive Harm-www.P65Warnings.ca.gov.

Important safety instructions
Read and follow all instructions before using your oven to prevent the risk of fire, electric shock, personal injury, or damage when using the range.This guide does not cover all possible conditions that may occur. Always contact your service agent or manufacturer about problems that you do not understand.

WHAT YOU NEED TO KNOW ABOUT SAFETY INSTRUCTIONS
Warnings and Important Safety Instructions in this manual do not cover all possible conditions and situations that may occur.

It is your responsibility to use common sense, caution, and care when installing, maintaining, and operating your oven.

Important safety symbols and precautions
What the icons and signs in this user manual mean:

WARNING
Hazards or unsafe practices that may result in severe personal injury or death.

CAUTION
Hazards or unsafe practices that may result in minor personal injury or property damage.

CAUTION
To reduce the risk of fire, explosion, electric shock, or personal injury when using you oven, follow these basic safety precautions.

Do **NOT** attempt.
Do **NOT** disassemble.
Do **NOT** touch.
Follow directions explicitly.
Unplug the power plug from the wall socket. Make sure the machine is grounded to prevent electric shock.
Call the service center for help.

NOTE
These warning signs are here to prevent injury to you and others. Please follow them explicitly. After reading this section, keep it in a safe place for future reference.

IMPORTANT SAFETY INSTRUCTIONS

FOR YOUR SAFETY

When using electrical appliances, you should follow basic safety precautions, including the following:

CAUTION
• Use this appliance only for its intended purpose as described in this Owner's Manual.
• Potentially hot surfaces include the cooktop, areas facing the cooktop, oven vent opening, surfaces near the opening, crevices around the oven door.

Be sure your appliance is properly installed and grounded by a qualified technician. User servicing - Do not repair or replace any part of the appliance unless specifically recommended in this manual. All other servicing should be referred to a qualified technician.

Always disconnect the power to the appliance before servicing by removing the fuse or switching off the circuit breaker.

- Do not enter the oven.
- Do not store items of interest to children in cabinets above a range or on the back guard of a range. Children climbing on the range to reach items could be seriously injured
- Do not leave children alone. Never leave children alone or unattended in an area where this appliance is in use. They should never be allowed to sit or stand on any part of the appliance.
- Never use your appliance for warming or heating the room.
- Do not use water on grease fires. Turn off the oven to avoid spreading the flames. Smother the fire or flames by closing the door or use a dry chemical, baking soda, or foam-type extinguisher.
- Avoid scratching or impacting glass doors, cooktops or control panels. Doing so may lead to glass breakage. Do not cook on a product with broken glass. Shock, fire, or cuts may occur.
- Do not lean on the range as you may turn the control knobs inattentively.

Important safety instructions

- Storage in or on the appliance. Do not store flammable materials in the oven or near the surface units. Be sure all packing materials are removed from the appliance before operating it.
- Keep plastics, clothes, and paper away from parts of the appliance that may become hot.
- Wear proper apparel. Never wear loose-fitting or hanging garments while using the appliance.
- Use only dry potholders. Placing moist or damp potholders on hot surfaces may result in burns from steam. Do not let the potholder touch hot heating elements. Do not use a towel or other bulky cloth.
- Teach children not to play with the controls or any other part of the range.
- For your safety, do not use high-pressure water cleaners or steam jet cleaners.
- The appliance is not intended for use by persons (including children) with reduced physical, sensory or mental capabilities, or lack of experience and knowledge, unless they have been given supervision or instruction concerning use of the appliance by a person responsible for their safety.

SURFACE COOKING UNITS

• Never leave surface units unattended at high heat settings. Boilovers cause smoking and greasy spillovers that may ignite.
• Protective Liners – Do not use aluminum foil to line surface unit drip bowls or oven bottoms, except as suggested in the manual. Improper installation of these liners may result in a risk of electric shock or fire.
• To avoid oil spillover and fire, use a minimum amount of oil when shallow pan-frying and avoid cooking frozen foods with excessive amounts of ice.
• Do not operate the cooktop without cookware. If the cooktop operates without cookware, the control knobs will become hot.
• Never use the glass cooktop surface as a cutting board.
• Use care when touching the cooktop. The glass surface of the cooktop will retain heat after the controls have been turned off.
• Be careful when placing spoons or other stirring utensils on the glass cooktop surface when it is in use. They may become hot and could cause burns.
• Use proper pan sizes. This appliance is equipped with surface units of different size. Select pots and pans that have flat bottoms large enough to cover the surface area of the heating element. Using undersized cookware will expose a portion of the heating element to direct contact and may result in the ignition of clothing. Matching the size of the pot or pan to the burner will also improve efficiency.
• Utensil Handles Should Be Turned Inward and Not Extend Over Adjacent Surface Units.
• To reduce the risk of burns, ignition of flammable materials, or spillage due to unintentional contact with utensils, position utensil handles so that they are turned inward and do not extend over adjacent surface units.
• Glazed cooking utensils. Only certain types of glass, glass/ ceramic, ceramic, earthenware, or other glazed cookware can be used for rangetop service without breaking due to sudden changes in temperature.
• Be sure you know which control knob operates each surface unit. Make sure you turned on the correct surface unit.
• Always turn the surface units off before removing cookware.
• When preparing flaming foods under the hood, turn the fan on.
• Keep an eye on foods being fried at high or medium high heat settings.
• Do not store heavy items above the cooktop surface that mcould fall and damage it.
• Do not Use Decorative Surface Element Covers – If an element is accidentally turned on, the decorative cover will become hot and possibly melt. Burns will occur if the hot covers are touched. Damage may also be done to the cooktop.

IMPORTANT SAFETY INSTRUCTIONS

ELECTRICAL SAFETY

- Proper Installation - Be sure your appliance is properly installed and grounded by a qualified technician.
- Flush - mounted appliances may be operated only after they have been installed in cabinets and workplaces that conform to the relevant standards. This ensures that the appliances are installed in compliance with the appropriate safety standards.
- If your appliance malfunctions or if fractures, cracks, or splits appear:
  - switch off all cooking zones
  - unplug the range from the AC wall outlet
  - contact your local service center.

WARNING

If the surface is cracked, switch off and unplug the appliance to avoid the possibility of electrical shock. Do not use your cooktop until the glass surface has been replaced.

WARNING

- Ensure that the appliance is switched off before replacing the lamp to avoid the possibility of electric shock.
- The range should not be placed on a base.

CHILD SAFETY

WARNING

- This appliance is not intended for use by young children or infirm persons without the adequate supervision of a responsible adult.
- Young children should be supervised to ensure that they do not play with the appliance.
- Keep children away from the door when opening or closing it as they may bump themselves on the door or catch their fingers in the door.
- The cooking zones will become hot when you cook. To keep small children from being burned, always keep them away from the appliance while you are cooking.

WARNING

Accessible parts may become hot during use. To avoid burns, young children should be kept away.

OVEN

- **DO NOT TOUCH THE HEATING ELEMENTS OR INTERIOR SURFACES OF THE OVEN**. Heating elements may be hot even though they are dark in color. Interior surfaces of an oven become hot enough to cause burns. During and after use, do not touch or let clothing or other flammable materials contact the heating elements or interior surfaces of the oven until they have had sufficient time to cool. Other surfaces of the appliance may become hot enough to cause burns. Among these surfaces are oven vent openings and surfaces near these openings, the oven door, and the window of the oven door.
- **Do not heat unopened food containers**. The build-up of pressure may cause the container to burst and result in injury.
- **Do not use the oven to dry newspapers**. If overheated, newspapers can catch on fire.
- **Do not use the oven for a storage area**. Items stored in an oven can ignite.
- Use care when opening the door. Let hot air or steam escape before you remove food from or put food into the oven.
- **Protective liners**. Do not use aluminum foil to line the oven bottoms, except as suggested in the manual. Improper installation of these liners may result in a risk of electric shock or fire.
- **Keep oven vent ducts unobstructed**. The oven vent is located above the right rear surface unit. This area could become hot during oven use. Never block this vent or place plastic or heat-sensitive items on it.
- **Placement of oven racks**. Always place oven racks in the desired location while the oven is cool. If the rack must be moved while the oven is hot, use potholders. Do not let the potholders come in contact with the hot heating element in the oven.
- Do not allow aluminum foil or a meat probe to contact the heating elements.
- **During use, the appliance becomes hot**. Care should be taken to avoid touching heating elements inside the oven.
- Do not use harsh abrasive cleaners or sharp metal scrapers to clean the oven door glass. They can scratch the surface which may result in the glass shattering.

CAUTION

Do not attempt to operate the oven during a power failure. If the power fails, alwaysturn the oven off. If the oven is not turned off and the power returns, the oven may begin to operate again. Food left unattended could catch fire or spoil.

IMPORTANT SAFETY INSTRUCTIONS

VENTILATING HOOD

• Clean ventilating hoods frequently. Do not let grease accumulate on the hood or filter.
• When flaming foods under the hood, turn the fan on.

GLASS/CERAMIC COOKING SURFACES

• DO NOT TOUCH SURFACE UNITS OR AREAS NEAR UNITS. Surface unitsmay be hot even though they are dark in color.Areas near surface units may become hot enough to cause burns. During and after use, do not touch, or let clothing or other flammable materials contact the surface units or areas near the units until they have had sufficient time to cool.Among these areas are the cook-top and the facing of the cook-top.
• Do not cook on a broken cooktop. If the cooktop should break, cleaning solutions and spillovers may penetrate the broken cook-top and create a risk of electric shock. Contact a qualified technician immediately.
Clean the cooktop with caution. If a wet sponge or cloth is used to wipe spills on a hot cooking area, be careful to avoid steam burns. Some cleaners can produce noxious fumes if applied to a hot surface.

CRITICAL INSTALLATION WARNINGS

WARNING

• This appliance must be installed by a qualified technician or service company.
- Failing to have a qualified technician install the range may result in electric shock, fire, an explosion, problems with the product, or injury.
• Unpack the oven, remove all packaging material and examine the oven for any damage such as dents on the interior or exterior of the oven, broken door latches, cracks in the door, or a door that is not lined up correctly. If there is any damage, do not operate the oven and notify your dealer immediately.
• Plug the power cord into a properly grounded outlet with the proper configuration. Your oven should be the only item connected to this circuit.
• Keep all packaging materials out of the reach of children. Children may use them for play and injure themselves.
• Install your appliance on a level and hard floor that can support its weight.
- Failing to do so may result in abnormal vibrations, noise, or problems with the product.

- This appliance must be properly grounded.
- Do not ground the appliance to a gas pipe, plastic water pipe, or telephone line.
  - This may result in electric shock, fire, an explosion, or problems with the product
- Do not cut or remove the ground prong from the power cord under any circumstances.
- Connect the oven to a circuit that provides the correct amperage.
- Do not install this appliance in a humid, oily or dusty location, or in a location exposed to direct sunlight or water (rain drops).
  - This may result in electric shock or fire.
- Do not use a damaged power cord or loose wall socket.
  - This may result in electric shock or fire.
- Do not pull or excessively bend the power cord.
- Do not twist or tie the power cord.
- Do not hook the power cord over a metal object, place a heavy object on the power cord, or insert the power cord between objects.
  - This may result in electric shock or fire. If the power cord is damaged, contact your nearest service center.

USAGE CAUTIONS

CAUTION

- If the surface is cracked, turn the appliance off.
  - Failing to do so may result in electric shock.
- Dishes and containers can become hot. Handle with care.
- Hot foods and steam can cause burns. Carefully remove container coverings, directing the steam away your hands and face.
- Remove lids from baby food jars before heating. After heating baby food, stir well to distribute the heat evenly. Always test the temperature by tasting before feeding the baby. The glass jar or the surface of the food may appear to be cooler than the interior, which can be hot enough to burn an infant's mouth.
- Take care as beverages or food may be very hot after heating.
  - Especially when feeding a child. Check that it has cooled sufficiently.
- Take care when heating liquids such as water or other beverages.
  - Make sure to stir during or after cooking.
  - Avoid using a slippery container with a narrow neck.
  - Wait at least 30 seconds after heating before removing the heated liquid.
  - Failing to do so may result in an abrupt overflow of the contents and cause burns.

IMPORTANT SAFETY INSTRUCTIONS

- Do not stand on top of the appliance or place objects (such as laundry, oven cover, lighted candles, lighted cigarettes, dishes, chemicals, metal objects, etc.) on the appliance.
  - Items, such as a cloth, may get caught in the door.
  - This may result in electric shock, fire, problems with the product, or injury.
- Do not operate the appliance with wet hands.
  - This may result in electric shock.
- Do not spray volatile substances such as insecticide onto the surface of the appliance.
  - As well as being harmful to humans, it may also result in electric shock, fire, or problems with the product.
- Do not put your face or body close to the appliance while cooking or when opening the door just after cooking.
  - Take care that children do not come too close to the appliance.
  - Failing to do so may result in children burning themselves.
- Do not place food or heavy objects over the edge of the oven door.
  - If you open the door, the food or object may fall and this may result in burns or injury.
- Do not abruptly cool the door, the inside of the appliance, or a dish by pouring water over it during or just after cooking.
  - This may result in damage to the appliance. The steam or water spray may result in burns or injury.
- Do not operate while empty except for self-cleaning.
- Do not defrost frozen beverages in narrow-necked bottles. The bottles can break.
- Do not scratch the glass of the oven door with a sharp object.
  - This may result in the glass being damaged or broken.
- Do not store anything directly on top of the appliance when it is in operation.
- Do not use sealed containers. Remove seals and lids before cooking. Sealed containers can explode due to the build up of pressure even after the oven has been turned off.
- Take care that food you are cooking in the oven does not come into contact with the heating element.
  - This may result in fire.
- Do not over-heat food.
  - Overheating food may result in fire.

PRODUCT DIMENSIONS

30" Electric Range

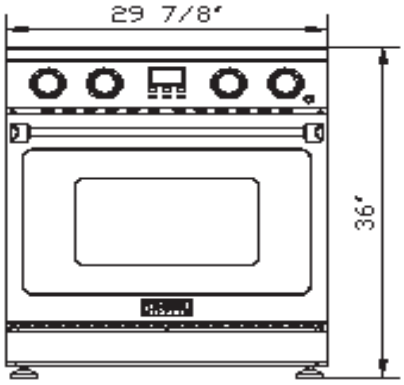

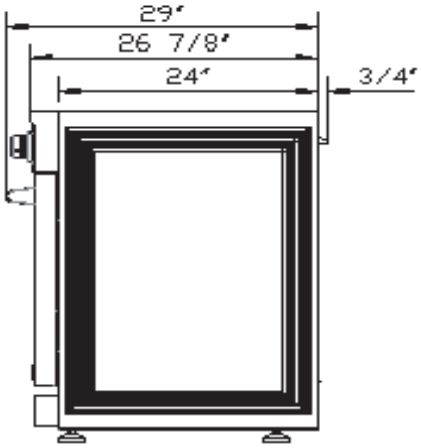

36" Electric Range

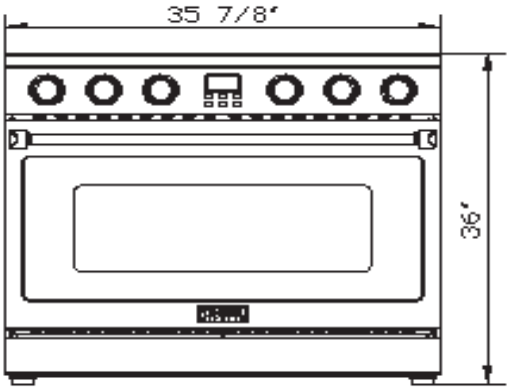

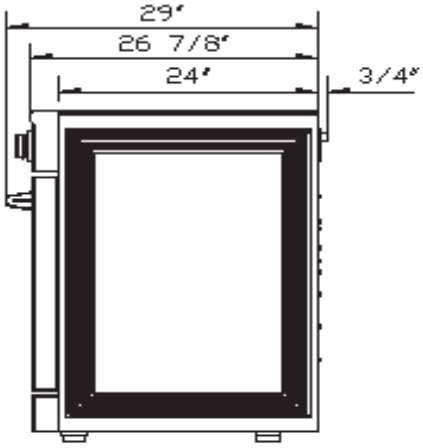

CHECKING THE INSTALLATION SITE

Clearances and dimensions

To install the range, refer to the following figure.
For installation in CANADA, a Free-standing range is not to be installed closer than 12mm from any adjacent surface.

CAUTION

This range has been designed to comply with the maximum allowable wood cabinet temperatures of 194°F. Makesurethewall covering,countertops and cabinetsaround the range can withstand the heat (up to 194 °F) generated by the range. If not, discoloration, delamination or melting may occur.

Minimum dimensions

IMPORTANT

To eliminate the risk of burns or fire caused by reaching over heated surface units, cabinet storage space located above the surface units should be avoided. If cabinet storage is to be provided, the risk can be reduced by installing a range hood that projects horizontally a minimum of 5" beyond the bottom of the cabinets.

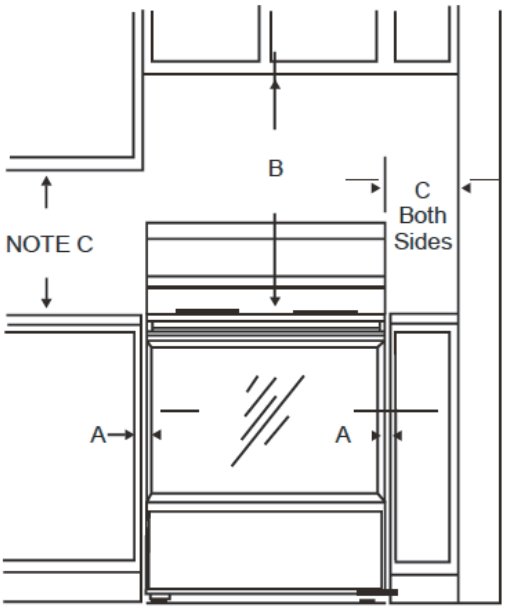

MINIMUM DIMENSIONS BETWEEN COOKTOP, WALLS AND ABOVE THE COOKTOP:

A: Make sure the wall covering, countertop, flooring and cabinets around the range can withstand the heat (up to 200°F) generated by the range.

B: Allow 30" minimum clearance between surface units and bottom of unprotected wood or metal cabinet, or allow a 24" minimum when bottom of wood or metal cabinet is protected by no less than 1/4" thick flame retardant millboard covered with not less than No 28 MSG sheet metal, (.015"), .015" thick stainless steel, .024" aluminum or .020" copper.

C: This appliance has been approved for 0" spacing to adjacent surfaces above the cooktop. However, a 6" minimum spacing to surfaces less than 15" above the cooktop and adjacent cabinet is recommended to reduce exposure to steam, grease splatter and heat.
To reduce the risk of burns or fire when reaching over hot surface elements, cabinet storage space above the cooktop should be avoided. If cabinet storage space is to be provided above the cooktop, the risk can be reduced by installing a range hood that projects at least 5" beyond the front of the cabinets. Cabinets installed above the cooktop must be no deeper than 16".

D: Allow 24"/30"/36" (depensing on your range width) minimun clearance between right and left cabinets.

CONNECTING THE POWER

STEP 1. MEETING ELECTRICAL CONNECTION REQUIREMENTS

CAUTION

For personal safety, do not use an extension cord with this appliance.
Remove house fuse or open circuit breaker before beginning installation.
This appliance must be supplied with the proper voltage and frequency, and connected to an individual properly grounded branch circuit, protected by a circuit breaker or fuse having amperage as specified on the rating plate. The rating plate is located on the right of oven door.
We recommend you have the electrical wiring and hookup of your range connected by a qualified electrician. After installation, have the electrician show you where your main range disconnect is located.
Check with your local utilities for electrical codes which apply in your area.
Failure to wire your oven according to governing codes could result in a hazardous condition. If there are no local codes, your range must be wired and fused to meet the requirements of the National Electrical Code, ANSI/NFPA No.70–Latest Edition.
Effective January 1,1996, the National Electrical Codere quires that new construction (not existing) utilize a 4-conductor connection to an electric range.
When installing an electric range in new construction, follow Steps for 4-wire connection.
You must use a 3-wire or 4-wire, single-phase A.C. 208Y/120 Volt or 240/120 Volt, 60 hertz electrical system.
If the electrical service provided does not meet the above specifications, have a licensed electrician install an approved outlet.
Use only a 3-conductor or a 4-conductor UL-listed range cord. These cords maybe provided with ring terminals on wire and a strain relief device.
A range cord rated at 40 amps with 125/250 minimum volt range is required. A 50 amp range cord is not recommended but if used, it should be marked for use with no minal 13⁄8" diameter connection openings. Care should be taken to center the cable and strain relief within the knock out hole to keep the edge from damaging the cable.

NOTE

This appliance is manufactured ready to be installed with a 4-wire cord set.

STEP 2. POWER CORD

1. Remove the rear terminal block cover and loosen the 6 screws with a screwdriver. The terminal block will then be accessible. Do not discard these screws.

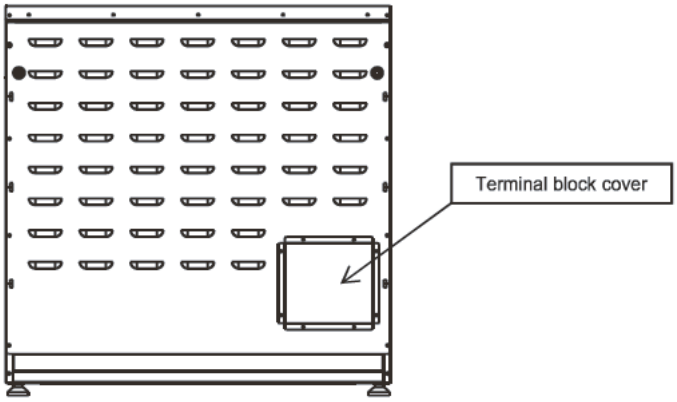

2. For power cord installations only, hook the strain relief over the power cord hole located below the rear of the drawer body. Insert the power cord through the strain relief and tighten the device.

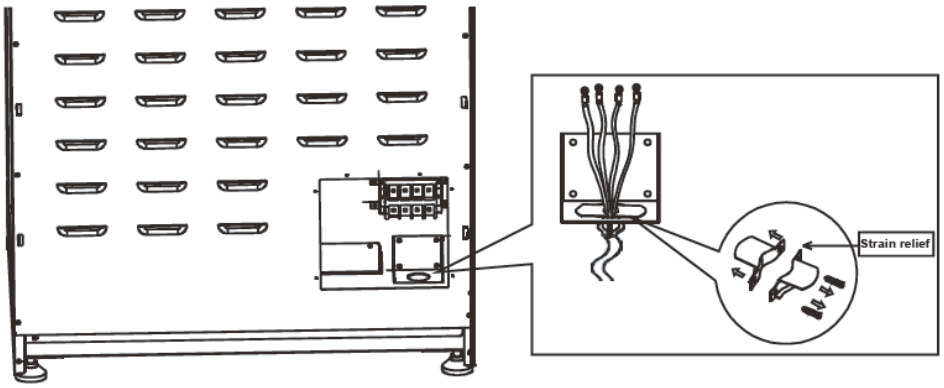

- You must install the power cord with a strain relief.
- Attach the strain relief to the opening in conduit connection plate.

STEP 3. 4-WIRE POWER CORD INSTALLATION

WARNING

Electrical Shock Hazard
Electrical ground is required on this appliance.
Do not connect to the electrical supply until appliance is permanently grounded.
Disconnect power to the circuit breaker or fuse box before making the electrical connection.

This appliance must be connected to a grounded, metallic, permanent wiring system, or a grounding connector should be connected to the grounding terminal or wire lead on the appliance. Failure to do any of the above could result in a fire, personal injury or electrical shock. See below for more information on electrical grounding.

A. Remove the 4 lower terminal screws from the terminal block.
B. Insert the 4 terminal screws through each power cord terminal and into the lower terminals of the terminal block. Be certain that match the wire and terminals by color.
C. Tighten screws securely into the terminal block.

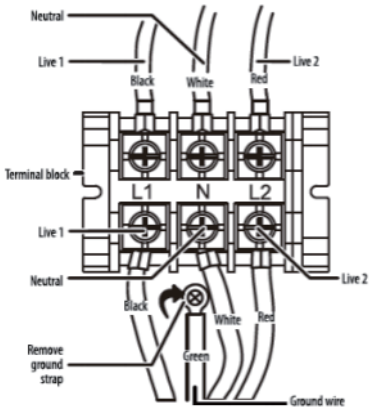

CAUTION
You must check voltage after connecting power cord.

Live 1 - Neutral	120 V
Live 2 - Neutral	120 V
Live 2 - Live 2	208 V / 240 V

CONNECTING THE POWER

STEP 4 3-wire power cord

WARNING

Electrical Shock Hazard
Electrical ground is required on this appliance.
Do not connect to the electrical supply until appliance is permanently grounded.
Disconnect power to the circuit breaker or fuse box before making the electrical connection.

This appliance must be connected to a grounded, metallic, permanent wiring system, or a grounding connector should be connected to the grounding terminal or wire lead on the appliance. Failure to do any of the above could result in a fire, personal injury or electrical shock. See below for more information on electrical grounding.

A. Remove the 4 lower terminal screws from the terminal block.
B. Insert the Green ground terminals together with white one.
C. Insert the 3 terminal screws through each power cord terminal and into the lower terminals of the terminal block. Be certain that match the wire and terminals by color.
D. Tighten screws securely into the terminal block.

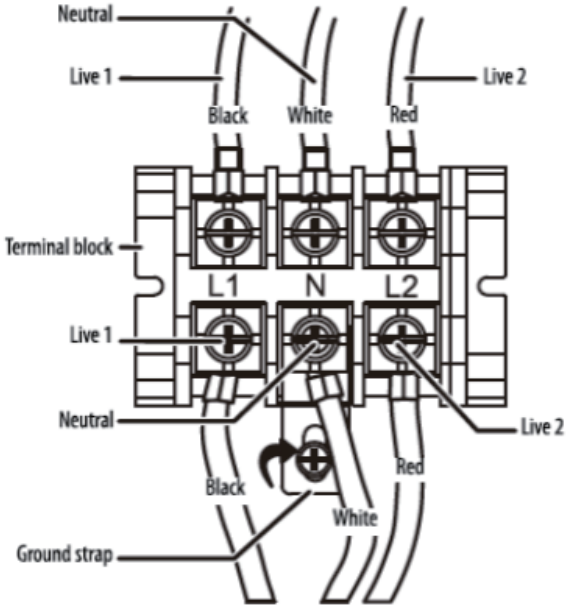

CAUTION

You must check voltage after connecting power cord.

Live 1 - Neutral	120 V
Live 2 - Neutral	120 V
Live 2 - Live 2	208 V / 240 V

STEP 5. REPLACING THE TERMINAL BLOCK COVER
Replace the terminal block cover on the range back and tighten the screw.

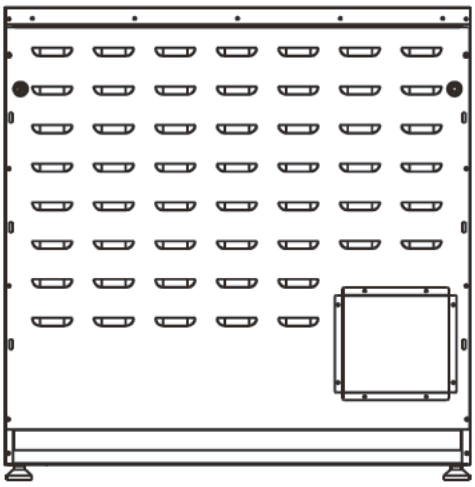

KD INSTALLATION PROCEDURES

Your Thor Kitchen range might have a KD Knob + handle design that need to be installed. Please Follow up the following procedures for Knob + Oven door handle installation.

1. Check the knobs

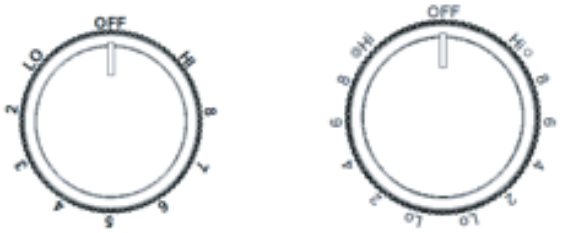

2. See the sheet for the number of each knobs

Model#	Dual Burner Knob	Single Burner Knob
36"	2	3
30"	1	3

*For any parts damage or missing, please contact 877-288-809, or send email to info@thorgroup.us

3. Find the right knobs for each shaft on the range. Push the knob in to fully attach the shaftand make sure there's no friction between knobs and bezels.

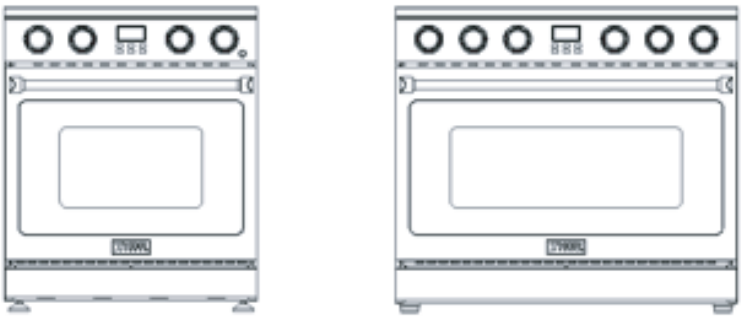

Your Thor range might have a KD handle that needs to be installed. Please Follow up the following procedures for the oven door handle installation

1. Check your Installation Kits for Door Handles

2 * Handle Holders, 1 * Installation Wrench,
1 * Handle (For 24", 30" or 36" Oven)

2. Connect door handle holders to each side of the handle

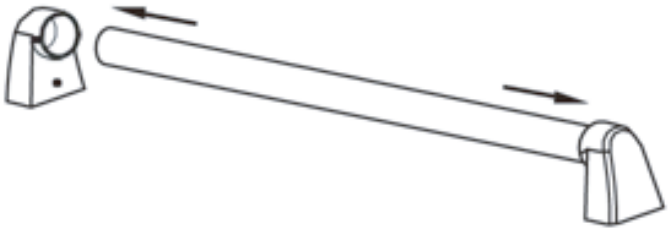

KD INSTALLATION PROCEDURES

3. Secure the oven handle with two screws on each door handle holder (if not, handle might be loose)

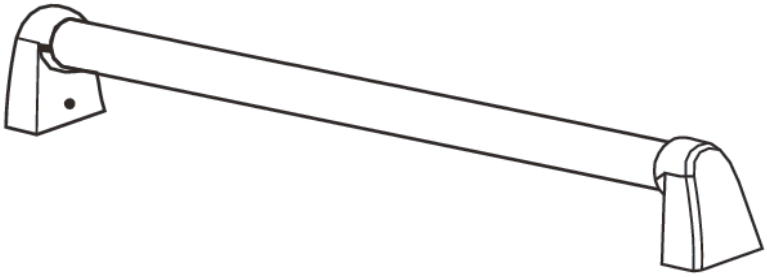

4. Secure the oven handle with two screws on each door handle holder (if not, handle might be loose)

5. Lay the door handle against to the oven door and fit it on the connection part, and use the wrench to get the door handle holder tight;

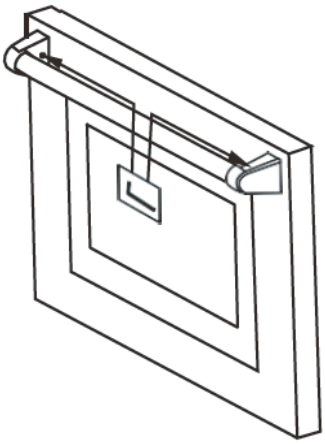

6. Use the wrench to tighten the door handle holders.

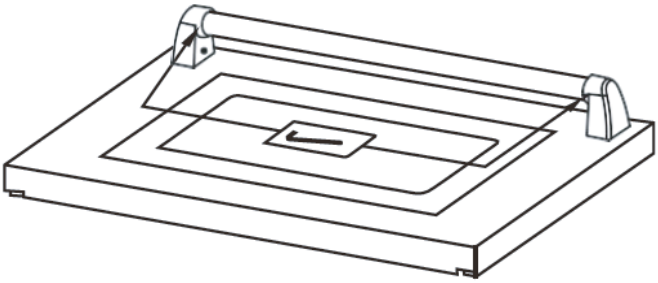

RUBBER PAD INSTALL ON BACK PANEL

To Prevent the range too close to the wall, there are 2 plastic pads offered with the user's manual, please find the accessories and follow the below steps:

1. check the installation kit packed with manual.

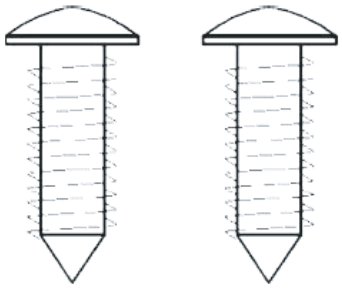

2 pcs screws

2 pcs rubber pad

2. Install 2 pcs rubber pad as showed above.

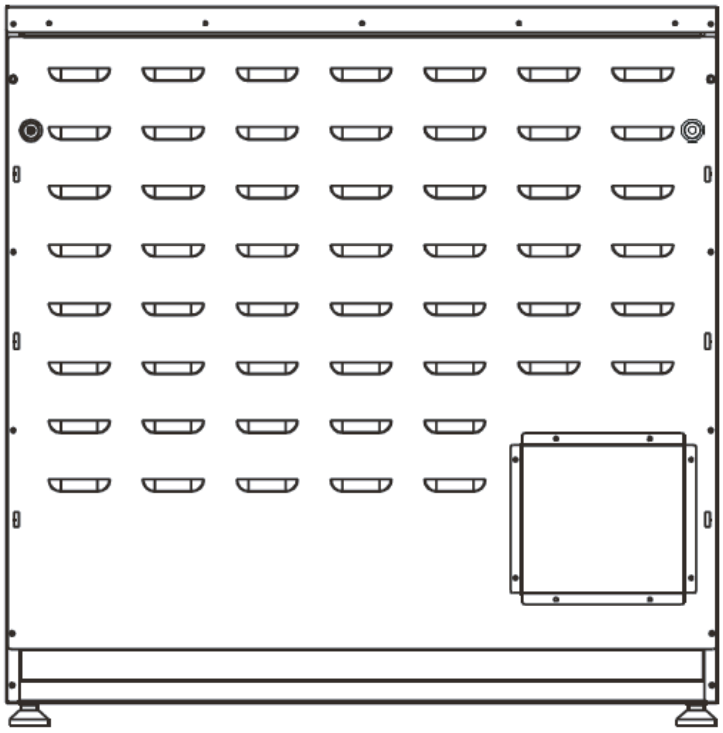

REMOVING THE OVEN DOOR

Removing and replacing the oven door

Do not lift the oven door by its handle.Doing so may damage the door.
Make sure the oven and the door are cool before you begin to remove the door.

IMPORTANT

Before removing the door,make sure there is a large enough clear,protected surface in the kitchen to rest the door on.
The oven door is heavy!

Removing the oven door

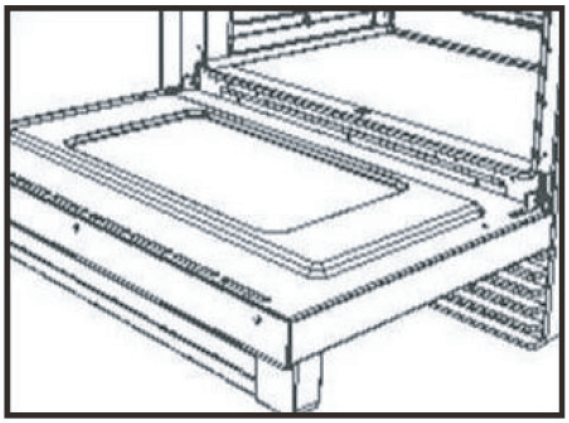

1.Open the door very care fully.

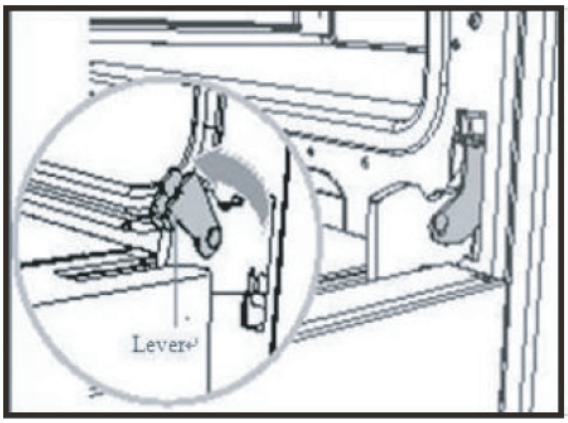

2.Open the levers fully on both sides.

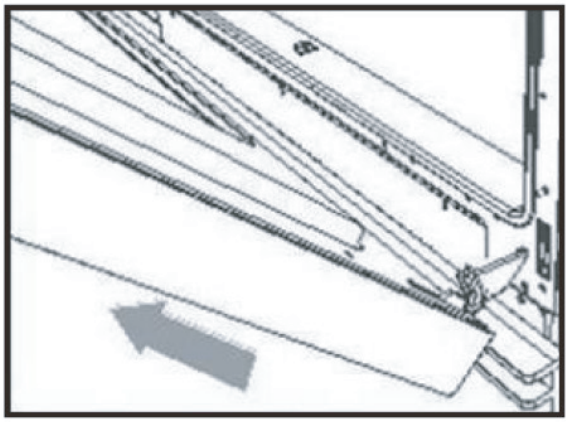

3.Holding the door firmly on both sides

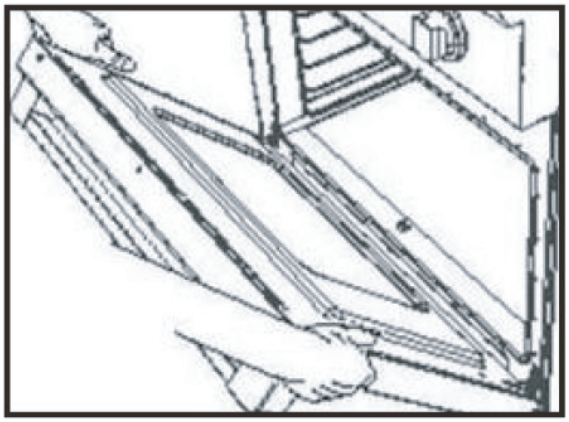

4.Disengage the hinges and remove the gently close it about halfway, door, place on a protected surface.

Replacing the oven door

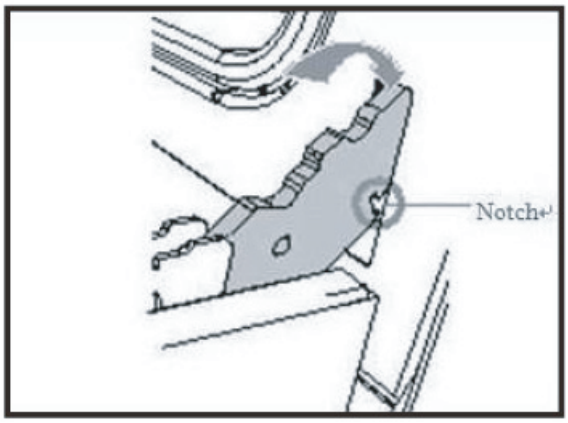

1.Hold the door firmly in an approximately open position.

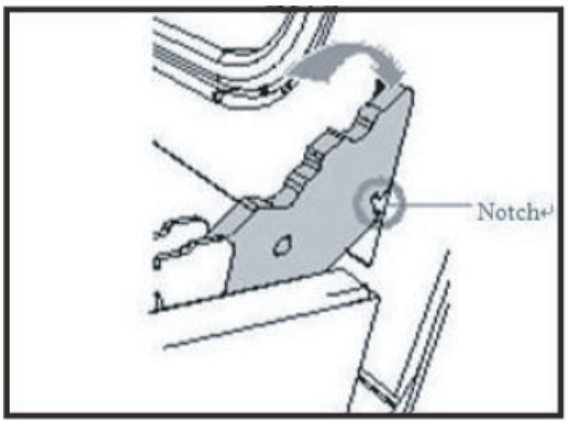

2.Insert the hinge tongues into the slots making sure that the notches on both sides drop into place as shown.

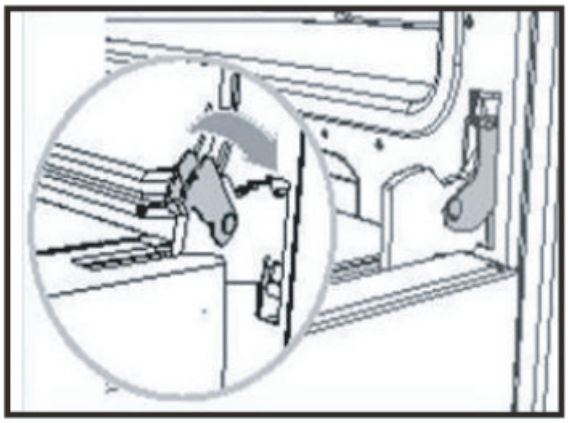

3.Open the door fully as shown.

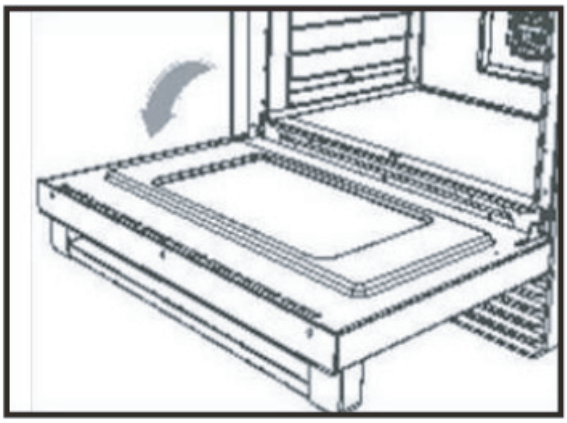

4. Fully close the levers on the left and right hinges, as shown, then close the door.

WARRANTY

THOR KITCHEN®

Warranty&Service

This appliance has been manufactured by Thor International, 4651 E Airport Drive, California 91761

For Customer Service, please call (877) 288 - 8099

For the most up to date warranty and service policy, please refer to our website

WWW.THORKITCHEN.COM/WARRANTY-REGISTRATION

For in-warranty service requests, please visit our website at

WWW.THORKITCHEN.COM/SERVICE

Please Note: You must provide proof of purchase or installation date for any in-warranty service requests

WELCOME TO THE CLUB

You chose THOR Kitchen to enhance your culinary journey and we're stoked to have you in the club. Think of it as a secret society of really savvy people, such as yourself, choosing professional power and performance at an affordable price.

Register your product by following the steps below.

WARRANTY REGISTRATION

01 Scan theQR code or visit **thorkitchen.com/warranty**

02 Input your product info and select register

03 You're done. Let's get cookin'.

WARRANTY

NEED PARTS?