# GET IN TOUCH?

support@meowanthome.com

**MANUFACTURER**
Shenzhen Guiyang Network Technology Co., Ltd

**ADDRESS**
1404K3, East Block, Shengtang Commercial Building,
Futian District, Shenzhen, China

Made In China

Rev_1.1_EN

Meowant

# CAT WATER FOUNTAIN

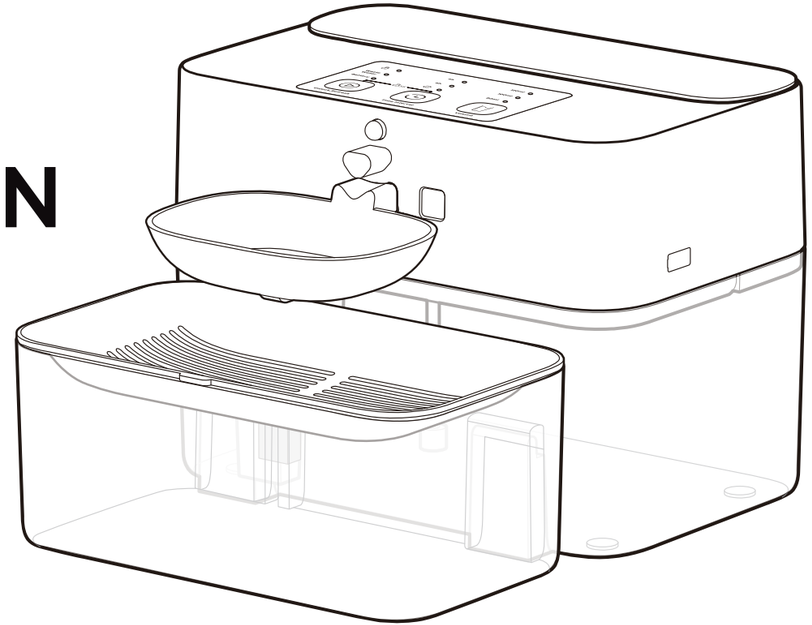

## User Manual

Model: MW-DF03

# CONTENT


01 01-02
**IMPORTANT SAFETY INSTRUCTIONS**

Safety Instructions 01
Specifications 02

02 03-05
**EXPLORING WATER FOUNTAIN**

In the Box 03
Control Function 04
Status Indicators 05

03 06-08
**USING WATER FOUNTAIN**

04 09
**CARE AND MAINTENANCE**

05 10-11
**TROUBLE-SHOOTING GUIDE**

# IMPORTANT SAFETY INSTRUCTIONS

**WARNING**

## READ ALL INSTRUCTIONS BEFORE USE AND SAVE FOR FUTURE REFERENCE

When using an electrical appliance, especially when children are present, basic safety precautions should always be followed, including the following:

## INTENDED USE

- This appliance is not intended for use by persons (including children) with reduced physical, sensory or mental capabilities, or lack of experience and knowledge, unless they have been given supervision or instruction concerning the use of the appliance by person responsible for their safety.
- **DO NOT** allow to be used as a toy. Close attention is necessary when used by or near children and pets. Children and pets should be supervised to ensure that they do not play with the appliance. Keep the appliance and all accessories out of reach of children.
- **DO NOT** use for young pets under 3 months old or those with physical disabilities, unless supervised.
- For indoor use only. Use the appliance only for intended household purposes as described in this User Manual.

## ELECTRICITY SAFETY

- **DO NOT** operate any appliance with a damaged cord, or if it malfunctions, is dropped or damaged in any manner.
- **DO NOT** immerse the main unit, or power cord in water or other liquid or allow moisture to come into contact with these parts.
- **DO NOT** touch or operate the control panel with wet hands.
- **DO NOT** submerge or expose the electrical components to water or cleaning solutions.
- Always turn off when not in use, before putting on or taking off parts and before cleaning, maintenance or servicing.
- To reduce the risk of electric shock, do not place or store an appliance where it can fall or be pulled into a tub or sink.

## RELATED TO USE

- Always place and use on a firm, level surface against wall or in a corner to avoid tripping. Avoid soft, uneven, or unstable flooring.
- Keep indoors in a cool, dry location. Reduce exposure to high temperature and humidity.
- **DO NOT** use the water fountain without water. Do not fill it with any other liquids.
- **DO NOT** place any foreign object in the water tank. Do not use with water that is micro-biologically unsafe or of unknown quality.
- **DO NOT** sit on or place anything on top of the fountain.
- **DO NOT** allow pets to chew on or swallow any parts. Cover or hide the power cord with care to prevent pets from biting.
- **DO NOT** allow anything to rest on the power cord. Do not plug in cord in an area where people or animals may walk or trip on cord.
- **DO NOT** lift the water fountain with waste water tank. Remove the waste water tank and hold the fresh water tank with both hands, while keeping in upright position.
- **DO NOT** use accessories or attachments that are not recommended by the manufacturer.
- **DO NOT** attempt to disassemble, repair, modify or replace any part of the water fountain. No user serviceable parts inside. All servicing should be performed by qualified personnel only.
- The sensitivity and detection range of the motion sensor vary with room temperature: the lower the temperature, the higher the sensitivity and the longer the range; the higher the temperature, the lower the sensitivity and the shorter the range.
- Always unplug and turn off the fountain before cleaning, making any repairs or servicing, or whenever not in use.
- Dispose of all packaging materials properly. Keep away from children and pets. Keep plastic bags away from babies and small children. Do not use in cribs, beds, carriages or play pens.

# FOR HOUSEHOLD USE ONLY
# READ AND SAVE THESE INSTRUCTIONS

## Specifications

| | |
|---|---|
| **Input** | 5V ⎓ 1A |
| **Battery Capacity** | 2500mAh |
| **Fresh water Tank Capacity** | 1.2gal / 4.5L |
| **Waste water Tank Capacity** | 0.6gal / 2.1L |

# EXPLORING WATER FOUNTAIN

## In the Box

Check if all parts and accessories are included. Contact us via **email: support@meowanthome.com** if there is any part missing or damaged.

### Other Accessories

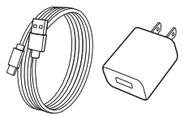

Charging Cable x1
Power Adapter x1




User Manual x 1

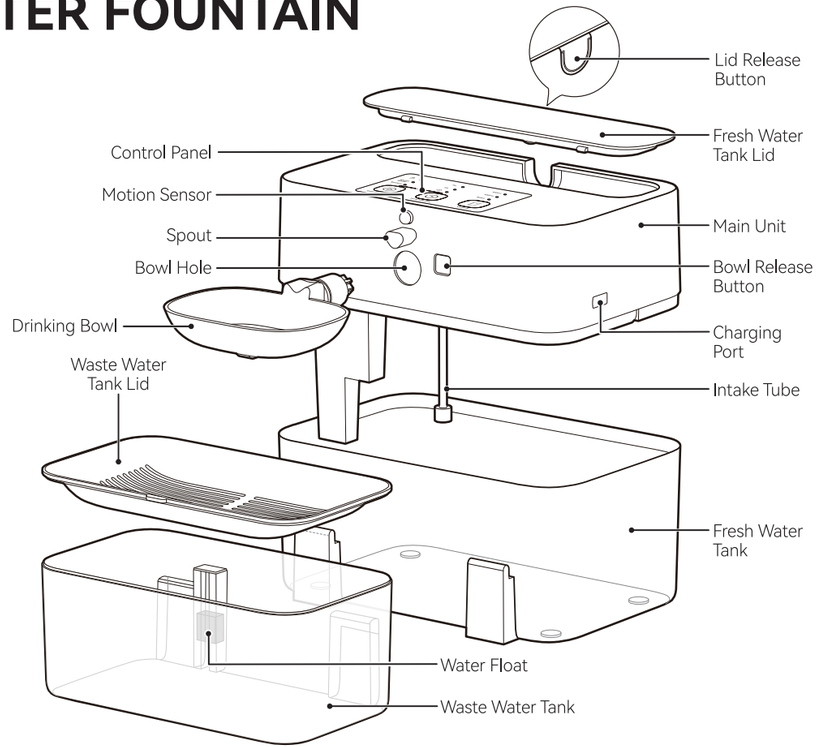


## Control Function

**Power ON / OFF**
Press and hold for 2 seconds to turn the fountain on or off.

**Refresh Bowl**
With fountain on, press once to manually drain the used water and refill with fresh water.

**Refresh Interval**
Press repeatedly to cycle through 3 refresh intervals: 4h -> 6h -> Sensor mode -> 4h ->...

- **4H timed refresh:** Refresh bowl water every 4 hours.
- **6H timed refresh:** Refresh bowl water every 6 hours.
- **Sensor mode:** Refresh bowl water 15 minutes after your cat drinks. If no drinking is detected within 12 hours, it refreshes automatically after 12 hours.

**Child Lock**
Child lock activates automatically after 2 minutes of inactivity. **Always unlock before any operation.**
To unlock, press and hold both buttons simultaneously for 3 seconds.

**Water Volume**
Press repeatedly to cycle through 3 volumes: 120ml -> 100ml -> 80ml -> 120ml ->...

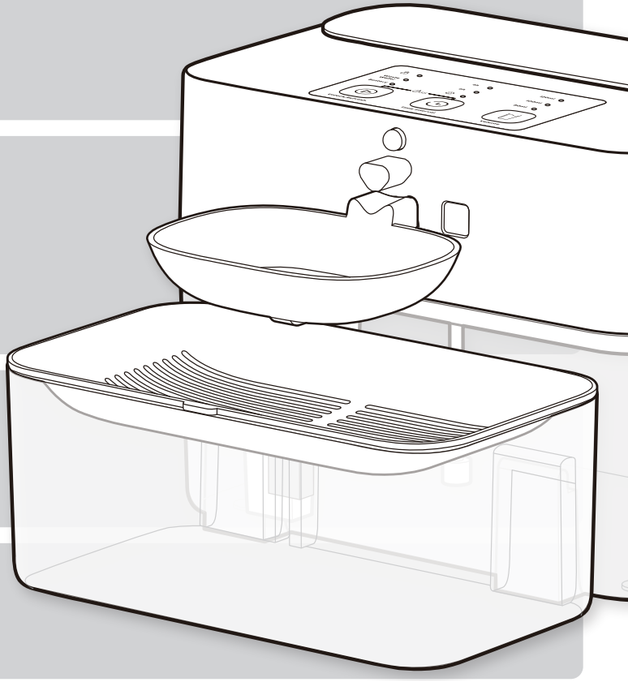

## Status Indicators

**Solid ON Red**
Child lock on

**Waste Water**
**Solid ON Red**
Waste water tank full

**Battery**
**Solid ON Red**
Battery low

**Breathing White**
Charging

**Solid ON White**
Fully charged

**4h** **4H Timed Refresh**

**6h** **6H Timed Refresh**

**Solid ON**
Sensor mode on

**Flashing**
Licking detected. Water will refresh in 15 minutes

**120ml** **120ml**

**100ml** **100ml**

**80ml** **80ml**

120ml
100ml
80ml
**Breathing White**
Refreshing Water

**Child lock activates automatically after 2 minutes of inactivity. Always unlock before any operation.**

# USING WATER FOUNTAIN

- Make sure that the bowl and waste water tank are properly installed in place before use.
- We highly recommend that you fully charge the water fountain with the included adapter and charging cable before first use.
- Clean and rinse the water fountain before first use. Refer to section “Care and Cleaning” for details.

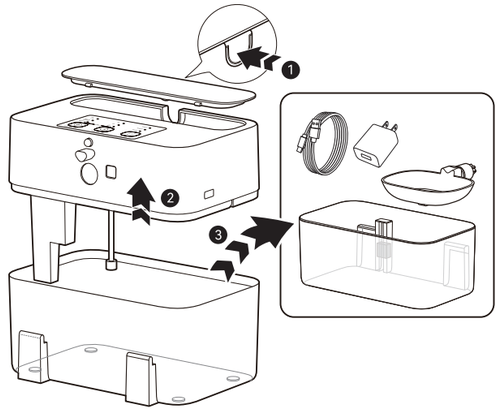


Press the release button to remove the lid, reach inside to remove the main unit, and then take out the waste water tank, bowl, adapter, and charging cable.

1

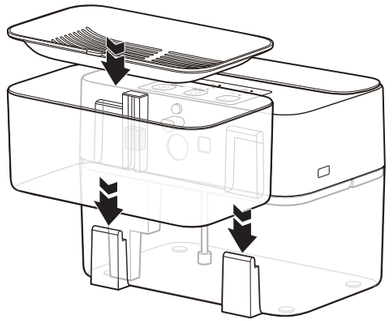

Place the fountain indoors on a firm, level surface. Snap the waste water tank into place.

2

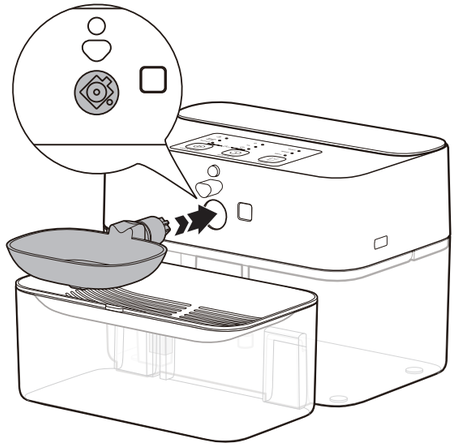

Align the axle at the end of the bowl with the groove inside the hole, then insert the bowl fully into the hole.

3

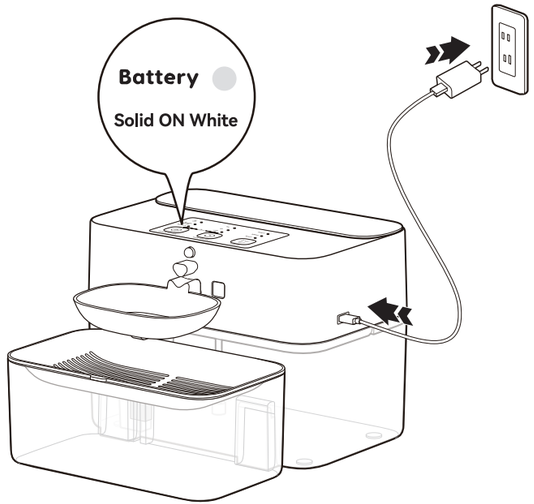


Connect the fountain to the outlet with the included power adapter and charging cable.

4

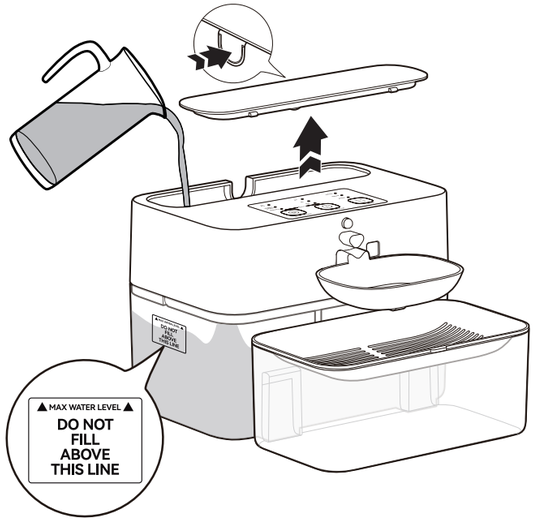


Press the release button to remove the lid, fill the fresh water tank with purified water below the **Max** fill line.

5

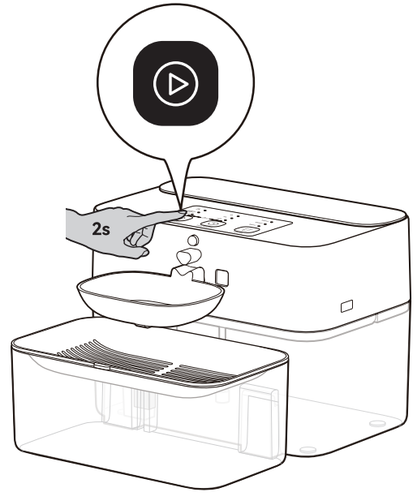


Press and hold ⏻ for 2 seconds to turn the fountain on. After automatic reset, adjust the refresh mode or volume if desired.

6

# CARE AND CLEANING

- DO NOT rinse or immerse the main unit in water or other liquids.
- We recommend that you clean the fresh water tank every 30 days. For the waste water tank, empty the tank when it is full and clean with a neutral detergent as needed.
- DO NOT clean the drinking bowl or tank in a dishwasher, or use water above 60°C.

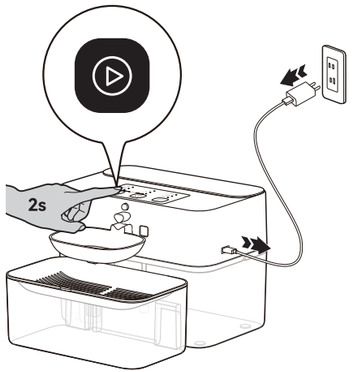


Press and hold ⏻ for 2 seconds to turn the fountain off. Unplug it from the outlet.

* Do not rinse or immerse the base in water.

1

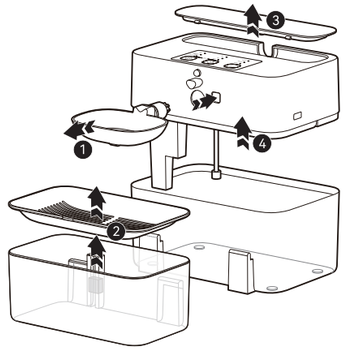


Press the release button to remove the bowl and lid. Take the waste water tank and fresh water tank apart.

2



Rinse clean the drinking bowl, lid, fresh water tank and waste water tank.

3

# TROUBLESHOOTING GUIDE

The troubleshooting guide addresses the most common problems. If problems persist, feel free to contact the Customer Support via **email: support@meowanthome.com**

| Problem | Solution |
|---|---|
| Fountain does not dispense water. | • Check if the battery is low. Fully charge the fountain with the included adapter and charging cable before use.<br>• Check if the fresh water tank is empty. Fill the tank with purified water below the Max fill line.<br>• Check if the waste water tank is full. Empty the tank if necessary.<br>• Press ⏻ once to manually refresh the bowl. 5 seconds after the bowl resets, wave your hand in front of the fountain to trigger water dispensing.<br>• Check if child lock is turned on. The fountain automatically locks if no operation is done for 2 minutes. Hold ⏻ and ⏲ simultaneously for 3 seconds to unlock before using the control panel.<br>• Try restarting the fountain by holding ⏻ to turn it off and back on. |
| How long does the fountain last on a full charge? | Battery life varies depending on the refresh mode and water volume per cycle. Lab test results for one cat: |

| Mode + Volume | Battery Low | Battery Empty |
|---|---|---|
| 4H + 80ml | 16 days | 18 days |
| 6H + 80ml | 16 days | 19 days |
| Sensor Mode + 80ml | 12 days | 13 days |

| Problem | Solution |
| --- | --- |
| Reduced flow rate. | • Check if the spout is clogged with scale or grime. Remove the silicone cover and clean the spout when necessary.<br>• Check if the battery is low. Fully charge the fountain. |
| How often should I clean the fountain? | • We recommend that you clean the fresh water tank every 30 days. For the waste water tank, empty the tank when it is full and clean with a neutral detergent as needed.<br>• Do not clean the drinking bowl or tank in a dishwasher, or use water above 60°C. |
| Strange noises when running. | Air bubbles may trap in the water pump, which can affect water flow and create unusual sounds. Try restarting the fountain to let the pump run again and flush out the air bubbles. |
| Fail to turn on, turn off or refresh water. | Check if child lock is turned on. The fountain automatically locks if no operation is done for 2 minutes. Hold and simultaneously for 3 seconds to unlock before using the control panel. |

## FCC Compliance

This device complies with Part 15 of the FCC Rules. Operation is subject to the following two conditions:
(1) this device may not cause harmful interference, and
(2) this device must accept any interference received, including interference that may cause undesired operation.

Correct Disposal of This Product (Waste Electrical & Electronic Equipment)
(Applicable in countries with separate collection systems)

This marking on the product, accessories or literature indicates that the product and its electronic accessories should not be disposed of with other household waste at the end of their working life. To prevent possible harm to the environment or human health from uncontrolled waste disposal, please separate these items from other types of waste and recycle them responsibly to promote the sustainable reuse of material resources. Household users should contact either the retailer where they purchased this product, or their local government office, for details of where and how they can take these items for environmentally safe recycling. Business users should contact their supplier and check the terms and conditions of the purchase contract. This product and its electronic accessories should not be mixed with other commercial wastes for disposal.