PR-D19

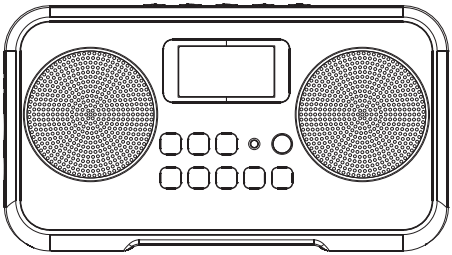

GB

Version 1

Important safety instructions

1. Read these instructions.

2. Keep these instructions.

3. Heed all warnings.

4. Follow all instructions.

5. Do not use this apparatus near water.

6. Clean only with dry cloth.

7. Do not block any ventilation openings. Install in accordance with the manufacturer's instructions.

8. Do not install near any heat sources such as radiators, heat registers, stoves, or other apparatus (including amplifiers) that produce heat.

9. Do not defeat the safety purpose of the polarized or grounding-type plug. A polarized plug has two blades with one wider than the other. A grounding type plug has two blades and a third grounding prong. The wide blade or the third prong are provided for your safety. If the provided plug does not fit into your outlet. Consult an electrician for replacement of the obsolete outlet.

10. Protect the power cord from being walked on or pinched particularly at plugs, convenience receptacles, and the point where they exit from the apparatus.

11. Only use attachments/accessories specified by the manufacturer.

12. Use only with the cart, stand, tripod, bracket, or table specified by the manufacturer, or sold with the apparatus. When a cart is used, use caution when moving the cart/apparatus combination to avoid injury from tip-over.

13. Unplug this apparatus during lightning storms or when unused for long periods of time.

14. Refer all servicing to qualified service personnel. Servicing is required when the apparatus has been damaged in any way, such as power-supply cord or plug is damaged. liquid has been spilled or objects have fallen into the apparatus, the apparatus has been exposed to rain or moisture, does not operate normally, or has been dropped.

15. To Reduce the Risk of Fire or Electric Shock, Do not Expose This Appliance To Rain or Moisture.

16. The Shock Hazard Marking and Associated Graphical Symbol is provided on the rear of unit.

17. Apparatus shall not be exposed to dripping or splashing and no objects filled with liquids, shall be placed on the apparatus.

18. Excessive sound pressure on ear- and headphones could impair the hearing ability. Higher setting that idle on the equalizer leads to higher signal voltages on the output for ear and headphones.

19. The power plug should be close to the radio, and easy to be approached that during the emergency, to disconnect the power from the radio, just unplug the power plug from the AC power slot.

20. Where the MAINS plug or an appliance coupler is used as the disconnect device, the disconnected device shall remain readily operable.

FCC INFORMATION

The Federal Communication Commission Radio Frequency Interference Statement includes the following paragraph:

The equipment has been tested and found to comply with the limits for a Class B Digital Device, pursuant to part 15 of the FCC Rules. These limits are designed to provide reasonable protection against harmful interference in a residential installation.This equipment generates, uses and can radiate radio frequency energy and, if not installed and used in accordance with the instruction, may cause harmful interference to radio communication. However, there is no grantee that interference will not occur in a particular installation. If this equipment dose cause harmful interference to radio or television reception, which can be determined by turning the equipment off and on, the user is encouraged to try to correct the interference by one or more of the following measures:

-- Reorient or relocate the receiving antenna.

-- Increase the separation between the equipment and receiver.

-- Connect the equipment into an outlet on a circuit different from that to which the receiver is connected.

-- Consult the dealer or an experienced radio/TV technician for help.

Cautions to the user

Notice:

The changes or modifications not expressly approved by the party responsible for compliance could voidthe user's authority to operate the equipment.

CAUTION:

To reduce the risk of the electric shock, do notm perform any servicing other than that contained in the operating instructions unless you are qualified to do so.

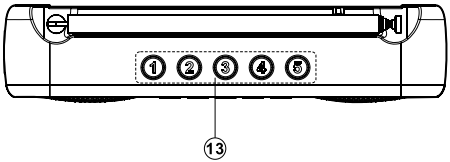
1
2
3
4
5
13

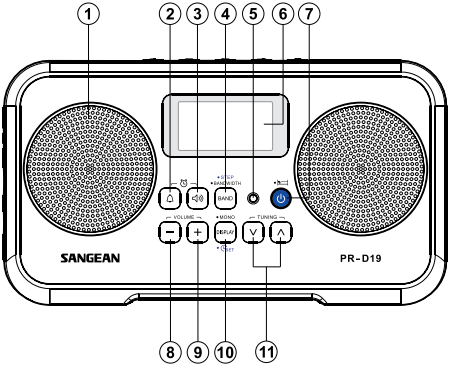
1
2
3
4
5
6
7
STEP
BAND WIDTH
BAND
VOLUME
MONO
TUNING
DEFLAT
SANGEAN
PR-D19
8
9
10
11

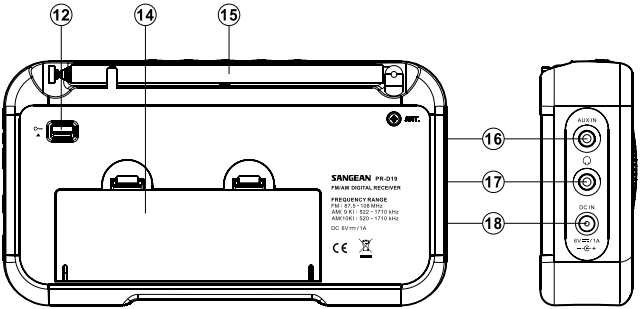
12
14
15
16
17
18
SANGEAN PR-D19
FM/AM DIGITAL RECEIVER
FREQUENCY RANGE
FM : 87.5 - 108 MHz
AM: 9 KI : 522 - 1710 kHz
AM:10KI : 520 - 1710 kHz
DC 6V ⎓ / 1A
AUX IN
DC IN
6V ⎓ / 1A

Control

① Speaker
② Buzzer alarm radio
③ Radio alarm radio
④ Band/Bandwidth/Step button
⑤ Power on indicator
⑥ LCD display
⑦ Power/Sleep button
⑧ Volume down button
⑨ Volume up button
⑩ Display/Mono/Clock set button
⑪ Tuning up/down button
⑫ Key lock switch
⑬ Preset button
⑭ Battery compartment
⑮ Telescopic aerial
⑯ Aux in socket
⑰ Headphone socket
⑱ DC IN socket

Icon display

Ⓐ Battery indicator
Ⓑ Stereo indicator
Ⓒ Bandwidth indicator
Ⓓ Buzzer alarm indicator
Ⓔ Radio alarm indicator
Ⓕ Key lock symbol
Ⓖ Sleep timer indicator/Snooze indicator
Ⓗ Preset indicator
Ⓘ Volume indicator
Ⓙ Frequency/Clock display
Ⓚ PM indicator
Ⓛ FM/AM indicator

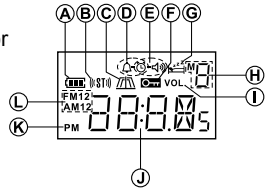

Using the radio for the first time

Battery operation

1. Remove the battery cover on the rear of the unit by pressing the catch.

2. Insert four UM-3 (AA size) batteries into the spaces in the compartment.

3. Take care to ensure all batteries are inserted with correct polarity as shown on the rear cabinet. Replace the battery cover.

4. Reduced power, distortion, “stuttering sound” and the battery icon flashing on the display are all signs that the batteries need replacing.

5. If the radio is not to be used for any extended period of time, it is recommended that the batteries are removed from the radio.

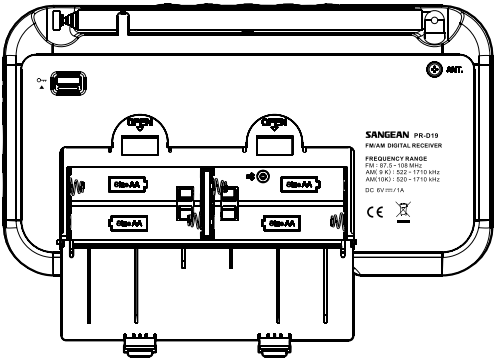

Using the AC power adaptor

The AC power adaptor required for this unit should be 6 volts DC at 1 A center pin positive.

Insert the adaptor plug into the DC socket on the left side of the radio.

Plug the adaptor into a standard mains socket outlet.

Whenever the adaptor is used, the batteries are automatically disconnected.

The AC adaptor should be disconnected from the main supply when not in use.

Operating your radio - Search tuning AM / FM

1. Fully extend the antenna above the radio. Press the Power button to switch on your radio.

2. Press the Band button to select the required band.

3. Press and hold the Tuning up/down button to start the search tuning. Your radio will scan in an upwards direction (low frequency to high frequency) or downwards direction (high frequency to low frequency) and stop automatically when it finds a station of sufficient strength.

4. To find other stations, press and release the Tuning Up/Down buttons.

5. Adjust the volume by pressing the Volume up/down button to the required setting.

Note:

To see time or frequency on the screen, press the Display button.

Manual tuning - AM / FM

1. Press the Power button to switch on your radio.

2. Press the Band button to select the required band. Fully extend the antenna for best reception.

3. Press and release the Tuning up/down button to tune to a station. The FM frequency will change in steps of 50/100kHz and AM frequency will change in steps of 9/10kHz.

4. When the waveband end is reached the radio will recommence tuning from the opposite waveband end.

5. Set the Volume using the Volume Up/Down buttons to the desired settings.

Presetting stations

You may store your preferred AM/FM radio stations to the preset stations (1 to 5). The procedure for setting preset Stations is described below.

Note that the radios for AM (AM1/AM2) and FM (FM1/FM2) are saved together in the preset stations so there are 20 of them. Your preset stations will be preserved for 30 minutes when there is no power supply from either the battery or the AC adapter.

1. Press the Power button to switch on your radio.

2. Tune to the required station as previously described.

3. Press and hold the required Preset button (1-5) until you hear a beep sound and the display shows‘M1’ for example on the top right corner. The station will be stored using the preset number. Repeat this procedure for the remaining presets as you wish.

4. Preset stations which have already been stored may be overwritten by following the above procedure if required.

Stereo / Mono switch

If the FM radio station being listened to has a weak signal, some hiss may be audible. It is possible to reduce this hiss by forcing the radio to play the station in mono rather than stereo.

Press and hold the Display/Mono button to switch to mono. LCD display Stereo icon will disappear.

AM / FM Bandwidth narrowing

In order to obtain better reception of weaker AM/FM stations, your radio has a function to narrow the AM/FM bandwidth to reduce high frequency noise.

1. Select the AM or FM band by pressing the Band button.

2. Press and hold the Band button until the radio beeps to activate the function. ( ) will show on the display. To return to the default setting, press and hold the Band button until the radio beeps. ( ) will show on the display.

Software version / Setting up the tuning step increment / 24 / 12 time format

Software version

The software display cannot be altered and is just for your reference.

1. Make sure your radio is in power off mode.

2. Press and hold the Band/step button until the software version is shown on the display (e.g. P0 X).

12 / 24 time format

While the software version is shown on the screen, press the Tuning up/down button to select 12/24 time format option (i.e. 12H or 24H). Press and release the Display button to enter the setting. Current time format will flash on the display. Then press the Tuning up/down button to select your requested option. Finally, press the Display button to confirm your selection.

Setting up FM tuning step increment

1. If the radio is in standby mode, make sure to follow the step 1-2 above to enter software version.

2. While the software version is shown on the screen, press the Tuning up/down button to select FM step setting option (i.e. 50 or 100).

3. Press the Display button to enter the setting and current FM step setting will flash on the display.

4. Press the Tuning up/down button to select your requested option Then press the Display button to confirm your selection.

Setting up AM tuning step increment

GB

1. If the radio is in standby mode, make sure to follow the step 1-2 above to enter software version.

2. While the software version is shown on the screen, press the Tuning up/down button to select AM step setting option (i.e. 9 or 10).

3. Press the Display button to enter the setting and current AM step setting will flash on the display.

4. Press the Tuning up/down button to select your requested option. Then press the Display button to confirm your selection.

Clock setting

1. Make sure the radio is powered off.

2. Press and hold the clock set button until the radio beeps once and the hour digits of time setting begins to flash.

3. Press the Tuning Up/Down button to adjust the hour setting as required. Then press the clock set button to confirm the hour setting. Now the minute digit of the setting will flash on the display.

4. Press the Tuning up/down button to adjust the minute setting as required. Then press the clock set button to confirm the setting. Your radio clock is now set.

Alarm setting

There are two different alarm modes in this unit. You can choose to wake up to the radio or to a buzzer. You can set the alarm with the radio on or off.

1. Press and hold the Alarm button until you hear a beep and see one of these symbol 🔔-⏰ or ⏰-🔊 flashing on the display.

2. Now both the hour digit and alarm symbol will flash. Press the Tuning up/down button to set the required hour. Press the Alarm button again to confirm the setting.

3. Now the minute digit will flash on the display. Press the Tuning up/down button to adjust the required minute. Press the Alarm button again to confirm the minute setting. If you are setting the radio alarm (🔊), please go to step 5. Otherwise, please follow the next step.

4. Press the Tuning up/down button to adjust the volume. Then press the Alarm button to confirm the setting. Now the alarm setting is completed. Once the alarm is set, it will automatically go off the next day at the same time.

5. If the radio alarm is selected, you need to choose the station to wake up to. Press the Tuning up/down button to select the desired band and press the Radio Alarm button to confirm the setting.Then press the Tuning up/down button to select your wake-up station. Or you can choose from the preset stations by pressing the Tuning up/down button and then Preset 1-5 button. Press the Radio Alarm button to confirm the setting.

6. Press the Tuning up/down button to adjust the volume. Then press the Alarm button to confirm the setting. Now the radio alarm setting is completed.

Snooze

When the alarm sounds, press any button other than the Standby button will silence the alarm for 5 minutes. will appear on the display.

To cancel the snooze timer while the alarm is suspended, press the Power button.

Turning off the sounding alarm

Press the Power button to turn off the sounding alarm, otherwise, the alarm will sound for an hour.

Cancelling the alarm setting

Press and hold the Alarm button until you hear a beep and the alarm symbol will disappear on the display.

Sleep timer

Your radio can be set to turn off automatically after a preset time has elapsed. The Sleep Timer setting can be adjusted between 15,30, 45, 60, 90 and 120 minutes.

1. Press and hold the Power/Sleep timer button until you hear a beep and the symbol of shows on the display.

2. Holding the Power/Sleep timer button down will cycle through the times of 120, 90, 60, 45, 30 and 15 minutes.

3. Release the button when the desired sleep timer option appears on the display. Now the symbol will appear on the display. The radio will shut off after a preset time has elapsed.

Note:
To deactivate the sleep timer, simply press and release the Power button.

Headphone socket

A 3.5mm stereo headphone socket is provided on the left hand side of your radio for use with headphones. Inserting a plug automatically mutes the internal speaker.

IMPORTANT:
Excessive sound pressure from earphones and headphones can cause hearing loss. add "Aux in" text

Auxiliary input socket

A standard 3.5mm Auxiliary input socket is provided on the left side of the unit to permit an audio signal to be fed into the unit from any devices that features a headphone or audio output, such as an iPod, MP3 or CD player.

1. Press the Band button repeatedly until “AUX” shows on the display.

2. Connect a stereo or mono audio source (for example, iPod, MP3 or CD player) to the Auxiliary input socket (marked 'AUX IN').

3. Adjust the Volume control on your iPod, MP3 or CD player to ensure an adequate signal and then adjust the volume on the speaker for comfortable listening.

Key lock function

The key lock function is used to prevent unintentional operation of the radio.

1. Key lock switch is located on the rear of the radio. When the key lock switch is set to LOCK, every button will be disabled. Display will show the lock symbol .

2. To disable the key lock function switch the key lock button to off position. The key lock function will be disabled.

Specifications

GB

Power Requirements

Mains	DC in 6V / 1 A
Battery	4 X 1.5V Size “AA” / UM-3 / LR6

Frequency Range

FM 87.5 – 108 MHz
AM (9K) 522 – 1710 kHz
AM (10K) 520 – 1710 kHz

Circuit Features

Loudspeaker	2.25” 8 ohm full range
Output Power	1 Watt (max)
Headphone socket	3.5mm dia.
Aerial System	FM Telescopic aerial

The company reserves the right to amend the specification without notice.

If at any time in the future you should need to dispose of this product please note that: Waste electrical products should not be disposed of with household waste. Please recycle where facilities exist. Check with your Local Authority or retailer for recycling advice. (Waste Electrical and Electronic Equipment Directive)