Form No. 3476-324 Rev A

Power Max® e24 60V Snowthrower

Model No. 39924—Serial No. 418053488 and Up

Model No. 39925—Serial No. 418102256 and Up

Operator's Manual

Introduction

This machine is intended to be used by residential homeowners. It is designed primarily for removing snow from paved surfaces, such as driveways and sidewalks, and other surfaces for traffic on residential or commercial properties. It is not designed for removing materials other than snow. It is designed to use Flex-Force 60V lithium-ion battery packs. These battery packs are designed to be charged only by Flex-Force 60V lithium-ion battery chargers. Using this product for purposes other than its intended use could prove dangerous to you and bystanders.

Read this information carefully to learn how to operate and maintain your product properly and to avoid injury and product damage. You are responsible for operating the product properly and safely.

Visit www.Toro.com for product safety and operation training materials, accessory information, help finding a dealer, or to register your product.

Whenever you need service, genuine Toro parts, or additional information, contact an Authorized Service Dealer or Toro Customer Service and have the model and serial numbers of your product ready. Figure 1 identifies the location of the model and serial numbers on the product. Write the numbers in the space provided.

Important: **With your mobile device, you can scan the QR code on the serial number decal (if equipped) to access warranty, parts, and other product information.**

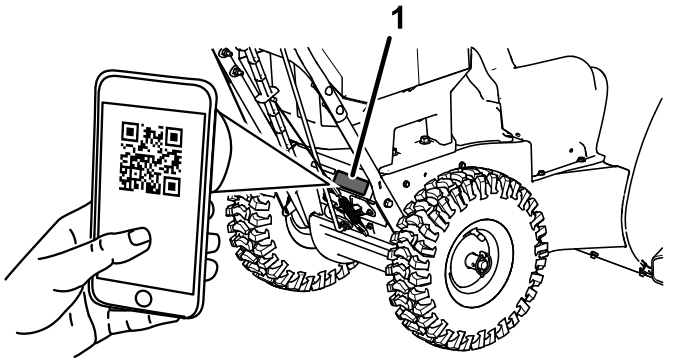

Figure 1

1. Model and serial number location

Model No. _____

Serial No. _____

© 2025—The Toro® Company
8111 Lyndale Avenue South
Bloomington, MN 55420

Register at www.Toro.com.

Original Instructions (EN)
Printed in Mexico
All Rights Reserved

3476-324

Safety-Alert Symbol

The safety-alert symbol (Figure 2) shown in this manual and on the machine identifies important safety messages that you must follow to prevent accidents.



g000502

Figure 2

Safety-alert symbol

The safety-alert symbol appears above information that alerts you to unsafe actions or situations and is followed by the word **DANGER**, **WARNING**, or **CAUTION**.

DANGER indicates an imminently hazardous situation which, if not avoided, **will** result in death or serious injury.

WARNING indicates a potentially hazardous situation which, if not avoided, **could** result in death or serious injury.

CAUTION indicates a potentially hazardous situation which, if not avoided, **may** result in minor or moderate injury.

This manual uses two other words to highlight information. **Important** calls attention to special mechanical information and **Note** emphasizes general information worthy of special attention.

⚠ WARNING

CALIFORNIA
Proposition 65 Warning

The power cord on this product contains lead, a chemical known to the State of California to cause birth defects or other reproductive harm. Wash hands after handling.

Use of this product may cause exposure to chemicals known to the State of California to cause cancer, birth defects, or other reproductive harm.

Contents

Introduction 1
Safety-Alert Symbol 2
Safety 3
..... 3
Safety and Instructional Decals 6
Setup 9
1 Mounting the Battery Charger (Optional) 9
2 Installing the Chute 9
3 Installing the Upper Handle 10
4 Installing the Traction-Control Linkage 11
5 Installing the Chute-Control Rod 11
6 Installing the Snow-Cleanout Tool 12
7 Checking the Tire Pressure 13
8 Checking the Skids and Scraper 14
9 Adjusting the Auger/Impeller Cable 14
10 Checking the Operation of the Traction Drive 14
Product Overview 15
Specifications 16
Attachments/Accessories 16
Operation 16
Before Operation 16
Installing the Battery Pack 16
Checking the State of Charge 17
During Operation 17
Starting the Machine 17
Activating ECO Mode 17
Charging the Battery Pack 18
Operating the Traction Drive 19
Operating the Speed Selector 19
Operating the Auger/Impeller Drive 20
Operating the Quick Stick® 21
Clearing a Clogged Discharge Chute 21
Operating Tips 22
After Operation 23
Shutting Off the Machine 23
Removing the Battery Pack from the Machine 23
Preventing Freeze-up after Use 23
Maintenance 24
Recommended Maintenance Schedule(s) 24
Preparing for Maintenance 24
Checking and Adjusting the Skids and Scraper 24
Checking and Adjusting the Traction Cable 25
Checking and Adjusting the Auger/Impeller Cable 26
Checking the Auger-Gearbox-Oil Level 27
Lubricating the Hex Shaft 27
Replacing the Drive Belts 28
Storage 29
Storing the Machine 29
Troubleshooting 30

Safety

IMPORTANT SAFETY INSTRUCTIONS

⚠ WARNING

When using an electric machine, always read and follow basic safety warnings and instructions to reduce the risk of fire, electric shock, or injury, including the following:

Read All Instructions

I. Training

1. The operator of the machine is responsible for any accidents or hazards occurring to others or their property.
2. Read and understand the contents of this *Operator's Manual* before you start the machine. Ensure that everyone using this machine knows how to use it, knows how to shut it off quickly, and understands the warnings.
3. Do not allow children to use or play with the machine, battery pack, or the battery charger; local regulations may restrict the age of the operator.
4. Do not allow children or untrained people to operate or service this device. Allow only people who are responsible, trained, familiar with the instructions, and physically capable to operate or service the device.
5. Before using the machine, battery pack, and battery charger, read all the instructions and cautionary markings on these products.
6. Become familiar with the controls and proper use of the machine, battery pack, and battery charger.

II. Preparation

1. Keep bystanders and children out of the operating area.
2. Never allow children to operate the machine.
3. Do not operate the machine without all guards and other safety devices in place and functioning properly on the machine.
4. Inspect the area where you will use the machine and remove all objects that could interfere with the operation of the machine or that the machine could throw.
5. Use only the battery pack specified by Toro. Using other accessories and attachments may increase the risk of injury and fire.
6. Plugging the battery charger into an outlet that is not 120V can cause a fire or electric shock. Do not plug the battery charger into an outlet other than 120V.
7. Do not use a damaged or modified battery pack or battery charger, which may exhibit unpredictable behavior that results in fire, explosion, or risk of injury.
8. If the supply cord to the battery charger is damaged, contact an Authorized Service Dealer to replace it.
9. Charge the battery pack with only the battery charger specified by Toro. A charger suitable for 1 type of battery pack may create a risk of fire when used with another battery pack.
10. Charge the battery pack in a well-ventilated area only.
11. Follow all charging instructions and do not charge the battery pack outside of the temperature range specified in the instructions. Otherwise, you may damage the battery pack and increase the risk of fire.
12. Dress properly—Wear appropriate clothing, including eye protection; long pants; substantial, slip-resistant rubber boots; and hearing protection. Tie back long hair and do not wear loose clothing or loose jewelry that can get caught in moving parts.

III. Operation

1. Contact with the moving rotor will cause serious injury. Keep your hands and feet away from all moving parts of the machine. Keep clear of any discharge opening.
2. Stay behind the handles and away from the discharge opening while operating the machine.
3. Using this machine for purposes other than its intended use could prove dangerous to you and bystanders.
4. Prevent unintentional starting—Ensure that the electric-start key is removed from the key switch before connecting the battery pack and handling the machine.
5. Use your full attention while operating the machine. Do not engage in any activity that causes distractions; otherwise, injury or property damage may occur.
6. Disengage all clutches and shift into neutral before starting the machine.
7. Shut off the machine, remove the electric-start key, remove the battery pack from the machine, and wait for all movement to stop before adjusting, servicing, cleaning, or storing the machine.
8. Remove the battery pack and electric-start key from the machine whenever you leave it unattended or before changing accessories.
9. Do not force the machine—Allow the machine to do the job better and safer at the rate for which it was designed.
10. Stay alert—Watch what you are doing and use common sense when operating the machine. Do not use the machine while ill, tired, or under the influence of alcohol or drugs.
11. Operate the machine only in good visibility and appropriate weather conditions.
12. Use extreme caution when reversing or pulling the machine toward you.
13. Keep proper footing and balance at all times, especially on slopes. Use extreme caution when changing directions on slopes. Do not operate the machine on exceedingly steep slopes. Walk, never run with the machine.
14. When not actively clearing snow, disengage power to the auger.
15. Adjust the collector housing height to clear a gravel or crushed-rock surface.
16. Do not direct the discharge material toward anyone. Avoid discharging material against a wall or obstruction; material may ricochet toward you. Shut off the machine when crossing gravel surfaces.
17. Exercise extreme caution when operating the machine on walks or roads. Stay alert for hidden hazards or traffic.
18. If the machine strikes an object or starts to vibrate, immediately shut off the machine, remove the key, remove the battery pack, and wait for all movement to stop before examining the machine for damage. Make all necessary repairs before resuming operation.
19. Shut off the machine whenever you leave the operating position for any reason.
20. Shut off the machine, remove the electric-start key, and remove the battery pack(s) before unclogging the machine and always use a stick or a cleanout tool to remove the clog.
21. Shut off the machine, remove the electric-start key, and remove the battery pack(s) before loading the machine for hauling.
22. Never operate the machine at high transport speeds on slippery surfaces.
23. Under abusive conditions, the battery pack may eject liquid; avoid contact. If you accidently come into contact with the liquid, flush with water. If the liquid contacts your eyes, seek medical help. Liquid ejected from the battery pack may cause irritation or burns.
24. Do not expose a battery pack or tool to fire or excessive temperature. Exposure to fire or temperature above 130°C (265°F) may cause explosion.
25. CAUTION—A mistreated battery pack may present a risk of fire, explosion, or chemical burn.
    - Do not disassemble the battery pack.
    - Replace the battery pack with a genuine Flex-Force battery pack only; using another type of battery pack may cause a fire or risk of injury.
    - Keep battery packs out of the reach of children and in the original packaging until you are ready to use them.

IV. Maintenance and Storage

1. Shut off the machine, wait for all moving parts to stop, remove the electric-start key, and remove the battery pack(s) from the machine before adjusting, servicing, cleaning, or storing the machine.
2. Do not attempt to repair the machine except as indicated in the instructions. Have an Authorized Service Dealer perform service on the machine using identical replacement parts.
3. Wear gloves and eye protection when servicing the machine.
4. When servicing the rotor, be aware that the rotor can still move even though the power source is off.
5. For best performance, use only genuine Toro replacement parts and accessories. Other replacement parts and accessories could be dangerous, and such use could void the product warranty.
6. Maintain the machine—Keep handles dry, clean, and free from oil and grease. Keep guards in place and in working order. Use identical replacement parts only.
7. Check all fasteners at frequent intervals for proper tightness to ensure that the machine is in safe working condition.
8. Check the machine for damaged parts. Check for misaligned and binding moving parts, broken parts, mounting, and any other condition that may affect its operation. Unless indicated in the instructions, have an Authorized Service Dealer repair or replace a damaged guard or part.
9. When the battery pack is not in use, keep it away from metal objects such as paper clips, coins, keys, nails, and screws that can make a connection from 1 terminal to another. Shorting the battery terminals may cause burns or a fire.
10. When you are not using the machine, store it indoors in a dry, secure place out of the reach of children.
11. When storing the machine for more than 30 days, refer to Storage (page 29) for important information.

SAVE THESE INSTRUCTIONS

Safety and Instructional Decals

Safety decals and instructions are easily visible to the operator and are located near any area of potential danger. Replace any decal that is damaged or missing.



decal94-8072

94-8072



decal121-6817

121-6817

1. Cutting/dismemberment hazard of hand or foot, impeller and auger—keep bystanders away.

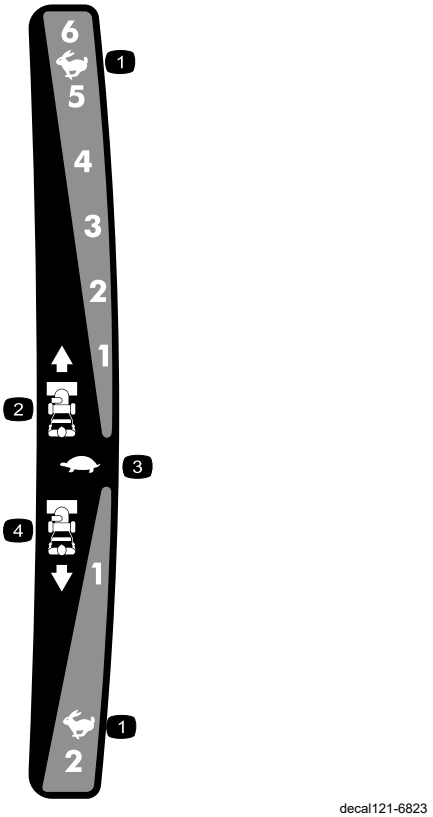

decal121-6823

121-6823

1. Fast
2. Forward speeds
3. Slow
4. Reverse speeds

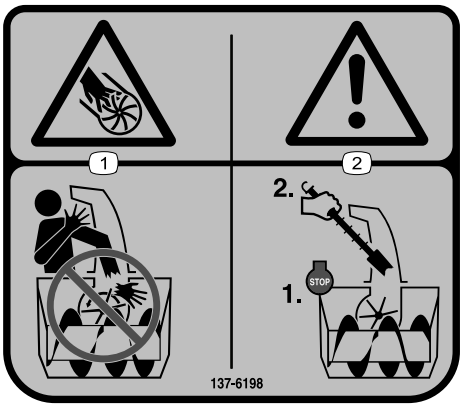

decal137-6198

137-6198

1. Cutting/dismemberment hazard of the fingers or hand, impeller—do not place your hand in the chute.
2. Warning—shut off the motor before using the tool to clear the chute.



decal137-6249

137-6249

1. Squeeze the lever to engage the traction drive.
2. Warning—read the *Operator's Manual*.
3. Cutting/dismemberment of fingers or hand, impeller blade—do not place your hand in the chute; shut off the motor before using the tool to clear the chute.
4. Cutting/dismemberment of fingers or hand, impeller blade—keep away from moving parts; keep all guards and shields in place; remove the key from the ignition before servicing the machine.
5. Thrown object hazard—keep bystanders away.
6. Squeeze the lever to engage the impeller.



decal161-3780

161-3780



decal161-3775

161-3775

1. The battery pack is charging.
2. The battery pack is fully charged.
3. The battery pack is over or under the appropriate temperature range.
4. Battery pack charging fault

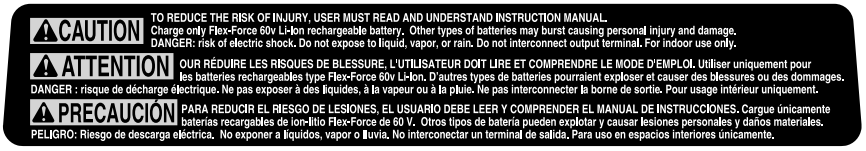

decal161-3788

161-3788



decal137-9456

137-9456

1. Read the *Operator's Manual*.
2. Keep away from open fire or flames.
3. Do not expose to rain.

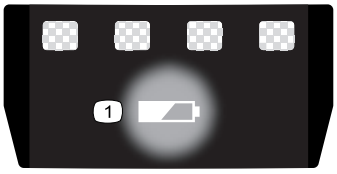

decal137-9461

137-9461

1. Battery charge status

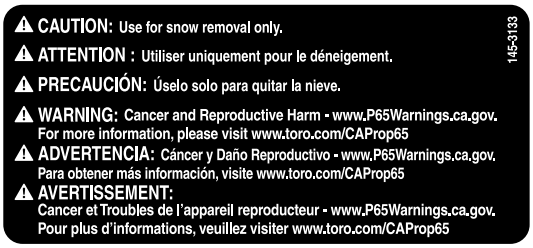

decal145-3133

145-3133

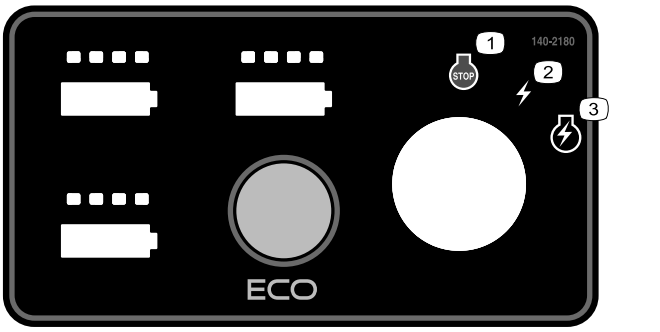

decal140-2180

140-2180

1. Off
2. Power
3. Start

Setup

Important: **The battery pack is not fully charged when you purchase it. Before using the machine for the first time, refer to Charging the Battery Pack (page 18).**

1

Mounting the Battery Charger (Optional)

Parts needed for this procedure:

2	Mounting hardware (not included)

Procedure

If desired, mount the battery charger securely on a wall using the wall-mount key holes on the back of the charger.

Mount it indoors (such as a garage or other dry place), near a power outlet, and out of the reach of children.

Refer to Figure 3 for assistance in mounting the charger.

Slide the charger over the appropriately positioned hardware to secure the charger in place (hardware not included).

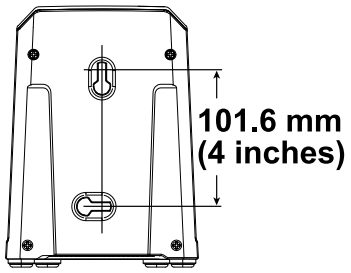

g290534

Figure 3

2

Installing the Chute

No Parts Required

Procedure

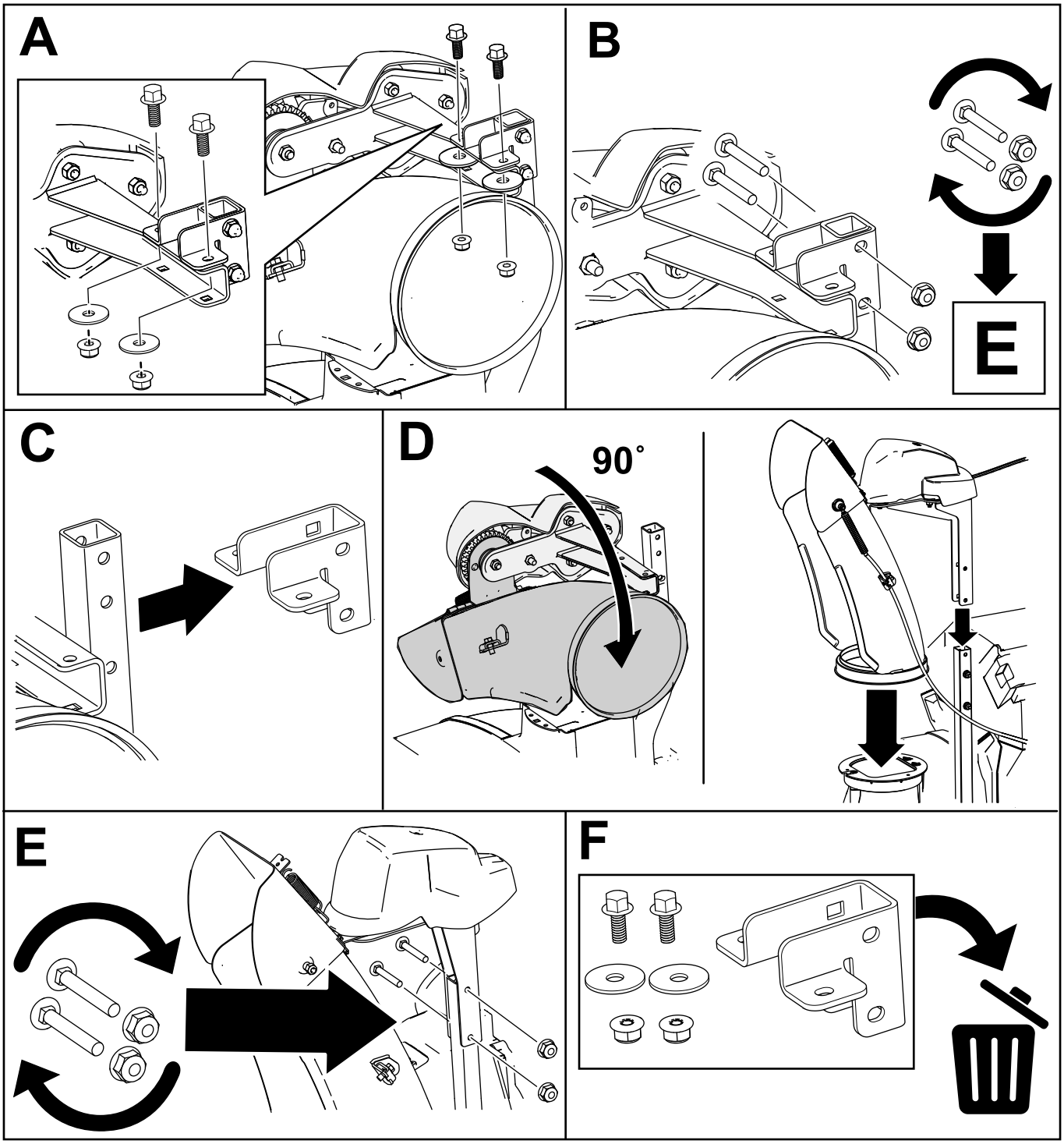

g461561

3

Installing the Upper Handle

No Parts Required

Procedure

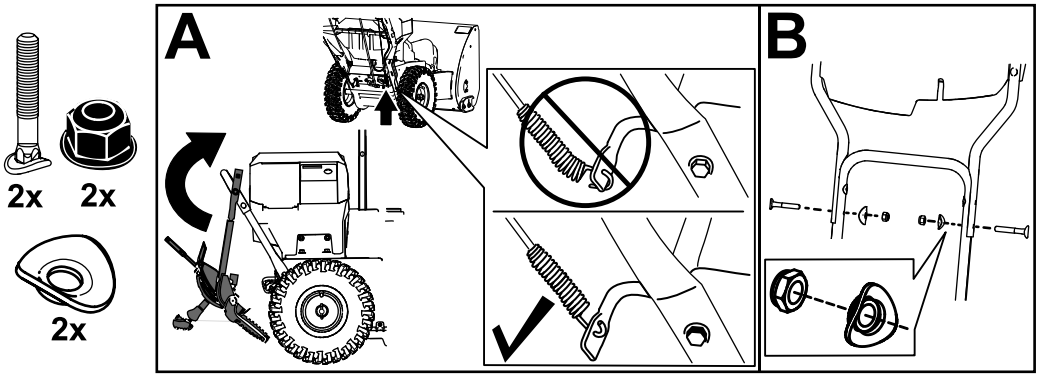

g461559

4

Installing the Traction-Control Linkage

No Parts Required

Procedure

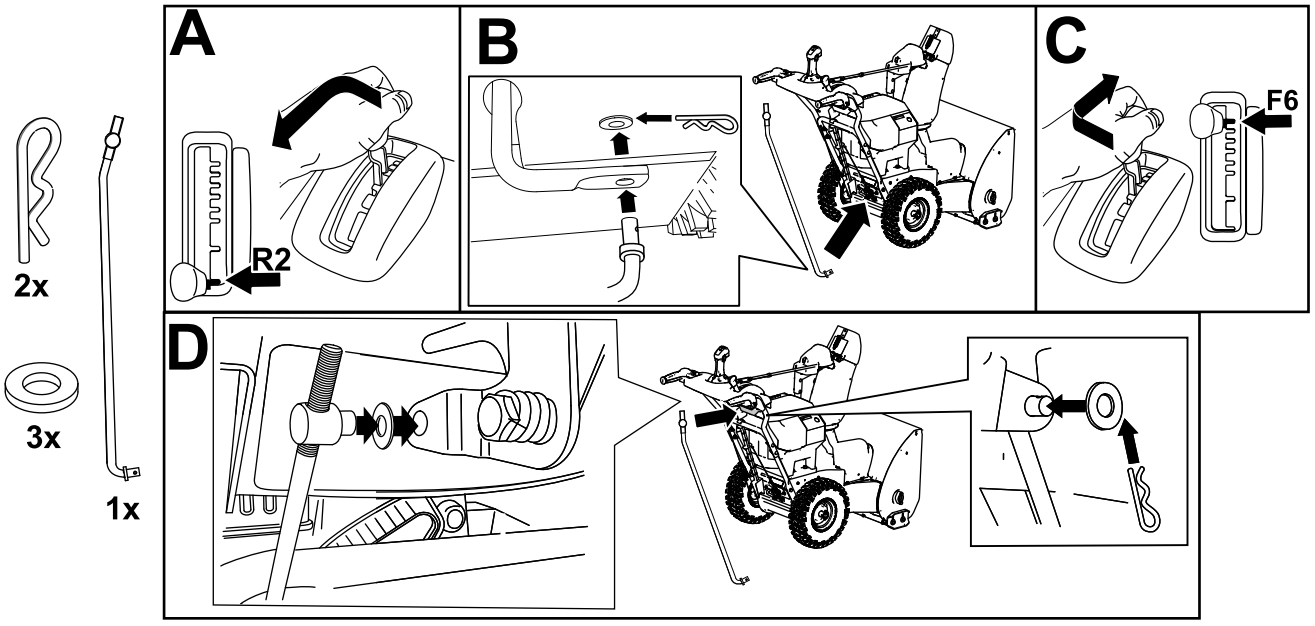

g461560

5

Installing the Chute-Control Rod

No Parts Required

Procedure

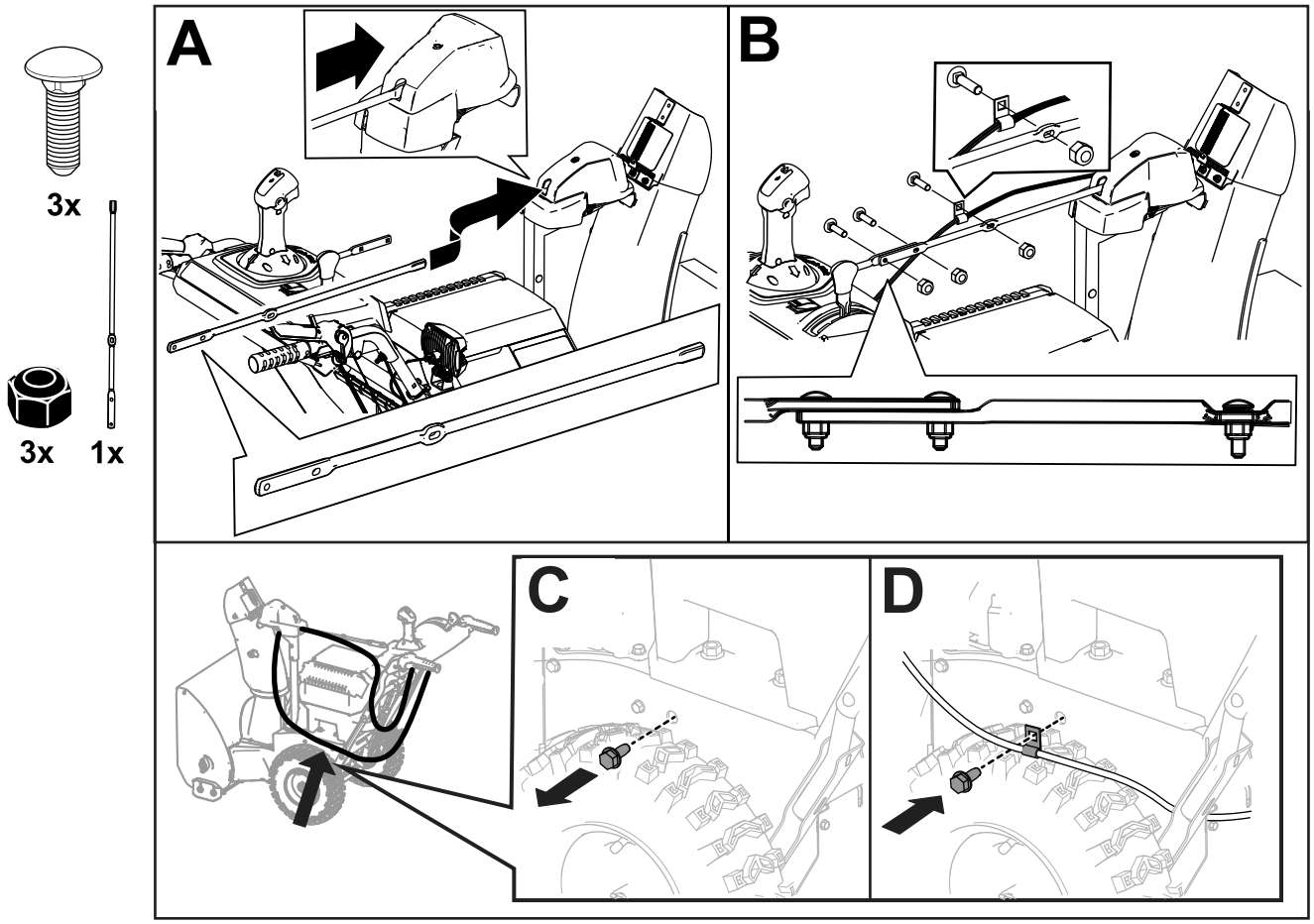

g461558

6

Installing the Snow-Cleanout Tool

No Parts Required

Procedure

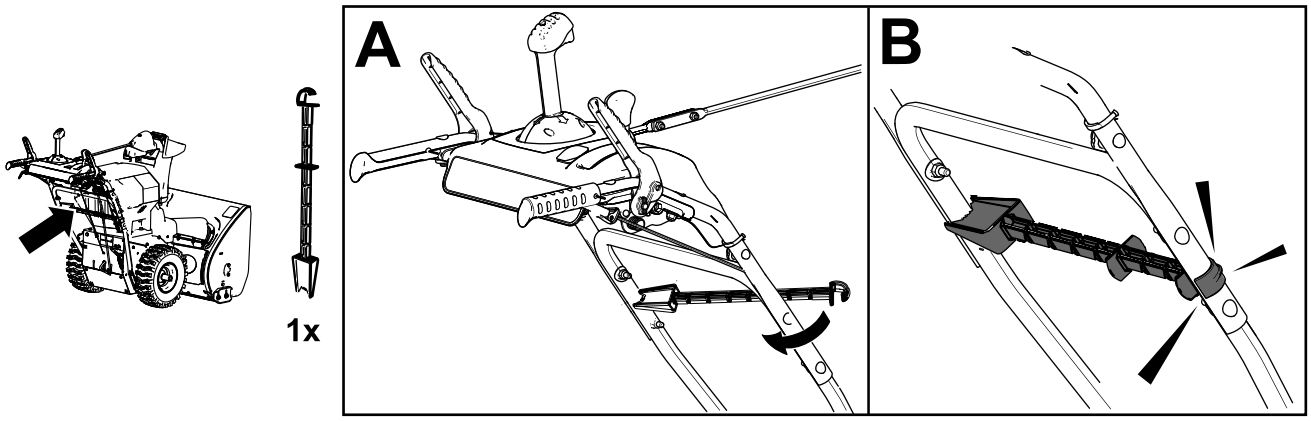

g344095

7

Checking the Tire Pressure

No Parts Required

Procedure

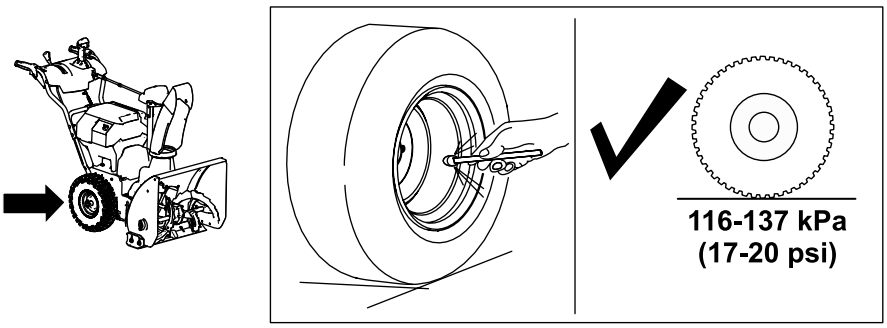

g344084

8

Checking the Skids and Scraper

No Parts Required

Procedure

Refer to 8 Checking the Skids and Scraper (page 14).

9

Adjusting the Auger/Impeller Cable

No Parts Required

Procedure

Check and adjust the auger/impeller cable before first use; refer to 9 Adjusting the Auger/Impeller Cable (page 14).

10

Checking the Operation of the Traction Drive

No Parts Required

Procedure

⚠ CAUTION

If the traction drive is not properly adjusted, the machine may move in the direction opposite of what you intended, causing injury and/or property damage.

Carefully check the traction drive and adjust it properly, if necessary.

1. Start the machine; refer to Starting the Machine (page 17).
2. Move the speed selector to Position R1; refer to Operating the Speed Selector (page 19).
3. Squeeze the left (traction) lever to the handgrip (Figure 10).

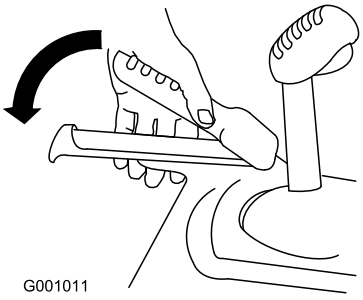

Figure 10

The machine should move rearward. If the machine does not move or moves forward, complete the following:

A. Release the traction lever and shut off the machine; refer to Shutting Off the Machine (page 23).
B. Disconnect the trunnion from the speed-selector lever.
C. Turn the trunnion downward (clockwise) on the speed-control rod.
D. Connect the trunnion to the speed-selector lever.

4. Release the traction lever.
5. Move the speed selector to Position 1; refer to Operating the Speed Selector (page 19).
6. Squeeze the left (traction) lever to the handgrip (Figure 10).

   The machine should move forward. If the machine does not move or moves rearward, complete the following:

   A. Release the traction lever and shut off the machine.
   B. Disconnect the trunnion from the speed-selector lever.
   C. Turn the trunnion upward (counterclockwise) on the speed-control rod.
   D. Connect the trunnion to the speed-selector lever.

7. If you made any adjustments, repeat this procedure until no adjustments are required.

Important: **If the machine moves when the traction lever is in the released position, check the traction cable; refer to Checking and Adjusting the Traction Cable (page 25) or take the machine to an Authorized Service Dealer for service.**

Product Overview

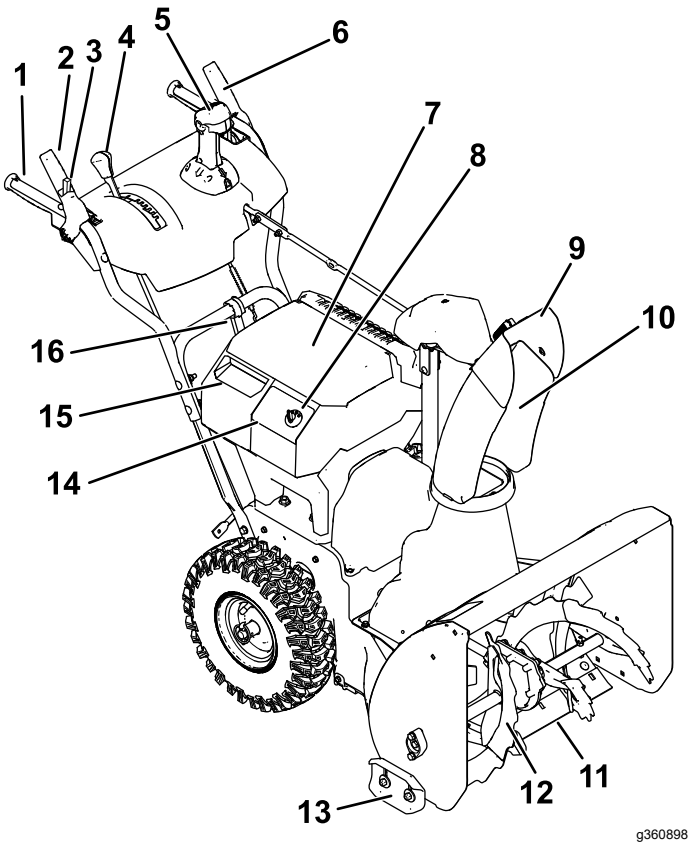

Figure 11

1. Handgrip (2)
2. Auger/impeller lever
3. Lock switch
4. Speed-selector lever
5. Quick Stick® discharge-chute control
6. Traction lever
7. Main battery-compartment lid
8. Electric-start key
9. Chute deflector
10. Discharge chute
11. Scraper
12. Auger
13. Skid (2)
14. Control panel
15. Secondary battery-compartment lid
16. Snow-cleanout tool

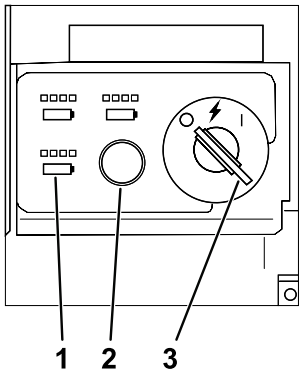

Figure 12

1. Battery charge lights
2. ECO button
3. Key switch in OFF position

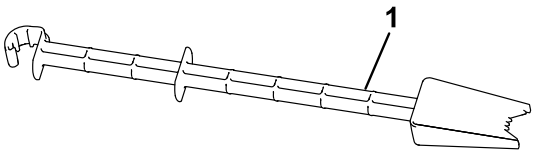

Figure 13

1. Snow-cleanout tool (attached to the handle)

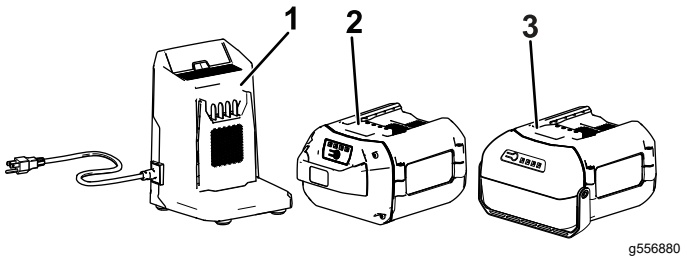

Figure 14

1. Battery charger Model 88605 (2 included with Model 39924) (1 included with Model 39925)
2. Battery pack Model 88660 (2 included with Model 39924)
3. Battery pack Model 68810 (1 included with Model 39925)

Specifications

Model	Weight	Length	Width	Height
39924	78 kg (172 lb)	142 cm (56 inches)	62.5 cm (24.6 inches)	111.8 cm (44.0 inches)
39925	77 kg (170 lb)			

Battery Pack

Model	88660	68810
Battery pack capacity	6.0 Ah	10.0 Ah
	324 Wh	540 Wh
Battery manufacturer rating = 60V maximum and 54V nominal. Actual voltage varies with load.		

Battery Charger

Model	88605
Type	60V MAX Lithium-Ion Battery Rapid Charger
Input	120V AC ~5.0A, 60Hz
Output	60V DC ⎓ 5.5A MAX

Appropriate Temperature Ranges

Charge/store the battery pack at	5°C (41°F) to 40°C (104°F)*
Use the battery pack at	-30°C (-22°F) to 49°C (120°F)*
Use the machine at	-30°C (-22°F) to 49°C (120°F)*

*Charging time will increase if you do not charge the battery within this range.

Store the machine, battery pack, and battery charger in an enclosed clean, dry area.

Attachments/Accessories

A selection of Toro approved attachments and accessories is available for use with the machine to enhance and expand its capabilities. Contact your Authorized Service Dealer or authorized Toro distributor or go to www.Toro.com for a list of all approved attachments and accessories.

To ensure optimum performance and continued safety certification of the machine, use only genuine Toro replacement parts and accessories. Replacement parts and accessories made by other manufacturers could be dangerous.

Operation

Note: Determine the left and right sides of the machine from the normal operating position.

Before Operation

Installing the Battery Pack

1. Ensure that the vents on the battery packs are clear of any dust and debris.
2. Lift up the battery-compartment lid.
3. Line up the cavity in the battery pack with the tongue on the machine and slide the battery pack into the compartment until it lock into place (Figure 9).
4. Close the battery-compartment lid.
5. Repeat for the other 2 battery cavities (if needed).

   Note: The combined amp hours of all the installed batteries must add up to 6.0 or greater, otherwise the machine can not start.

   Note: If the battery-compartment lid does not close completely, the battery is not fully installed.

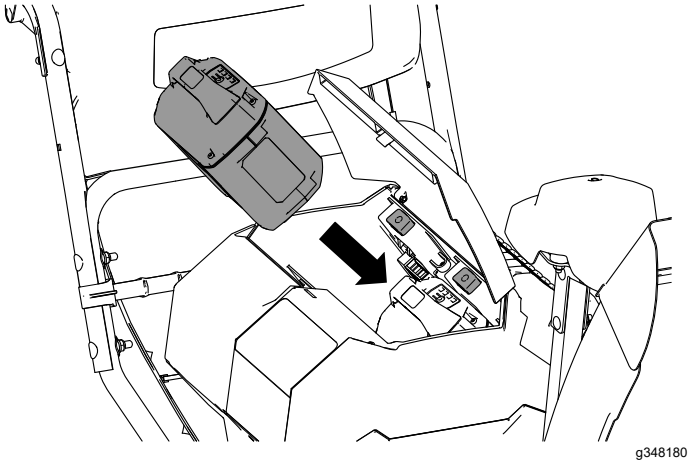

g348180

Figure 15

Checking the State of Charge

You can view the exact state of charge of each installed battery; turn the key to the ACCESSORY position (Figure 16). The position of each set of lights corresponds to the related battery cavity. If the battery state of charge is too low and needs to be charged, or if there is no battery in the corresponding cavity, the battery presence light does not turn on.

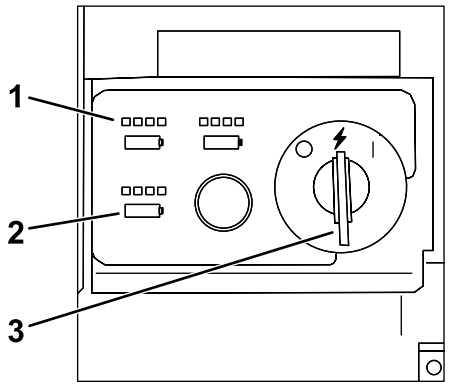

g348182

Figure 16

1. State-of-charge lights
2. Battery presence lights
3. Key switch in the ACCESSORY position

During Operation

Starting the Machine

Note: Use the battery pack only in temperatures that are within the appropriate range; refer to Specifications (page 16).

1. Ensure that the battery pack(s) are installed in the machine; refer to Installing the Battery Pack (page 16).
2. Insert the electric-start key into the control panel
3. Turn the key to the RUN position to turn on the machine (Figure 17).

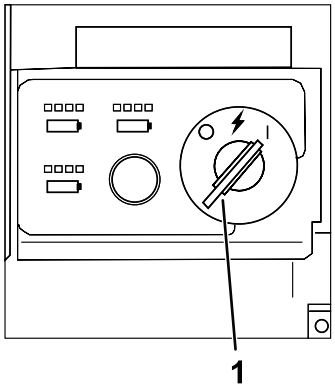

g347864

Figure 17

1. Key switch in ON position

Activating ECO Mode

Using ECO mode may extend battery life by reducing rotor speed; use ECO mode whenever you are moving light snow, or moving snow a short distance. Activate ECO mode using the ECO button as shown in Figure 18.

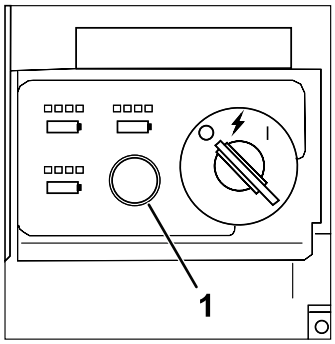

g347866

Figure 18

1. ECO mode button

Charging the Battery Pack

Important: **The battery pack is not fully charged when you purchase it. Before using the tool for the first time, place the battery pack in the charger and charge it until the LED display indicates the battery pack is fully charged. Read all safety precautions.**

Important: **Charge the battery pack only in temperatures that are within the appropriate range; refer to Specifications (page 16).**

Note: At any time, press the battery-charge-indicator button on the battery pack to display the current charge (LED indicators).

1. Ensure that the vents on the battery charger are clear of any dust and debris.

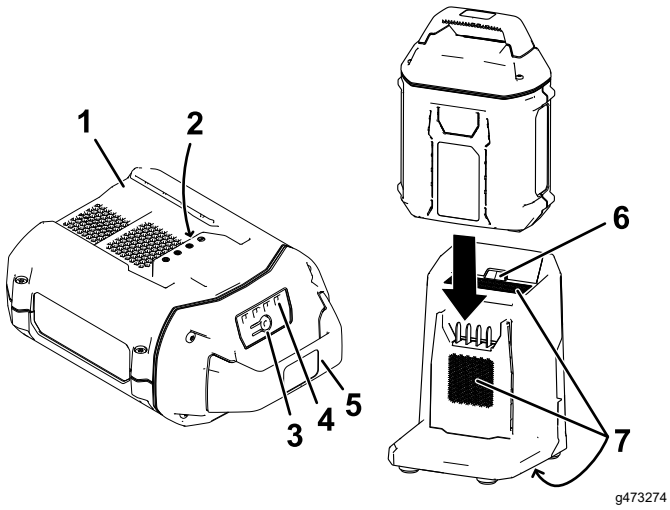

Figure 19

1. Battery pack cavity
2. Battery pack terminals
3. Battery-charge-indicator button
4. LED indicators (current charge)
5. Handle
6. Charger LED indicator light
7. Charger venting areas

2. Line up the cavity in the battery pack (Figure 19) with the tongue on the charger.
3. Slide the battery pack into the charger until it is fully seated (Figure 19).
4. To remove the battery pack, slide the battery backward out of the charger.
5. Refer to the following table to interpret the LED indicator light on the battery charger.

Indicator light	Indicates
Off	No battery pack inserted
Green blinking	Battery pack is charging
Green	Battery pack is charged
Red	Battery pack and/or battery charger is over or under the appropriate temperature range
Red blinking	Battery pack charging fault*

*Refer to Troubleshooting (page 30) for more information.

Important: **The battery can be left on the charger for short periods between uses.**

If the battery will not be used for longer periods, remove the battery from the charger; refer to Storage (page 29).

Operating the Traction Drive

⚠ CAUTION

If the traction drive is not properly adjusted, the machine may move in the direction opposite of what you intended, causing injury and/or property damage.

Carefully check the traction drive and adjust it properly, if necessary; refer to Checking and Adjusting the Traction Cable (page 25) for more information.

Important: **If the machine moves when the traction lever is in the released position, check the traction cable; refer to Checking and Adjusting the Traction Cable (page 25) or take the machine to an Authorized Service Dealer for service.**

1. To engage the traction drive, squeeze the left (traction) lever to the handgrip (Figure 20).

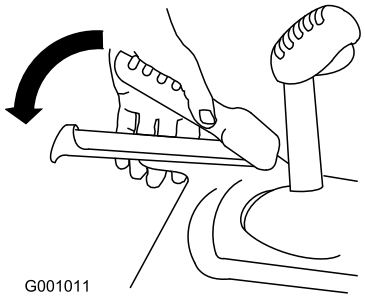

g001011

Figure 20

2. To stop the traction drive, release the traction lever.

Operating the Speed Selector

The speed selector has 6 forward and 2 reverse gears. To change speeds, release the traction lever and shift the speed-selector lever to the desired position (Figure 21). The lever locks in a notch at each speed selection.

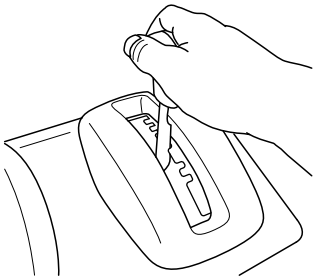

g322971

Figure 21

Operating the Auger/Impeller Drive

1. To engage the auger/impeller drive, move back the lock switch on the lever, then squeeze the right (auger/impeller) lever to the handgrip (Figure 22).

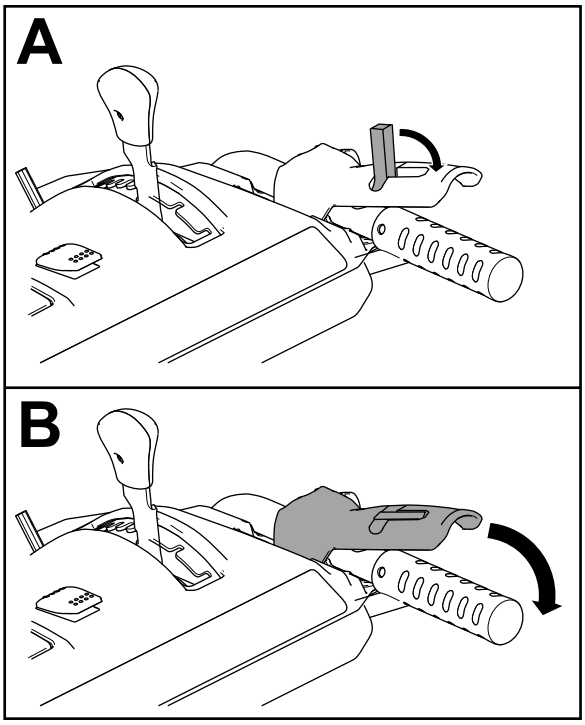

g360687

Figure 22

2. To stop the auger and impeller, release the right lever.

   Important: **When you engage both the auger/impeller lever and the traction lever, the traction lever locks the auger/impeller lever down, freeing your right hand. To release both levers, simply release the left (traction) lever.**

3. If the auger and impeller continue to rotate when you release the auger/impeller lever, do not operate the machine. Check the auger/impeller cable; refer to Checking and Adjusting the Auger/Impeller Cable (page 26) and adjust it if necessary. Otherwise, take the machine to an Authorized Service Dealer for service.

⚠ WARNING

If the auger and impeller continue to rotate when you release the auger/impeller lever, you could seriously injure yourself or others.

Do not operate the machine. Take it to an Authorized Service Dealer for service.

Operating the Quick Stick®

Hold the blue trigger cap down to use the Quick Stick to move the discharge chute and the chute deflector. Release the trigger cap to lock the discharge chute and chute deflector into position (Figure 23).

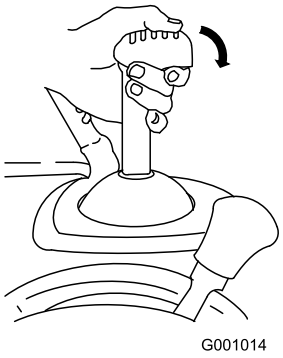

g001014

Figure 23

Moving the Discharge Chute

Hold the blue trigger cap down and move the Quick Stick to the left to move the discharge chute to the left; move the Quick Stick to the right to move the discharge chute to the right (Figure 24).

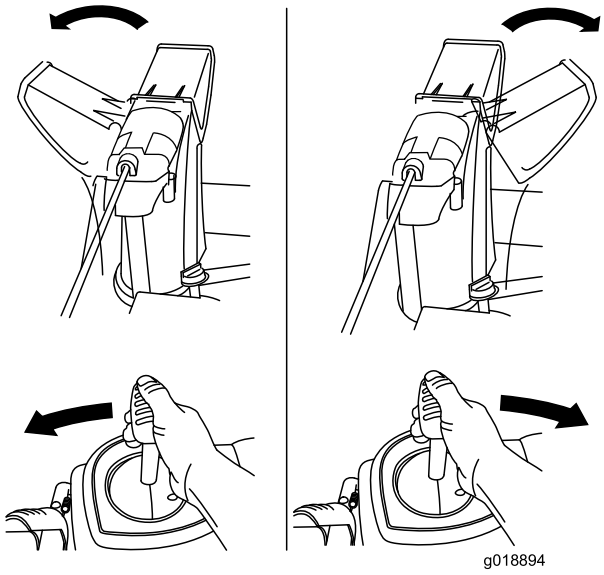

g018894

Figure 24

- If the chute does not turn as far to the left as it does to the right, ensure that the cable is routed to the inside of the handles. Refer to 3 Installing the Upper Handle (page 10).
- If the chute does not move, or does not lock into place when you release the trigger cap, you must adjust the discharge-chute latch cable.

Moving the Chute Deflector

Hold the blue trigger cap down and move the Quick Stick forward to lower the chute deflector; move it rearward to raise the chute deflector (Figure 25).

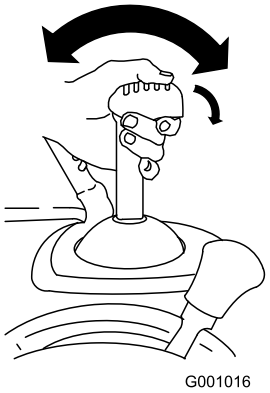

g001016

Figure 25

Clearing a Clogged Discharge Chute

⚠ WARNING

If the auger/impeller is running but there is no snow coming out of the discharge chute, the discharge chute may be clogged.

Never use your hands to clear a clogged discharge chute. This could result in personal injury.

- To unclog the discharge chute, stay in the operating position and release the left (traction) lever. While running the auger/impeller, push down on the handles to raise the front of the machine a few centimeters (inches) off the pavement. Then lift the handles quickly to bump the front of the machine on the pavement. Repeat if necessary until a stream of snow comes out the discharge chute.
- If you cannot unclog the discharge chute by bumping the front of the machine, **shut off the machine, wait for all moving parts to stop, and use the snow-cleanout tool (Figure 13).**

  Important: **Unclogging the discharge chute by bumping the front of the machine on the pavement may cause the skids to move. Adjust the skids and tighten the skid bolts securely; refer to Checking and Adjusting the Skids and Scraper (page 24).**

Operating Tips

⚠ DANGER

When the machine is in operation, the impeller and auger rotate and can injure or amputate hands or feet.

- **Before adjusting, cleaning, inspecting, troubleshooting, or repairing the machine, shut off the machine and wait for all moving parts to stop. Remove the key and the battery from the machine to prevent someone from accidentally starting the machine.**
- **Remove any obstructions from the discharge chute; refer to Clearing a Clogged Discharge Chute (page 21). Use the snow-cleanout tool (Figure 13), not your hands, to remove an obstruction from the discharge chute.**
- **Stay behind the handles and away from the discharge opening while operating the machine.**
- **Keep your face, hands, feet, and any other part of your body or clothing away from concealed, moving, or rotating parts.**

⚠ WARNING

The impeller can throw stones, toys, and other foreign objects and cause serious personal injury to you or bystanders.

- **Keep the area to be cleared free of all objects that the auger could pick up and throw.**
- **Keep all children and pets away from the area of operation.**

For best results, consider the following:

- If the machine slows down under a load or the wheels slip, shift the machine into a lower gear; refer to Operating the Speed Selector (page 19).
- If the front of the machine rides up, shift the machine into a lower gear. If the front continues to ride up, lift up on the handles.
- Remove the snow as soon as possible after it falls.
- Push the machine forward, but allow it to work at its own pace.
- Overlap each swath to ensure complete snow removal.
- Discharge the snow downwind whenever possible.

After Operation

Shutting Off the Machine

1. Release the traction and auger/impeller levers.
2. Turn the key to the OFF position and remove it from the control panel (Figure 12).
3. Remove the battery pack(s); refer to Removing the Battery Pack from the Machine (page 23).

   Note: Whenever you are not using the machine, remove the battery pack(s) and the key from the machine.

   Note: If the machine is turned on and left idling or operating without the auger engaged for an extended period, the motor shutoff timeout will engage, shutting off the machine. When the machine shuts off this way it beeps to indicate that the timeout was engaged.

   To restart the machine refer to Starting the Machine (page 17).

Removing the Battery Pack from the Machine

1. Lift up the battery-compartment lid.
2. Press the battery pack-latch to release the battery pack and remove the battery pack (Figure 26).

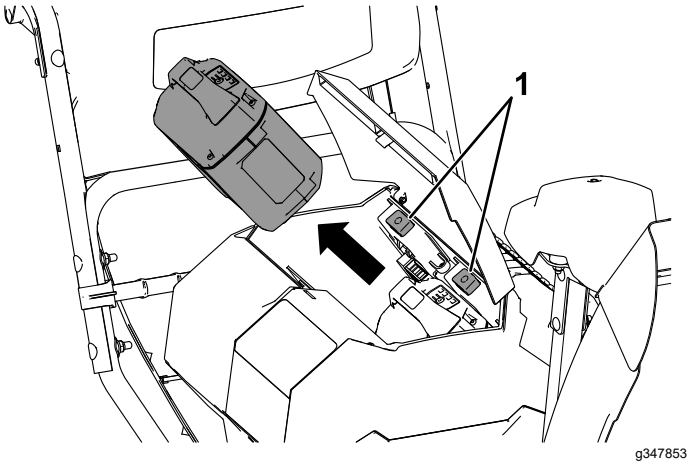

Figure 26

3. Close the battery-compartment lid.

Preventing Freeze-up after Use

- In snowy and cold conditions, some controls and moving parts may freeze. **Do not use excessive force when trying to operate frozen controls.**
- After using the machine, engage the auger to clear any remaining snow from inside the housing. Rotate the Quick Stick to prevent it from freezing. Shut off the machine, wait for all moving parts to stop, remove the key and the battery, and remove all ice and snow from the machine.
- Clean off any snow and ice from the base of the chute.
- Rotate the discharge chute to the left and right to free it from any ice buildup.

Maintenance

Recommended Maintenance Schedule(s)

Maintenance Service Interval	Maintenance Procedure
After the first 2 hours	• Inspect the traction cable and adjust it if necessary. • Inspect the auger/impeller cable and adjust it if necessary.
Yearly	• Check the skids and the scraper and adjust them if necessary. • Inspect the traction cable and adjust or replace it if necessary. • Inspect the auger/impeller cable and adjust or replace it if necessary. • Check the auger-gearbox oil and add oil if necessary. • Lubricate the hex shaft.
Yearly or before storage	• Check the air pressure in the tires and inflate them to 116 to 137 kPa (17 to 20 psi). • Have an Authorized Service Dealer inspect and replace the traction-drive belt and/or the auger/impeller drive belt, if necessary.

Preparing for Maintenance

1. Move the machine to a level surface.
2. Stop the machine, remove the electric-start key, wait for all movement to stop, and remove the battery pack(s) from the machine before adjusting, servicing, cleaning, or storing the machine.

Checking and Adjusting the Skids and Scraper

Service Interval: Yearly—Check the skids and the scraper and adjust them if necessary.

Check the skids and the scraper to ensure that the auger does not contact the paved or gravel surface. Adjust the skids and the scraper as needed to compensate for wear.

1. Check the tire pressure; refer to 7 Checking the Tire Pressure (page 13).
2. Loosen the nuts that secure both skids to the auger sides until the skids slide up and down easily.

   Important: **The auger blades must be supported above the ground by the skids.**

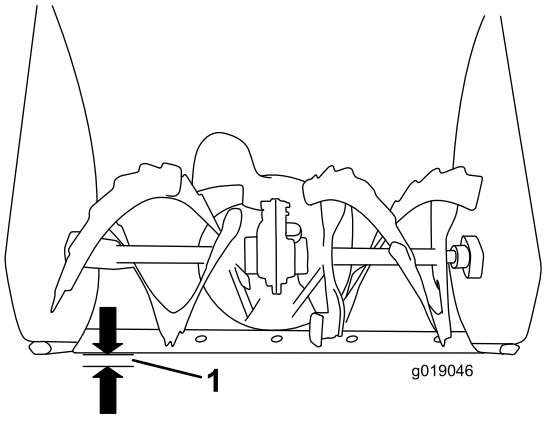

g019046

Figure 27

1. 3 mm (1/8 inch)

3. Ensure that the scraper is 3 mm (1/8 inch) above and parallel to a level surface.

   Note: If the pavement is cracked, rough, or uneven, adjust the skids to raise the scraper. For gravel surfaces, adjust the skids further down to prevent the machine from picking up rocks.

4. Move the skids down until they are even with the ground.
5. Firmly tighten the nuts that secure both skids to the auger sides.

   Note: To easily adjust the skids if they loosen, support the scraper 3 mm (1/8 inch) off the pavement, then adjust the skids down to the pavement.

   Note: If the skids become excessively worn, you can turn them over and set the unused side toward the pavement.

Checking and Adjusting the Traction Cable

Service Interval: After the first 2 hours—Inspect the traction cable and adjust it if necessary.

Yearly—Inspect the traction cable and adjust or replace it if necessary.

If the machine does not drive in the forward or reverse speeds or it drives when you release the traction lever, adjust the traction cable.

If the left (traction) cable is not properly adjusted, do the following steps:

1. Loosen the jam nut.
2. Engage the traction lever and hold it in place (Figure 28).

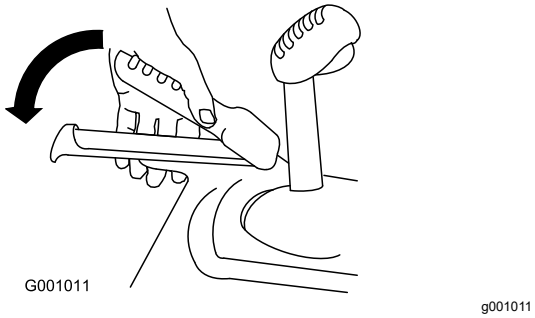

g001011

Figure 28

3. Loosen or tighten the turnbuckle to adjust the spring length to 5.5 cm (2–3/16 inches) as shown in Figure 29.

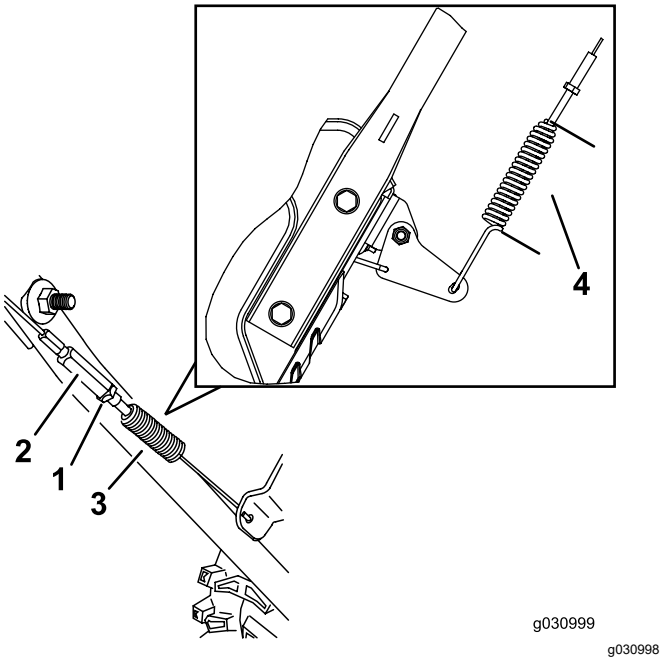

g030999

g030998

Figure 29

1. Jam nut
2. Turnbuckle
3. Spring
4. 5.5 cm (2–3/16 inches)

4. Tighten the jam nut (Figure 29), ensuring that there is slight tension on the cable.
5. If the traction cable is properly adjusted but a problem remains, contact an Authorized Service Dealer.

Checking and Adjusting the Auger/Impeller Cable

Service Interval: After the first 2 hours—Inspect the auger/impeller cable and adjust it if necessary.

Yearly—Inspect the auger/impeller cable and adjust or replace it if necessary.

1. Loosen the jam nut (Figure 31).
2. Engage the auger/impeller lever and hold it in place (Figure 30).

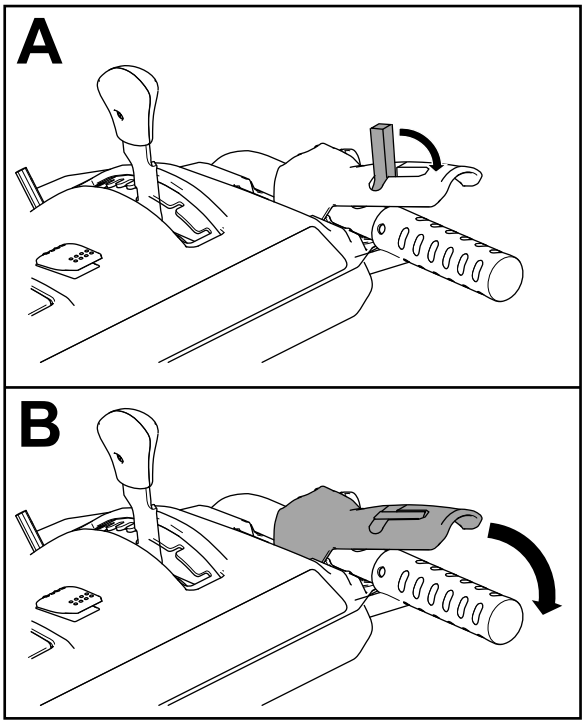

g360687

Figure 30

3. Loosen or tighten the turnbuckle to adjust the spring length to 6.6 cm (2-3/5 inches) as shown in Figure 31.

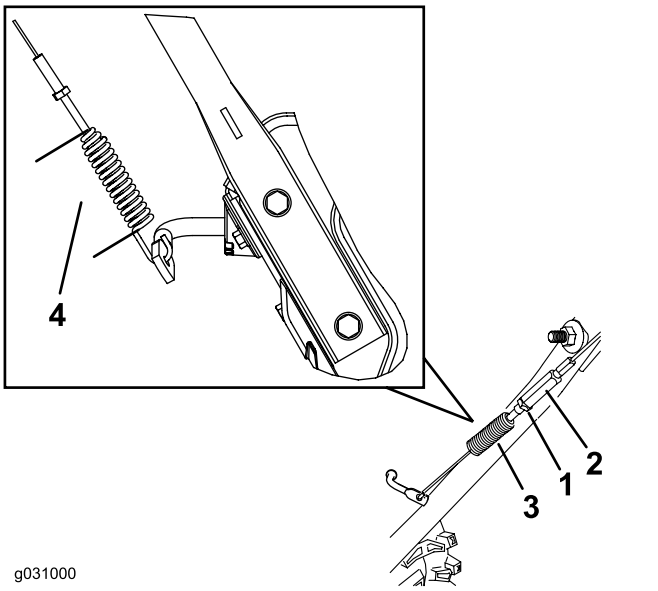

g031000

g031000

Figure 31

1. Turnbuckle
2. Jam nut
3. Spring
4. 6.6 cm (2-3/5 inches) while the auger/impeller lever is held down.

4. Tighten the jam nut (Figure 31), ensuring that there is slight tension on the cable.
5. Turn on the machine and attempt to engage the auger/impeller drive without moving the lock switch back; if the auger rotates, loosen the turnbuckle so that the auger does not engage.
6. If the auger/impeller cable is properly adjusted but a problem remains, contact an Authorized Service Dealer.

Checking the Auger-Gearbox-Oil Level

Service Interval: Yearly—Check the auger-gearbox oil and add oil if necessary.

1. Move the machine to a level surface.
2. Clean the area around the pipe plug (Figure 32).

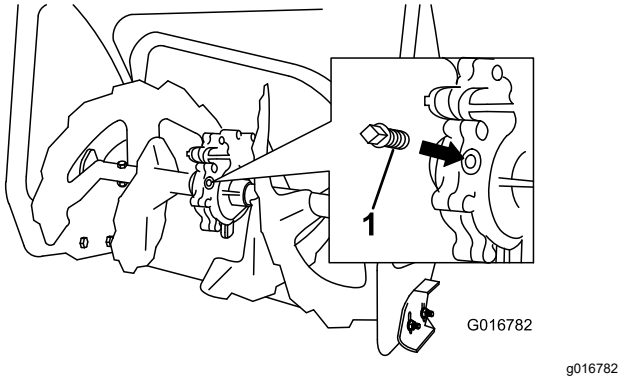

Figure 32

1. Pipe plug

3. Remove the pipe plug from the gearbox.
4. Check the oil level in the gearbox. The oil should be 9.5 mm (3/8 inch) below the filler opening.
5. If the oil level is low, add GL-5 or GL-6, SAE 80-90 EP gear oil lubricant to the gearbox until the oil level is 9.5 mm (3/8 inch) below the filler opening.

   Note: Do not use synthetic oil.
6. Install the pipe plug in the gearbox.

Lubricating the Hex Shaft

Service Interval: Yearly—Lubricate the hex shaft.

Lightly lubricate the hex shaft yearly with automotive engine oil (Figure 33).

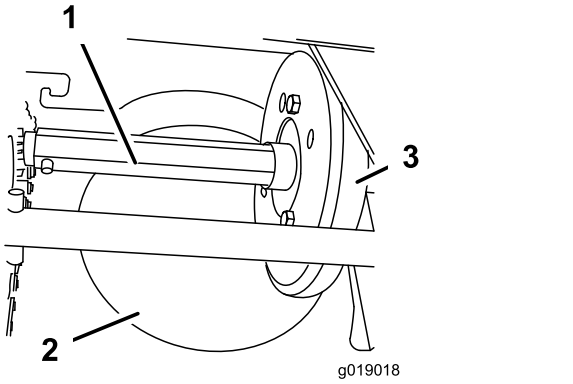

Figure 33

1. Hex shaft
2. Steel friction pulley
3. Rubber wheel

Important: **Do not get oil on the rubber wheel or the steel friction pulley because the traction drive will slip (Figure 33).**

1. Drain the fuel from the fuel tank.
2. Tip the machine forward onto its auger housing and block it so that it cannot fall.
3. Remove the back cover (Figure 34).

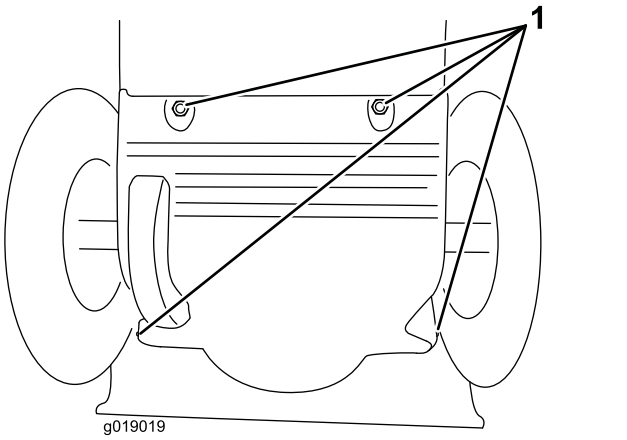

Figure 34

1. Screws

4. Move the speed-selector lever to Position R2.
5. Dip your finger in automotive engine oil and **lightly** lubricate the hex shaft.
6. Move the speed-selector lever to Position 6.
7. Lubricate the other end of the hex shaft.
8. Move the speed-selector lever forward and rearward a few times.
9. Install the back cover and return the machine to the operating position.

Replacing the Drive Belts

If the auger/impeller drive belt or the traction-drive belt becomes worn, oil-soaked, or otherwise damaged, have an Authorized Service Dealer replace the belt.

Storage

Storing the Machine

Important: **Store the machine, battery pack, and charger only in temperatures that are within the appropriate range; refer to Specifications (page 16).**

Important: **If you are storing the battery pack for the off-season, charge it until 2 or 3 LED indicators turn green on the battery. Do not store a fully charged or fully depleted battery. When you are ready to use the machine again, charge the battery pack until the left indicator light turns green on the charger or all 4 LED indicators turn green on the battery.**

- Disconnect the product from the power supply (i.e., remove the plug from the power supply or the battery pack), remove the key, and check for damage after use.
- Clean all foreign material from the product.
- Do not store the tool with the battery pack installed.
- When not in use, store the machine, battery pack, key, and battery charger out of the reach of children.
- Keep the machine, battery pack, key, and battery charger away from corrosive agents, such as garden chemicals and de-icing salts.
- To reduce the risk of serious personal injury, do not store the battery pack outside or in vehicles.
- Touch up chipped surfaces with paint available from an Authorized Service Dealer. Sand affected areas before painting, and use a rust preventative to prevent the metal parts from rusting.
- Tighten all loose screws, bolts, and locknuts. Repair or replace any damaged parts.
- Store the machine, battery pack, key, and battery charger in an enclosed clean, dry area.

Preparing the Battery Pack for Recycling

Important: **Upon removal, cover the terminals of the battery pack with heavy-duty adhesive tape. Do not attempt to destroy or disassemble the battery pack or remove any of its components.**

	Lithium-ion battery packs labeled with the Call2Recycle seal can be recycled at any participating retailer or battery recycling facility in the Call2Recycle program (US and Canada only). To locate a participating retailer or facility closest to you, please call 1-800-822-8837 or visit www.call2recycle.org. If you cannot locate a participating retailer or facility nearby, or if your rechargeable battery is not labeled with the Call2Recycle seal, please contact your local municipality for more information on how to responsibly recycle the battery. If you are located outside of the US and Canada, please contact your authorized Toro distributor.

Troubleshooting

Perform only the steps described in these instructions. All further inspection, maintenance, and repair work must be performed by an authorized service center or a similarly qualified specialist if you cannot solve the problem yourself.

Always remove all batteries from the machine when troubleshooting, inspecting, maintaining, or cleaning the machine.

Problem	Possible Cause	Corrective Action
The machine does not run or does not run continuously.	1. The motor shutoff timeout was reached because the auger was not engaged for an extended period of time.	1. No issue, restart the machine. The machine beeps to indicate that the motor shutoff timeout was reached.
	2. The key was turned from OFF to ON too quickly.	2. Turn the key slower, ensure that the key stops briefly in the middle ACCESSORY position.
	3. The battery pack is low on charge.	3. Charge the battery pack.
	4. The battery pack is not fully seated.	4. Ensure that the battery pack is inserted all the way into the housing and latched in place.
	5. The battery pack is over or under the appropriate temperature range.	5. Move the battery pack to a place where it is dry and the temperature is between 5°C (41°F) and 40°C (104°F).
	6. The battery pack has exceeded high amperage limits.	6. Cycle the key to the OFF position.
	7. There is moisture on the leads of the battery pack.	7. Allow the battery pack to dry or wipe it dry.
	8. The battery pack is damaged.	8. Replace the battery pack.
	9. There is another electrical problem with the machine.	9. Contact an Authorized Service Dealer.
The machine does not reach full power.	1. The battery pack charge capacity is too low.	1. Remove the battery pack from the machine and fully charge the battery pack.
	2. The air vents are blocked.	2. Clean the air vents.
The machine is producing a beeping sound.	1. The motor shutoff timeout was reached because the auger was not engaged for an extended period of time.	1. No issue, restart the machine. The machine beeps to indicate that the motor shutoff timeout was reached.
	2. The battery pack is low on charge.	2. Charge the battery pack.
	3. The machine is overloaded.	3. Walk at a slower pace while clearing snow or break up a large pile of snow before clearing it.
	4. There is another electrical problem with the machine.	4. Attempt the other troubleshooting actions, if the alarm still sounds, contact an Authorized Service Dealer.

Problem	Possible Cause	Corrective Action
The machine runs, but the machine discharges snow poorly or not at all.	1. You are trying to remove too much snow per swath. 2. You are trying to remove extremely heavy or wet snow. 3. The discharge chute is plugged. 4. The auger/impeller drive belt is loose or is off the pulley. 5. The auger drive belt is worn or broken. 6. You are using the machine in ECO mode in heavy conditions.	1. Reduce the amount of snow removed per swath. 2. Do not overload the machine with extremely heavy or wet snow. 3. Unclog the discharge chute. 4. Install and/or adjust the auger/impeller drive belt; refer to www.Toro.com for servicing information or take the machine to an Authorized Service Dealer. 5. Replace the auger drive belt; refer to www.Toro.com for servicing information or take the machine to an Authorized Service Dealer. 6. Verify that ECO mode is not engaged in heavy conditions.
The discharge chute either does not lock into place or does not move.	1. The discharge-chute latch cable is not properly adjusted.	1. Adjust the discharge-chute latch cable.
The machine does not properly clear the snow off the surface.	1. The skids and/or scraper are not properly adjusted. 2. The pressure in the tires is not equal.	1. Adjust the skids and/or the scraper. 2. Check and adjust the pressure in 1 or both tires.
The LED battery charge light on the powerhead is red.	1. The battery temperature and/or voltage outside of operating range.	1. Verify the battery condition and charge level with charger.
The battery pack loses charge quickly.	1. The battery pack is over or under the appropriate temperature range. 2. The machine is overloaded.	1. Move the battery pack to a place where it is dry and the temperature is between 5°C (41°F) and 40°C (104°F). 2. Push the machine with less force.
The battery charger is not working.	1. The battery charger is over or under the appropriate temperature range. 2. The outlet that the battery charger is plugged into does not have power.	1. Unplug the battery charger and move it to a place where it is dry and the temperature is between 5°C (41°F) and 40°C (104°F). 2. Contact your licensed electrician to repair the outlet.
The LED indicator light on the battery charger is red.	1. The battery charger and/or battery pack is over or under the appropriate temperature range.	1. Unplug the battery charger and move the battery charger and battery pack to a place where it is dry and the temperature is between 5°C (41°F) and 40°C (104°F).
The LED indicator light on the battery charger is blinking red.	1. There is an error in the communication between the battery pack and the charger. 2. The battery pack is weak.	1. Remove the battery pack from the battery charger, unplug the battery charger from the outlet, and wait 10 seconds. Plug the battery charger into the outlet again and place the battery pack on the battery charger. If the LED indicator light on the battery charger is still blinking red, repeat this procedure again. If the LED indicator light on the battery charger is still blinking red after 2 attempts, contact your authorized service dealer if the battery is in warranty, or properly dispose of the battery pack at a battery recycling facility. 2. Contact your authorized service dealer if the battery is in warranty, or properly dispose of the battery pack at a battery recycling facility.

California Proposition 65 Warning Information

What is this warning?

You may see a product for sale that has a warning label like the following:



WARNING: Cancer and Reproductive Harm—www.p65Warnings.ca.gov.

What is Prop 65?

Prop 65 applies to any company operating in California, selling products in California, or manufacturing products that may be sold in or brought into California. It mandates that the Governor of California maintain and publish a list of chemicals known to cause cancer, birth defects, and/or other reproductive harm. The list, which is updated annually, includes hundreds of chemicals found in many everyday items. The purpose of Prop 65 is to inform the public about exposure to these chemicals.

Prop 65 does not ban the sale of products containing these chemicals but instead requires warnings on any product, product packaging, or literature with the product. Moreover, a Prop 65 warning does not mean that a product is in violation of any product safety standards or requirements. In fact, the California government has clarified that a Prop 65 warning "is not the same as a regulatory decision that a product is 'safe' or 'unsafe.'" Many of these chemicals have been used in everyday products for years without documented harm. For more information, go to https://oag.ca.gov/prop65/faqs-view-all.

A Prop 65 warning means that a company has either (1) evaluated the exposure and has concluded that it exceeds the "no significant risk level"; or (2) has chosen to provide a warning based on its understanding about the presence of a listed chemical without attempting to evaluate the exposure.

Does this law apply everywhere?

Prop 65 warnings are required under California law only. These warnings are seen throughout California in a wide range of settings, including but not limited to restaurants, grocery stores, hotels, schools, and hospitals, and on a wide variety of products. Additionally, some online and mail order retailers provide Prop 65 warnings on their websites or in catalogs.

How do the California warnings compare to federal limits?

Prop 65 standards are often more stringent than federal and international standards. There are various substances that require a Prop 65 warning at levels that are far lower than federal action limits. For example, the Prop 65 standard for warnings for lead is 0.5 µg/day, which is well below the federal and international standards.

Why don't all similar products carry the warning?

- Products sold in California require Prop 65 labelling while similar products sold elsewhere do not.
- A company involved in a Prop 65 lawsuit reaching a settlement may be required to use Prop 65 warnings for its products, but other companies making similar products may have no such requirement.
- The enforcement of Prop 65 is inconsistent.
- Companies may elect not to provide warnings because they conclude that they are not required to do so under Prop 65; a lack of warnings for a product does not mean that the product is free of listed chemicals at similar levels.

Why does Toro include this warning?

Toro has chosen to provide consumers with as much information as possible so that they can make informed decisions about the products they buy and use. Toro provides warnings in certain cases based on its knowledge of the presence of one or more listed chemicals without evaluating the level of exposure, as not all the listed chemicals provide exposure limit requirements. While the exposure from Toro products may be negligible or well within the "no significant risk" range, out of an abundance of caution, Toro has elected to provide the Prop 65 warnings. Moreover, if Toro does not provide these warnings, it could be sued by the State of California or by private parties seeking to enforce Prop 65 and subject to substantial penalties.