Air Fryer Oven

User Manual

Model No.: GTO23PB

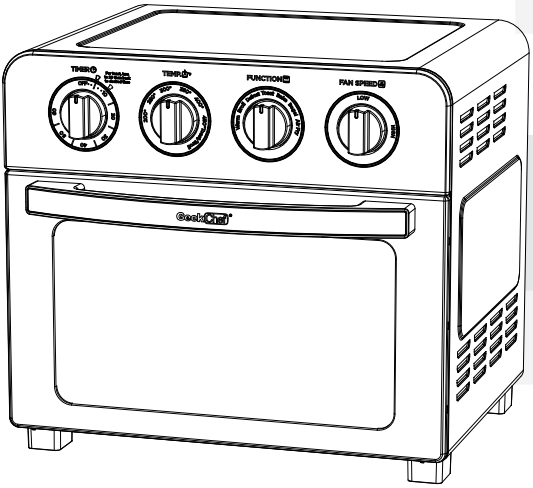

Toll Free: 1-844-801-8880

IMPORTANT: This Product is an electric heating appliance. For your safety and convenience in operation, please read this Manual carefully and follow the steps required. Please keep this Manual properly for future reference.

TABLE OF CONTENTS

Safety Instructions	**2**
Product Components	**4**
How To Use	**6**
Cleaning And Maintenance	**9**
Troublshooting	**10**
Limited Warranty	**11**

TECHNICAL SPECIFICATIONS

Model :	GTO23PB
Rated Voltage :	120V 60Hz
Rated Power :	1700W
Oven Capacity :	23L / 24QT
N.W. :	8.6KGS/18.9LBS
Product Dimension :	410x385x350(mm)/16.1x15.2x13.8(inch)

Scan the QR code for more assistance and support.

IMPORTANT SAFEGUARDS

When using an electrical appliance, basic safety precautions should always be followed, including the following:

1. Read all instructions.
2. UNPLUG FROM OUTLET WHEN NOT IN USE AND BEFORE CLEANING. Allow to cool before cleaning or handling, putting on or taking off parts.
3. **Do not** touch hot surfaces. Use handles or knobs.
4. To protect against electrical shock, do not place any part of the Air Fryer Countertop Oven in water or other liquids. See instructions for Cleaning and Maintenance.
5. This appliance should not be used by or near children or individuals with certain disabilities.
6. **Do not** operate any appliance with a damaged cord or plug, or after the appliance has malfunctioned or has been dropped or damaged in any way or is not operating properly. Return the Air Fryer Countertop Oven to the store or retailer where purchased for examination or repair, or replacement.
   The use of accessory attachments not recommended may cause injury.
7. **Do not** use outdoors.
8. **Do not** let cord hang over the edge of the table or countertop, where it could be pulled on inadvertently by children or pets, or touch hot surfaces, which could damage the cord.
9. **Do not** place this Air Fryer Countertop Oven on or near a hot gas or electric burner or in a heated oven.
10. **Do not** use this Air Fryer Countertop Oven for anything other than its intended purpose.
11. Extreme caution should be exercised when using containers constructed of materials other than metal or glass in the oven.
12. To avoid burns, use extreme caution when removing Air Fryer Countertop Oven accessories or disposing of hot grease.
13. When not in use, always unplug the unit. **Do not** store any materials other than manufacturer's recommended ovenproof accessories in this Air Fryer Countertop Oven.
14. **Do not** place any of the following materials in the Air Fryer Countertop Oven: paper, cardboard, plastic and similar products.
15. **Do not** cover Crumb Tray or any part of the oven with metal foil. This will cause overheating of the oven.
16. Oversize foods, metal foil packages and utensils must not be inserted in the
17. Air Fryer Countertop Oven, as they may involve a risk of fire or electric shock.
18. A fire may occur if the Air Fryer Oven is covered or touching flammable materials such as curtains, draperies or walls, when in operation. **Do not** store any items on top of the appliance when in operation. **Do not** operate under wall cabinets.

19. **Do not** clean with metal scouring pads. Pieces can break off the pad and touch electrical parts, involving a risk of electric shock.
20. **Do not** attempt to dislodge food when the Air Fryer Countertop Oven is plugged into the electrical outlet.
21. Warning: To avoid possibility of fire, NEVER leave Air Fryer Countertop Oven unattended during use.
22. **Do not** rest cooking utensils or baking dishes on glass door.
23. **Do not** operate your appliance in an appliance garage or under a wall cabinet. When storing in an appliance garage, always unplug the unit from the electrical outlet. Not doing so could create a risk of fire, especially if the appliance touches the walls of the garage or the door touches the unit as it closes.
24. Extreme caution must be used when moving an appliance containing hot oil or other hot liquids.
25. To disconnect, turn the control knobs to "OFF" position, then remove plug from the wall outlet.

SAVE THESE INSTRUCTIONS

Please read and keep these instructions handy. These instructions will help you use your Air Fryer Countertop Oven to its fullest so that you will achieve consistent, professional results.

SPECIAL CORD SET INSTRUCTIONS

A short power-supply cord is provided to reduce the risks resulting from becoming entangled in or tripping over a longer cord. Extension cords are available and may be used if care is exercised in their use. If an extension cord is used,

1. The marked electrical rating of the extension cord must be at least as great as the electrical rating of the appliance.
2. The longer cord should be arranged so that it will not drape over the countertop or tabletop, where it can be tripped over unintentionally or pulled on by children.

FOR HOUSEHOLD USE ONLY
NOT INTENDED FOR COMMERCIAL USE

PRODUCT COMPONENTS

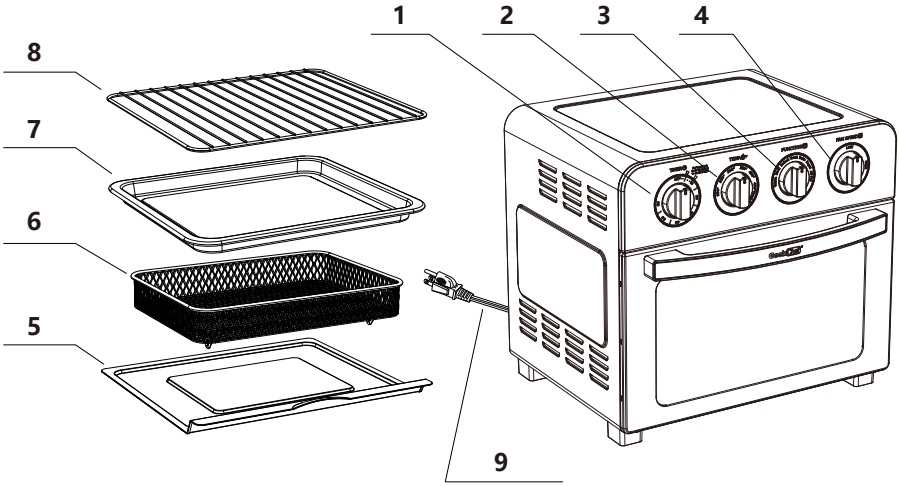

1.Timer Dial	6.Airfryer Basket
2.Temperature Dial	7.Baking Pan
3.Function Dial	8.Oven Rack
4.Fan Speed Selection Dial	9.Power Plug
5.Crumb Tray	

1.Timer Dial
Use to set the desired time for all functions. Setting the over timer, powers the unit on and begins the cooking cycle. When the times runs out, the unit will power off.

2.Temperature Dial
Use to set the desired temperature.

3.Function Dial
Use to select the cooking function-Warm\Broil\Defrost\ Toast\ Bake\ Bagel\Air Fry.

4.Fan Speed Selection Dial
Use to adjust the Fan Speed

PRODUCT COMPONENTS

5.Crumb Tray
Always ensure that the removable Crumb Tray is placed underneath the bottom heating elements whenever the oven is being used.

6.Air Fryer Basket
The Air Fryer Basket is grated to allow air to pass through the basket for even cooking. The Air Fryer Basket can only be used in conjunction with either the Baking/Drip Pan or on the Wire Rack. The Air Fryer Basket should be placed in the middle rack position unless a recipe states otherwise.

7.Baking Pan
The Baking Pan can be placed in any of the three rack positions.

8.Oven Rack
The oven rack can be used in three rack positions, bottom, middle, and top. See “Oven Rack/Pan Position” section in the manual. Generally, the top position should be used for Broil, the middle for Air Fry and Toast,and the bottom for bake.

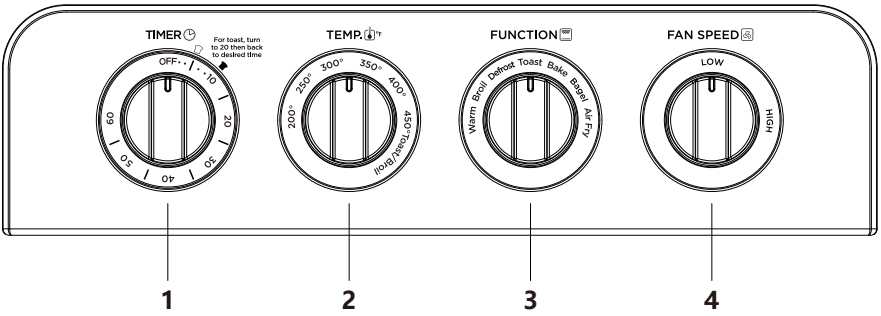

1.Timer Dial 2.Temperature Dial 3.Function Dial 4.Fan Speed selection Dial

HOW TO USE

OPERATION INSTRUCTIONS FOR ACCESSORIES

1. Place your Air Fryer Countertop Oven on a flat surface. Before using your Air Fryer Countertop Oven, move it 4 inches away from the wall or from any objects on the countertop. Do not use on heat-sensitive surfaces.

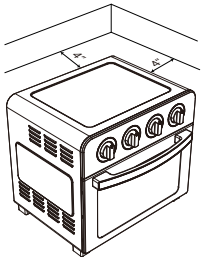

2. Crumb Tray
   Opening front door, put crumb tray into the unit according to the directions shown in the picture below:

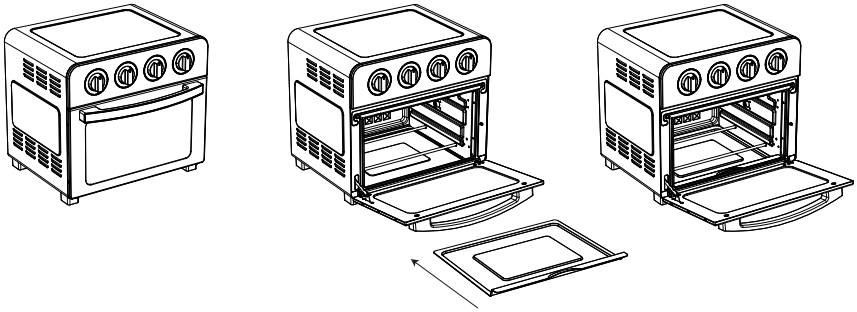

3. Bake Tray
   Put the food into the bake tray and put it into the cooking chamber, and then close the door.

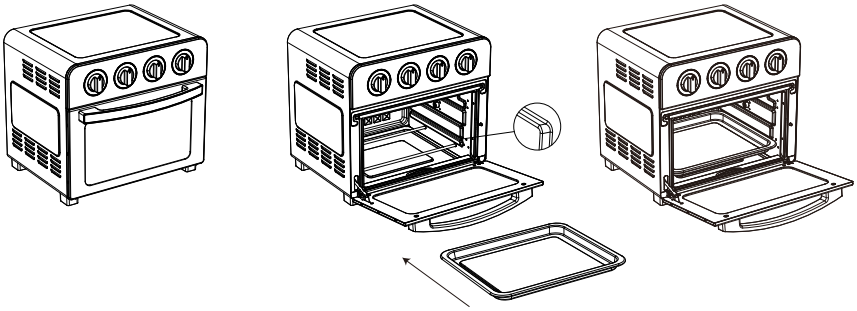

4. Oven Rack

Insert the oven rack into the unit according to the directions shown in the picture below:

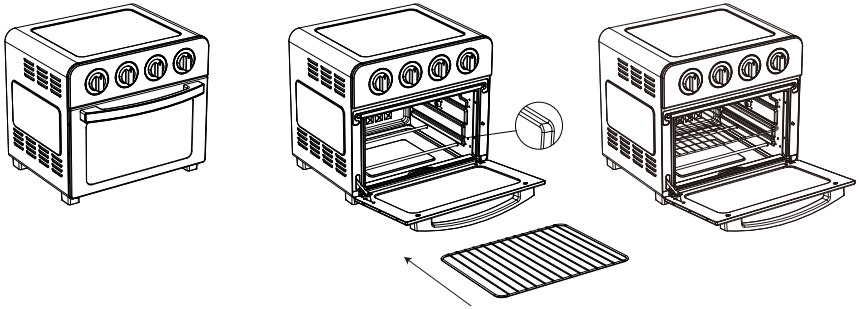

5.Air Fry Basket

Insert the oven rack into the unit, then put the food into the mesh basket and put it on the rack.

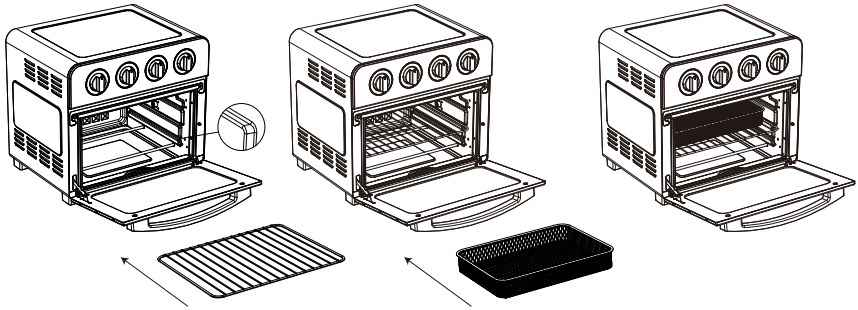

Note : * Air fry basket must be used with the oven rack.

* Choose proper accessories for different cooking purpose.
* Please use oven mitts to take out the crumb tray, bake tray, oven rack and air fryer basket etc. after cooking finished.
* Please always keep the crumb tray on the bottom of the cooking chamber for gathering oil from the fried food.

HOW TO USE

Before First Use

1. Remove all packaging materials, stickers and labels.
2. Clean all the accessories with hot water, cleaning agent and a non-abrasive sponge
3. Wipe the inside and outside of the appliance with a damp cloth.

Note : * Objects should not be stored on the top of the oven.
* The exterior housing will get very hot when in use, keep out of reach of children.
*** Only when the door is closed completely, the machine can work properly. If not, oven will not work.**

Oven Rack / Pan Positions

Oven have 3 rack/pan positions: Position 1 (bottom), Position 2 (middle), position 3 (top). Usually suggested put over rack or pan in position 2 (middle) for best cooking result.

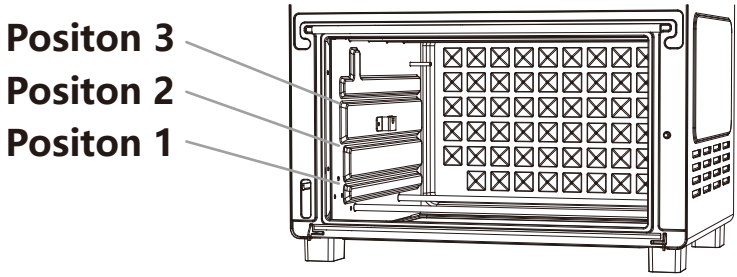

OPERATIONS

Unwind the power cord. Check that the Crumb Tray is in place and that there is nothing in the oven. Plug power cord into the wall outlet.

CLEANING AND MAINTENANCE

1. Unplug your Air Fryer Countertop Oven and allow it to completely cool before cleaning. **Do not** use abrasive cleaners, as they will damage the finish. Simply wipe the exterior with a clean, damp cloth and dry thoroughly. Apply the cleaning agent to a cloth, not directly onto the Air Fryer Countertop Oven. **Do not** use excess pressure when cleaning the area of the control panel as it could cause the text to be removed over time.

2. To clean the interior walls and bottom of the oven (remove the Crumb Tray first) use a damp soapy cloth or sponge. Never use harsh abrasives or corrosive products including oven cleaner sprays. These could damage the oven surface. Never use steel wool pads on the Air Fryer Countertop Oven or accessories.

3. The Oven Rack, Baking/Drip Pan, Air Fryer Basket and Crumb Tray should be hand-washed in hot, sudsy water or use a nylon scouring pad or nylon brush. These parts are not dishwasher safe.

4. Always clean the Crumb Tray after each use. Excess food particles could cause smoking and will be hard to remove from tray. To remove baked-on grease or burnt food particles you can soak the Crumb Tray in hot, sudsy water or use nonabrasive cleaners. Never operate the oven without the Crumb Tray in place.

5. The top interior of the Air Fryer Countertop Oven should be cleaned to remove excess grease that may accumulate after cooking greasy foods. Doing so will prevent smoking in the oven during subsequent uses.

TROUBLESHOOTING

PROBLEM	POSSIBLE SOLUTION
The oven will not turn on.	• Make sure the oven is plugged in.
Foods are not completely cooked.	• Increase cooking temperature or time.
Foods are overcooked or burned.	• Decrease cooking temperature or time. • Make sure food items are not too large and are not touching the heating elements.
Foods are cooked unevenly.	• Preheat the oven • Make sure food items are not too closely packed into a tray, rack or other container.
White smoke is coming out of the oven.	• The oven may produce some white smoke when you use it for the first time. This is normal. • Excess oil or fatty foods may produce white smoke. Make sure the inside of the oven is cleaned properly and not greasy.
Black smoke is coming out of the oven.	• Immediately turn off the oven and then unplug it. Cool the oven to room temperature. Wait for smoke to clear before opening the oven door or pulling out the tray, basket or rack.

LIMITED WARRANTY

Geek Technology Ltd. warrants to the original consumer or purchaser this Geek Chef Air Fryer Oven is free from defects in material or workmanship for a period of One (1) year from the date of purchase. If any such defect is discovered within the warranty period, Geek Technology Ltd. at its discretion, will repair or replace the Product at no cost. This limited warranty is good only to the original purchaser of the product and effective only when used in United States.

For warranty or repair service: Call 1-844-801-8880 and choose the appropriate prompt, or email info@geektechnology.com. Please have your Product's model number, date code(on rating label), your name, address, city, state, zip code and phone number ready.

NO OTHER WARRANTY IS APPLICABLE TO THIS PRODUCT. THIS WARRANTY IS IN LIEU OF ANY OTHER WARRANTY, EXPERSS OR IMPLIED. INCLUDING WITHOUT LIMITATION, ANY WARRANTY OF MERCHANTABILITY OR FITNESS FOR A PARTICULAR PURPOSE. TO THE EXTENT ANY IMPLIED WARRANTY IS REQUIRED BY LAW. IT IS LIMITED IN DURATION TO THE EXPRESS WARRANTY PERIOD ABOVE. NEITHER THE MANUFACTURER NOR ITS U.S.DISTRIBUTOR SHALL BE LIABLE FOR ANY INCIDENTAL, CONSEQUENTIAL, INDI RECT, SPECIAL, OR PUNITIVE DAMAGES OF ANY NATURE. INCLUD ING WITHOUT LIMITATION. LOST REVE- NUES OR PROFITS, OR ANY OTHER DAMAGE WHETHER BASED IN CONTRACT, TORT, OR OTH ERWISE, SOME STATES AND/OR TERRITORIES DO NOT ALLOW THE EXCLUSION OR LIMITATION OF INCIDENTAL OR CONSEQUENTIAL DAMAGES OR LIMITATIONS ON HOW LONG AN IMPLIED WARRANTY LASTS. SO THE ABOVE EXCLUSION OR LIMITATION MAY NOT APPLY TO YOU. THIS WARRANTY GIVES YOU, THE ORIGINAN PURCHASER, SPECIFIC LEGAL RIGHTS AND YOU MAY ALSO HAVE OTHER RIGHTS THAT VARY FROM STATE TO STATE OR TERRITORY TO TERRITORY.

THIS LIMITED WARRANTY DOES NOT APPLY TO :

1. Failure of product to perform during power failures and interruptions or inadequate electrical service.
2. Damage caused to the product by accident, vermin, lightning, winds, fire, floods, or acts of God.
3. Damage resulting from accident, alteration, misuse, abuse, or improper installation, repair, or maintenance. Improper use includes using an external device that alters or converts the voltage or frequency of electricity.
4. Any unauthorized product modification, repair by unauthorized repair center, or use of non-approved replacement parts.
5. Abnormal cleaning and maintenance as described in the user's manual.
6. Use of accessories or components that are not compatible with this product.
7. The cost of repair or replacement under these excluded circumstances shall be borne by the consumer.

Geek Technology Ltd.
1275 Bloomfield Ave
Fairfield, NJ 07004
Toll Free 1-844-801-8880

Version：--2021.5.0