AC INFINITY

CLOUDLAB SERIES

HEAVY-DUTY GROW TENT

USER MANUAL

WELCOME

Thank you for choosing AC Infinity. We are committed to product quality and friendly customer service. If you have any questions or suggestions, please don't hesitate to contact us. Visit www.acinfinity.com and click contact for our contact information.

EMAIL
support@acinfinity.com

WEB
www.acinfinity.com

LOCATION
Los Angeles, CA

PRODUCT	MODEL	UPC-A
CLOUDLAB 422	AC-CBA422	819137021532
CLOUDLAB 632	AC-CBA632	819137021556
CLOUDLAB 642	AC-CBA642	819137021549
CLOUDLAB 733	AC-CBA733	819137021563
CLOUDLAB 844	AC-CBA844	819137021570
CLOUDLAB 866	AC-CBA866	819137021587

MANUAL INDEX

Manual Index ..... Page 5

Key Features ..... Page 6

Product Contents ..... Page 7

Tent Set Up ..... Page 9

Mounting Guide ..... Page 15

Ventilation Guide ..... Page 16

Other AC Infinity Products ..... Page 17

Warranty ..... Page 18

KEY FEATURES

HIGH-DENSITY CANVAS

Mylar canvas with 2000D density rating to be 100% external light-proof. Diamond-patterned interior lining amplifies reflectivity.

VIEWING WINDOW

Clear and adjustable window offers you a snapshot of the interior without compromising your environment.

CONTROLLER PLATE

Aluminum plate designed to mount fan and lighting controllers. Their cords can enter the tent securely through the plate's opening.

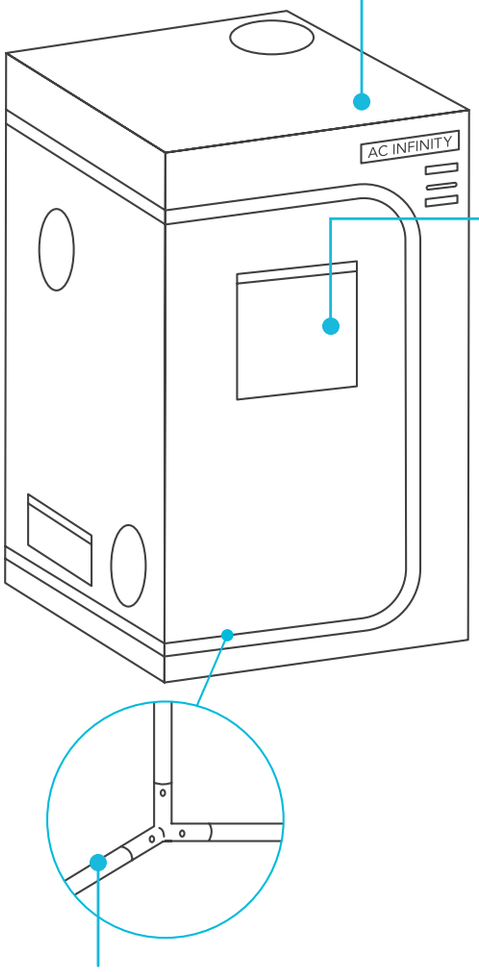

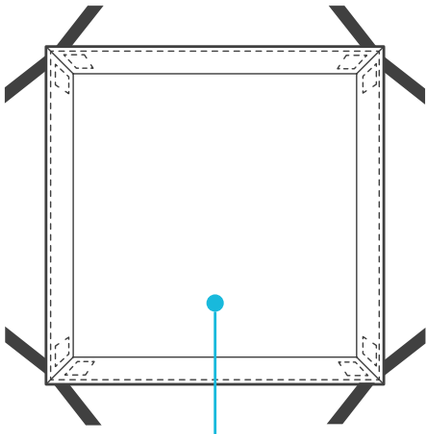

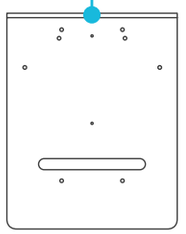

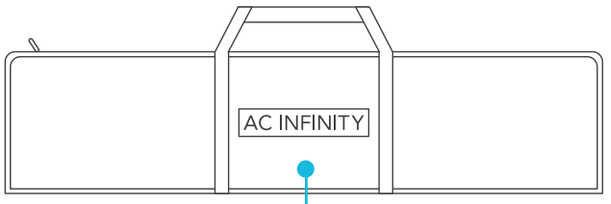

HEAVY-DUTY FRAME

Thick 22mm steel tubes and connectors provide the tent with a sturdy structure. Can carry fans and lights up to 100 pounds.

SPILL TRAY

Reflective waterproof lining that catches water, soil, and other debris to prevent leakage in the grow tent.

STORAGE BAG

Includes a heavy-duty nylon carrying bag to neatly store the grow tent when not in use and allow easy transporting.

PRODUCT CONTENTS

CLOUDLAB SERIES Included in all series

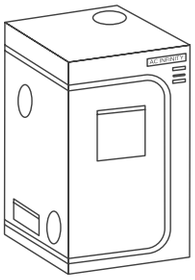

CANVAS TENT
(x1)

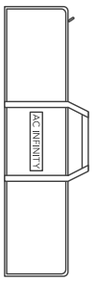

STORAGE BAG
(x1)

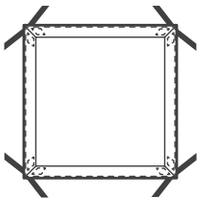

SPILL TRAY
(x1)

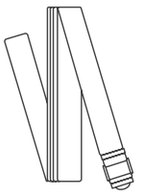

FILTER STRAPS
(x2)

CONTROLLER SCREWS
(x10)

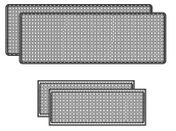

CONTROLLER VELCRO
(x6)

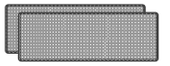

INNER FLAP VELCRO
(x2)

CLOUDLAB SERIES Included only with

CLOUDLAB 844 AC-CBA844
CLOUDLAB 866 AC-CBA866

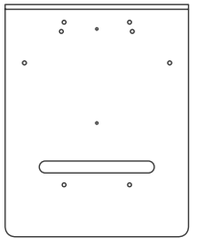

CONTROLLER PLATE
(x1)

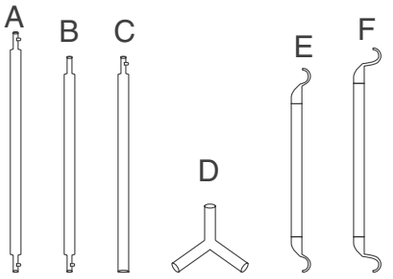

x8 x4 x4 x8 x1 x2

FRAME POLES

PRODUCT CONTENTS

CLOUDLAB SERIES Included only with

CLOUDLAB 422 AC-CBA422
CLOUDLAB 733 AC-CBA733

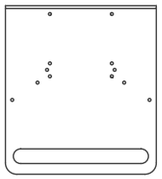

CONTROLLER PLATE (*SHORT) (x1)

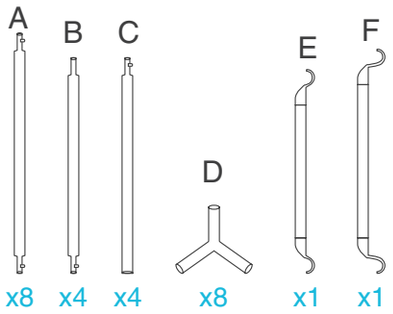

FRAME POLES

CLOUDLAB SERIES Included only with

CLOUDLAB 632 AC-CBA632

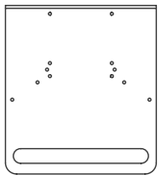

CONTROLLER PLATE (*SHORT) (x1)

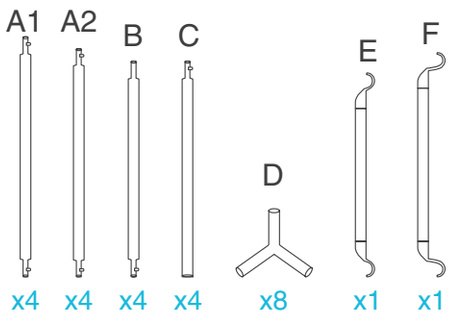

FRAME POLES

CLOUDLAB SERIES Included only with

CLOUDLAB 642 AC-CBA642

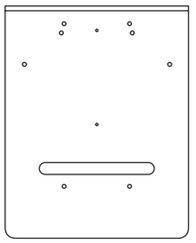

CONTROLLER PLATE (x1)

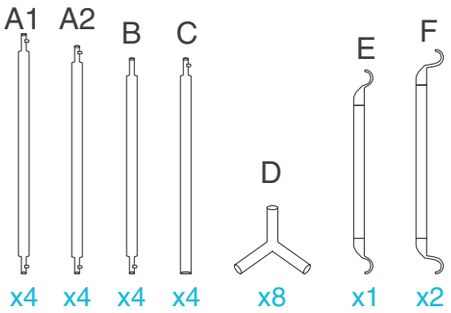

FRAME POLES

TENT SETUP

STEP 1

Insert the eight (A) poles into the floor end of the corner (D) pieces to create two bases. When assembling, make sure the feet of each corner (D) piece faces the floor with the arrow facing down.

NOTE: The poles in models AC-CBA632 and AC-CBA642 are labeled A1 and A2.

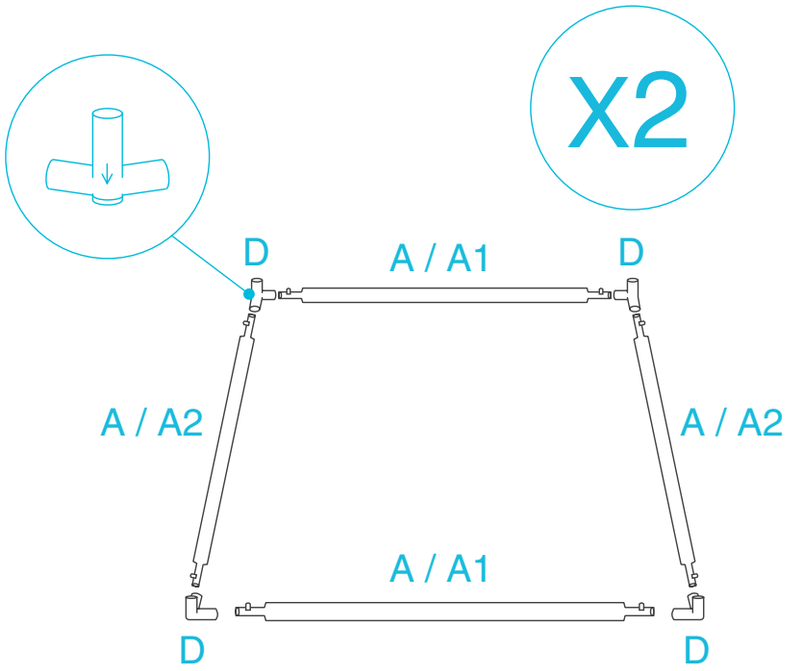

STEP 2

Insert the four (B) poles into Base One. Insert the four (C) poles into Base Two.

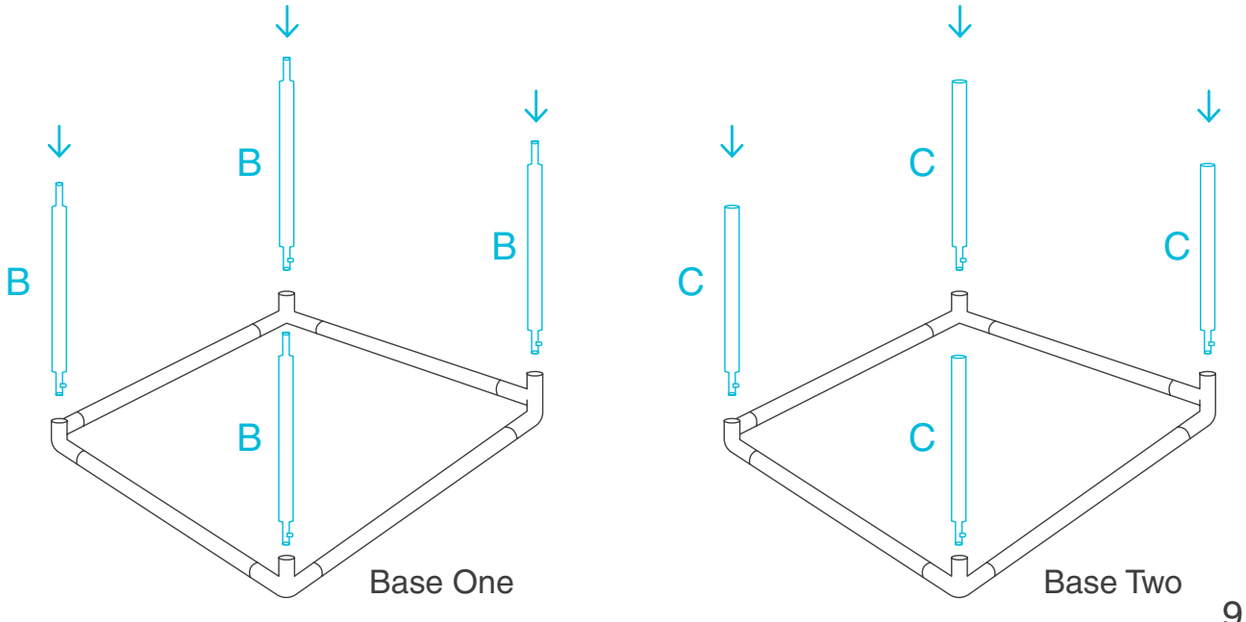

TENT SETUP

STEP 3

Unzip the tent so that three of the walls lay flat.

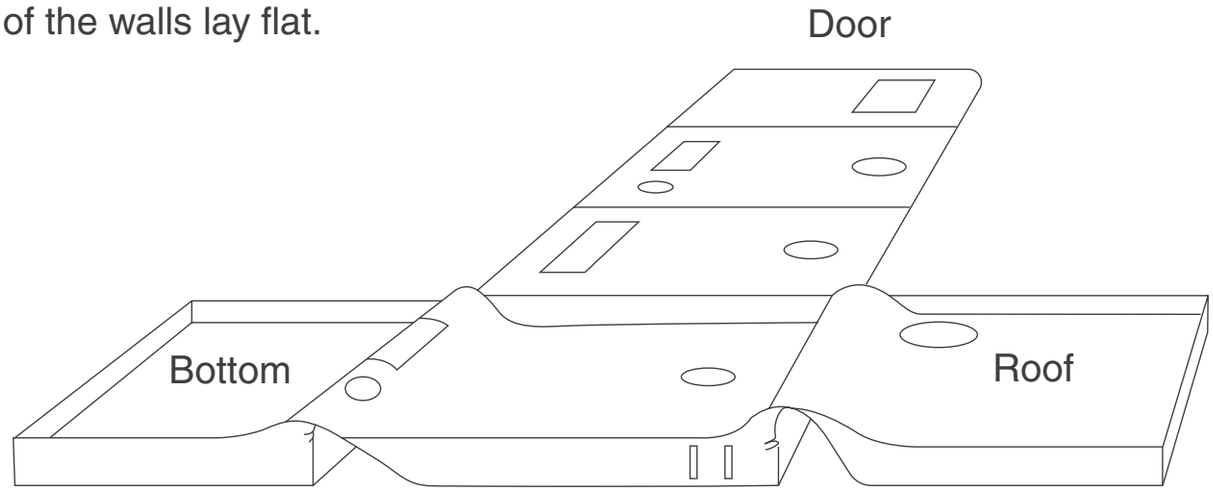

STEP 4

Guide Base One into the floor of the tent,
making sure its corners meet the tent's corners.

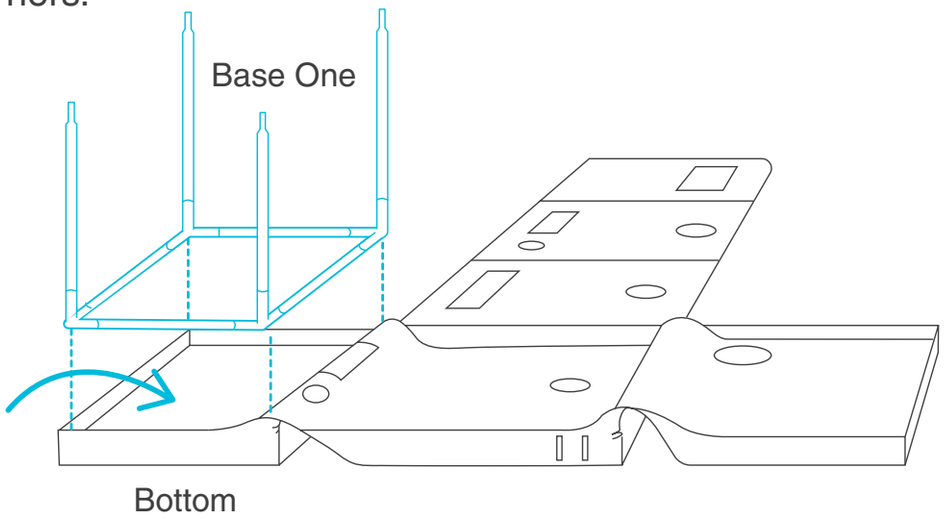

TENT SETUP

STEP 5

Insert the poles of Base Two into the poles of Base One to complete the frame.

*Two people is recommended for this portion of the tent assembly.

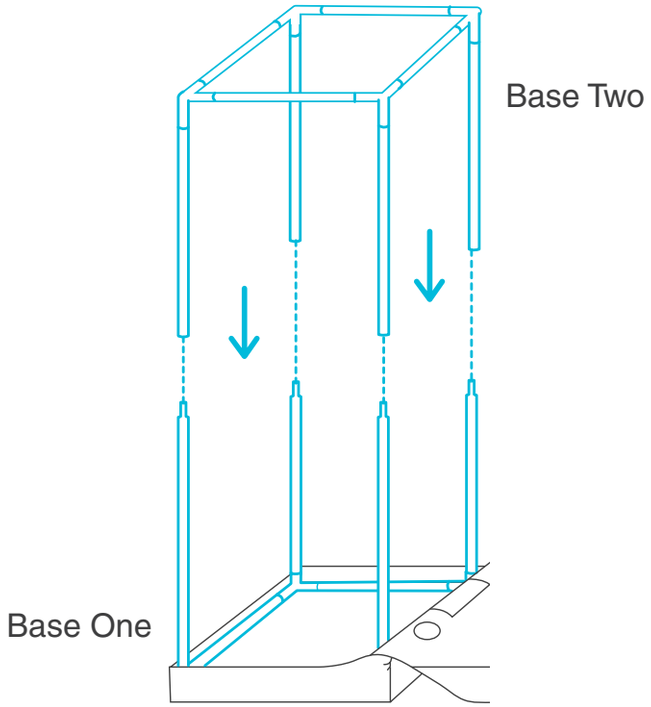

STEP 6

Pull the roof over the assembled frame.

*Two people is recommended for this portion of the tent assembly.

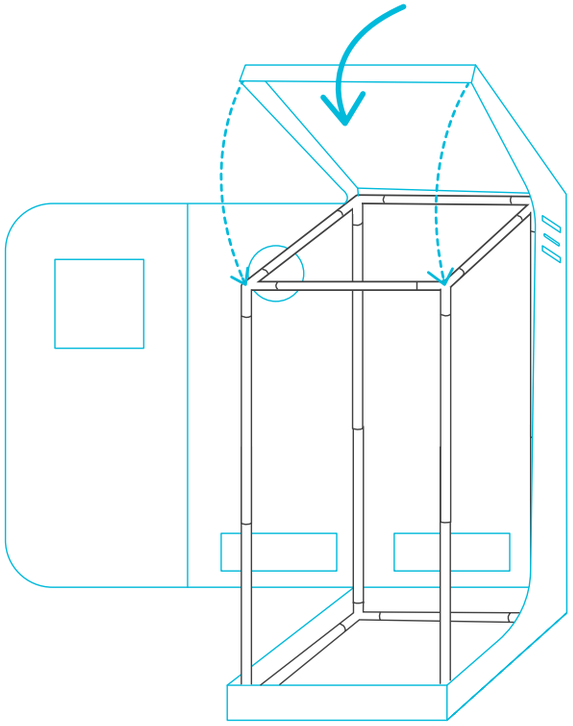

TENT SETUP

STEP 7

Pull the upper and lower zippers to close the walls and door.

*Two people is recommended for this portion of the tent assembly.

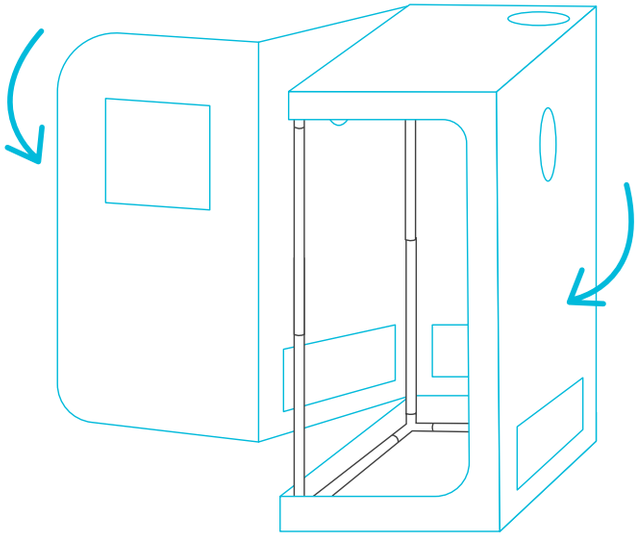

STEP 8

You can neatly hold the window wall open any time by using its attached Velcro strap.

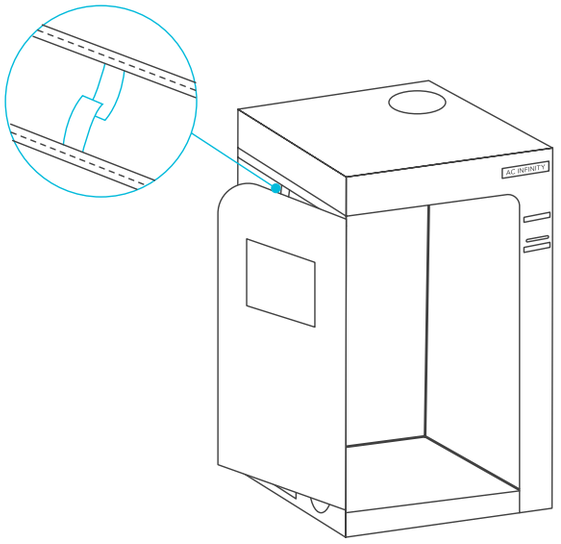

TENT SETUP

STEP 9

Add the roof support beams (E) then (F). Insert the spill pool into the tent and secure the Velcro straps around the poles.

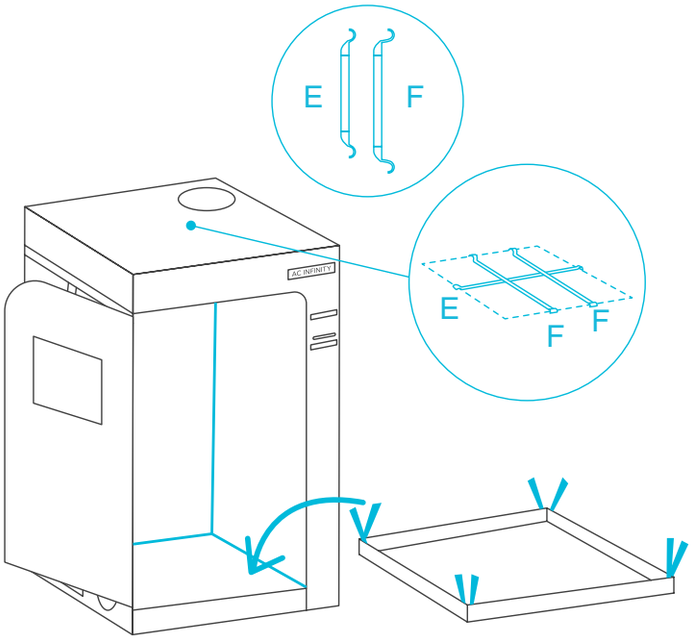

STEP 10

Mount your controller onto the included bracket.

Use the included screws to mount an AC Infinity controller. Use the Velcro adhesive to attach a non-AC Infinity controller.

Refer to page 15 for mounting locations of your controller.

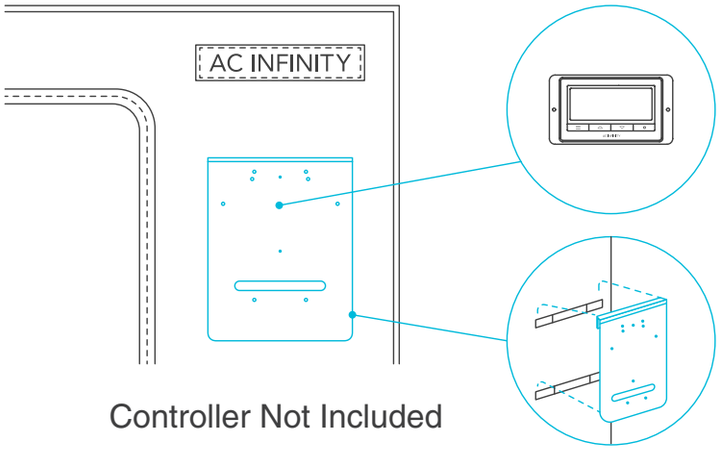

Controller Not Included

TENT SETUP

STEP 11

Slide the controller bracket assembly into the tent straps below the logo.

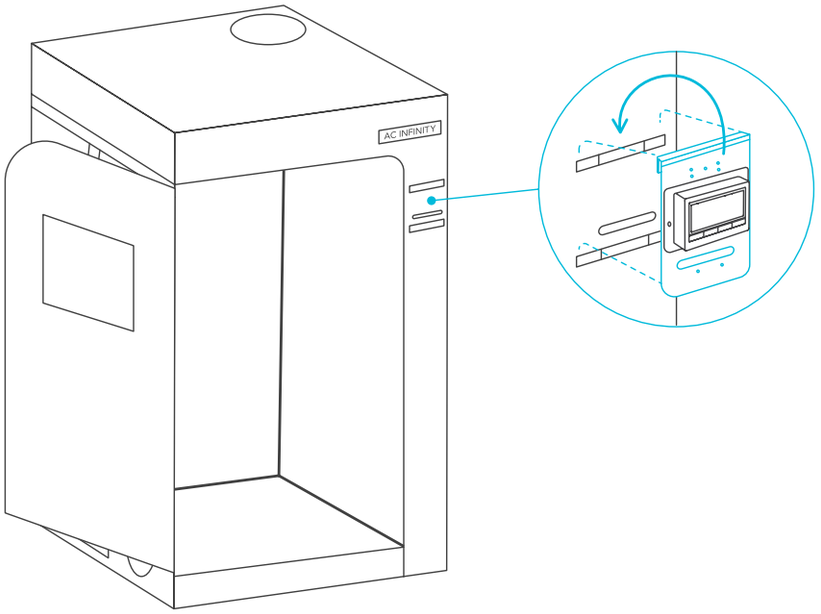

STEP 12

Route your inline duct fan's power connector through the opening inside and plug it into your controller.

Plug the probe into the controller and route its cables through the opening.

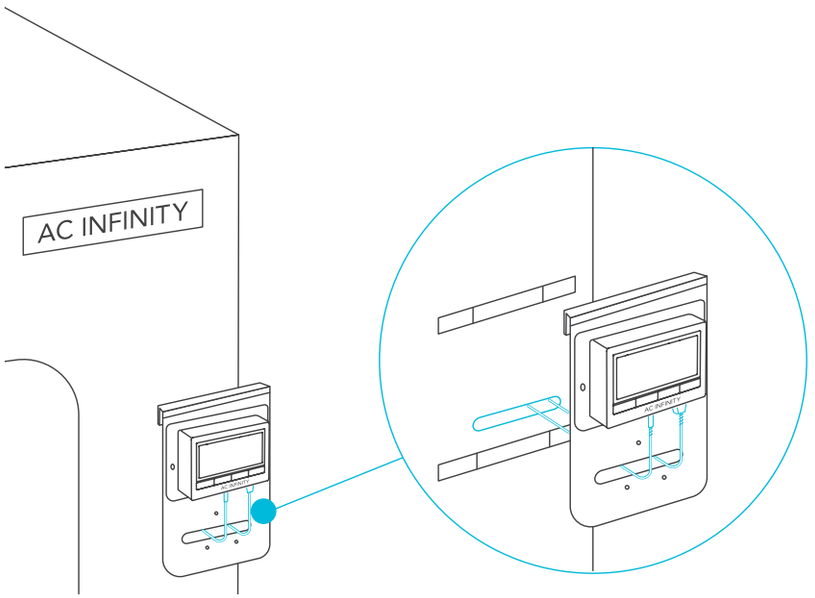

MOUNTING GUIDE

CONTROLLER PLATE

This grow tent includes an aluminum bracket with mounting holes bored for AC Infinity controllers. Mount your controller to the corresponding holes on the bracket. Route its wires through the oval opening and through the grow tent's flap.

To attach non-AC Infinity controllers, use the included Velcro adhesive to hold it onto the bracket.

ONLY INCLUDED WITH

CLOUDLAB 642
CLOUDLAB 844
CLOUDLAB 866

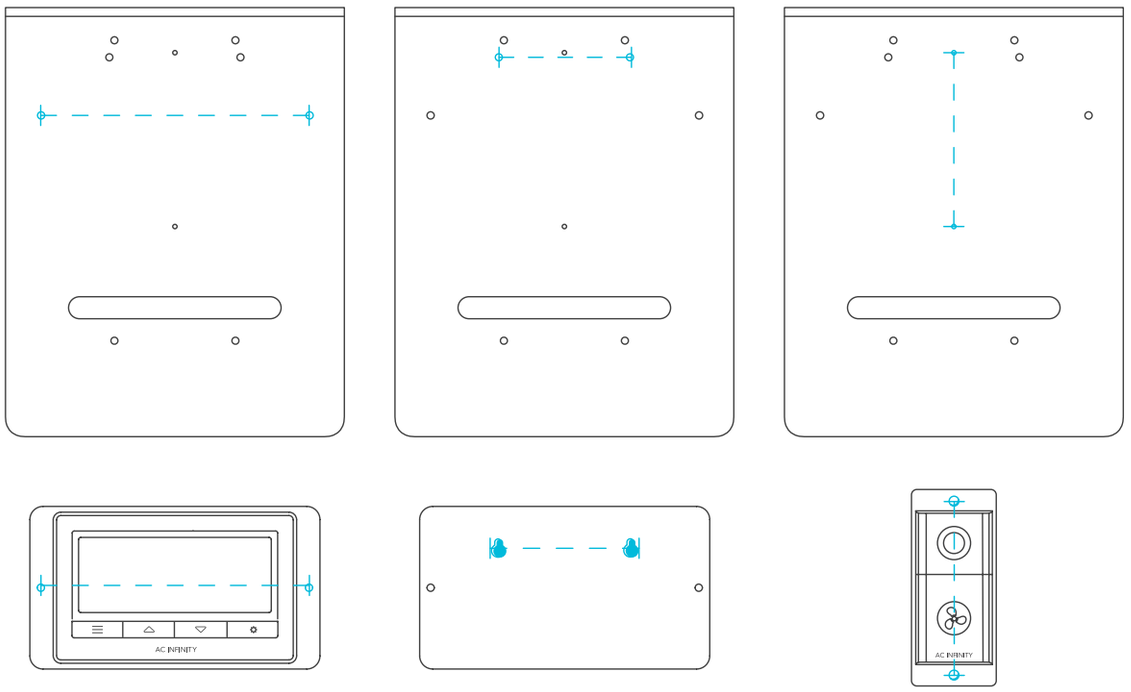

ONLY INCLUDED WITH

CLOUDLAB 422
CLOUDLAB 632
CLOUDLAB 733

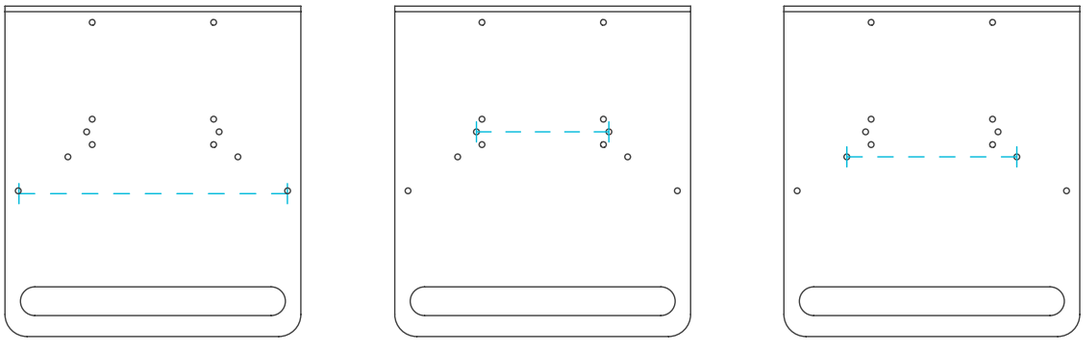

*Controllers Sold Separately

VENTILATION GUIDE

INLINE FAN AND GROW LIGHT

First hang your inline duct fan by the roof support beams. Position the fan on the opposite end of your intake hole to optimize airflow. If you are installing a carbon filter inside, use the included straps to hang the carbon filter.

Then install your grow light. You may use rope clip hangers to install these products.

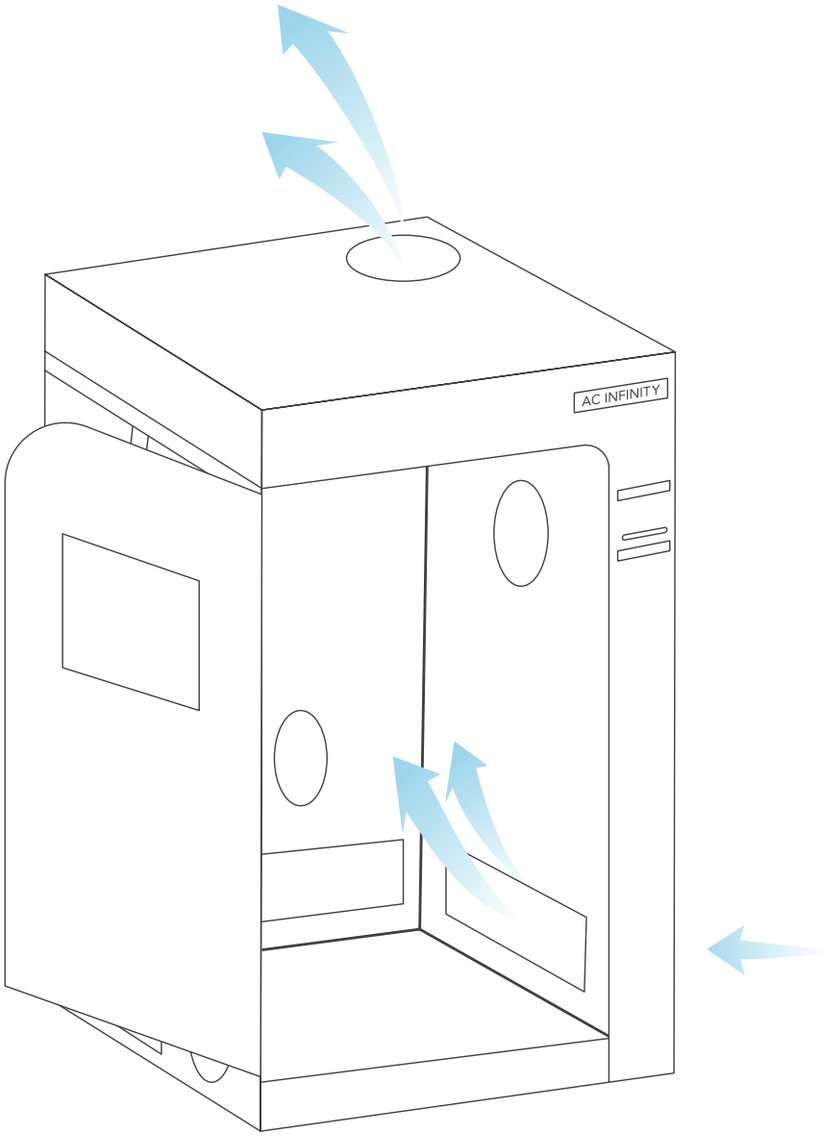

DOUBLE-SIDED CINCHES

Install any necessary duct tubes onto the ducting ports. Use the cinches on either end to secure the duct tubes onto the grow tent.

INTAKE HOLES

Introduce fresh air by using one of the two ventilation holes at the bottom of the grow tent. Open a passive intake screen or create active intake by attaching an additional inline fan to a duct port.

NEED MORE INFORMATION?

Scan the QR code or visit www.acinfinity.com for more guides and tutorials.

AC INFINITY PRODUCTS

Inline Fans

The CLOUDLINE series is a line of duct fans designed to quietly ventilate AV rooms and closets, as well as various DIY air circulation and exhaust projects. Features a thermal controller with intelligent programming that will automatically adjust duct fan speeds in response to changing temperatures.

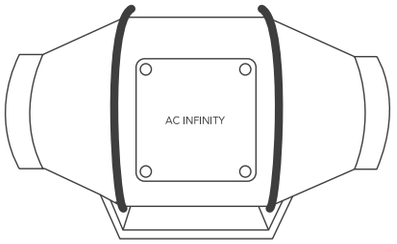

Carbon Filter

The duct carbon filter is designed to eliminate odors and chemicals for grow tents and hydroponic spaces. It utilizes premium grade Australian charcoal that features greater absorption power and a longer lifespan. Enables maximum airflow pass through as part of an intake or an exhaust system.

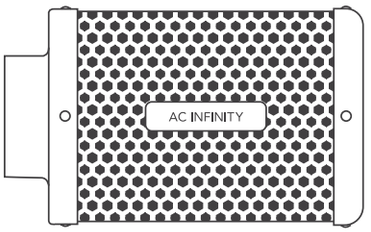

Ducting Tubes

The four-layer ducting tube is used to direct airflow, designed for ventilation systems in applications like HVAC, dryers, and grow rooms. It is highly durable and flexible, and can be used anywhere from tight spaces to wide open areas.

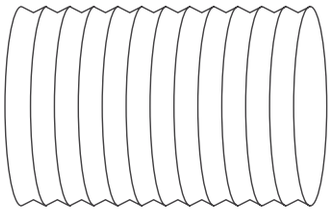

Discover the latest innovations in cooling and ventilation at acinfinity.com

WARRANTY

This warranty program is our commitment to you, the product sold by AC Infinity will be free from defects in manufacturing for a period of two years from the date of purchase. If a product is found to have a defect in material or workmanship, we will take the appropriate actions defined in this warranty to resolve any issues.

The warranty program applies to any order, purchase, receipt, or use of any products sold by AC Infinity or our authorized dealerships. The program covers products that have become defective, malfunctioned, or expressively if the product becomes unusable. The warranty program goes into effect on the date of purchase. The program will expire two years from the date of purchase. If your product becomes defective during that period, AC Infinity will replace your product with a new one or issue you a full refund.

The warranty program does not cover abuse or misuse. This includes physical damage, submersion of the product in water, incorrect Installation such as wrong voltage input, and misuse for any reason other than intended purposes. AC Infinity is not responsible for consequential loss or incidental damages of any nature caused by the product. We will not warrant damage from normal wear such as scratches and dings.

For more information about our dealers and distributors, please contact our customer service at support@acinfinity.com or (626) 923-6399 Monday to Friday (9:00 am to 5:00 pm PST).

If you run into any issues with this product, contact us and we'll happily issue a replacement or a full refund!

COPYRIGHT © 2020 AC INFINITY INC. ALL RIGHTS RESERVED
No part of the materials including graphics or logos available in this booklet may be copied, photocopied, reproduced, translated or reduced to any electronic medium or machine readable form, in whole or in part, without specific permission from AC Infinity Inc.

www.acinfinity.com