WAC
SMART FANS

ORB

Installation Instructions

WORKS WITH alexa

works with the Google Assistant

Works with SmartThings

ecobee

Bluetooth®

ENERGY STAR

Please read and review instructions before installation

GENERAL INQUIRIES

For all questions about your ceiling fan please read all included instructions, installation procedures, trouble-shooting guidelines and warranty information before starting installation

For missing parts or general inquiries call our trained technical staff at:

1-800-526-2588 option 0

MON-FRI 8AM-8PM EST

Email: customerservice@waclighting.com
Or live chat at www.waclighting.com

FAN SUPPORT

For fast service have the following information below when you call:

- Model Name and Number
- Part Number and Part Description
- Date Of Purchase and Purchase Location

1-800-526-2588 option 3

MON-FRI 8AM-8PM EST

Email: fansupport@waclighting.com

DO NOT RETURN TO STORE

SAFETY RULES

For operation, maintenance, and troubleshooting information, visit waclighting.com/help.

1. To reduce the risk of electric shock, ensure electricity has been turned off at the circuit breaker before beginning.

2. All wiring must be in accordance with the National Electrical Code "ANSI/NFPA 70" and local electrical codes. Electrical installation should be performed by a licensed electrician.

3. To reduce the risk of fire, electric shock, personal injury or damage to the fan or other items, the outlet box and support structure must be securely mounted and capable of reliably supporting a minimum of 35 lbs (15.9 kg). Use only UL/cUL listed outlet boxes marked "FOR FAN SUPPORT." Use only the screws and washers provided with the outlet box.

4. The fan must be mounted with a minimum of 7 ft. (2.1m) clearance from the trailing edge of the fan blades to the floor and a minimum of 1.5 ft (0.5m) from the edge of the fan blades to the surrounding walls.

5. Never place objects in the path of the fan blades.

6. To avoid personal injury or damage to the fan and other items, please be cautious when working around or cleaning the fan.

7. To avoid electrical shock or damage to the motor or finish, do not use water or chemicals when cleaning the fan or fan blades. A dry cloth or lightly dampened cloth will be suitable for most cleaning.

8. After making electrical connections, spliced conductors should be turned upward and pushed carefully up into the outlet box. The wires should be spread apart with the grounded conductor and the equipment-grounding conductor on one side of the outlet box, and the ungrounded conductor on the other side of the outlet box.

9. All set screws must be checked and re-tightened where necessary before installation.

SAFETY RULES

WARNING: Do not install or use your fan if any part(s) is/are damaged or missing. This product is designed for use only with the supplied parts and/or accessories designated for use with this product by WAC. Substitution of parts or accessories not designated for use with this product by WAC could result in personal injury or property damage and will void the warranty. Contact an authorized dealer or the manufacturer if any parts are damaged or missing.

WARNING: To reduce the risk of electric shock, this fan must be installed and operated with the supplied wall control, or controlled from the WAC app or Wall Control (not included).

WARNING: Do not use power tools to assemble or install your fan. Using power tools can result in improper assembly which can lead to noise or fan damage,personal injury or property damage.

WARNING: To reduce the risk of personal injury, do not bend the blade arms when installing the brackets, balancing the blades or cleaning the fan.

WARNING: Do not insert foreign objects between rotating fan blades.

WARNING: Do not operate fan unless fan blades are in place. Noise and fan damage can occur

WARNING: This appliance is not intended for use by young children without supervision.

CAUTION: Before assembling your fan, refer to the "Making the Electrical Connections" section. If you feel you do not have enough wiring knowledge or experience, have your fan installed by a licensed electrican.

NOTE: Before servicing or cleaning the fan, switch power off at the circuit breaker.

GET SMART

This WAC Smart Fan is:

Wet/Damp location-listed to the strictest UL/cUL safety regulations

Coordinate with smart devices for voice-activated control

DC MOTOR

Quiet, reliable, and up to 70% more efficient than AC motor fans

Wi-Fi and Bluetooth enabled for unlimited control

Compatible with our WAC app

The WAC app synchronizes seamlessly with smart home devices you already own

WORKS WITH alexa

works with the Google Assistant

Works with SmartThings

ecobee

CONNECTS WITH Control4

APP DOWNLOAD
Available for purchase on the Google Pay and App Store

GET IT ON Google Play

Download on the App Store

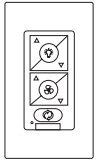

WALL CONTROL
WC20-WT
Optional Accessory
Sold Separately
6 fan speeds
Dims light to 1%
ON/OFF

REMOTE CONTROL
RC20-WT
Included with each fan
6 fan speeds
Dims light to 1%
ON/OFF

TABLE OF CONTENTS

4	Package Contents	9.
5	Mounting Options	10.
5	Installing the Mounting Bracket	10.
6	Attaching the Fan Blades	11.
7	Hanging the Fan	12.
7	Making the Electrical Connections	12.
8	Installing the Optional Wall Control	13.
9	Installing the Adapter Plate	14.
10	Installing the Luminaire Module	15.
11	Finishing the Installation	17.
12	Controlling the Fan	18.
13	Factory Reset	21.
14	App Instructions	22.
15	Accessories	24.
16	Troubleshooting	25.

03 TOOLS & MATERIALS REQUIRED

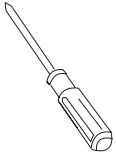

Phillips screwdriver

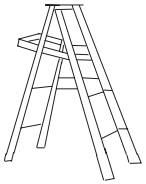

Step ladder

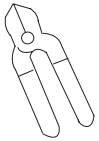

Wire cutters

Electrical tape

NOTE: Before discarding packaging materials, be certain all parts have been removed.
NOTE: Place the parts from the hardware bag into a small container to keep them from being lost.

MAC ID

IMPORTANT: Please make note of the MAC ID on the receiver and keep it in a safe place.

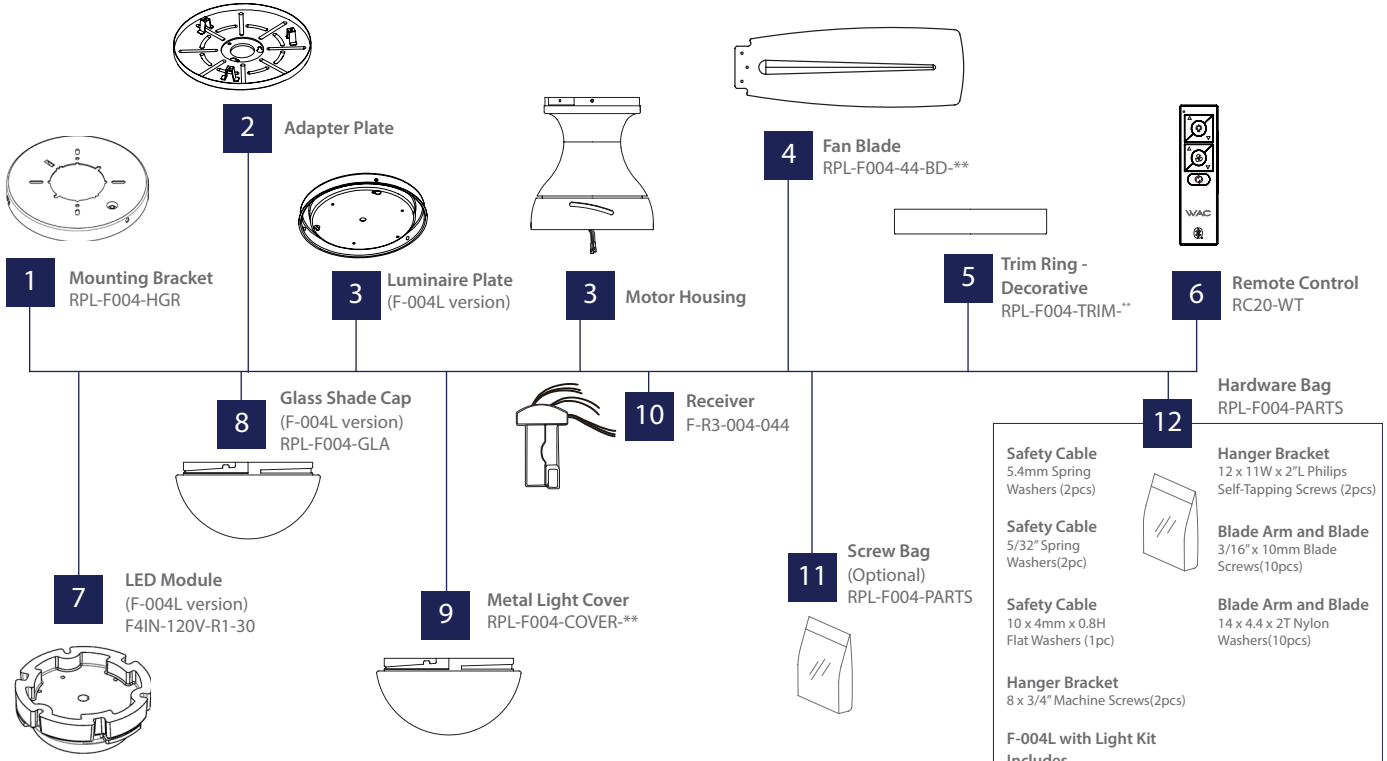

NOTE: ** denotes finish code of fan

05 MOUNTING OPTIONS

1

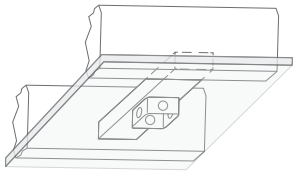

Standard Ceiling

CAUTION: To prevent electrical shock, ensure electricity has been turned off at the circuit breaker before beginning.

Mount to the outlet box as shown above.

INSTALLING THE MOUNTING BRACKET

2

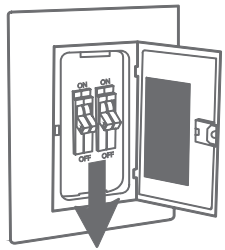

Caution: To prevent electrical shock, ensure electricity has been turned off at the circuit breaker before beginning.

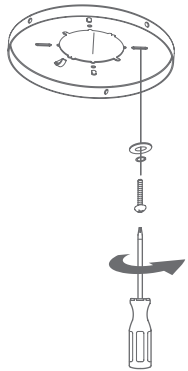

1. Remove 1 set screw from mounting bracket and set aside for use in Finishing the Installation.

2. Pass supply wires through mounting bracket and secure to outlet box.

1. Place blade into motor housing.
2. Insert blades in slots, aligning with motor assembly holes.
3. Secure blades with blade attachment screws & washers.

07 HANGING THE FAN

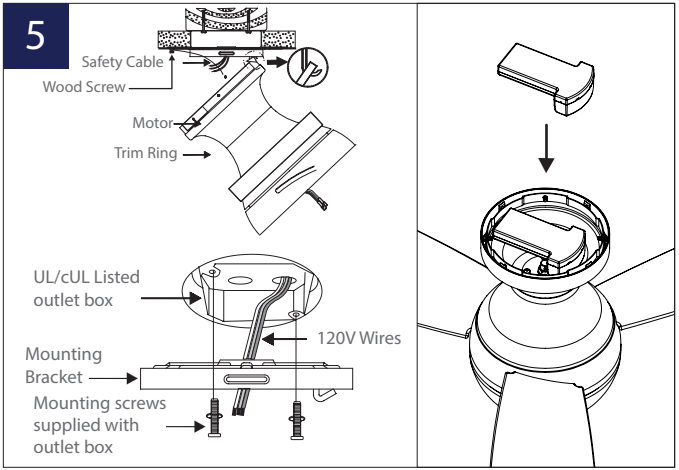

1. Remove 2 opposing screws and loosen the other 2.
2. Pass supply wires through mounting plate.
3. Place trim ring onto the canopy. Opening of 4 clips facing up.
4. Lift motor assemby and hang it on the hook on the mounting plate using one of the screw holes.
5. Secure the safety cable to the building structure using a wood screw (not included) (Fig. 9).

NOTE: Safety cable is required for all ceiling fan installations in Canada. Safety cable is required for ceiling fan and light (combo) installations over 35 lbs. in both flush and downrod models in the United States.

MAKING THE ELECTRICAL CONNECTIONS

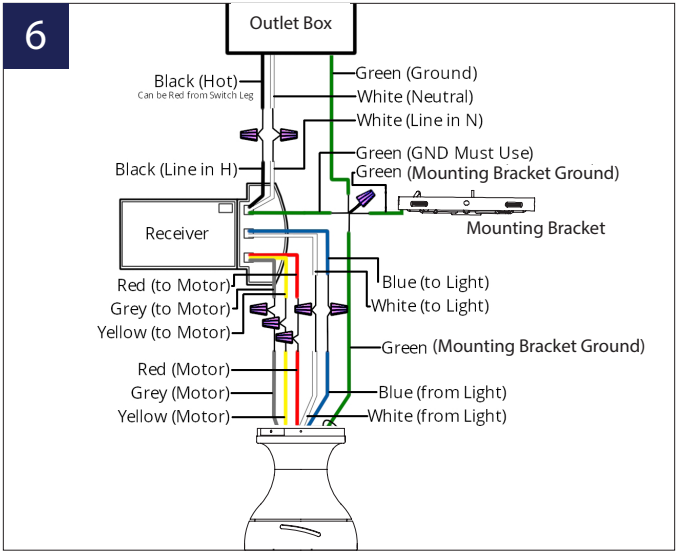

1. Connect the labeled wires from fan to the corresponding wires on the receiver.

2. Connect the labeled wires from the outlet box to the corresponding wires on the receiver.

7

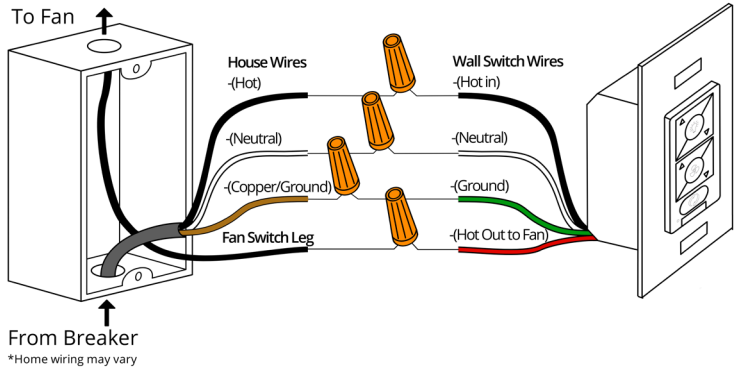

NOTE: Wall control not included. A Bluetooth wall control accessory can be purchased separately.

NOTE: For multi-location wiring, skip to the next step.

1. Connect the green wire marked "GROUND" from the wall control to the copper wire from the wall outlet box that feeds back to the circuit breaker – important for proper fan function.
2. Connect the black wire marked "LINE IN" from the wall control to the black LINE VOLTAGE wire from the wall outlet box that feeds back to the circuit breaker.
3. Connect the red wire from the wall control to the black wire from the wall outlet box that feeds up to the fan.
4. Connect the white wire from the wall control to the white (neutral) wire from the wall outlet box.
5. Carefully tuck the wire connections inside the outlet box. Secure the wall control with the two (2) wall control screws provided.
6. Attach the wall mounting plate over the wall switch and secure with the two (2) wall mounting plate screws provided.
7. Fasten the wall plate to the wall mounting plate.

09 INSTALLING THE ADAPTER PLATE / FINISHING THE INSTALLATION

8

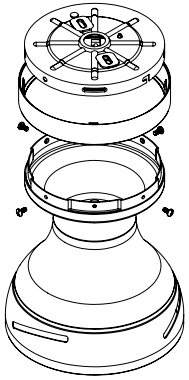

1. Secure wire connectors with supplied wire ties.

2. Remove the motor from the hook on the mounting bracket. Slide the motor up to the mounting bracket and place the key hole on the motor over the screw on the mounting bracket. Turn motor until it locks in place at the narrow section of the key holes.

3. Align the circular hole on canopy with the remaining hole on the mounting bracket. Secure by tightening the two screws previously loosened and the two screws previously removed.

4. Raise up trim ring and line up the 4 tabs with the 4 grooves on the mounting bracket. Once lined up, slide the trim ring and secure it to the canopy until snug.

9

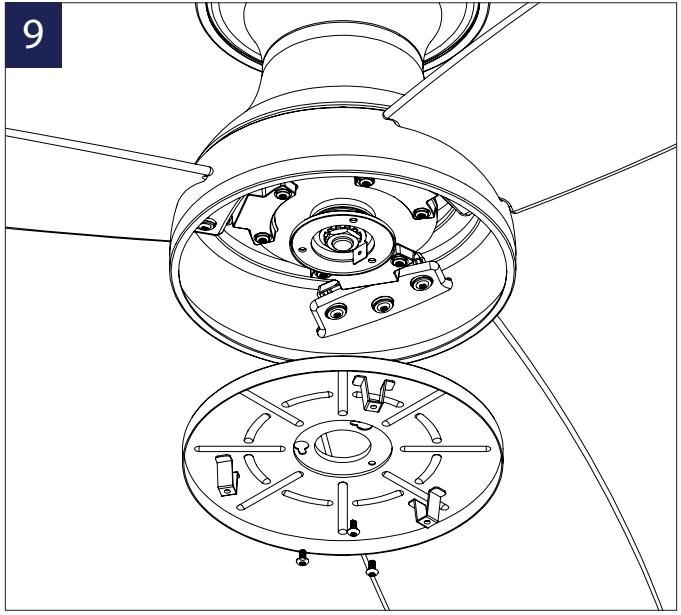

1. Remove 1 of 3 screws from the mounting ring and loosen the others (do not remove).

2. Install the adapter plate, by screwing in the previously removed screw and tightening the others.

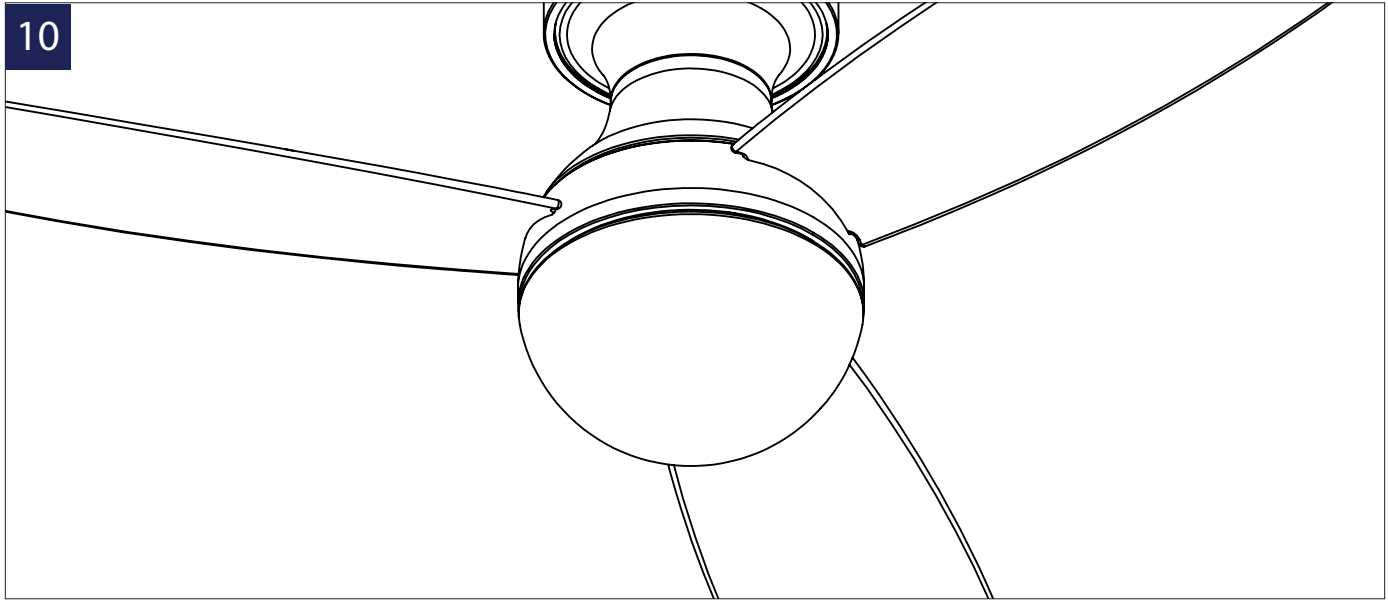

NOTE: Skip to next step if you purchased the luminaire version.

1. Install metal light cover firmly without over-tightening.

10 INSTALLING THE LUMINAIRE MODULE & GLASS

(When installing F-004L)

11

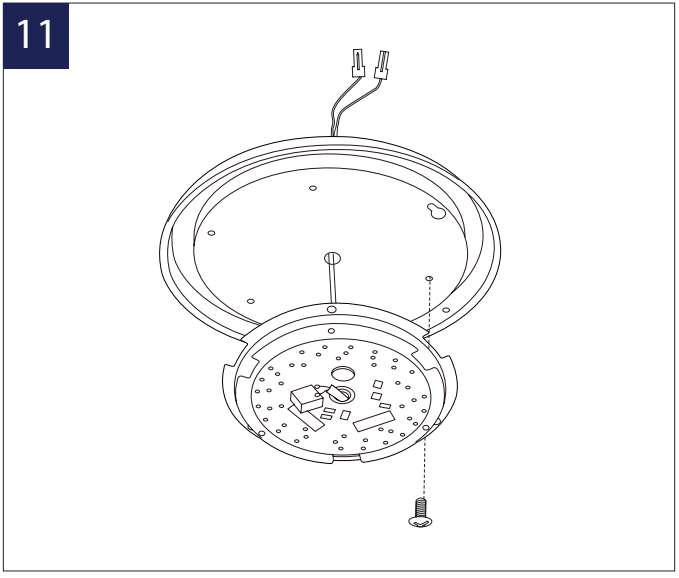

1. Run LED wires from motor housing through the adapter and luminaire adapter plates.
2. Connect white wire to white wire and black wire to blue wire.

NOTE: Do not screw in luminaire plate until LED wires are connected.

12

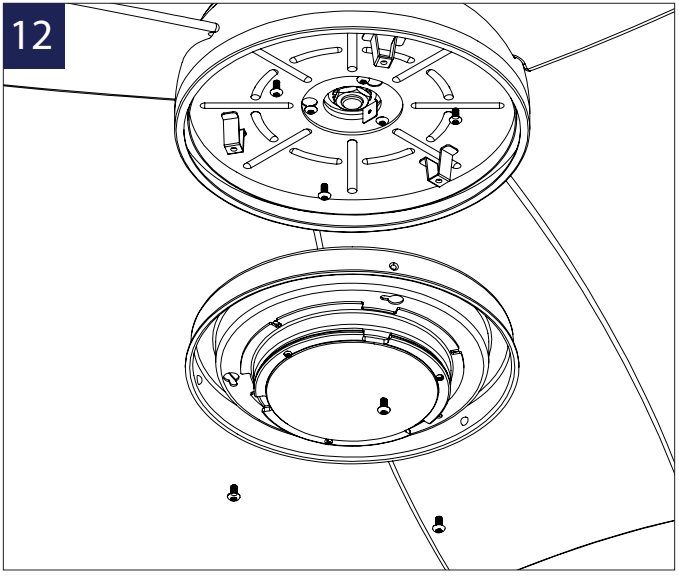

1. Remove 1 of 3 screws from the adapter plate and loosen the others (do not remove).
2. Using the screw from the previous step, install the luminaire plate.
3. Secure the LED module to the luminaire plate using the 3 screws provided in the screw bag.

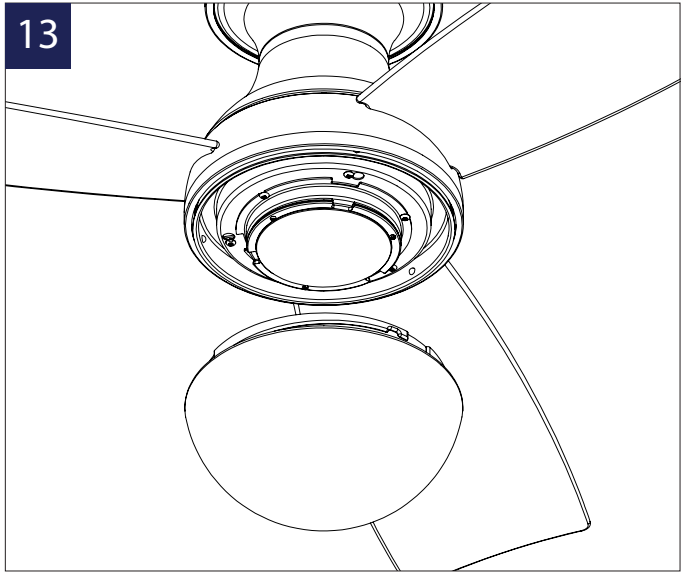

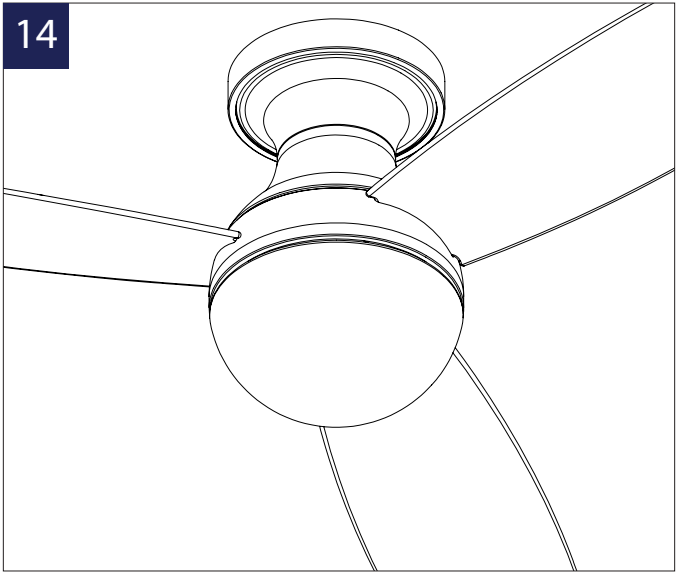

1. Install glass shade without over-tightening.

12 CONTROLLING THE FAN

15

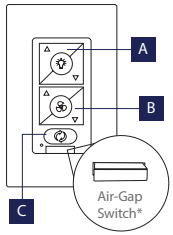

Wall Control

* Air-Gap Switch only included with wall control

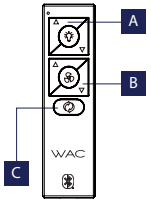

Remote

Control

16

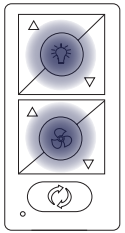

Pairing

Press and hold buttons for 10-15 seconds.

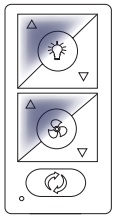

Unpairing

To purge, press and hold buttons for 4 seconds.

17

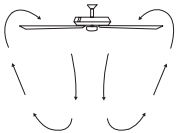

Summer Mode

(Counter-Clockwise)

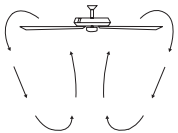

Winter Mode

(Clockwise)

Your fan was delivered to you with the included control already paired to your fan. You will need to remove the pull-tab to begin using your remote control.

A: Light On/Off, Bright/Dim

B: Fan On/Off, Speed Up/Down

C: Season (Summer/Winter)

Air-Gap Switch: Pull tab to power off in case of emergency. Not necessary for normal fan operation (only included with wall control).

NOTE: Your fan features 6 speeds. An audible tone will indicate when the speed is increased or decreased. When the fan has reached the minimum/maximum speed level the fan will beep twice.

NOTE: Pairing must be completed within 3 minutes of turning the power on to the fan receiver.

Breeze Mode

1. Breeze Mode mimics the natural ebb and flow of winds in nature by varying the fan speed.

   NOTE: Breeze Mode always rotates your fan in the Summer (CCW) direction

2. To start Breeze Mode, press and for 4 seconds. The LED will blink green and the fan will beep.

3. To exit Breeze Mode and return to standard fan mode, press and for 4 seconds. The led will blink green and the fan will beep. Your fan will return to the direction and speed it was set to prior to entering Breeze Mode.

Controlling Multiple Fans with Remote or Wall Controls

Your remote and wall controls are capable of controlling multiple fans. A remote or wall control has the ability to control an unlimited number of fans with the only limitation being the Bluetooth® range of the control and fan.

Pairing a remote control or wall control to an additional fan(s) can be performed in the same manner as described in the pairing section.

NOTE: Pairing must be completed within three (3) minutes of powering the fan.

Synchronizing Control Across Multiple Fans

If you are controlling more than one fan with a remote control, there is a possibility that their light state, fan state or fan direction can get out of sync. To bring the fans/lights back into sync please follow the instructions on the next page.

12 CONTROLLING THE FAN

23

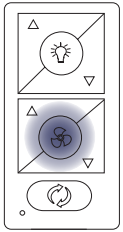

Fan On/Off

Press and hold
button for 4 seconds.

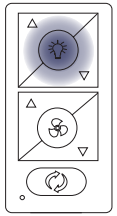

Light On/Off

Press and hold
button for 4 seconds.

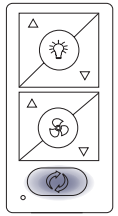

Fan Direction

Press and hold
button for 4 seconds.

Fan On/Off: Press and hold button for 4 seconds. The LED on the remote will flash green and all connected fans will beep to indicate the message has been received. All fans will turn off. This will bring all fans controlled by the remote into sync.

Light On/Off: Press and hold button for 4 seconds. The LED on the remote will flash green and all connected fans will beep to indicate the message has been received. All lights will turn off. This will bring all fans controlled by the remote into sync.

Fan Direction: Press and hold button for 4 seconds. The LED on the remote will flash green and all connected fans will beep to indicate the message has been received. All fans will be set to summer mode (CCW rotation). This will bring all fans controlled by the remote into sync.

18

Fan Wi-Fi Reset

Press and hold the ⊛△ and ⊛▽ for 10 seconds until LED blinks green and receiver emits 2 long beeps

19

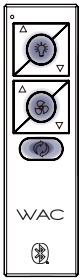

Factory Reset

Press and hold buttons for 10 seconds

20

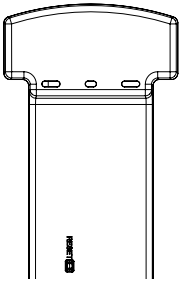

Receiver Factory Reset

Press the reset button on the receiver until the receiver beeps

NOTE: If you change your Wi-Fi settings (SSID or Security Passphrase you will need to perform a Wi-Fi reset on the fan by holding down the fan speed up and fan speed down buttons on the remote control for 10 seconds. The light on the remote will flash green and the fan will sound two long beeps. You can then use the Modern Forms Fans app to connect your fan to the new network.

NOTE: Factory reset will remove remote control(s), wall control(s) and WAC Smart Fan app connections.

NOTE: You may need to factory reset your receiver if you experience issues with network connectivity. Once you factory reset your receiver - go back into the app and follow the steps. The factory reset from the wall control only works if the wall control was successfully paired to the fan.

14 APPLICATION

In addition to the included control, you can operate your fan by purchasing the WAC Smart Fans app.*

Upgradeable with Smart Features

Scan the code to the right with your phone to find out how you can enable smart features through the WAC Smart Fan app and integrate with your smart home ecosystem.

NOTE: Press light toggle and season toggle and hold for 4 seconds if you prefer not using the app or broadcasting Wi-Fi.

1. To use the WAC Smafrt Fan app, download it from the App Store or Google Play.
2. Open the app to create your account. You can also log in using your Facebook or Google account.
3. To set up a Wi-Fi connection you will need the SSID and Wi-Fi password for the network you wish to connect to.
4. You will receive a prompt to name your fan device and upload an optional picture of it if you choose.

For more detailed app Instructions and Smart Home Device Integration

http://www.waclighting.com/SmartFanStart

5. The WAC Smart Fan app will walk you through the main screen and show you how to create schedules, change fan speeds, dim the light, switch between Summer and Winter Modes, invite users, create groups and much more. Please refer to the WAC Smart Fan app instructions for more details.

**Additional purchase required to enable app control and integration.
**$9.95 + applicable tax per fan

Scan and follow prompts for multilingual instruction options and Smart Fan FAQs:

Spanish

French

15 ACCESSORIES

Product		Model	Description	Finish
Bluetooth Wall Control		**WC20**	6 fan speeds, dims light to 1% Works in conjunction with WAC Smart Fan receiver (not included)	**WT**
Bluetooth Remote Control		**RC20**	Compatible with WAC Smart Fans 6 fan speeds, dims light to 1%	**WT**

My Fan Will Not Start

1. Check main and branch circuit fuses or circuit breakers.
2. Check line wire connections to fan and switch wire connections in the switch housings.

WARNING: Make sure the main power is turned off!

My Fan is Noisy

1. Allow for 24-hour break-in period. Most noises associated with a new fan will go away during this time period.
2. Check to make sure the screws which attached to the blades (and blade arms when applicable) are tight.
3. Check to make sure all screws in motor housing are snug.
4. Make sure light cover is tightened and/or glass is snug.
5. Tighten the hanger bracket screws and make sure the outlet box is secured.
6. Your wire connectors may be rattling against the fan's canopy.
7. Make sure you have a cUL/UL approved outlet box and it is installed correctly.

My Fan is Wobbling

1. Make sure the fan blades are properly aligned and securely fastened to the motor housing assembly/blade arms.
2. Make sure the gaps between the blades are evenly distributed.
3. Make sure you are using an approved cUL/UL listed outlet box and it is installed correctly

16 TROUBLESHOOTING

My remote or wall control is not controlling my fan

Verify that the fan is receiving power by power cycling the fan.

To do this:

1. Cut power to the fan via standard On/Off wall switch, or the breaker if standard wall switch is not applicable.
2. Wait at least 10 seconds, and then restore power.
3. The fan will power on in Pairing mode for 3 minutes.
4. Press and hold (ICON) and (ICON) buttons on wall control for 10-15 seconds.
5. When the LED indicator remains solid green, and three (2) audible beeps are heard, the pairing process is complete.

My home Wi-Fi network is not showing up in the app's list during setup.

1. Your fan supports connection with 2.4GHz 802.11b/g/n networks. Confirm your network is compatible by checking your router settings or contact your router manufacturer.
2. Make sure your network's SSID is not hidden.
3. Your fan does not support 5 GHz network connectivity.

My Fan failed to join the Wi-Fi network

Make sure you entered the correct Wi-Fi password and your mobile device is connected to the same network you attempted to connect the fan.

Make sure you are within the router manufacturer's specified range. If all of these steps have failed - please power cycle your fan and router and retry.

What is power cycling and how do I power cycle my fan?

Power cycling is the act of temporaily removing the power source for your fan. If the fan is powered through a wall switch, turn the switch off for 10 seconds and back on. Alternately, you can use the circuit breaker the fan is connected to by toggling it off for 10 seconds and back on. If your fan is wired through a WAC wall control (P/N: WC20-WT) pull the Air-Gap Switch on your wall control, wait 10 seconds, and re-insert.

What is Adaptive Learning?

Adaptive learning is an exclusive feature that allows your fan to learn your daily/weekly habits and automatically recommend scheduled activity through the Modern Forms app. This feature can be toggled on or off.

What is Breeze Mode?

Breeze Mode mimics the natural ebb and flow of winds in nature by fluctuating your fan's speed.

What is Pairing?

Pairing is the process of connecting your WAC remote or wall control to your fan. Your fan comes pre-paired to your included remote control. However, if you want additional controls for your fan or if you're replacing a control, refer to the pairing and unpairing section of the instructions.

What is a Factory Reset?

Factory Reset is a restore of the fans original settings. This can be achieved from the control or by pressing and holding the small button on the receiver until you hear three audible beeps or by holding down the fan toggle, light toggle, and season toggle buttons on your paired remote or wall control for 10 seconds. NOTE: You will need to re-pair your remote or wall controls to the fan following a factory reset. A factory reset will also disconnect the fan from your home Wi-Fi network and will require you to add the fan using the WAC Smart Fans app.

Please refer to the FAQ section of our app for further guidance. For all other questions, please contact our dedicated Fan Support specialists. Contact information can be found at the front of the instructions.

CERTIFICATE OF WARRANTY

Congratulations on your new purchase.

Your new WAC Smart Fan is engineered to make life easier every day. WAC creates future-forward fans and luminaires that provide energy savings and outstanding efficency. Our dedication to doing things the right way goes beyond our love
for amazing products. WAC Smart Fans™ warrants any of its outdoor rated ceiling fan products that they are to be free from defects in material and workmanship for a period of one (1) year from the date of purchase; outdoor painted finishes are warranted for two (2) years; LED light modules and electronic components are warranted for five (5) years;
DC motors and stainless steel finishes are warranted for lifetime under normal use to the first non-dealer purchaser.

Although WAC uses the best available materials and does extensive testing for finish endurance, some fading or chalking may occur and is considered normal. For coastal locations, some corrosion and/or deterioration is considered "normal wear" in this environment. Therefore, any finish claim due to coastal environment conditions is not applicable to our warranty.If a product is defective, all efforts will be made to correct
the problem in the field. If the problem cannot be resolved, an RGA number will be issued. WAC obligation is expressly limited to repair or replacement, without charge, at the WAC factory after prior written return authorization has been granted.

WAC obligation under this warranty shall not extend beyond the distributor's initial purchase price of the product and accordingly any consequential damages or labor costs arising out of a defect are expressly excluded. This warranty shall not apply to products that have been altered, improperly installed, mishandled or misused. Notice of a defect in writing must be received by WAC within five (5) years from the date of purchase (or according period of time as outlined by material). Excluded from warranty are any 3rd party component which carries its own manufacturer's warranty. Note: WAC product warranty applies only to purchases from authorized WAC distributors. **THERE ARE NO WARRANTIES WHICH EXTEND BEYOND THE DESCRIPTION ON THE FACE HEREOF INCLUDING WARRANTIES OF MERCHANTABILITY AND FITNESS FOR A PARTICULAR PURPOSE.**

The Bluetooth ® word mark and logos are registered trademarks owned by Bluetooth SIG, Inc. and any use of such marks by Wangs Alliance Corporation is under license. Other trademarks and trade names are those of their respective owners.

Felicidades por tu nueva compra.

Su nuevo ventilador WAC está diseñado para facilitarle la vida cada día. WAC crea ventiladores y luminarias para el futuro que proporcionan ahorros de energía y eficiencia excepcional. Nuestra dedicación a hacer las cosas de la manera correcta va más allá de nuestro amor por los productos asombrosos.WAC garantiza a cualquiera de sus productos para ventiladores de techo con clasificación exterior que estén libres de defectos en materiales y mano de obra por un período de un (1) año desde el fecha de compra; Los módulos de luz LED están garantizados por cinco (5) años; Los motores de CC y los acabados de acero inoxidable están garantizados de por vida bajo el uso normal para el primer comprador no distribuidor.

Aunque WAC utiliza los mejores materiales disponibles y realiza pruebas exhaustivas para la resistencia del acabado, puede producirse cierto desvanecimiento o parloteo y se considera normal. Para las ubicaciones costeras, cierta corrosión y / o deterioro se considera "desgaste normal" en este entorno. Por lo tanto, cualquier reclamación de acabado debido a las condiciones del entorno costero no se aplica a nuestra garantía. Si un producto es defectuoso, se harán todos los esfuerzos para corregirlo. El problema en el campo. Si el problema no se puede resolver, se emitirá un número RGA. La obligación de WAC se limita expresamente a la reparación o el reemplazo, sin cargo, en la fábrica de WAC después de que se haya otorgado una autorización previa por escrito.

La obligación de WAC bajo esta garantía no se extenderá más allá del precio de compra inicial del producto por parte del distribuidor y, en consecuencia, cualquier daño consecuencial o costo de mano de obra que surja de un defecto se excluye expresamente. Esta garantía no se aplicará a los productos que hayan sido alterados, instalados incorrectamente, mal manejados o mal utilizados. La notificación de un defecto por escrito debe ser recibida por WAC dentro de los cinco (5) años a partir de la fecha de compra (o según el período de tiempo indicado en el material). Quedan excluidos de la garantía todos los componentes de terceros que tengan la garantía de su propio fabricante. Nota: la garantía del producto WAC se aplica solo a las compras de los distribuidores autorizados de WAC. **NO HAY GARANTÍAS QUE SE EXTIENDAN MÁS ALLÁ DE LA DESCRIPCIÓN DE SU CARACTERÍSTICA, INCLUIDAS LAS GARANTÍAS DE COMERCIABILIDAD Y ADECUACIÓN PARA UN PROPÓSITO PARTICULAR.**

La marca denominativa y los logotipos Bluetooth ® son marcas registradas propiedad de Bluetooth SIG, Inc. y cualquier uso de dichas marcas por parte de Wangs Alliance Corporation se realiza bajo licencia. Otras marcas comerciales y nombres comerciales pertenecen a sus respectivos propietarios.

Félicitations pour votre nouvel achat.

Votre nouveau ventilateur intelligent WAC est conçu pour vous simplifier la vie au quotidien. WAC crée des ventilateurs et des luminaires d'avant-garde qui permettent des économies d'énergie et une efficacité exceptionnelle. Notre engagement à bien faire les choses va au-delà de notre amour pour les produits étonnants.WAC garantit à tous ses produits pour ventilateurs de plafond pour extérieur qu'ils ne doivent présenter aucun défaut de matériau ou de fabrication pendant un (1) an date d'achat; Les modules d'éclairage à LED sont garantis pendant cinq (5) ans; Les moteurs à courant continu et les finis en acier inoxydable sont garantis à vie dans les conditions normales d'utilisation par le premier acheteur non revendeur.

Bien que WAC utilise les meilleurs matériaux disponibles et effectue des tests approfondis pour l'endurance de la finition, des décolorations ou des craies peuvent se produire et sont considérés comme normaux. Pour les zones côtières, une certaine corrosion et / ou détérioration est considérée comme une «usure normale» dans cet environnement. Par conséquent, toute réclamation liée à la finition en raison des conditions de l'environnement côtier ne s'applique pas à notre garantie. Si un produit est défectueux, tous les efforts seront déployés pour y remédier. Le problème sur le terrain. Si le problème ne peut pas être résolu, un numéro RGA sera attribué. L'obligation de WAC est expressément limitée à la réparation ou au remplacement, sans frais, dans l'usine de WAC après autorisation écrite préalable du retour.

L'obligation de WAC au titre de cette garantie ne s'étendra pas au-delà du prix d'achat initial du produit par le distributeur. En conséquence, tout dommage indirect ou tout coût de main-d'œuvre résultant d'un défaut est expressément exclu. Cette garantie ne s'applique pas aux produits modifiés, mal installés, manipulés ou utilisés de manière inappropriée. WAC doit recevoir un avis écrit du défaut dans un délai de cinq (5) ans à compter de la date d'achat (ou selon la période précisée dans les informations fournies). Sont exclus de la garantie tout composant tiers bénéficiant de la garantie du fabricant. Remarque: la garantie des produits WAC ne s'applique qu'aux achats auprès des distributeurs agréés WAC. **IL N'Y A AUCUNE GARANTIE QUI ALLAIT AU-DELÀ DE LA DESCRIPTION FACE AU PRESENT, INCLUANT LES GARANTIES DE QUALITÉ MARCHANDE ET D'ADÉQUATION À UN USAGE PARTICULIER.**

La marque et les logos Bluetooth ® sont des marques déposées appartenant à Bluetooth SIG, Inc. et toute utilisation de ces marques par Wangs Alliance Corporation est sous licence. Les autres marques et noms commerciaux appartiennent à leurs propriétaires respectifs.

WAC
SMART FANS

F-004

waclighting.com