Bäumr-AG®



260RX Ride On Mower

User Manual

[Revision 1.0]

READ THIS MANUAL CAREFULLY BEFORE USE – FAILURE TO DO SO MAY RESULT IN INJURY, PROPERTY DAMAGE AND MAY VOID WARRANTY. • KEEP THIS MANUAL FOR FUTURE REFERENCE. • Products covered by this manual may vary in appearance, assembly, inclusions, specifications, description, and packaging.



The product is NOT supplied with engine oil, although traces of oil from the manufacturing process may be present. It is essential to add adequate engine oil of the correct type to the engine before use. **Failure to add engine oil will void the product warranty**.

THE BATTERY MAY HAVE SOME CHARGE ON ARRIVAL, IT IS IMPORTANT HOWEVER THAT THE BATTERY IS CHARGED PRIOR TO USE.

Safety

Safety messages are designed to alert you to possible dangers or hazards that could cause death, injury or equipment or property damage if not understood or followed. Safety messages have the following symbols:



You WILL be KILLED or SERIOUSLY INJURED if you do not follow instructions.



You CAN be KILLED or SERIOUSLY INJURED if you do not follow instructions.



You CAN be INJURED if you do not follow instructions or equipment damage may occur.

It is vital that you read and understand this user manual before using the product, including safety warnings, and any assembly and operating instructions. Keep the manual for future reference.

Safety precautions and recommendations detailed here must be fully understood and followed to reduce the risk of injury, fire, explosion, electrical hazard, and/or property damage.

Safety information presented here is generic in nature – some advice may not be applicable to every product. The term "equipment" refers to the product, be it electrical mains powered, battery powered or combustion engine powered.

- **Before Use** - If you are not familiar with the safe operation/handling of the equipment or are in any way unsure of any aspect of suitability or correct use for your application, you should complete training conducted by a person or organization qualified in safe use and operation of this equipment, including fuel/electrical handling and safety.
- Do NOT operate the equipment in flammable or explosive environments, such as in the presence of flammable liquids, gases, or dust. The equipment may create sparks or heat that may ignite flammable substances.
- Keep clear of moving parts.
- Equipment may be a potential source of electric shock or injury if misused.
- Do NOT operate the equipment if it is damaged, malfunctioning or is in an excessively worn state.
- Do NOT allow others to use the equipment unless they have read this manual and are adequately trained.
- Keep packaging away from children - risk of suffocation! Operators must use the equipment correctly. When using the equipment, consider conditions and pay due care to persons and property.

General Work Area Safety

- Work areas should be clean and well it.
- Do not operate the equipment if bystanders, animals etc are within operating range of the equipment or the general work area.
- If devices are provided for connecting dust extraction / collection facilities, ensure these are connected and used properly. Dust collection can reduce dust-related hazards.

General Personal Safety

- Wear appropriate protective equipment when operating, servicing, or when in the operating area of the equipment to help protect from eye and ear injury, poisoning, burns, cutting and crush injuries. Protective equipment such as safety goggles, respirators, non-slip safety footwear, hard hat, hearing protection etc should be used for appropriate equipment / conditions. Other people nearby should also wear appropriate personal protective equipment. Do not wear loose clothing or jewellery, which can be caught in moving parts. Keep hair and clothing away from the equipment.
- Stay alert and use common sense when operating the equipment. Do not over-reach. Always maintain secure footing and balance.
- Do not use the equipment if tired or under the influence of drugs, alcohol, or medication.
- This equipment is not intended for use by persons with reduced physical, sensory, or mental capabilities.

General Fuel Safety

- Petrol/fuel/gasoline is extremely flammable – keep clear of naked flames or other ignition sources.
- Do not spill fuel. If you spill fuel, wipe it off the equipment immediately – if fuel gets on your clothing, change clothing.
- Do NOT smoke near fuel or when refuelling.
- Always shut off the engine before refuelling.
- Do NOT refuel a hot engine.
- Open the fuel cap carefully to allow any pressure build-up in the tank to release slowly.
- Always refuel in well-ventilated areas.
- Always check for fuel leakage. If fuel leakage is found, do not start, or run the engine until all leaks are fixed.

General Carbon-Monoxide Safety

- Using a combustion engine indoors **CAN KILL IN MINUTES**. Engine exhaust contains carbon-monoxide – a poison you cannot smell or see.
- Use combustion engines OUTSIDE only, and far away from windows, doors, and vents.

General Equipment Use and Care

- Keep packaging away from children and pets, potential risk of suffocation or choking.
- The equipment is designed for domestic use only.
- Handle the equipment safely and carefully.
- Before use, inspect the equipment for misalignment or binding of moving parts, loose components, damage, or any other condition that may affect its operation. If damaged, have the equipment repaired by an authorised service centre or technician before use.
- Prevent unintentional starting of the equipment - ensure equipment and power switches are in the OFF position before connecting or moving equipment. Do not carry equipment with hands or fingers touching any controls. Remove any tools or other items that are not a part of the equipment from it before starting or switching on.
- Do not force the equipment. Use the correct equipment for your application. Equipment will perform better and be safer when used within its design and usage parameters.
- Use the equipment and accessories etc. in accordance with these instructions, considering working conditions and the work to be performed. Using the equipment for operations different from those intended could result in hazardous situations.
- Always keep equipment components (engines, hoses, handles, controls, frames, housings, guards etc) and accessories (cutting tools, nozzles, bits etc) properly maintained. Keep the equipment clean and, where applicable, properly lubricated.
- Store the equipment out of reach of children or untrained persons. To avoid burns or fire hazards, let the equipment cool completely before transporting or storing. Never place or store the equipment near flammable materials, combustible gases, or liquids etc.
- The equipment is not weather-proof, and should not be stored in direct sunlight, at high ambient temperatures or locations that are damp or humid.
- Do not clean equipment with solvents, flammable liquids, or harsh abrasives.
- For specific equipment safety use and care, see Equipment Safety.

© Baumr-AG

General Electrical Safety

- Inspect electrical equipment, extension cords, power bars, and electrical fittings for damage or wear before each use. Repair or replace damaged equipment immediately.
- Ensure all power sources conform to equipment voltage requirements and are disconnected before connecting or disconnecting equipment.
- When wiring electrically powered equipment, follow all electrical and safety codes.
- Always use a Residual Current Device (RCD) (GFCI) / Earth Leakage Circuit Breaker / Safety Switch when operating this item (electrical items only).
- High voltage / high current power lines may be present. Use extreme caution to avoid contact or interference with power lines. Electrical shock can be fatal.

General Electrical Safety

- Electrically grounded equipment must have an approved cord and plug and be connected to a grounded electrical outlet.
- Do NOT bypass the ON/OFF switch and operate equipment by connecting and disconnecting the electrical cord.
- Do NOT use equipment that has exposed wiring, damaged switches, covers or guards.
- Do NOT use electrical equipment in wet conditions or in damp locations.
- Do NOT use electrical cords to lift, move or carry equipment.
- Do NOT coil or knot electrical cords, and ensure electrical cords are not trip hazards.

General Service Information

- The equipment must be serviced or repaired at authorised service centres by qualified personnel only.
- Replacement parts must be original equipment manufacturer (OEM) to ensure equipment safety is maintained.
- Do NOT attempt any maintenance or repair work not described in this manual.
- After use, the equipment and components may still be hot – allow the equipment to cool and disconnect spark plugs and/or electrical power sources and/or batteries from it before adjusting, changing accessories, or performing repair or maintenance.
- Do NOT adjust while the equipment is running.
- Perform service-related activities in suitable conditions, such as a workshop.
- Replace worn, damaged or missing warning/safety labels immediately.

Child Choking Hazard!



- **WARNING: CHOKING HAZARD - CHILDREN UNDER 8 YRS. CAN CHOKE OR SUFFOCATE ON SMALL PARTS. ADULT SUPERVISION REQUIRED.**
- Carefully inspect anything a baby or child could gain access to, including this product & packaging.
- Dangers include anything of a size that could become stuck or lodged in a baby or child's airway.
- Dangers include things like raw, hard fruit and vegetable pieces, large pieces of meat, bones or sausage skins, popcorn, nuts, hard lollies and corn chips, small magnets and batteries, coins, beads, marbles and small uninflated balloons, broken toys and smaller toys, buttons, keys, and coins. But there are also many more.
- Pay particular attention to accessories, nuts, bolts, screws, washers, caps, covers, loose parts, parts that could be removed or break off, pieces of packaging, staples, tape etc.
- In the case of any doubt, secure the item of concern in an appropriate manner, or completely remove the possibility of access by a baby or child.

HAZARDOUS COMPONENTS!

- **BE AWARE THAT THE EQUIPMENT MAY INCLUDE HAZARDOUS COMPONENTS, SUCH AS BLADES, HOT SURFACES AND MOVING PARTS.**
- **MOVING BLADES CAN CAUSE SERIOUS INJURY AND EVEN DEATH IF USED IMPROPERLY OR WITHOUT SUFFICIENT PPE.**
- **DO NOT USE THIS EQUIPMENT ON UNEVEN SURFACES AND ALWAYS MAINTAIN GOOD BALANCE WHEN USING THIS EQUIPMENT. FAILURE TO DO SO MAY CAUSE SERIOUS INJURY.**
- **MAINTAIN A SECURE GRIP OF THE TRIGGER ASSEMBLY AT ALL TIMES.**
- **WARNING: PACKAGING MATERIALS ARE NOT TOYS. KEEP PLASTIC BAGS, FILM AND SMALL PARTS AWAY FROM CHILDREN. RISK OF SUFFOCATION AND SWALLOWING.**

CO WARNING!

⚠ DANGER ⚠

Using an engine or wood/charcoal/gas fuelled appliance indoors CAN KILL YOU IN MINUTES. Engine exhaust and wood/charcoal/gas fumes contain carbon monoxide. This is a poison you cannot see or smell.

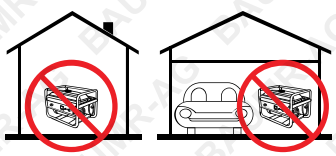

NEVER use inside a building, home, garage, boat, caravan or tent EVEN IF doors and windows are open.

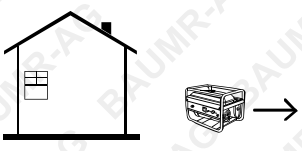

Only use OUTSIDE and far away from windows, doors, and vents.

Avoid other hazards - READ MANUAL BEFORE USE.

GENERAL:
- Do not operate in a hazardous location. Such areas include where there is a risk of explosion of petrol fumes, leaking gas or explosive dusts.
- Do not operate in a confined area where exhaust gases or wood/charcoal/gas fumes could reach dangerous concentrations.

PRODUCTS FEATURING AN ENGINE
- Follow all warnings in the section titled "GENERAL".
- Explosion hazard - never smoke while refuelling.
- Take care not to spill fuel. When refuelling the engine, ensure that the engine has been allowed to cool. Prevent spilling of fuel as this may also ignite with a hot engine.
- Never refuel while engine is running.

GENERATORS
- Follow all warnings in the sections titled "GENERAL" and "PRODUCTS FEATURING AN ENGINE".
- The output of this generator is potentially lethal. The generator should not be connected to a fixed electrical installation except by an appropriately licensed person.
- Not weatherproof – protect your machine. This machine is not weatherproof and should not be exposed to direct sunlight, high ambient temperature, damp conditions, wet conditions or high humidity conditions.

© Baumr-AG

Proper Use

The ride-on mower is designed only for mowing lawns. Do not use it for any other purpose.

Before starting work, ensure that all guards and safety devices are correctly fitted and functioning.

- The mower is designed to be operated by one person only.
- The operator is responsible for the safety of other people in the work area.
- Observe all safety and hazard labels on the mower.
- Keep all safety and hazard labels clean, legible and securely attached.
- Use the mower only when it is in good working condition and in accordance with these instructions.
- Stop work immediately if a fault could affect safe operation.
- Follow all safety, operating and maintenance instructions provided by the manufacturer.
- Comply with applicable safety and accident-prevention requirements.
- Repairs, maintenance and servicing should only be carried out by suitably trained persons who understand the hazards involved.
- Unauthorised modifications may result in serious injury or damage and may void the warranty.
- Use only original spare parts and accessories approved by the manufacturer.
- Any use other than that described in this manual is considered improper use. The manufacturer is not liable for injury or damage resulting from improper use.
- This mower is not intended for commercial or industrial use.
- Do not operate the mower if working conditions are unsafe.

The mower is intended for private domestic use, such as maintaining small to medium-sized lawns. It is not intended for use in public facilities, sporting areas, parks, agriculture, forestry or similar commercial applications.

The mower must not be used for:

- Cutting creepers or climbing plants.
- Shredding or chopping tree or hedge cuttings.
- Clearing paths by vacuuming or blowing.
- Clearing snow.
- Maintaining roof lawns.
- Levelling uneven ground, including molehills.
- Transporting grass clippings, except in the grass catcher designed for this purpose.
- Use on public roads.
- Carrying passengers, including children, or animals.
- Towing loads.
- Driving or powering other tools or attachments unless specifically approved by the manufacturer.
- **WARNING: READ THIS MANUAL CAREFULLY BEFORE USING THE MOWER. IF THE MOWER IS TRANSFERRED TO ANOTHER PERSON, PROVIDE THESE INSTRUCTIONS WITH IT.**

Safety Instructions

These instructions identify important safety information using warning symbols.

CAUTION

Observe all safety precautions to reduce the risk of injury and property damage. Read all operating and safety instructions carefully before using the mower.

Keep this manual in a safe place for future reference. If the mower is given or sold to another person, provide this manual with it.

The following persons must not use the mower:

- Children.
- Persons with reduced physical, sensory or mental capabilities unless they are appropriately supervised and capable of operating the mower safely.
- Persons who are unfamiliar with these instructions.
- Persons who are tired, unwell or affected by alcohol, drugs or medication that may impair their reactions.

Children must not operate the mower. Follow any applicable local regulations regarding minimum operator age.

The mower must only be operated by persons who are physically and mentally capable of using it safely.

If you have a medical condition that may affect your ability to operate the mower safely, seek medical advice before use.

Do not operate the mower after consuming alcohol, taking recreational drugs, or taking medication that may impair concentration, judgement or reaction time.

Safety of Personnel

CAUTION: RISK OF INJURY FROM VIBRATION. PROLONGED EXPOSURE TO VIBRATION MAY AFFECT THE CIRCULATORY OR NERVOUS SYSTEM, PARTICULARLY IN PEOPLE WITH EXISTING CARDIOVASCULAR CONDITIONS. SEEK MEDICAL ADVICE IF YOU EXPERIENCE SYMPTOMS THAT MAY BE RELATED TO VIBRATION.

Possible symptoms include:

- Numbness
- Pain

- Muscle weakness
- Skin discolouration
- Tingling or pins and needles

Hold the steering wheel firmly, but not excessively tightly, with both hands in the designated grip areas. Plan your work to include regular breaks and avoid prolonged periods of continuous operation.

WARNING: THIS MACHINE MAY GENERATE AN ELECTROMAGNETIC FIELD DURING OPERATION. THIS FIELD MAY INTERFERE WITH SOME ACTIVE OR PASSIVE MEDICAL IMPLANTS. PERSONS WITH MEDICAL IMPLANTS SHOULD CONSULT THEIR DOCTOR AND THE IMPLANT MANUFACTURER BEFORE OPERATING THE MOWER.

Clothing and Equipment

- Wear sturdy footwear with non-slip soles.
- Do not operate the mower barefoot or while wearing sandals.
- Wear long trousers and close-fitting clothing.
- Do not wear loose clothing, jewellery, ties or scarves that could become caught in moving parts.
- Secure long hair before operating, maintaining or transporting the mower.
- Wear suitable protective gloves during maintenance and cleaning.
- Wear suitable eye protection when sharpening or servicing the cutting blade.

Working with the Mower

- Do not operate the mower near other people, especially children, or animals.
- Ensure that discharged grass or debris is never directed towards other people.
- Do not operate the mower in rain, thunderstorms or other hazardous weather conditions, particularly where there is a risk of lightning.

Exhaust Gases

WARNING: RISK OF FATAL CARBON MONOXIDE POISONING.

Stop the engine immediately if you experience symptoms such as:

- Nausea
- Impaired vision
- Hearing disturbance
- Dizziness
- Reduced concentration

These symptoms may be caused by excessive exposure to exhaust gases.

The engine produces toxic exhaust gases during operation, including carbon monoxide, which is colourless and odourless.

- Never operate the mower in enclosed or poorly ventilated areas.
- Always operate the mower outdoors in well-ventilated areas.
- Keep the exhaust outlet clear and free from obstructions.
- Prevent grass, leaves and other debris from accumulating around the exhaust area.

Workplace Safety

Before operating the mower:

- Carefully inspect the entire work area.
- Remove stones, sticks, wire, bones and other objects that could be picked up and thrown by the mower.
- Clearly mark fixed obstacles that cannot be removed, such as tree stumps, roots or other hazards.
- Check for holes, depressions and other hidden hazards.
- Take extra care when mowing long grass, as hidden obstacles may be difficult to see.

Working Near Hazards

Use the mower with extreme care near slopes, terraces, ditches and embankments. Maintain a safe distance from these hazards at all times.

Take particular care in areas with poor visibility, including near bushes, trees and other obstacles where people, especially children, or animals may be hidden.

Stop the mower immediately and disengage the cutting blades if anyone enters the mowing area.

Always watch the area in front of the mower and be alert for obstacles so that you can avoid them in time.

Before reversing:

- Check the area behind the mower.
- Disengage the cutting blades unless reverse mowing is absolutely necessary.
- Reverse slowly and with extreme care.
- Check the entire area behind the mower before beginning to mow in reverse.

When working with others, clearly communicate your intended movements and maintain a safe distance.

Reduce speed before changing direction to maintain control and reduce the risk of the mower tipping over.

When operating near or crossing roads, be aware of other road users.

Take particular care when mowing near roads, bicycle paths and footpaths. Objects thrown by the mower can cause serious injury or property damage.

Handling Petrol

WARNING: PETROL IS POISONOUS AND EXTREMELY FLAMMABLE.

- Store petrol only in approved fuel containers.
- Ensure all fuel container and tank caps are securely tightened. Replace damaged caps immediately.
- Keep petrol away from sparks, naked flames, pilot lights, heat sources and other ignition sources.
- Do not smoke while handling or refuelling with petrol.
- Refuel outdoors only.
- Stop the engine and allow it to cool before refuelling.
- Never remove the fuel tank cap or add petrol while the engine is running or hot.
- Open the fuel tank cap slowly to release any pressure before removing it completely.
- Use a suitable funnel or filling spout to prevent petrol from spilling onto the engine, mower or ground.
- Do not overfill the fuel tank.
- Leave sufficient space in the tank for fuel expansion. Do not fill above the lower edge of the filler neck.

If petrol is spilled:

- Do not start the engine until the spill has been cleaned and the vapours have dispersed.
- Wipe up spilled petrol immediately.
- Change any clothing that has come into contact with petrol.

After refuelling, securely tighten the fuel tank cap. Do not operate the mower without the correct fuel tank cap fitted.

Regularly inspect the fuel lines, fuel tank, fuel tank cap and connections for damage, deterioration, looseness or leaks. Replace damaged components before operating the mower.

If the fuel tank must be drained, do so outdoors in a well-ventilated area.

Never store or dispose of petrol or lubricants in drink bottles, food containers or similar containers. This may result in accidental ingestion, particularly by children.

Never store the mower indoors with petrol in the tank where fuel vapours may reach an open flame, spark or other ignition source.

Keep the mower and fuel containers away from heaters, welding equipment and other heat or ignition sources.

WARNING: EXPLOSION AND FIRE HAZARD.

If a leak or defect is found in the fuel tank, fuel cap, fuel lines or other fuel system components during operation, stop the engine immediately. Have the mower inspected and repaired by a qualified service technician before further use.

Battery Safety

Improper use of the battery or charger may result in electric shock, fire, serious injury or death.

During Operation

- Keep the battery and charger dry.
- Do not expose the battery or charger to rain or wet conditions.
- Do not allow water to enter the AC plug or charger.
- Do not short-circuit the battery terminals.
- Never insert metal objects or other conductive materials into the battery contacts.

Charging the Battery

- Charge the battery only with the charger specified by the manufacturer.
- Do not use the charger with batteries for which it was not designed.
- Keep the charger and battery dry and protected from moisture.
- When disconnecting the charger, pull the plug rather than the cord.
- Do not use the charger if the plug or power cord is damaged.
- If the power cord is damaged, replace the charger. Do not attempt to repair the cord.
- Do not use the charger if it has been dropped, struck or otherwise damaged.
- Do not disassemble, modify or attempt to repair the charger.
- Disconnect the charger from the power outlet before cleaning.
- Do not short-circuit the battery terminals.
- Never insert objects into the battery contacts.
- This charger is not intended for use by persons with reduced physical, sensory or mental capabilities, or persons lacking experience and knowledge, unless they are supervised or instructed by a person responsible for their safety.
- Children must be supervised to ensure they do not play with the charger.

Storing the Battery

- Store the battery and charger in a dry location.
- Protect them from rain, moisture and wet conditions.

Before Adjustment or Repair

Remove the battery from the battery tray before carrying out adjustments, servicing or repairs.

WARNING: BATTERY CHEMICALS ARE TOXIC AND CORROSIVE. FIRE OR EXPLOSION MAY CAUSE SEVERE BURNS, SERIOUS INJURY OR DEATH.

Safety Information for Ride-On Mowers

Starting

- Start the mower only while seated in the operator's seat.
- Start the mower on level ground. Do not start it on a slope.
- Start and operate the engine only in a well-ventilated area.
- Never operate the engine in an enclosed or poorly ventilated space.
- Before starting the engine:
  - Disengage the cutting blades.
  - Disengage attachments and the drive system.
  - Fully depress the brake pedal.
- Keep your feet well clear of the cutting deck and blades when starting.
- Do not start the engine while standing in front of the discharge chute.
- Never lift, move or carry the mower while the engine is running.
- Do not operate the mower at excessive speed.
- Never start the engine by short-circuiting the starter terminals. Bypassing the normal starting circuit may cause the mower to move unexpectedly.
- Do not start the engine if you can smell petrol.

WARNING: FIRE AND EXPLOSION HAZARD.

Working

WARNING: RISK OF SERIOUS INJURY.

- Keep hands and feet away from the cutting deck and rotating blades.
- Never reach under the mower while the blades are rotating.
- Never touch a rotating blade.
- Keep clear of the discharge opening at all times.
- Maintain a safe distance from rotating and moving parts.
- Operate the mower only in daylight or under good artificial lighting.
- Disengage the cutting blades when:
  - Driving across areas other than grass.
  - Travelling without mowing.
- When not mowing, raise the cutting deck to its highest position.
- Avoid hidden obstacles such as:
  - Irrigation systems
  - Posts
  - Water valves
  - Foundations
  - Electrical cables
  - Other fixed objects
- Never intentionally drive over foreign objects.
- Keep both hands firmly on the steering wheel while driving.

Operating on Uneven Ground

Take extra care when driving on lawns and other uneven surfaces. The steering wheel may move suddenly due to holes, bumps or other obstacles.

WARNING: RISK OF INJURY TO HANDS AND FINGERS.

Always drive at a safe and appropriate speed.

Empty the grass catcher only while seated in the operator's seat.

Before emptying the grass catcher:

- Disengage the cutting blades.
- Wait until the blades have come to a complete stop.

Switch off the drive, stop the engine, engage the parking brake and remove the ignition key:

- Before clearing blockages, including blockages in the discharge chute.
- Before inspecting, cleaning or working on the mower.
- If the cutting blade strikes an object. Inspect the mower and cutting system for damage and carry out any necessary repairs before restarting.
- If the mower begins to vibrate excessively. Inspect it immediately.
- Before leaving the mower unattended.
- Before transporting the mower.

Stop the engine and wait until the cutting blades have come to a complete stop:

- Before refuelling.

- Before removing the grass catcher.

Residual Risks and Accident Prevention

Ergonomics and Personal Protective Equipment

Failure to follow ergonomic principles or use appropriate personal protective equipment may result in serious injury.

- Use the required personal protective equipment.

Human Error and Misuse

- Remain alert and fully focused while operating the mower.
- Residual risks cannot be completely eliminated.

Noise Hazard

Prolonged exposure to high noise levels may cause hearing damage.

- Always wear suitable hearing protection.

In Case of Emergency

If an accident occurs:

- Stop the mower immediately, if it is safe to do so.
- Provide appropriate first aid.
- Seek qualified medical assistance as soon as possible.

General Safety and Maintenance

- Use the mower only when it is in good working condition.
- Maintain and clean the mower regularly.
- Operate the mower only as intended.
- Do not overload the mower.
- Have the mower inspected if necessary.
- Switch off the mower when not in use.
- Wear suitable protective gloves.

When using the petrol lawn mower for extended periods, vibration may cause circulatory problems.

The duration of safe use varies from person to person and may be affected by:

- Circulatory problems in the hands.
- Low outside temperatures.
- Prolonged periods of use.

Wear warm work gloves and take regular breaks during extended operation.

Engine Safety

CAUTION

- This engine is supplied without engine oil. Add the correct engine oil before starting.
- Operating the engine without oil may cause severe engine damage and may void the warranty.

WARNING: PETROL AND FIRE HAZARD

- Petrol and its vapours are highly flammable and explosive. Fire or explosion may cause severe burns, serious injury or death.

When Refuelling

- Stop the engine and allow it to cool for at least 2 minutes before removing the fuel cap.
- Refuel outdoors or in a well-ventilated area.
- Do not overfill the fuel tank.
- Keep petrol away from sparks, naked flames, pilot lights, heat and other ignition sources.
- Regularly inspect fuel lines, the fuel tank, fuel cap and fittings for cracks or leaks. Replace damaged components before use.

When Starting the Engine

- Ensure the spark plug, muffler, fuel cap and air filter are correctly fitted.
- Do not crank the engine with the spark plug removed.
- If petrol has spilled, allow it to evaporate completely before starting the engine.
- If the engine is flooded, set the choke to the OPEN/RUN position, move the throttle to FAST, then crank until the engine starts.

During Operation

- Do not use the choke to stop the engine.

During Transport

- Transport the mower with the fuel tank empty or with the fuel shut-off valve closed, if fitted.

During Storage

- Do not store the mower near furnaces, heaters, water heaters or other appliances with pilot lights or ignition sources.
- Keep the mower away from sparks, naked flames and other sources that could ignite petrol vapours.

WARNING: IGNITION HAZARD

- Starting the engine produces sparks. Sparks may ignite nearby flammable gases or vapours.

- Do not start the engine if there is a natural gas, LPG or other flammable gas leak nearby.
- Do not use pressurised starting fluids, as their vapours are flammable.

WARNING: STARTER CORD KICKBACK

- Rapid retraction of the starter cord may pull your hand and arm towards the engine faster than you can release it. This may cause fractures, bruising or other injuries.
- Pull the starter cord slowly until resistance is felt, then pull rapidly.
- Remove unnecessary loads or attachments before starting the engine where applicable.

WARNING: ROTATING PARTS

- Rotating parts can contact or entangle hands, feet, hair, clothing or accessories, causing serious injury.
- Operate the mower only with all guards and covers correctly fitted.
- Keep hands and feet away from rotating parts.
- Secure long hair before operation.
- Do not wear loose clothing, jewellery, drawstrings or other items that could become caught.

WARNING: CARBON MONOXIDE

- Engine exhaust contains carbon monoxide, a colourless and odourless poisonous gas. Breathing carbon monoxide may cause nausea, dizziness, fainting or death.
- Start and operate the engine outdoors only.
- Never operate the engine inside a building, garage or other enclosed or poorly ventilated area.

WARNING: HOT SURFACES AND FIRE RISK

- The engine, exhaust and muffler become extremely hot during operation and may cause severe burns.
- Combustible debris such as grass, leaves and brush may ignite.
- Allow the engine, exhaust and muffler to cool before touching them.
- Remove accumulated grass, leaves and other debris from around the engine and muffler.
- Keep combustible materials away from hot engine components.
- Keep the spark arrester, if fitted, clean and in good working condition.

DANGER

Running combustion engines in confined areas CAN KILL IN MINUTES. Engine exhaust fumes contain carbon-monoxide – a deadly gas that you cannot smell or see.



NEVER run a combustion engine in confined areas EVEN IF windows and doors are open. ONLY run petrol engines OUTDOORS and away from doors, windows, and vents.

Do not operate the equipment in hazardous locations, such as where there may be a risk of fire or explosions from flammable liquids, gases or dust.

Do not operate the equipment in confined areas where exhaust gases, smoke or fumes could reach dangerous concentrations.

Do not refuel a combustion engine while it is running on or hot.

Never smoke while refueling combustion engines or handling flammable substances.

For generators, the electrical output is potentially lethal and must only be connected to a fixed electrical installation by an appropriately licensed person.

Be aware that the equipment may include hazardous components, such as blades, hot surfaces and moving parts.

Handle any flammable substance with extreme caution.

Safety Symbols

The product may have safety warning labels attached to it, explained below. Understand the symbols on your product and their meanings. If any stickers become unreadable, unattached etc., replace them.



Flammable Material Hazard
Flammable liquids, gases, or substances etc may present. Avoid ignition sources and open flames. Danger of fire.



Read User Manual
Read and fully understand product safety warnings, operation, procedures etc before using the product.



Use Hand Protection
Wear appropriate hand protection and take due care as the product or use of the product may present hand hazards.



Carbon-Monoxide Hazard
Do not use the product in confined areas or without adequate ventilation. Carbon-monoxide poisoning can be fatal.



Electrocution / Electrical Shock Hazard
High voltage or high current electricity may be present or required by the product. Take due care when handling electrical products, cables, plugs and leads. Electrical shock can be fatal.



Toxic Fumes / Dust Hazard
Using the product or by-products from use may produce fumes, smoke or particles that could be harmful if inhaled. Wear appropriate breathing protection and have adequate ventilation.



Explosive Material Hazard
Combustible liquids, gases, or substances etc may be present. Avoid ignition sources and open flames. Danger of explosion.



Cutting / Amputation Hazard
The product may have blades, edges or mechanical devices that can cause severe cut injury to fingers, limbs etc. Take due care when handling and using the product.



Crush Hazard
The product may have blades, edges or mechanical devices that can cause severe crush injury to fingers, limbs etc. Take due care when handling and using the product.



Single Operator Only
The product must be operated by a single person only. More than one person operating the product may introduce additional hazards.



Use Face Protection
Wear appropriate full-face protection and take due care as the product or use of the product may present face and eye hazards.



Use Foot Protection
Wear appropriate foot protection and take due care as the product or use of the product may present foot hazards.



Use Eye / Ear / Head Protection
Wear appropriate eye and / or ear and / or head protection and take due care as the product or use of the product may present eye, hearing, and head hazards.



Running Hazard
Do not run on or near the product as doing so may present a fall hazard.



Diving Hazard
Do not dive into the product as doing so may present a neck / head injury hazard.



Adult Supervision Required
Always supervise children and other users of a product to prevent drowning or injury.



Skin Penetration / Puncture Hazard
The product may produce pressure, emit liquids or objects that can cause severe injury to fingers, limbs, blood etc. Take due care when handling and using the product.



Hot Surface Hazard
Be aware that the product may produce high temperatures and hot surfaces that can cause burn injuries.



Flying Debris Hazard
Be aware that the product or use of the product may present hazards produced by flying debris. Wear appropriate clothing and protective devices.



Moving Parts Hazard
Be aware that the product contains or uses mechanical devices that move or rotate. Always wait for moving parts to stop fully before handling the product, adjusting, maintenance etc.

© Baumr-AG

 **Carbon-Monoxide Hazard** Do not use the product in confined areas or without adequate ventilation. Carbon-monoxide poisoning can be fatal.	 **Pull Hazard** Be aware that the product contains or uses mechanical devices that can pull in objects and can cause severe injury to fingers, limbs etc. Take due care when handling and using the product.	 **Slope / Fall Injury Hazard** Be aware that using the product on sloping surfaces or in slippery conditions may present additional dangers from falls and contact with blades, moving parts, hot surfaces etc.	 **"Slam Dunk" Warning** Do NOT attempt "slam dunk" manoeuvres as this may result in severe injury due to falling, product breakage or collapse etc.
 **Electrocution / Electrical Shock Hazard - Outdoor** High voltage or high current electricity may be present or required by the product. Do NOT use in rain, damp, or wet conditions. Electrical shock can be fatal.	 **Electrocution / Electrical Shock Hazard - Disconnect** High voltage or high current electricity may be present or required by the product. Always disconnect the product from the electrical supply before handling the product, adjusting, maintenance etc.	 **Power Line Electrocution Hazard** High voltage / high current power lines may be present. Use extreme caution to avoid contact or interference with power lines. Electrical shock can be fatal.	 **"Kick-Back" Hazard** High level of "kick-back" hazard that can cause the machine to suddenly rotate towards operator. Kick-back injury can be fatal.
 **Winch Operator Position Hazard** Do NOT stand between winch and load. Do NOT use winch to move people.	 **Winch Lift Hazard** Do NOT LIFT load vertically. Use machine to PULL only.	 **Cable Hazard** Ensure that load bearing cable is not kinked or knotted.	 **Winch Cable Hazard** Ensure that there is a minimum number of cable coils on winching mechanism.
 **Winch Hook Hazard** Carry hook to load – do NOT throw or run.	 **Flash / Blinding Hazard** Wear appropriate eye protection for welding. Direct exposure to weld arcs may cause permanent eye injury.	 **Laser Hazard** Laser may be in use – do NOT look directly at laser or allow others to.	 **Choking Hazard** Children under 8 yrs. Can choke or suffocate on small parts. Adult supervision required.

Table of Contents

Safety **2**
Safety Symbols 10
Parts Identification **14**
Assembly **16**
Installing the Seat 16
Connecting the Battery 17
Installing the Steering Wheel Assembly 18
Installing the Speed Control Lever 19
Installing the Grass Catcher Assembly 19
Before First Use **22**
Checks Before Use 22
Preparing the Area to Be Mown 22
Adding Engine Oil 23
Adding Petrol 23
Adjusting the Seat 24
Engaging the Parking Brake 25
Setting the Cutting Deck Height 25
Operation **27**
Starting the Engine with the Electric Starter 27
Starting the Engine with the Recoil Starter 27
Driving Without Mowing 28
Driving and Mowing 29
Stopping the Mower 29
Tips for Proper Mowing 30
Working on Slopes 30
Stopping and Parking 30
General Mowing Tips 31
Mowing 31
Blade Safety 32
Emptying the Grass Catcher While Seated 32
Removing the Grass Catcher for Emptying 32
After Mowing 33
Reverse Mowing Function 33
Mode 1: Rear Grass Collection Mode 34
Mode 2: Mulching Mode 34
Mode 3: Side-Discharge Mode 35
Lead-Acid Battery Care and Maintenance **36**
Top 3 Battery Care Requirements 36

Maintenance and Cleaning **37**
Maintenance and Repairs 37
Cleaning 37
Maintenance 38
Tyres and Wheels 38
Brakes 38
Cutting Blade 38
Replacing the Blade 39
Checking the Engine Oil Level 40
Changing the Engine Oil 40
Air Filter Maintenance 41
Spark Plug Maintenance 42
Replacing the Fuse 42
Battery and Charger 42
Tyre Pressure 43
Repairs 43
Service Information 43
Storage and Transport **44**
Disposal and Recycling **45**
Troubleshooting **46**
Specifications **48**

Parts Identification

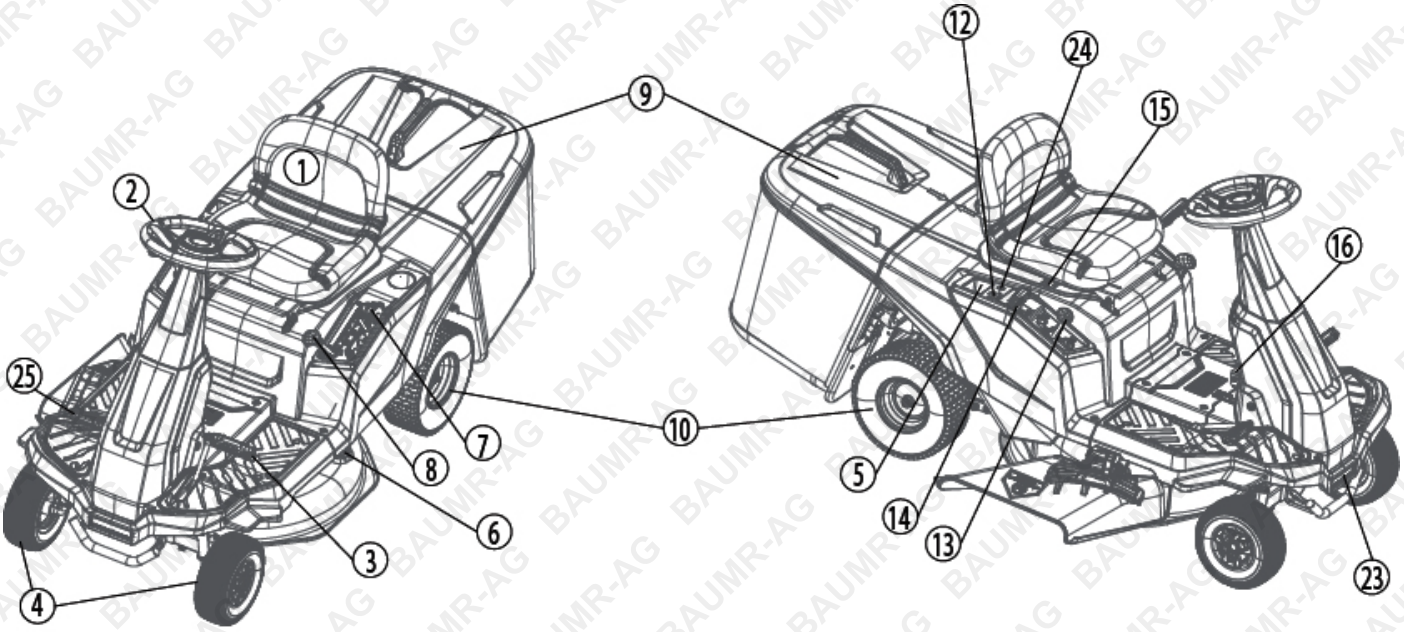

No.	Name	No.	Name
1	Seat	14	Throttle
2	Steering wheel	15	Seat adjustment
3	Brake pedal	16	Parking brake
4	Front tyres	17	Recoil starter
5	Cup holder	18	Fuel tank cap
6	Water hose connection	19	Air filter
7	Cutting height adjustment	20	Oil filler cap
8	Cutter clutch	21	Exhaust pipe
9	Grass catcher	22	Spark plug
10	Rear wheels	23	Headlight (optional)
11	Battery	24	Headlight switch (optional)

© Baumr-AG

No.	Name	No.	Name
12	Ignition switch	**25**	Accelerator pedal
13	Forward/reverse gear		

© Baumr-AG

Assembly

Installing the Seat

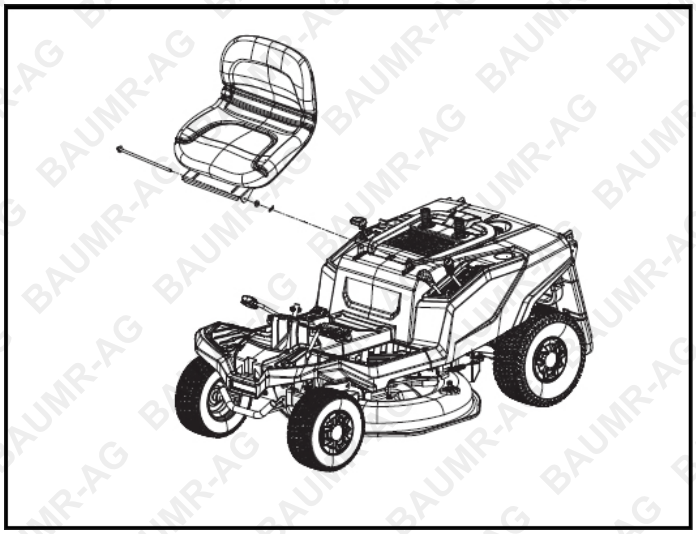

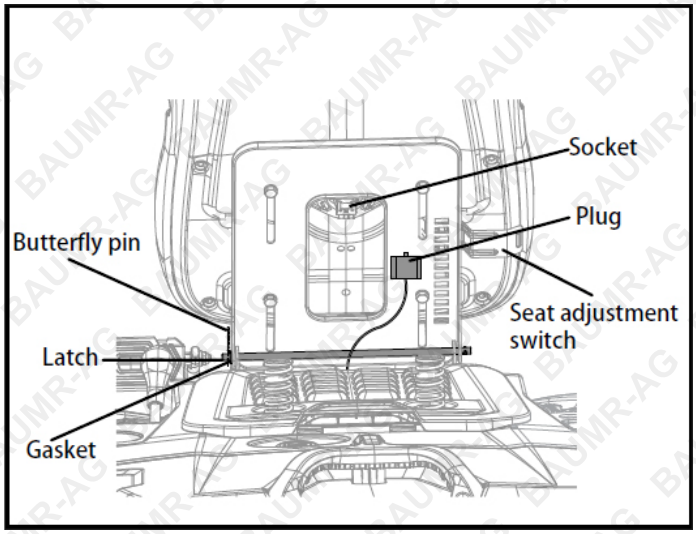

1. Install the pin, washers and retaining clip as shown in the diagram.
2. Connect the plug to the socket beneath the seat.
3. To adjust the seat forwards or backwards:
   a. Sit on the seat.
   b. Lift the seat adjustment lever with your right hand.
   c. Slide the seat forwards or backwards to the desired position.
   d. Release the adjustment lever to lock the seat in position.

Parts required: 1 pin, 1 retaining clip and 2 washers.

NOTICE: Keep the seat adjustment lever raised while moving the seat. Release it only after the seat is in the desired position.

Connecting the Battery

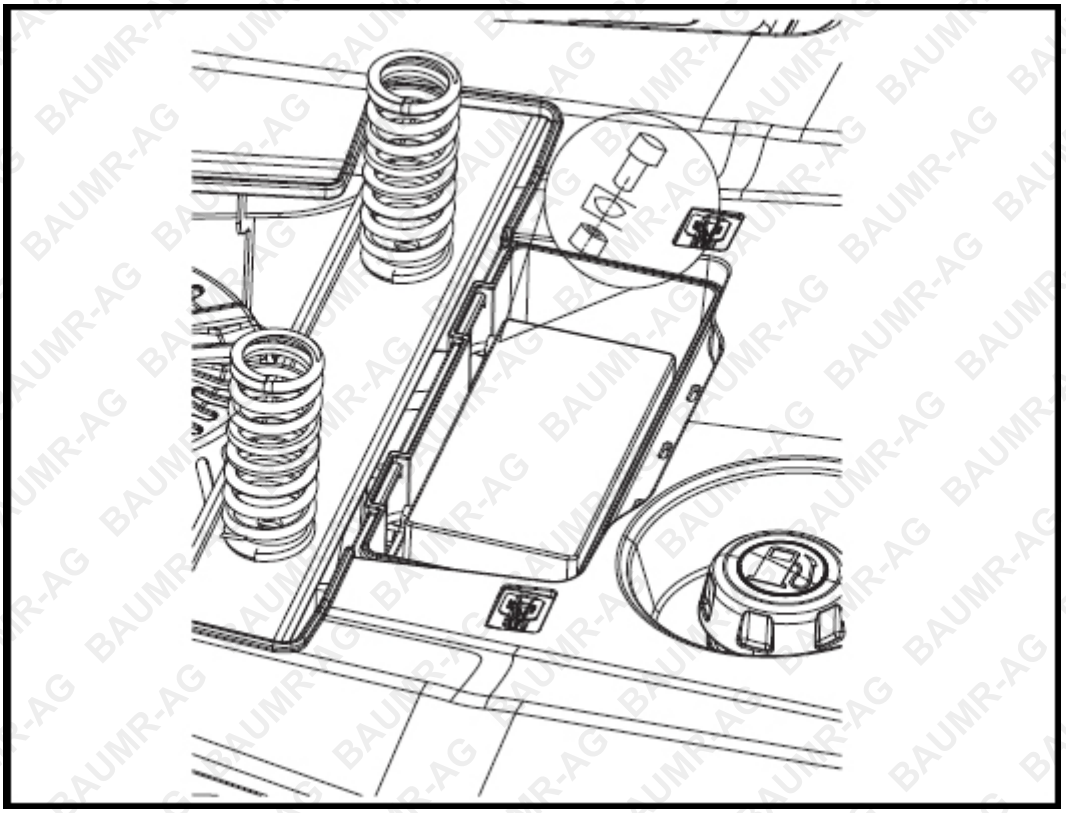

1. Connect the red cable to the battery's positive (+) terminal.
2. Connect the black cable to the battery's negative (–) terminal.
3. Secure both connections using the supplied screws and nuts.
4. Tighten the terminal fasteners to a torque of 8–12 N·m.

Parts required: 2 screws and 2 nuts.

© Baumr-AG

Installing the Steering Wheel Assembly

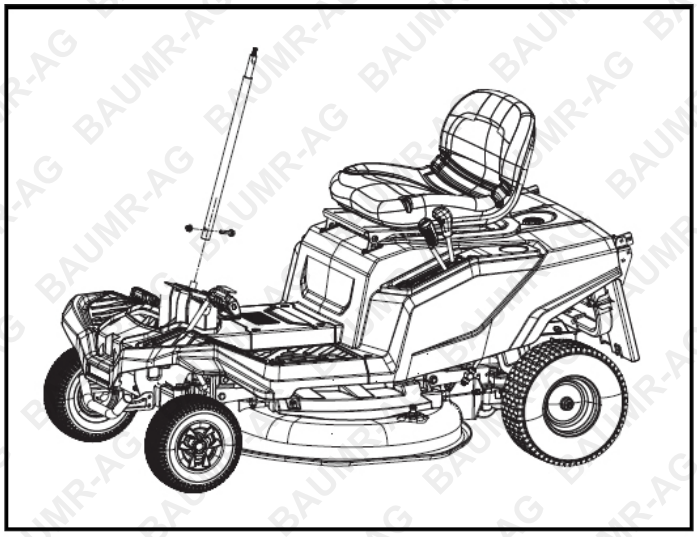

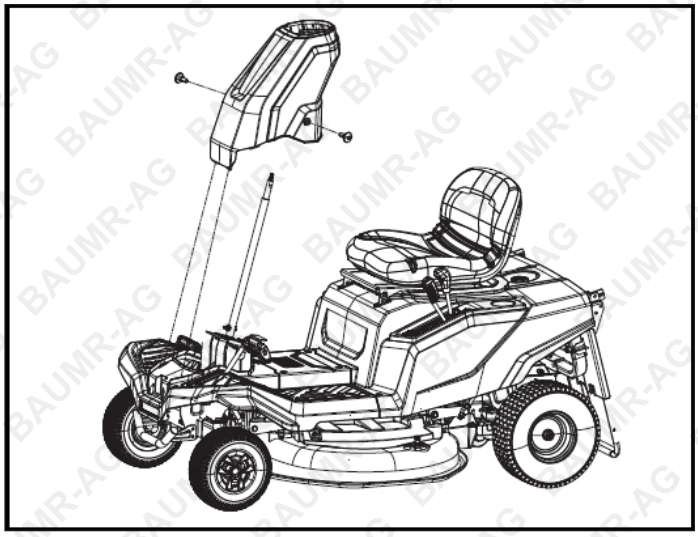

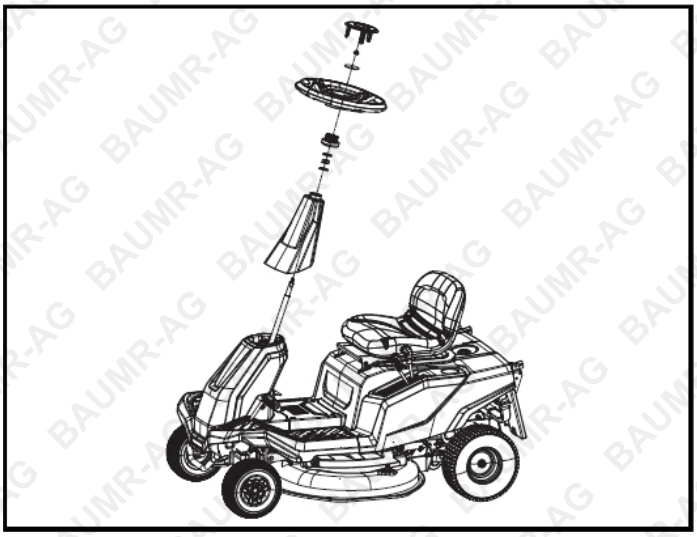

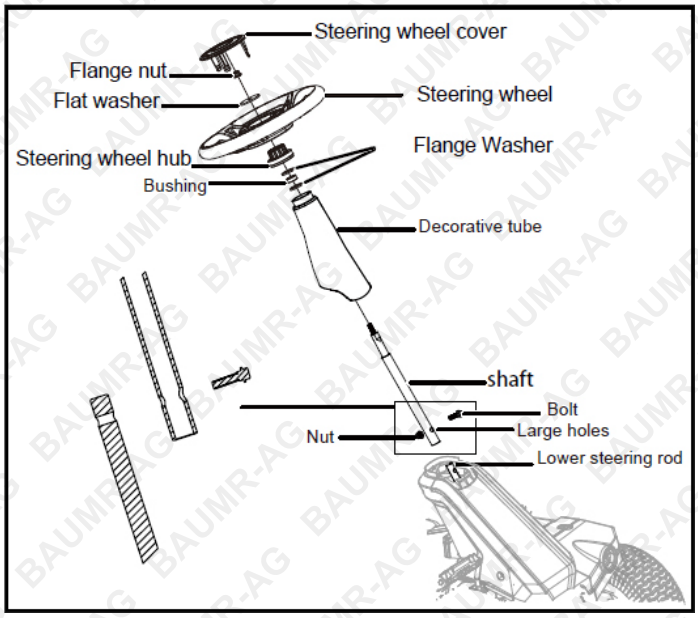

1. Insert the steering shaft into the lower steering column, aligning the mounting holes. Ensure the larger holes face forwards.
2. Insert the bolts and secure them with the flange nuts. Tighten to **25 ± 2 N·m**.
3. Fit the decorative tube over the steering shaft.
4. Install the components onto the shaft in the following order:
   - Flange washer
   - Bushing
   - Flange washer
   - Steering wheel hub
5. Fit the steering wheel and flat washer in the order and orientation shown in the diagram.
6. Align the mounting points of the steering wheel with the steering wheel hub, then secure with the flange nut. Tighten to **24 ± 2 N·m**.
7. Fit the steering wheel cover.

Parts required: 3 bolts, 2 nuts and 3 washers.

Installing the Speed Control Lever

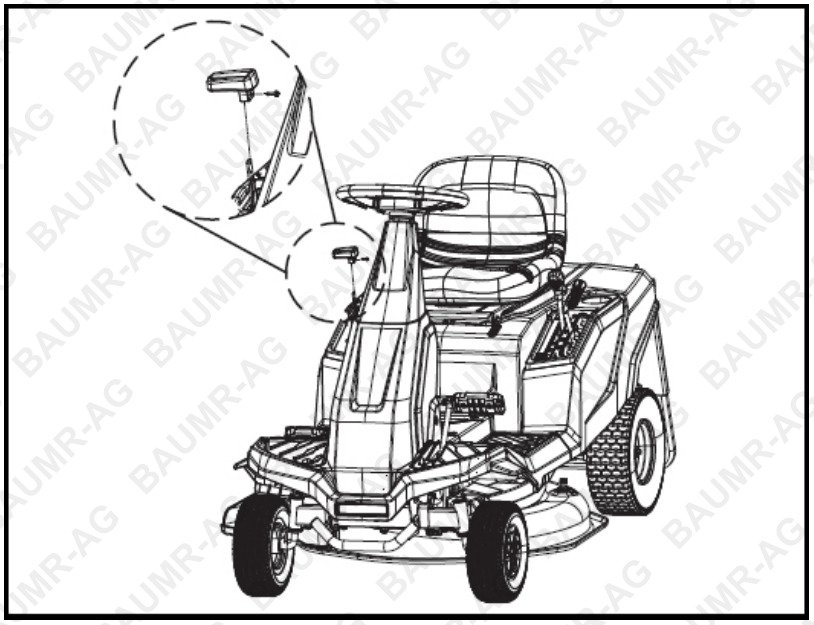

1. Fit the speed control lever in the position shown in the diagram.
2. Secure it with the supplied screw.

   Parts required: 1 screw.

Installing the Grass Catcher Assembly

1. Install the support brackets on both the left and right sides of the mower, as shown.

   Parts required: 4 bolts.

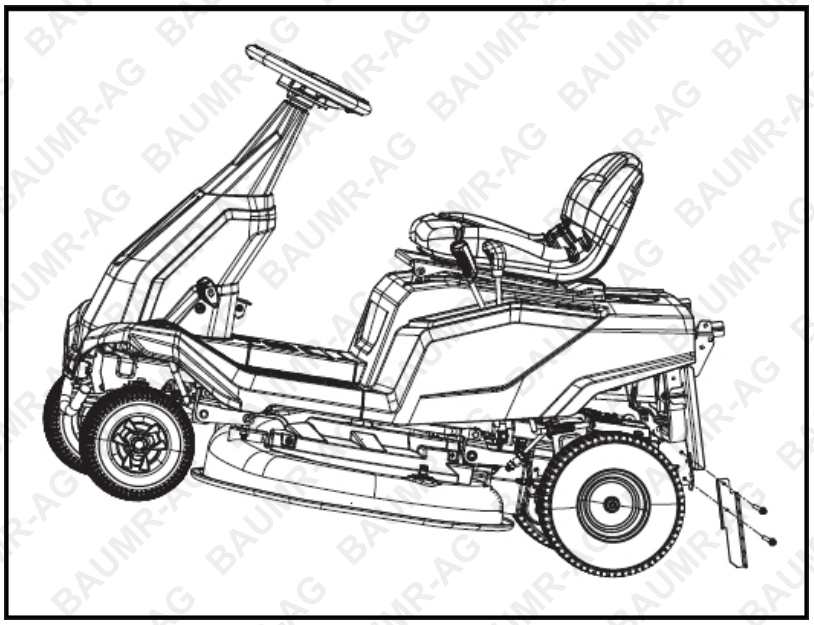

© Baumr-AG

2. Install the lower rear mounting components as shown in the diagram.

   Parts required: 7 bolts.

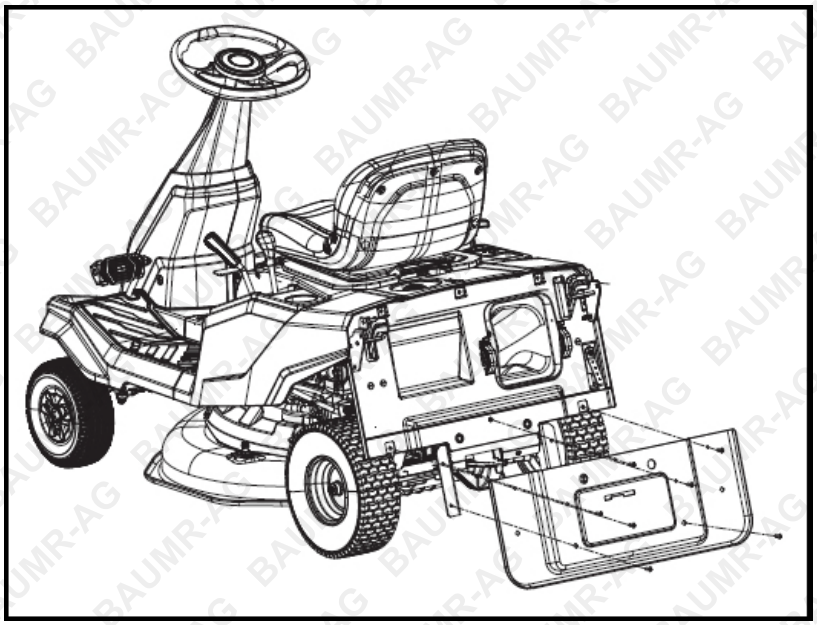

3. Assemble the grass catcher frame using the specified fasteners.

   Parts required:

   – 22 bolts
   – 12 nuts
   – 2 washers

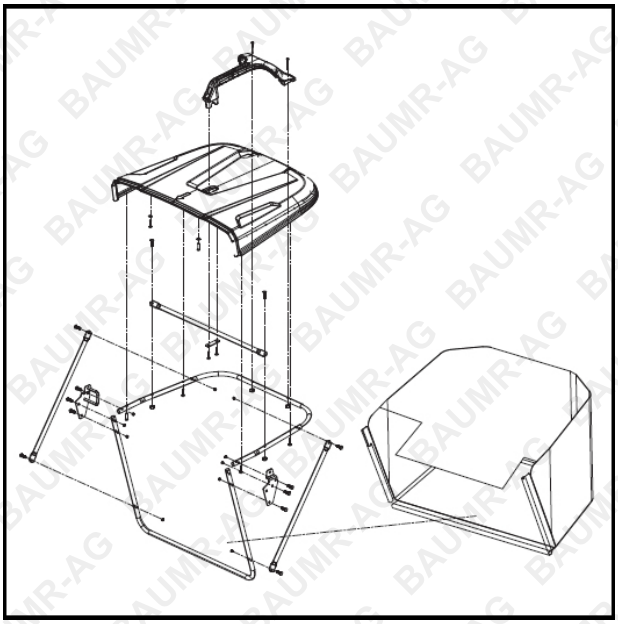

© Baumr-AG

4. Fit the grass catcher onto the rear of the mower.
5. Ensure the grass catcher is fully seated and securely attached before use.

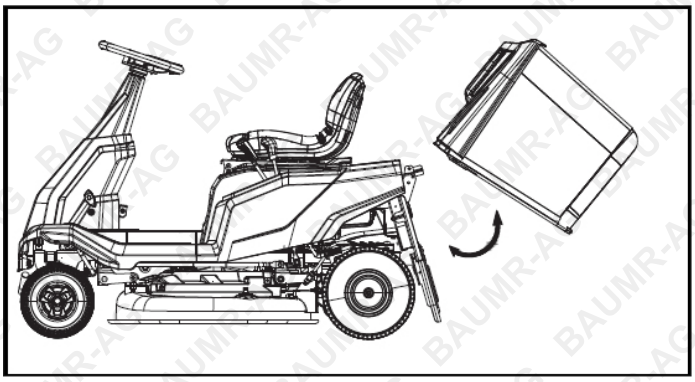

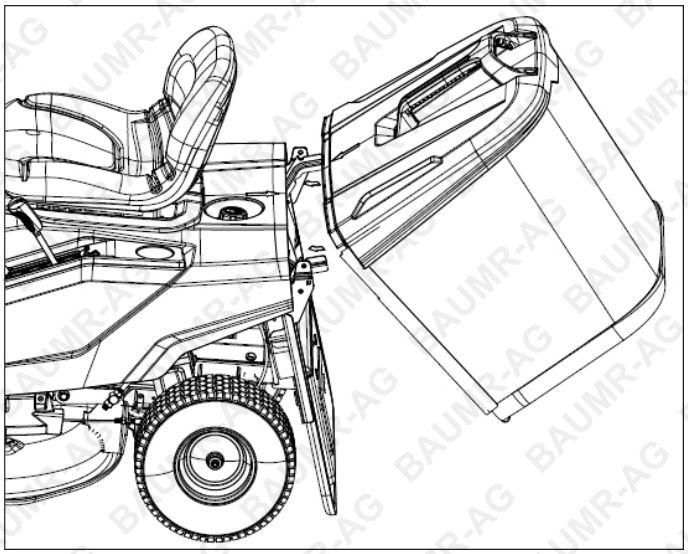

© Baumr-AG

Before First Use

Checks Before Use

Inspect the fuel system before each use, particularly visible components such as the fuel tank, tank cap and fuel hoses.

If fuel leaks or damage are found:

- Do not start the engine.
- Have the mower inspected and repaired by a qualified service technician before use.

Replace defective, worn or damaged parts before operating the mower. Replace any illegible or damaged safety labels and warning signs.

The discharge chute must be securely attached to the cutting deck. It must not be damaged and must be replaced by a qualified technician if necessary.

Check the braking system before each use.

Before operating the mower, check that:

- The cutting system, including the blade, blade clutch, blade brake, retaining pin and mounting bolts, is in good condition and securely fastened.
- The fuel tank cap is securely fitted.
- The fuel tank, fuel lines and fuel cap are in good condition.
- All safety devices are correctly fitted and functioning.
- The tyres are correctly inflated and free from excessive wear or damage.
- The frame and mounting points are in good condition.
- All screw and bolt connections are securely tightened.
- All required maintenance has been completed.

If necessary, have the mower inspected by a qualified service technician.

Preparing the Area to Be Mown

Before mowing:

- Carefully inspect the entire area.
- Remove stones, sticks, bones, wire, toys and other objects that could be picked up and thrown by the mower.
- Ensure that no other people or animals are present in the mowing area.

© Baumr-AG

Adding Engine Oil

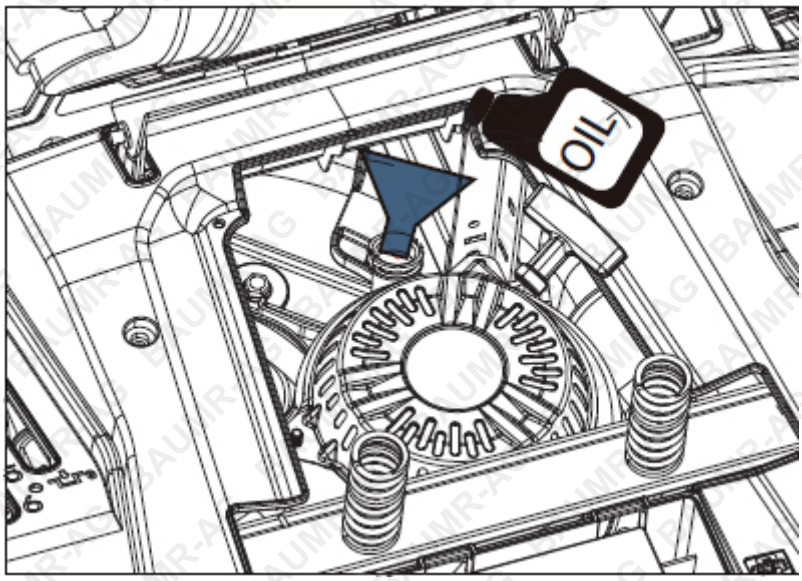

1. Place the mower on a level surface.
2. Remove the oil filler cap.
3. Place a funnel securely in the filler opening and add the recommended engine oil. Do not overfill.
4. Check the oil level using the dipstick.
5. Refit the oil filler cap securely.
6. Wipe away any spilled oil.

Adding Petrol

WARNING: Petrol is highly flammable and explosive.

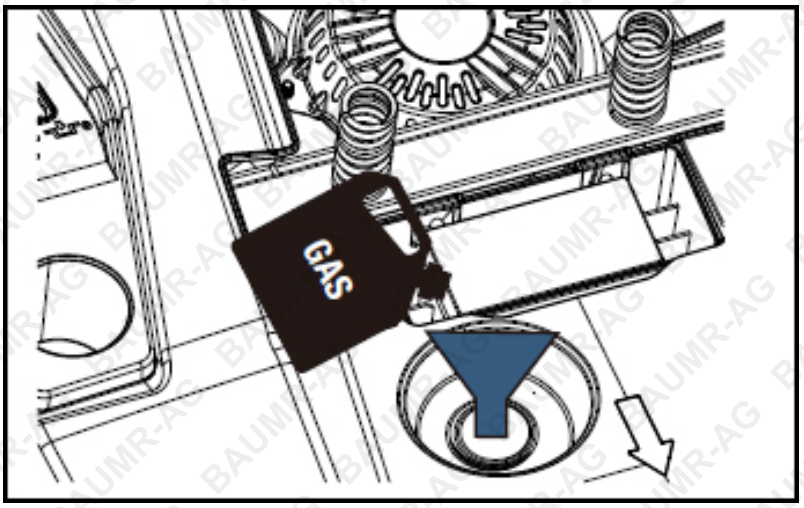

- Switch off the engine and allow it to cool before refuelling.
- Wear suitable protective gloves.
- Avoid skin and eye contact with petrol.
- Refuel outdoors or in a well-ventilated area.

- Fold the seat forwards to access the fuel tank.
- Clean around the fuel filler opening before removing the cap.
- Carefully open the fuel tank cap to release any pressure.
- Fill the tank only to the lower edge of the filler neck. Do not overfill.
- Refit and securely tighten the fuel tank cap.
- Wipe away any spilled petrol.
- Check the fuel tank and fuel lines for leaks.
- Move the mower at least 3 m away from the refuelling area before starting the engine.

WARNING: Use only an approved petrol container. Do not smoke or allow naked flames or sparks near the mower while refuelling.

Remove any spilled petrol or oil before starting the engine.

When adding petrol, use a suitable funnel to help prevent spills.

Adjusting the Seat

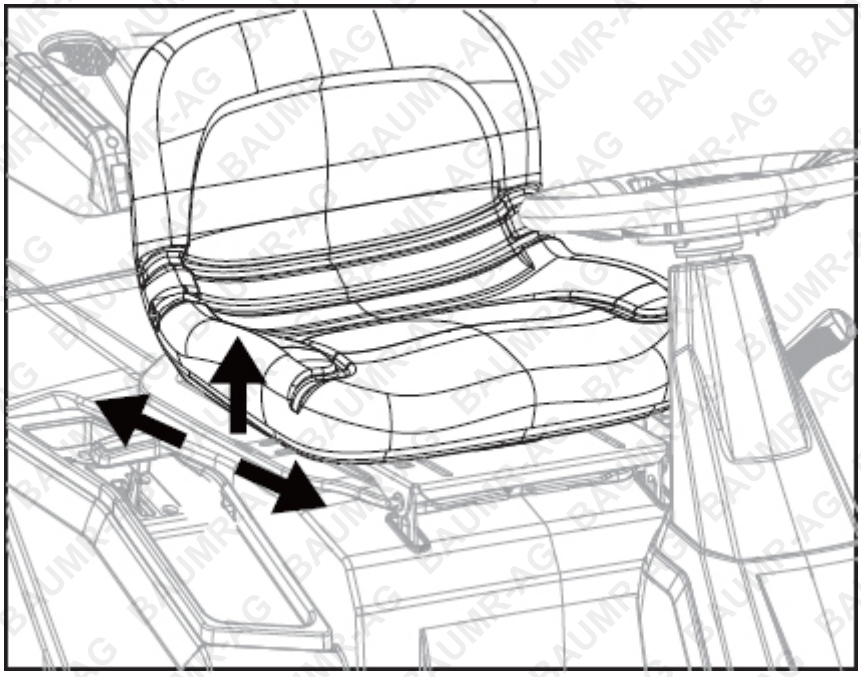

Before operating the mower, adjust the seat so that you can comfortably reach the brake pedal and parking brake.

To adjust the seat:

1. Move the controls to the STOP position and engage the parking brake.
2. Sit in the operator's seat.
3. Lift the seat adjustment lever.
4. While holding the lever, slide the seat forwards or backwards to the desired position.
5. Release the lever and ensure the seat is securely locked before operating the mower.

Engaging the Parking Brake

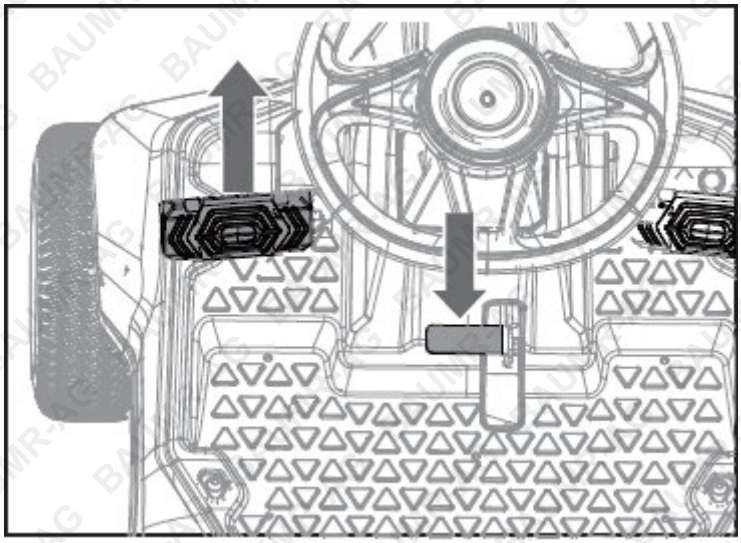

1. Fully depress and hold the brake pedal.
2. Press the parking brake pedal at the same time.
3. Release the brake pedal.
4. Release the parking brake pedal.
5. Switch off the mower and remove the ignition key.

Releasing the Parking Brake

1. Fully depress the brake pedal.
2. When you hear a click or feel the parking brake release, gradually release the brake pedal.

NOTE: The mower is fitted with a seat safety switch. If the operator leaves the seat while the engine is running and the required safety conditions are not met, the engine will shut down.

Setting the Cutting Deck Height

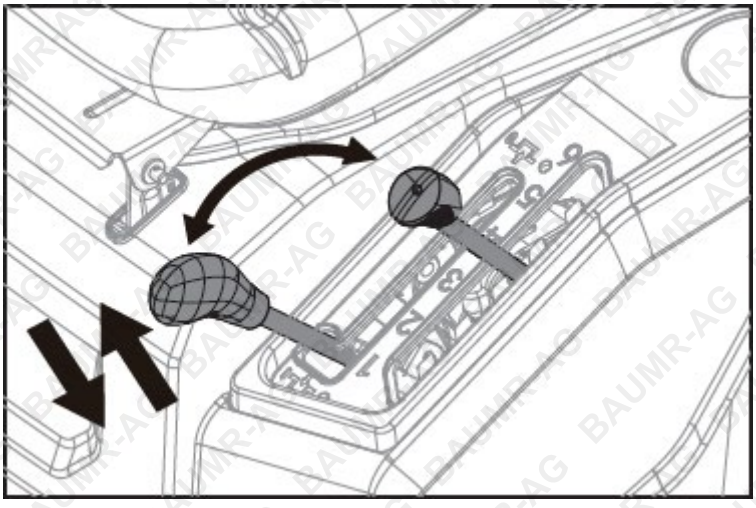

Before operating the mower, adjust the cutting deck to the most suitable height for your lawn.

1. Stop the mower and disengage the cutting blades.

2. Turn the ignition key to STOP and engage the parking brake.
3. To raise the cutting deck:
   a. Hold the cutting height adjustment lever.
   b. Move the lever to the right to disengage it from the slot.
   c. Move it towards the rear of the mower.
   d. Push it left into the desired slot to lock it in position.
4. To lower the cutting deck:
   a. Hold the cutting height adjustment lever.
   b. Move the lever to the right to disengage it from the slot.
   c. Move it towards the front of the mower.
   d. Push it left into the desired slot to lock it in position.

NOTE: Hold the cutting height adjustment lever firmly while adjusting the deck. Release the lever only when it is securely engaged in a slot. Releasing it suddenly may cause the lever to move unexpectedly and may result in injury.

Operation

WARNING: Ensure the mower is fully assembled and all safety devices are correctly fitted before operation.

Starting the Engine with the Electric Starter

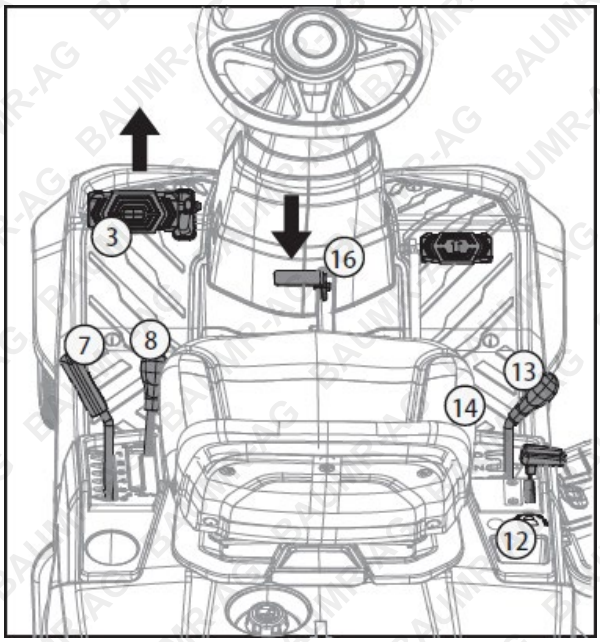

1. Check the engine oil level.
2. Ensure the grass catcher (9) is correctly fitted.
3. Fully depress the brake pedal (3) and engage the parking brake (16).
4. Ensure the cutter clutch (8) is disengaged.
5. Set the desired cutting height using the cutting height adjustment lever (7).
6. Set the forward/reverse gear lever (13) to N (Neutral).
7. Turn the ignition key (12) to START until the engine starts, then release it to the ON position.
8. Use the throttle lever (14) to adjust the engine speed.

Note: The electric start is powered by an internal lead-acid battery. The battery is charged while you operate the mower. In the case that the mower doesn't start via the key, move to the recoil starter process below.

Starting the Engine with the Recoil Starter

1. Check the engine oil level.
2. Ensure the grass catcher (9) is correctly fitted.
3. Fully depress the brake pedal (3) and engage the parking brake (16).
4. Ensure the cutter clutch (8) is disengaged.
5. Set the desired cutting height using the cutting height adjustment lever (7).
6. Set the throttle lever (13) to the neutral or starting position, as applicable.
7. Turn the ignition key (12) to ON.
8. Fold the seat forwards and open the access cover.
9. Pull the recoil starter handle firmly to start the engine.
10. If the engine is cold, several pulls may be required.
11. Do not allow the starter cord to snap back. Guide it back slowly.
12. Close the access cover and return the seat to its operating position before driving the mower.

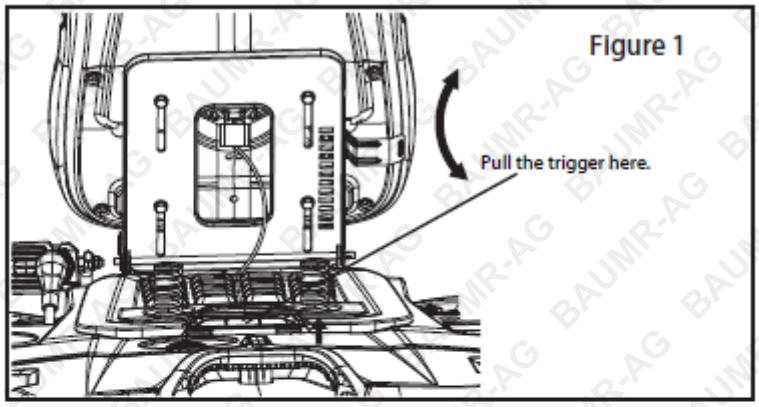

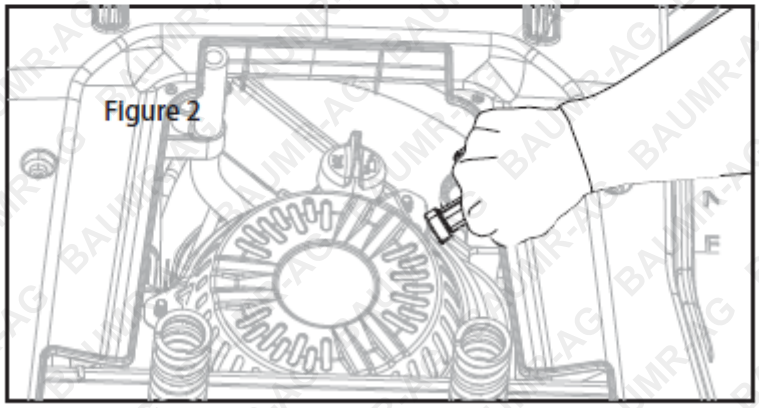

Driving Without Mowing

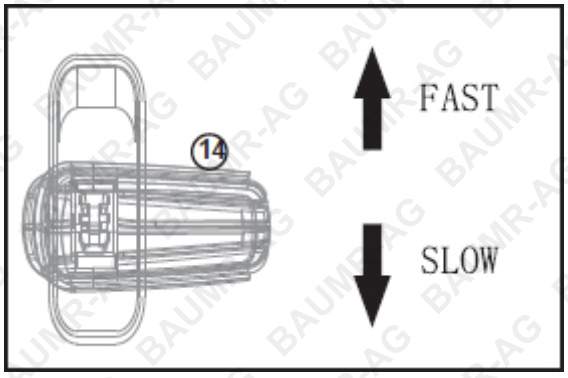

1. Fully depress the brake pedal (3). The parking brake (16) will release.
2. Move the throttle lever (14) towards FAST to increase engine speed.
3. Select the required direction of travel.
4. Press the forward/reverse pedal (25):
   - Press the forward pedal to move forwards.
   - Press the reverse pedal to move backwards.

WARNING: Do not press the accelerator/drive pedal while starting the mower, as this may damage the drive system.

NOTICE: Change direction only when the mower has come to a complete stop.

Driving and Mowing

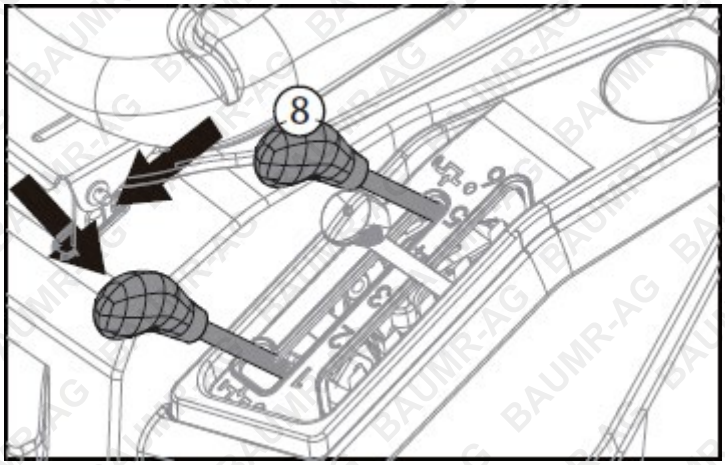

1. Fully depress the brake pedal (3) to release the parking brake (16).
2. Move the throttle lever (14) towards FAST to increase engine speed.
3. Move the cutter clutch lever (8) forwards, then move it to the left until it engages.
4. Select the required direction using the forward/reverse gear lever (13):
   - Set the lever to Forward to move forwards.
   - Set the lever to Reverse to move backwards.
5. Press the accelerator pedal (25) gradually to begin moving.

CAUTION: Change direction only when the mower has come to a complete stop. Do not press the accelerator pedal while the brake pedal is depressed, as this may cause the engine to stall or damage the drive system.

Stopping the Mower

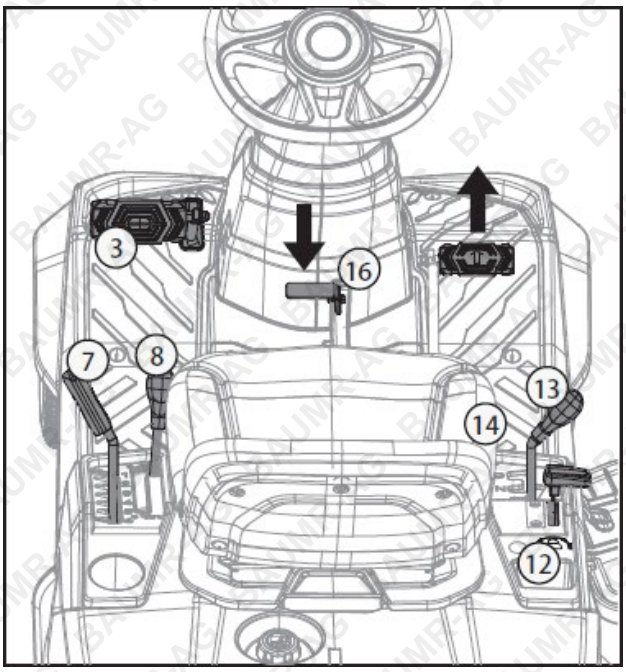

1. Fully depress the brake pedal (3) and engage the parking brake (16).

© Baumr-AG

2. Disengage the cutter clutch (8) by moving the lever to the right and then backwards.
3. Move the throttle lever (14) to SLOW.
4. Turn the ignition key (12) to STOP.
5. Set the desired cutting height using the cutting height adjustment lever (7), if required.
6. Always remove the ignition key when leaving the mower unattended.

Tips for Proper Mowing

Working on Slopes

Slopes are a major cause of loss-of-control and rollover accidents, which can result in serious injury or death.

There is no completely safe slope. Operating a ride-on mower on sloping ground requires extra care.

- Do not operate the mower on slopes steeper than 10° (17.6%).

- A 10° slope corresponds to a rise of approximately 17.6 cm over a horizontal distance of 1 m.
- Avoid starting or stopping on a slope.
- Do not operate where the mower could tip or slide, such as near ditches, embankments or soft ground.
- The risk of slipping or tipping increases on soft or wet ground.
- Drive up and down slopes, not across them.
- Avoid sudden changes in speed or direction.
- Avoid turning on slopes where possible. If turning is unavoidable, turn slowly using a wide arc.
- Do not mow wet grass on slopes, as reduced tyre grip may cause the mower to slide.
- Do not disengage the transmission or use the bypass/freewheel function while travelling on a slope.
- Take extra care when using attachments, as they may alter the mower's weight distribution.
- If the wheels begin to slip or the mower becomes stuck while travelling uphill, disengage the cutting blades and any attachments, then slowly reverse or drive straight downhill.
- Never try to stabilise the mower by placing your foot on the ground.
- A full grass catcher increases the risk of tipping.
- Never empty or raise the grass catcher while on a slope.

Stopping and Parking

- Park the mower only on a firm, level surface.
- Ensure the mower has come to a complete stop before leaving the seat.
- Remember that the cutting blades may continue rotating for several seconds after disengagement.

Before leaving the operator's seat:

1. Disengage the cutting blades and any attachments.
2. Lower the cutting deck and attachments.
3. Set all controls to the neutral position.

4. Engage the parking brake.
5. Stop the engine.
6. Remove the ignition key.

Keep the ignition key in a secure place where only authorised persons can access it.

General Mowing Tips

- Avoid running into or over objects that could damage the mower or cause injury.
- Do not touch the engine, exhaust or transmission while hot. Allow these components to cool before contact.
- Do not mow in poor visibility or inadequate lighting.
- If the mower strikes a foreign object or begins to vibrate abnormally, stop the engine and inspect the mower, blade and related components for damage.
- Do not carry out adjustments or repairs while the engine is running. Stop the engine, remove the ignition key and disconnect the spark plug lead before servicing.
- Take extra care when mowing near roads. Direct discharged grass and debris away from traffic.
- Avoid areas where tyre grip is poor or operation is otherwise unsafe.
- Before reversing, check carefully behind the mower, especially for children.
- When mowing thick or long grass, select a higher cutting position and reduce travel speed.
- Before clearing grass or blockages, stop the engine, remove the ignition key and disconnect the spark plug lead.
- Never remove or disable safety devices.
- Never add petrol while the engine is running or hot.

Mowing

Use only a sharp blade in good condition. A blunt or damaged blade may tear the grass and cause the lawn to yellow.

For best results:

- Mow in straight, overlapping passes.
- Overlap each pass slightly to avoid uncut strips.
- Keep the underside of the cutting deck clean and free from grass build-up.
- Select the cutting height according to the grass length.
- If the grass is very long, mow in several passes rather than removing more than approximately 4 cm in a single pass.
- Reduce speed when mowing long, thick or dense grass.

Important: For slope mowing, follow the instructions in Working on Slopes above and travel up and down the slope, not across it.

Blade Safety

Switch off the engine before inspecting or servicing the cutting blade.

WARNING: The blade may continue rotating for several seconds after the engine has been switched off.

- Never attempt to stop the blade by hand.
- Regularly check that the blade is securely fitted, in good condition and sharp.
- If the blade strikes an object, stop the mower immediately and wait until the blade has come to a complete stop.
- Inspect the blade and blade mounting. Replace any damaged components before further use.

Emptying the Grass Catcher While Seated



1. Drive to the location where you want to empty the grass catcher (9).
2. Fully depress the brake pedal (3).
3. Disengage the cutter clutch (8).
4. Lift the grass catcher (9) using the handle until the contents are discharged.
5. Lower the grass catcher (9) completely before continuing operation.

Removing the Grass Catcher for Emptying

1. Fully depress the brake pedal (3) and engage the parking brake (16).
2. Disengage the cutter clutch (8).
3. Move the throttle lever (14) to SLOW.
4. Remove or disengage the grass catcher (9) and empty it.
5. Refit and securely engage the grass catcher (9) before continuing operation.

© Baumr-AG

After Mowing

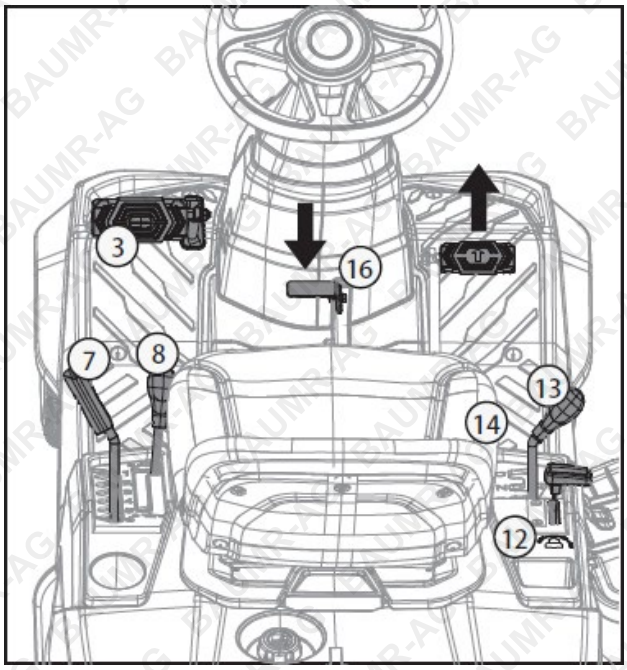

- Allow the engine to cool before storing the mower in an enclosed area.
- Remove grass, leaves, grease and oil before storage.
- Do not store objects on top of the mower.
- Check all nuts, bolts and screws before the next use. Tighten any loose fasteners.
- Empty the grass catcher (9).
- Remove the ignition key.
- Store the mower away from flames, sparks and other ignition sources. Petrol vapors may ignite or explode.
- Use only original replacement parts or parts approved by the manufacturer.
- Before long-term storage, drain the petrol tank using a suitable fuel transfer pump.
- Clean, lubricate and service the mower as required.

Reverse Mowing Function

WARNING: Mowing in reverse increases the risk of injury. Use reverse mowing only when necessary and always check the area behind the mower before reversing.

To activate reverse mowing mode:

1. Stop the mower and ensure the cutting blades are not rotating.
2. Engage the parking brake.
3. Turn the ignition key (12) to the RSO position.
4. Check carefully behind the mower before reversing.
5. Reverse slowly and remain alert to people, animals and obstacles.

NOTICE: If the ignition key is not set to the RSO position, the mower will not mow while travelling in reverse.

Mode 1: Rear Grass Collection Mode

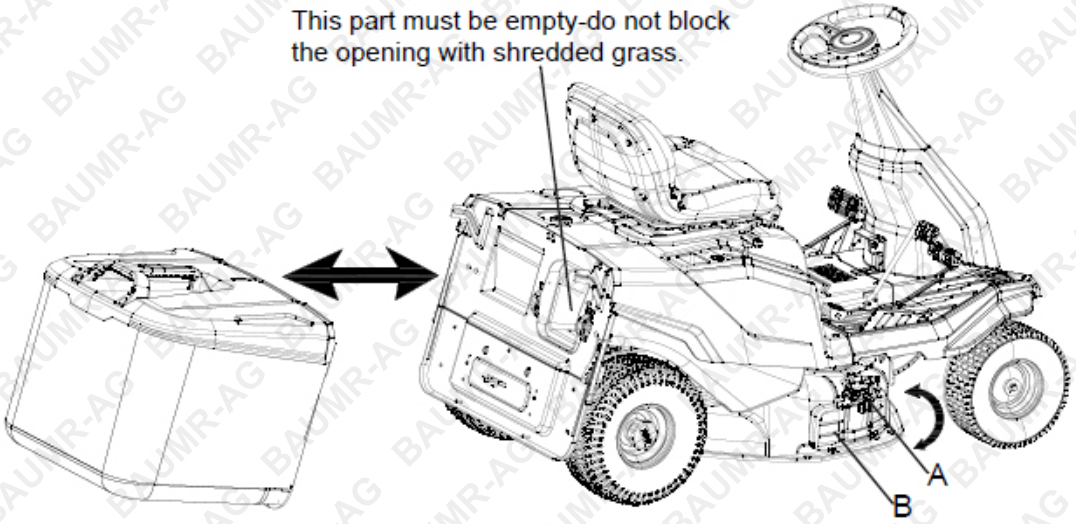

A:Limit Switch Plate
B:Air Duct Baffle
Both A and B can rotate vertically (up/down); please invert A and B to the positions shown in the figure above.
Note: When using this mode, please ensure the grass catcher is properly installed.

Mode 2: Mulching Mode

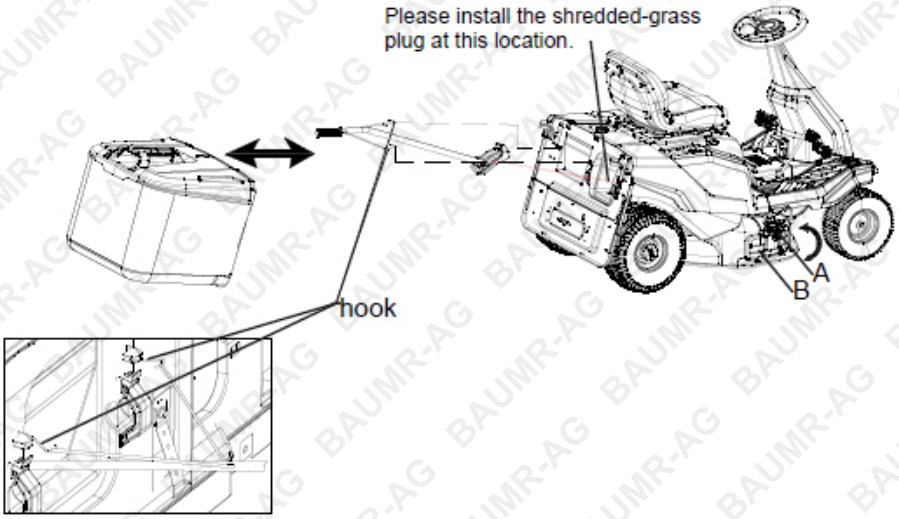

A:Limit Switch Plate
B:Air Duct Baffle
Both A and B can rotate vertically (up/down); please invert A and B to the positions shown in the figure above.
The hook on the plug rod must be installed at the position indicated in the diagram.
Note: When using this mode, please ensure the grass catcher is properly installed.

© Baumr-AG

Mode 3: Side-Discharge Mode

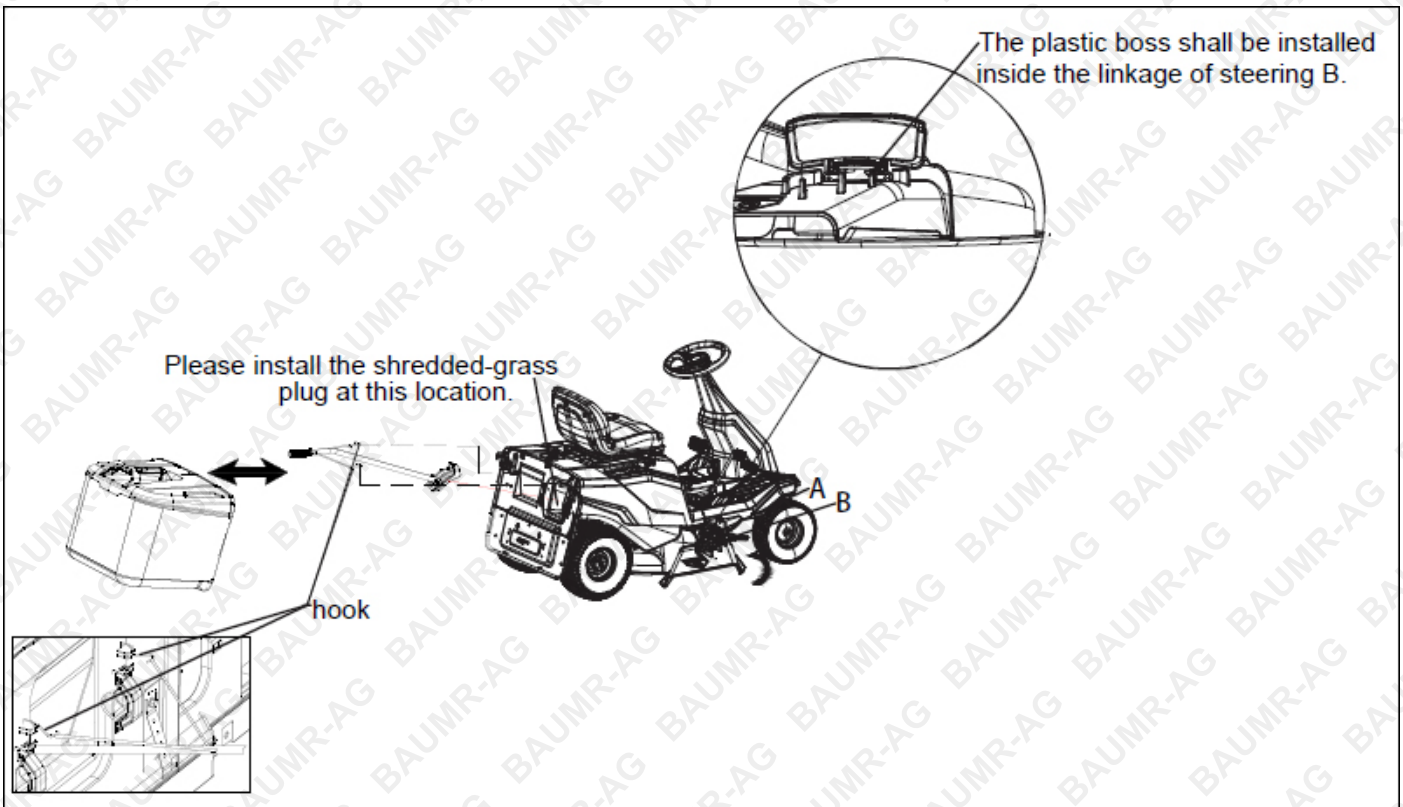

A:Limit Switch Plate
B:Air Duct Baffle
C:Side-Discharge Duct
Both A and B can rotate vertically (up/down); please invert A and B to the positions shown in the figure above.
The hook on the plug rod must be installed at the position indicated in the diagram.
Note: When using this mode, please ensure the grass catcher is properly installed.

Lead-Acid Battery Care and Maintenance

Top 3 Battery Care Requirements

1. **Charge battery before first use**. The battery may arrive with some charge, regardless of this the battery must be charged on the initial charge and for each subsequent charge.
2. **Charge battery immediately when it is depleted.** Do not store a depleted battery. This will permanently impact the life of the battery. If the battery is going to be stored for a period of time, fully charge the battery before storing.
3. **Disconnect battery when not in use (if applicable)**. To prolong the life of a battery, disconnect it from the unit when not in use. Disconnect chargers from the battery once charged.

To ensure the battery maintains optimum performance, follow the guidelines outlined below.

- For best results, charge batteries in temperatures between 10°C and 30°C
- When battery is charged, disconnect the charger from the power supply and remove the battery from the charger.
- Inspect the terminals, screws, clamps and cables for breakage, damage, or loose connections. These should be clean, tight, and free of corrosion.
- Use only with the battery charger specified by the manufacturer.
- Ensure that the battery charger electrical cord is not subjected to damage or stress. Do not operate the battery charger if it has a damaged electrical cord or plug.
- Do not use the charger in wet areas or expose it to rain or water.
- Keep the battery clean, dry, free of dirt and grime. A dirty battery can discharge across the grime on top of the battery casing.
- Apply a thin coating of high temperature grease to posts and cable connections for added protection.
- Inspect the battery case for obvious signs of physical damage or warpage. This usually indicates the battery has been overheated or has been overcharged.
- Batteries can explode in the presence of an ignition source, such as a pilot light. To reduce the risk of serious personal injury, never use any cordless product in the presence of open flame. Exploding batteries can propel debris and chemicals.
- Do not open the battery – danger of short-circuiting and/or explosion.
- Do not attempt to destroy or disassemble the battery pack or remove any of its components.
- Do not touch the battery terminals with metal objects and/or body parts as short-circuit and/or personal injury may result.
- Explosion hazard – protect the battery against heat, for example, direct sunlight and fire. Do not store batteries in vehicles or locations subject to heat.
- Explosion hazard – do not open and/or short-circuit the battery.
- Poison hazard – battery leakage (liquid ejection). Under extreme conditions, liquid may be ejected from the battery – avoid contact. If contact accidentally occurs, immediately seek medical attention, and flush with water. If liquid contacts eyes, immediately seek medical attention, flush with clean water for at least 10 minutes. Liquid ejected from the battery may cause irritation or burns.
- Dispose of non-serviceable batteries in an environmentally responsible manner and according to local regulations.

Failure to adhere to the requirements above may result in the battery becoming inoperative or battery life being reduced. In extreme cases or abuse, battery overheating, or fire may result.

Maintenance and Cleaning

ATTENTION: Surface corrosion will occur on metal surfaces over time and the rate of oxidation depends on factors such as proximity to the ocean and humidity or condensation of water vapour on metal surfaces. To mitigate this, WD40 can be used to remove surface corrosion then, when applied periodically, it will prevent rust from forming.

Maintenance and Repairs

Before cleaning, adjusting, repairing or maintaining the mower:

- Park the mower on firm, level ground.
- Engage the parking brake.
- Stop the engine.
- Allow all moving parts to come to a complete stop.
- Remove the ignition key.

Allow the mower to cool before working on or around the engine, exhaust manifold or muffler. These components can become extremely hot during operation.

WARNING: Burn hazard. Avoid direct contact with engine oil. Clean up any spilled oil immediately.

Cleaning

Clean the mower and attachments after each use. Grass and other debris should be removed regularly, as moisture may cause corrosion or damage.

Cleaning with Water

1. Park the mower in a suitable outdoor area.
2. Connect a hose to the mower's wash port.
3. Start the mower and allow the cutting blades to operate for approximately 30 seconds.
4. Allow the rotating blades to distribute the water beneath the cutting deck and clean the underside.
5. Stop the mower.
6. Turn off the water supply and disconnect the hose.
7. Wipe the mower clean with a cloth.

NOTE: Do not allow dried grass to build up beneath the cutting deck. Remove grass and debris regularly.

- Never clean the mower with a high-pressure cleaner or pressure washer.
- Do not use aggressive cleaning agents, solvents, degreasers or petrol.
- Do not drive close to edges, ditches or embankments for the purpose of cleaning the mower.
- To reduce the risk of fire, keep the following areas free from grass, leaves, oil and grease:
  - Engine
  - Cooling fins

© Baumr-AG

  - Battery compartment
  - Fuel tank and surrounding area
  - Exhaust system
- Always clean the grass catcher after use.

Maintenance

- Only carry out maintenance procedures described in this manual. Other maintenance and repairs should be performed by a qualified service technician.
- Have the mower and attachments inspected periodically by a qualified service technician.
- Keep all warning and information labels clean and legible. Replace damaged or missing labels.
- For safety:
  - Regularly inspect fuel system components, including the fuel line, fuel tank, fuel cap and connections.
  - Replace damaged, worn or leaking components immediately.
  - Do not remove, modify or bypass safety devices.
  - Repairs to safety devices must only be carried out by a qualified technician.
  - Ensure all nuts, bolts, pins and screws are securely tightened.
  - Pay particular attention to blade mounting hardware.
  - Check the grass catcher, discharge chute and other collection components regularly for wear or damage.
  - Replace worn or damaged parts immediately.

Tyres and Wheels

- Check tyre pressures regularly and ensure they are set to the specified values.
- Inspect the tyres and wheels for damage or excessive wear.
- Check that the front and rear wheels are securely fastened.
- Lightly grease the wheel axles and wheel hubs once per season.

Brakes

- Check the brake system regularly.
- If the brakes do not operate correctly, have them inspected and repaired by a qualified service technician before further use.

Cutting Blade

- Wear suitable protective gloves when handling the cutting blade.
- Check the blade regularly for:
  - Wear
  - Damage
  - Cracks

© Baumr-AG

  - Distortion
  - Secure mounting
- Have the blade sharpened and balanced by a qualified service technician when necessary.
- If performance becomes poor, the blade should be sharpened or replaced.

Replacing the Blade

When replacing the cutting blade:

- Use only replacement blades approved by the manufacturer.
- Wear protective gloves.
- Never install a damaged or bent blade.

WARNING: Never work on or touch ignition components while the engine is running.

Before carrying out maintenance or repairs:

1. Stop the engine.
2. Remove the ignition key.
3. Disconnect the spark plug lead from the spark plug.
4. Allow all moving parts to stop completely.

Replacing the Cutting Blade

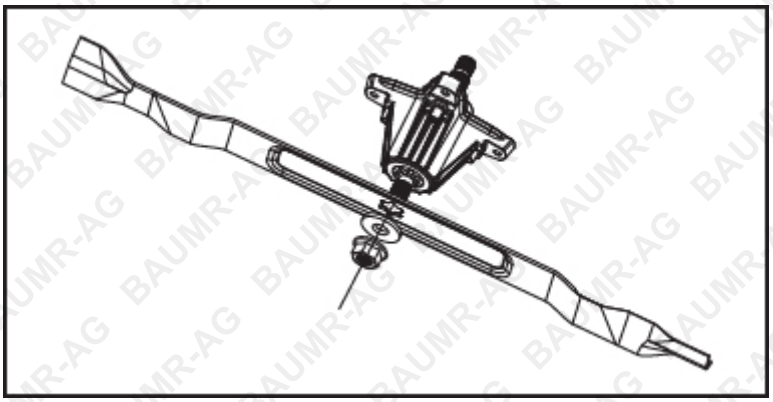

1. Remove the ignition key.
2. Remove the blade retaining nut.
3. Replace the cutting blade as shown in the diagram.
4. Refit the washer and nut.
5. Tighten the blade retaining nut to 65 N·m.

NOTE: Replace the nut and washer if they are worn or damaged.

Checking the Engine Oil Level

CAUTION: Never operate the engine with insufficient or no engine oil. This may cause severe engine damage.

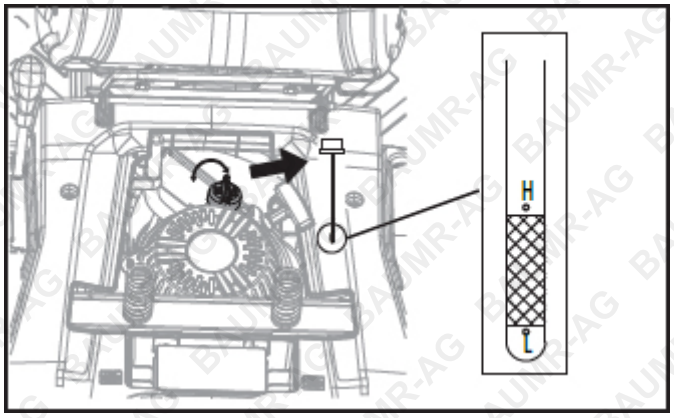

Use **SAE 30 engine oil.**

1. Park the mower on a firm, level surface.
2. Remove the ignition key (12).
3. Unscrew and remove the oil dipstick (20).
4. Wipe the dipstick clean.
5. Reinsert the dipstick fully.
6. Remove it again and check the oil level.
7. Ensure the oil level is between the L (low) and H (high) marks.
8. Add oil if necessary. Do not overfill.
9. Refit the dipstick securely.

Changing the Engine Oil

Change the engine oil annually before the start of the mowing season, or more frequently if required by operating conditions.

Use **SAE 30 engine oil.**

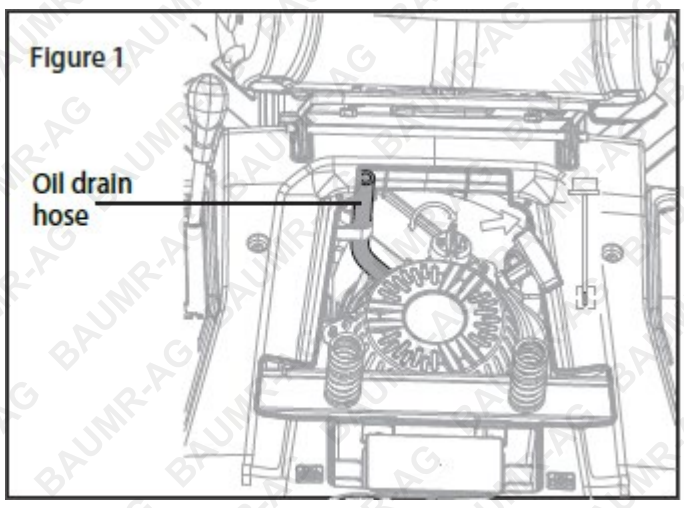

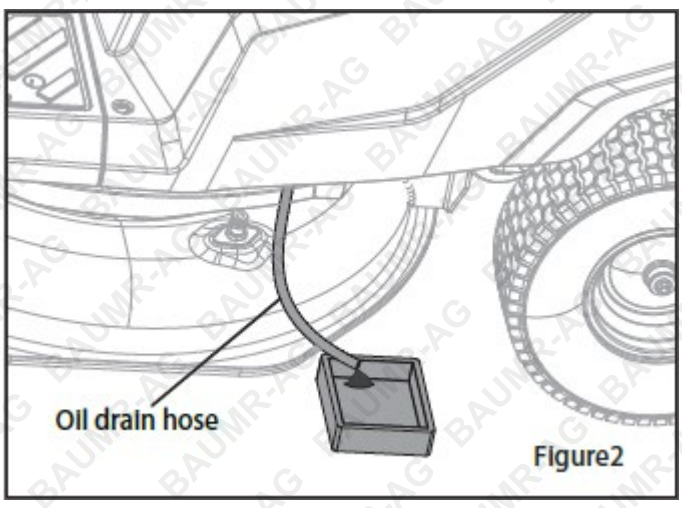

1. Park the mower on a firm, level surface.
2. Stop the engine and allow it to cool.
3. Remove the ignition key.
4. Clean the area around the oil dipstick.
5. Unscrew and remove the oil dipstick.
6. Remove the oil drain hose from its retaining position, as shown in Figure 1.
7. Place a suitable oil drain pan beneath the hose outlet.
8. Drain the oil completely.
9. Return the oil drain hose to its original position.
10. Refill the engine with the specified oil.
11. Check the oil level using the dipstick.
12. Refit and hand-tighten the dipstick.
13. Wipe away any spilled oil.

Dispose of used engine oil in accordance with local regulations.

Air Filter Maintenance

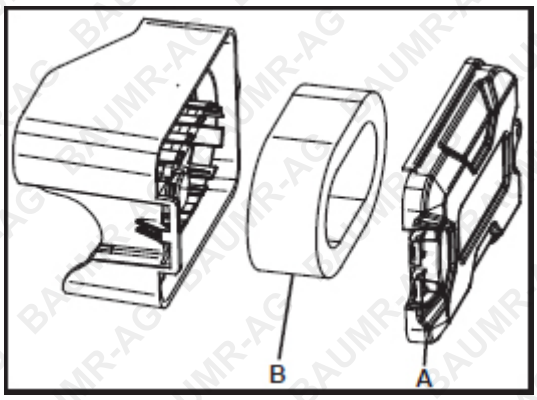

A dirty air filter can reduce engine performance by restricting airflow to the carburettor. Inspect and clean the air filter regularly.

Check the air filter every 50 operating hours, or more frequently in dusty conditions.

1. Fold the seat forwards.
2. Open the air filter cover (A).
3. Remove the air filter element (B).
4. Clean the filter using compressed air or by gently tapping it to remove dirt and dust.
5. Replace the filter if it is excessively dirty or damaged.
6. Refit the filter element and cover securely.

IMPORTANT: Never clean the air filter with petrol or other flammable solvents.

Spark Plug Maintenance

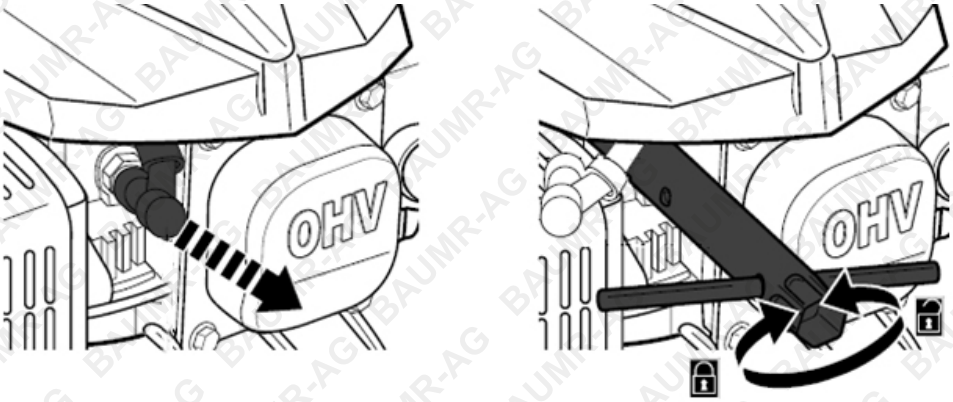

Inspect the spark plug after every 10 operating hours and clean it using a copper wire brush if necessary.

Replace the spark plug after every 50 operating hours, or sooner if worn or damaged.

1. Disconnect the spark plug lead.
2. Remove the spark plug using a spark plug wrench.
3. Inspect and clean the spark plug.
4. Check the electrode gap using a feeler gauge.
5. Adjust the gap to 0.75 mm if necessary.
6. Refit and tighten the spark plug.
7. Reconnect the spark plug lead.

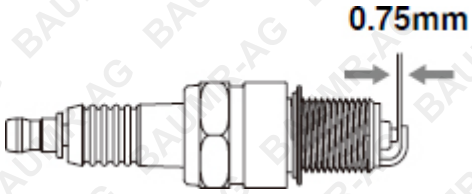

WARNING: Stop the engine and allow it to cool for at least 30 minutes before removing the spark plug. The engine and spark plug may be hot enough to cause burns.

Replacing the Fuse

The electric starter is protected by a 10 A fuse.

1. Stop the engine and remove the ignition key.
2. Locate the fuse at the rear of the mower, as shown in the diagram.
3. Remove the faulty fuse.
4. Replace it with a new 10 A fuse of the same type and rating.

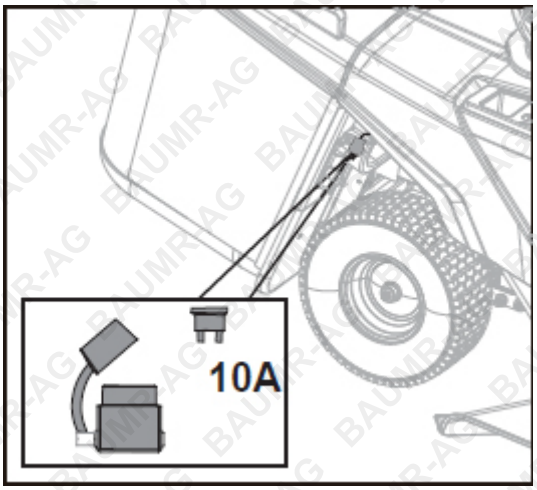

IMPORTANT: Never use a fuse with a higher rating or bypass the fuse.

Battery and Charger

- Regularly inspect the battery terminals and electrical connections for corrosion or damage.
- Keep the battery and terminals clean and dry.
- Clean corrosion using a suitable brush or compressed air.
- Do not store the battery for extended periods in temperatures above approximately 50°C, as this may permanently damage the battery.

© Baumr-AG

- After extended storage, recharge the battery before use if required.

Tyre Pressure

- Check the tyre pressures before each use.
- Recommended cold tyre pressures:
  - **Front tyres**: 1.5 bar
  - **Rear tyres**: 1.8 bar

IMPORTANT: Incorrect tyre pressure can affect handling and may damage the tyres, rims or valves.

Repairs

After maintenance or repairs:

- Ensure all guards, covers and safety devices are correctly fitted and functioning.
- Keep parts that may cause injury out of reach of children and unauthorised persons.
- Use only replacement parts approved by the manufacturer.
- Repairs should be performed by a qualified service technician where required.

The manufacturer is not responsible for damage caused by improper repairs or the use of unsuitable replacement parts or accessories.

Service Information

The following components are subject to normal wear and may require periodic replacement:

- Spark plug
- Air filter
- Fuel filter
- Cutting blade
- Drive belt
- Battery
- Tyres

Wear parts may not necessarily be included with the mower.

Storage and Transport

Store the mower and its accessories in a dark, dry, frost-free place out of reach of children. The recommended storage temperature is 5–30°C.

Keep this manual with the mower.

- Never store the mower with petrol in the tank inside a building where fuel vapours could reach a naked flame or spark.
- Allow the engine to cool completely before storage.
- To reduce the risk of fire, keep the engine, exhaust, battery compartment and fuel tank area free from grass, leaves, oil and grease.

Preparing the Mower for Long-Term Storage

CAUTION: Do not drain petrol in enclosed areas, near naked flames or while smoking. Petrol vapours can ignite or explode.

1. Drain the fuel tank using a suitable fuel transfer pump.
2. Start the engine and allow it to run until the remaining petrol is used and the engine stops.
3. Fold the seat forwards and open the access panel to reach the battery.
4. Change the engine oil.
5. Remove the spark plug.
6. Add approximately 20 mL of engine oil into the cylinder.
7. Slowly pull the recoil starter several times to distribute the oil inside the cylinder.
8. Refit the spark plug.
9. Clean the cylinder cooling fins and engine housing.
10. Thoroughly clean the mower to protect painted surfaces.
11. Store the mower in a well-ventilated, dry location.

NOTE: Incorrect storage may damage the battery and may not be covered under warranty.

Transporting the Ride-On Mower

Due to its weight, the mower can cause serious injury during loading and unloading. Take particular care when transporting it.

- Do not tow the ride-on mower.
- Transport the mower on a suitable vehicle or trailer.
- Secure the mower firmly to prevent movement during transport.
- Engage the parking brake.
- Disengage the cutting blades and attachments before transport.
- Comply with applicable local requirements for load restraint and transport.
- After loading, allow the engine and exhaust system to cool completely.
- Keep the mower and surrounding loading area free from grass, leaves and other combustible materials.
- Always remove the ignition key during transport.

Disposal and Recycling

The mower is supplied in packaging to help protect it during transport. Packaging materials should be reused or recycled where possible.

The mower and its accessories contain materials such as metal, plastic and electrical components that should be disposed of responsibly.

- Do not dispose of electrical or electronic components with general household waste.
- Take electrical components, batteries and rechargeable batteries to an appropriate recycling facility or collection point.
- Contact your local council or recycling facility for information about disposal options in your area.
- Dispose of oils, fuels and other hazardous materials in accordance with local regulations.
- Remove batteries from the mower before disposal where practical.

Battery Disposal

- Batteries and rechargeable batteries must not be disposed of with household waste.
- Take used batteries to an approved battery recycling or collection facility.
- Some batteries may contain hazardous substances and must be handled in accordance with local disposal requirements.

© Baumr-AG

Troubleshooting

The table below lists common problems, possible causes and recommended corrective actions.

CAUTION: Before inspecting, adjusting or repairing the mower, stop the engine, remove the ignition key and disconnect the spark plug lead.

CAUTION: After making adjustments or repairs, allow the engine and exhaust components to cool before touching them.

Fault	Possible cause	Remedy
Excessive noise or vibration during operation	Loose screws or fasteners	Check and tighten all fasteners
	Loose blade fasteners	Check and tighten blade fasteners
	Blade is unbalanced	Balance or replace the blade
	V-belt is damaged	Replace the V-belt
	Discharge chute is blocked	Clean the discharge chute
Engine does not start	Incorrect starting procedure	Follow the correct starting procedure
	Brake pedal not fully depressed	Fully depress the brake pedal
	Drive control not in neutral	Set the drive control to neutral
	Spark plug is faulty or fouled	Clean or replace the spark plug
	Fuel tank is empty	Add fresh petrol
	Fuel lines are blocked	Inspect and clean the fuel system
	Old or contaminated petrol	Drain the fuel system and refill with fresh petrol
	Spark plug gap incorrect	Set the spark plug gap to 0.75 mm
	Spark plug is wet with petrol	Dry the spark plug and refit it
	Engine fault	Contact a qualified service technician
Engine overheats	Cooling fins are dirty	Clean the cooling fins
	Engine oil level is low	Check the oil level and top up if necessary
	V-belt is worn	Replace the V-belt
Mower does not drive	Bypass/freewheel valve is disengaged	Set the bypass valve to the driving position
	Drive belt is detached	Refit the drive belt
	Drive belt is worn or damaged	Replace the drive belt
	Rear axle drive key is missing	Have the drive key replaced
Engine runs unevenly	Air filter is dirty	Clean or replace the air filter
	Spark plug is dirty	Clean the spark plug
Poor cut or lawn turns yellow after mowing	Blade is blunt	Sharpen or replace the blade
	Cutting height is too low	Raise the cutting height

© Baumr-AG

Fault	Possible cause	Remedy
Poor grass discharge or clippings are not collected	Cutting height is too low	Raise the cutting height
	Blade is worn	Replace the blade
	Grass catcher is blocked	Empty and clean the grass catcher
	Discharge chute is blocked	Clean the discharge chute
	Grass is too wet	Allow the grass to dry before mowing
	Travel speed is too high	Reduce travel speed
Electric starter does not operate	Battery is discharged	Charge or replace the battery
	Fuse has blown	Replace the fuse with one of the specified rating
Engine power drops while mowing	Travel speed is too high for the cutting height or grass conditions	Reduce travel speed and/or raise the cutting height
Braking performance is poor	Brake system is incorrectly adjusted or worn	Have the brake system inspected by a qualified service technician

Specifications

Engine Type	Ducar DV225
Engine Displacement	224 cc
Power	6 HP
Transmission	CVT
Maximum Speed	6.5 km/h forward; 3.5 km/h reverse
Fuel Type	Regular Unleaded, 95+ RON
Fuel Tank Capacity	4.0 L
Starting System	Electric Start
Battery Type	12 V Lead-Acid Starting Battery
Cutting Width	660 mm
Cutting Height	35–75 mm
Height Adjustment	6 positions
Rear Wheels	13 × 5.00-6
Front Wheels	10 × 4.00-4
Noise Level	<98 dB

© Baumr-AG

Some experts believe that the incorrect or prolonged use of almost any product may cause serious injury or death. To help reduce your risk of serious injury or death, refer to the information below. For more information, see www.datastreamserver.com/safety

- Consult all documentation, packaging, and product labelling before use. Note that some products feature documentation available online. It is recommended to print and retain the documentation.
- Before each use, check the product for loose/broken/damaged/missing parts, wear, or leaks (if applicable). Never use a product with loose/broken/damaged/missing parts, wear, or leaks.
- Products must be inspected and serviced (if applicable) by a qualified technician every 6 months. This is based on average residential use by persons of average size and strength, and on a property of average metropolitan size. Use beyond these recommendations may require more frequent inspections/servicing.
- Ensure that all users of the product have completed a suitable industry recognised training course before being allowed access to the product.
- The product has been supplied by a general merchandise retailer that may not be familiar with your specific application or description of application. Be sure to attain third-party approval from a qualified specialist for your application before use, regardless of any assurances from the retailer or its representatives.
- This product is not intended for use where fail-safe operation is required. As with any product (for example, automobile, computer, toaster), there is the possibility of technical issues that may require the repair or replacement of parts, or the product itself. If the possibility of such failure and the associated time it may take to rectify could in any way inconvenience the user, business, or employee, or financially affect the user, business, or employee, then the product is not suitable for your requirements. This product is not intended for use where incorrect operation or a failure of any kind, including but not limited to, a condition requiring product return, replacement, parts replacement, or service by a technician may cause financial loss, loss of employee time or an inconvenience requiring compensation.
- If this product has been purchased in error when considering the information presented here, contact the retailer directly for details of their returns policy, if required.

edisons.com.au

© Baumr-AG. All rights reserved. No part of this document, including descriptive content, concepts, ideas, diagrams, or images may be reproduced or transmitted in any form or by any means, electronic or mechanical, including photocopying, scanning, or recording, or any information storage and retrieval system, without express permission or consent from the publisher.