HONDA

Owner's Manual

GENERATOR
EB10000

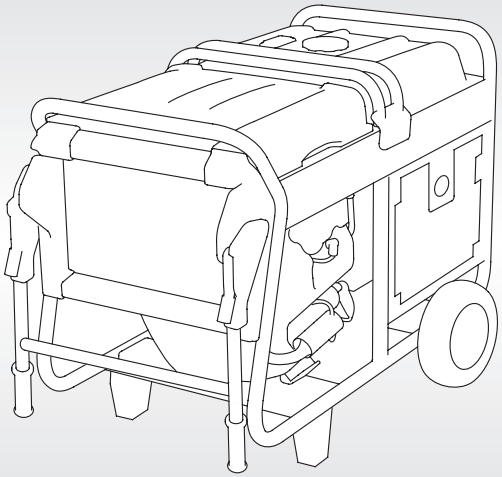

See page 12 for instructions on assembling your generator.
See page 17 for Initial Use Instructions.

ⓒ 2024 Honda Motor Co., Ltd. -All Rights Reserved

⚠ WARNING: ⚠

The engine exhaust from this product contains chemicals known to the State of California to cause cancer, birth defects or other reproductive harm.

⚠ WARNING

Exhaust contains poisonous carbon monoxide gas that can build up to dangerous levels in enclosed or partly enclosed areas.

Breathing carbon monoxide can cause unconsciousness or death.

Never run this product's engine in an enclosed, or even partly enclosed area.

Keep this owner's manual handy so that you can refer to it any time.
This owner's manual is considered a permanent part of the generator and should remain with the generator if resold.

The information and specifications included in this publication were in effect at the time of approval for printing. Honda Motor Co., Ltd. reserves the right, however, to discontinue or change specifications or design at any time without notice and without incurring any obligation whatsoever.

The illustration may vary according to the type.

INTRODUCTION

Thank you for purchasing a Honda generator.

We would like to help you get the best results from your new generator and to operate it safely. This manual contains the information on how to do that; please read it carefully.

We suggest you read the "Distributor's Limited Warranty" (see page 102) to fully understand its coverage and your responsibilities of ownership.

When your generator needs scheduled maintenance, keep in mind that your Honda servicing dealer is specially trained in servicing Honda generators and is supported by the parts and service divisions of American Honda. Your Honda servicing dealer is dedicated to your satisfaction and will be pleased to answer your questions and concerns.

INTRODUCTION

A FEW WORDS ABOUT SAFETY

Your safety and the safety of others are very important.

We have provided important safety messages in this manual and on the generator. This information alerts you to potential hazards that could hurt you or others. Please read these messages carefully.

Of course, it is not practical or possible to warn you about all the hazards associated with operating or maintaining a generator. You must use your own good judgment.

You will find important safety information in a variety of forms:

- **Safety Labels** — on the generator.
- **Instructions** — how to use this generator correctly and safely.
- **Safety Headings** — such as *IMPORTANT SAFETY INFORMATION*.
- **Safety Messages** — preceded by a safety alert symbol ⚠ and one of three signal words, DANGER, WARNING, or CAUTION.

  These signal words mean:

⚠ DANGER You WILL be KILLED or SERIOUSLY HURT if you do not follow instructions.

⚠ WARNING You CAN be KILLED or SERIOUSLY HURT if you do not follow instructions.

⚠ CAUTION You CAN be HURT if you do not follow instructions.

This entire book is filled with important safety information - please read it carefully.

DAMAGE PREVENTION MESSAGES

In addition to the above, you will find information preceded by a NOTICE symbol. That information is intended to help you avoid damage to your generator, other property, or the environment.

CONTENTS

INTRODUCTION 1

GENERATOR SAFETY 7
IMPORTANT SAFETY INFORMATION 7
Operator Responsibility 7
Carbon Monoxide Hazards 8
Electric Shock Hazards 9
Fire and Burn Hazards 9
Refuel With Care 10
Vehicles and Transportation Hazards 10
SAFETY LABEL LOCATIONS 11

ASSEMBLY 12
SAFETY 12
The Importance of Proper Assembly 12
ASSEMBLY 13
Unpacking 13
Loose Parts 13
Handle Installation 14
Wheel Kit Installation 15
Hanger Kit Installation 16

INITIAL USE INSTRUCTIONS 17
ENGINE OIL 17
ENGINE OIL RECOMMENDATIONS 18
FUEL 19
FUEL RECOMMENDATIONS 21

CONTROLS & FEATURES 22
COMPONENT & CONTROL LOCATIONS 22
CONTROLS 24
Fuel Valve Lever 24
Engine Switch 24
Choke Knob 24
CO-MINDER (CO Shut-off System) 25
AC Circuit Protectors 27
AC Circuit Breaker 28
Ground Fault Circuit Interrupter (GFCI) 29
Auto Throttle® System 31
Folding Handle 32
FEATURES 33
Oil Alert® System 33
i-Monitor 34

CONTENTS

Ground Terminal 38
Fuel Gauge 39

BEFORE OPERATION 40
ARE YOU READY TO GET STARTED? 40
Knowledge 40
IS YOUR GENERATOR READY TO GO? 40
Check the Engine 41
Check the GFCI 41
Check the Battery 41
AC Appliance and Power Cord 42
ENGINE OIL LEVEL CHECK 43
AIR FILTER CHECK 44
SAFE OPERATING PRECAUTIONS 46

OPERATION 47
STARTING THE ENGINE 47
STOPPING THE ENGINE 51
HOW TO RESTART WHEN STOPPED BY CO-MINDER (CO SHUT-OFF SYSTEM) 52
GFCI OPERATION CHECK 53
GFCI System ①
(120V-30A, 120V/240V-30A, 120V/240V-37.5A Receptacles) 54
GFCI System ②
(120V-20A Duplex Receptacle) 56
AC OPERATION 59
AC Applications 60
AUTO THROTTLE® SYSTEM 61
STANDBY POWER 62
Connections to a Building's Electrical System 62
System Ground 62
Special Requirements 63

SERVICING YOUR GENERATOR 64
THE IMPORTANCE OF MAINTENANCE 64
MAINTENANCE SAFETY 65
Safety Precautions 65
MAINTENANCE SCHEDULE 66
ENGINE OIL CHANGE 67
AIR CLEANER SERVICE 68
Foam Air Filter Cleaning 68
SEDIMENT CUP CLEANING 69
SPARK PLUG SERVICE 71

SPARK ARRESTER SERVICE 73
BATTERY SERVICE 75
Emergency Procedures 75
Battery Inspection 77
Battery Removal 78
Battery Charging 79
Battery Installation 79
FUSE 80

STORAGE 81
STORAGE PREPARATION 81
Cleaning 81
Fuel 81
Engine Oil 85
Engine Cylinder 85
STORAGE PRECAUTIONS 86
REMOVAL FROM STORAGE 86

TRANSPORTING 87

TAKING CARE OF UNEXPECTED PROBLEMS 89
ENGINE WILL NOT START 89
ENGINE LACKS POWER 90
NO POWER AT THE AC RECEPTACLES 90
ENGINE AUTOMATICALLY STOP AND THE CO ALARM INDICATOR FLASHING 91
ENGINE AUTOMATICALLY STOP AND THE FAULT/CO SENSOR LIFE INDICATOR FLASHING 91
FAULT/CO SENSOR LIFE INDICATOR FLASHING WHEN RUNNING THE ENGINE 91

TECHNICAL INFORMATION 92
SERIAL NUMBER LOCATION 92
CARBURETOR MODIFICATION FOR HIGH ALTITUDE OPERATION 93
EMISSION CONTROL SYSTEM INFORMATION 94
Air Index 96
SPECIFICATIONS 97
WIRING DIAGRAM 99

CONSUMER INFORMATION 100
DEALER LOCATOR INFORMATION 100
Honda PUBLICATIONS 100
CUSTOMER SERVICE INFORMATION 101

CONTENTS

Distributor's Limited Warranty 102
Emission Control System Warranty 107
REGISTRATION 112

INDEX 113

QUICK REFERENCE INFORMATION ..... inside back cover

GENERATOR SAFETY

IMPORTANT SAFETY INFORMATION

Honda generators are designed for use with electrical equipment that has suitable power requirements. Other uses can result in injury to the operator or damage to the generator and other property.

Most injuries or property damage can be prevented if you follow all instructions in this manual and on the generator. The most common hazards are discussed below, along with the best way to protect yourself and others.

Operator Responsibility

- Never attempt to modify the generator. It can cause an accident as well as damage to the generator and appliances.
- Know how to stop the generator quickly in case of emergency.
- Understand the use of all generator controls, output receptacles, and connections.
- Be sure that anyone who operates the generator receives proper instruction.
- Protect children by keeping them at a safe distance from the generator.
- Obey all applicable laws and regulations where the generator is used.

GENERATOR SAFETY

Carbon Monoxide Hazards
A generator's exhaust contains toxic carbon monoxide, which you cannot see or smell. Breathing carbon monoxide can KILL YOU IN MINUTES. To avoid carbon monoxide poisoning, follow these instructions when operating a generator:

- Only run a generator OUTSIDE, far away from windows, doors, and vents with engine exhaust directed away from occupied structures.
- Never operate a generator inside a house, garage, basement, crawl space, any type of vehicle, trailer, or boat, or any enclosed or partly enclosed space.
- Never operate a generator near open doors, windows, vents, or hatches.
- Get fresh air and seek medical attention immediately if you suspect you have inhaled carbon monoxide.

Early symptoms of carbon monoxide exposure include headache, fatigue, shortness of breath, nausea, and dizziness. Continued exposure to carbon monoxide can cause loss of muscular coordination, loss of consciousness, and then death.

To alert you to potentially dangerous levels of carbon monoxide coming from a generator operating outside or from other sources, install battery operated carbon monoxide alarms or plug-in carbon monoxide alarms with battery back-up on every level of your home, outside sleeping areas, inside any type of vehicle, trailer, or boat in accordance with the alarm's instructions.

CO-MINDER:
This generator is equipped with a CO-MINDER system that automatically stops the engine before the surrounding carbon monoxide concentration exceeds a certain concentration.
- Do not modify the CO-MINDER.
- The CO-MINDER cannot prevent all danger associated with or caused by carbon monoxide. Pay careful attention to the location of the generator (see page 25).

Electric Shock Hazards

The generator produces enough electric power to cause a serious shock or electrocution if misused.

- Do not use in wet conditions. Keep the generator dry.
  - Do not use in the rain or snow.
  - Do not use near pool or a sprinkler system.
  - Do not use when your hands are wet.

- If the generator is stored outdoors, unprotected from the weather, check all of the electrical components on the control panel before each use. Moisture or ice can cause a malfunction or short circuit in electrical components that could result in electrocution.

- Do not connect to a building's electrical system unless an isolation switch has been installed by a qualified electrician.

Fire and Burn Hazards

- The exhaust system gets hot enough to ignite some materials.
  - Keep the generator at least 3 feet (1 meter) away from buildings and any type of vehicle, trailer, boat, or other equipment during operation.
  - Do not enclose the generator in any structure.
  - Keep flammable materials away from the generator.
  - Generators with standard equipment transport wheels must not be operated with the wheels and/or stands removed.
  - Do not block intake or exhaust vents, hoses, ports, or restrict air into or away from generator.
  - Do not add, remove, or modify covers, panels, cowlings, or straps.

- The muffler becomes very hot during operation and remains hot for a while after stopping the engine. Be careful not to touch the muffler while it is hot. Let the engine cool before storing the generator.

- Do not pour the water directly on the generator to put out the fire when it occurs. Use an appropriate fire extinguisher specially designed for electric fire or oil fire.

GENERATOR SAFETY

Refuel With Care
Gasoline is highly flammable, and gasoline vapor can explode.

- Do not refuel during operation.
- Allow the engine to cool if it has been in operation.
- Refuel only outdoors in a well-ventilated area and on a level surface.
- Never smoke near gasoline, and keep other flames and sparks away.
- Do not overfill the fuel tank.
- Make sure that any spilled fuel has been wiped up and cleaned before starting the engine.
- Always store gasoline in an approved container.

Vehicles and Transportation Hazards
- Do not operate the generator while it is being transported or while it is mounted to any type vehicle, trailer, or boat.
- Do not operate the generator when it is in a storage, cargo, or security enclosure, including any RV generator bay.
- Always completely remove the generator from the vehicle, RV, truck, trailer, boat, other equipment or structure during operation.
- The generator must remain stationary while in operation.

SAFETY LABEL LOCATIONS

These labels warn you of potential hazards that can cause serious injury. Read them carefully.
If a label comes off or becomes hard to read, contact your servicing dealer for a replacement.

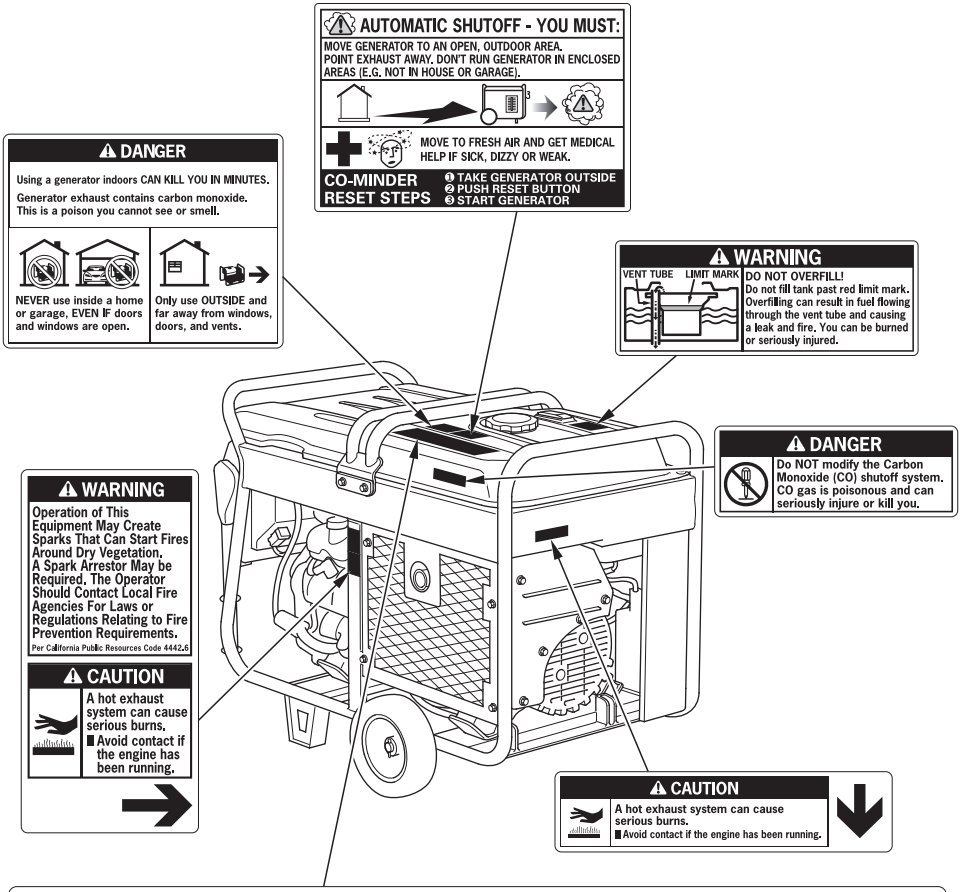

ASSEMBLY

SAFETY

The Importance of Proper Assembly

Proper assembly is essential to operator safety and the reliability of the machine.

⚠ WARNING

Improper assembly can cause an unsafe condition.

Failure to properly follow assembly procedures can lead to serious injury or death.

Follow the procedures and precautions in this owner's manual carefully.

We cannot warn you of every conceivable hazard that can arise in performing this assembly. Only you can decide whether or not you should perform a given task.

ASSEMBLY

Unpacking

1. Remove the generator and loose parts box from the carton.

2. Compare the loose parts with the inventory list below.

Tools Required: 12 mm wrench (2), pliers

NOTICE

Do not add fuel or oil before tipping the generator. Oil or fuel may damage the engine or your property.

Loose Parts

Check all loose parts against the following list. Contact your dealer if any of the loose parts shown below are not included with your generator.

Ref. No.	Description	Qty.
1	Wheel	2
2	Axle Shaft	1
3	Handle assy	1
4	Stand	2
5	20 mm Plain Washer	2
6	4.0×28 mm Split pin	2
7	Collar	2
8	12 mm Washer	2

Ref. No.	Description	Qty.
9	Spring Washer	2
10	Handle holder bolt	2
11	8×45 mm Flange bolt	2
12	8×16 mm Flange bolt	4
13	8×20 mm Flange bolt	4
14	Hanger	1
15	Hanger bracket	1

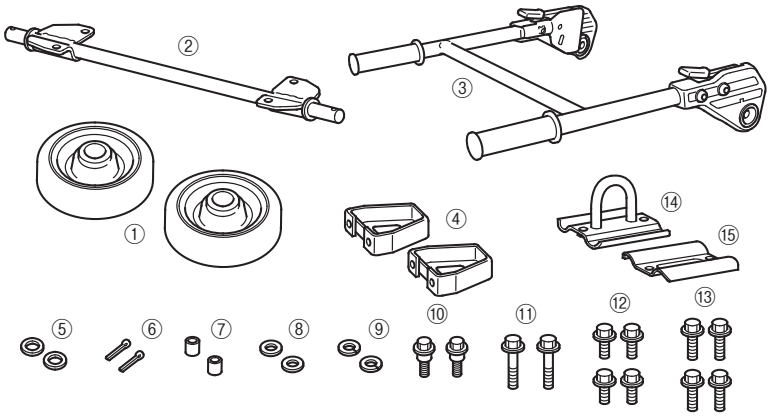

Handle Installation

Install the handle assembly on the generator upper frame using the 12 mm washers, spring washers and handle holder bolts.

Torque: 19.5 lbf·ft (26.5 N·m, 2.7 kgf·m)

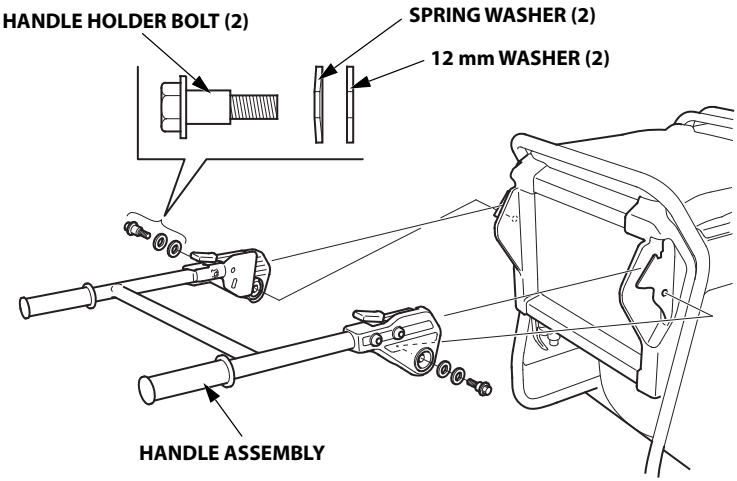

TO EXTEND HANDLE:

Raise the handle to the horizontal position. The handle will click into place when locked.

NOTICE

Pressing down on the handles may damage the handle holder assembly. Only pull up on the handles to move the generator.

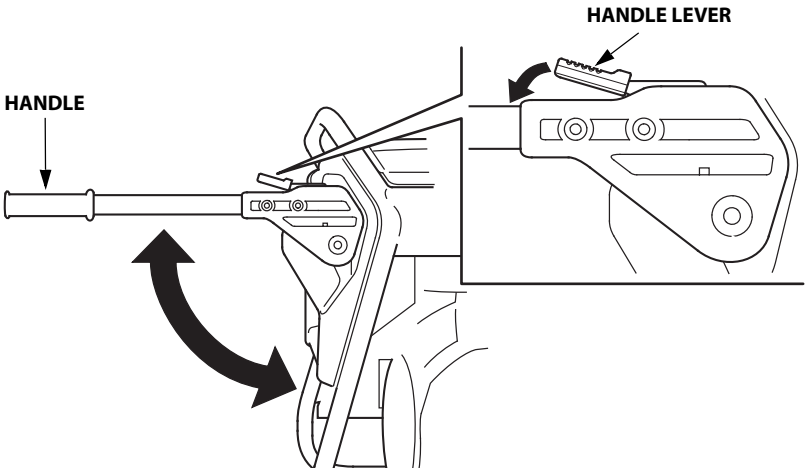

Wheel Kit Installation

1. Install the two stands on the under frame using two 8×20 mm flange bolts, two 8×45 mm flange bolts, and two collars.

2. Install the two wheels on the axle shaft using the plain washers and split pins. After installing the split pins, bend the pins to ensure that the wheels are secured to the axle.

3. Install the axle assembly on the generator using four 8×16 mm flange bolts.

   Torque: 19.5 lbf·ft (26.5 N·m, 2.7 kgf·m)

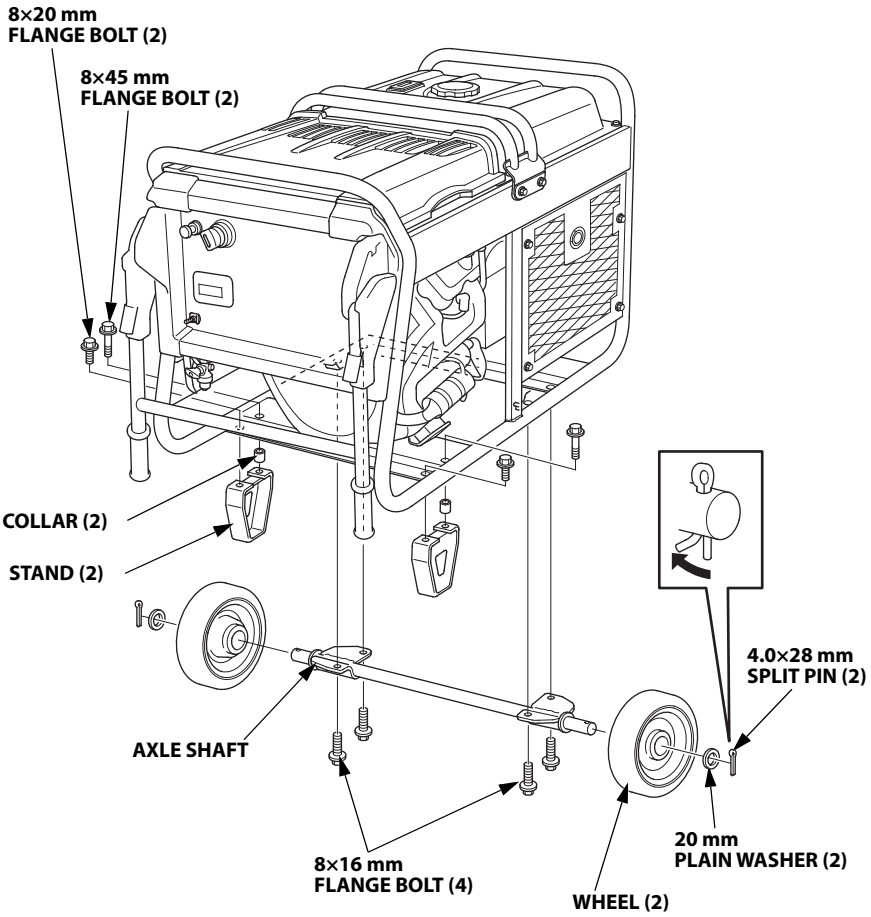

Hanger Kit Installation

1. Remove the center beam.
2. Loosely install the hanger to the center beam using the hanger bracket and two 8×20 mm flange bolts.
3. Reinstall the center beam. Make sure to tighten the four 8×16 mm bolts securely.
4. Position the hanger at the generator's center, and tighten the two 8×20 mm bolts securely.

   Torque: 19.5 lbf·ft (26.5 N·m, 2.7 kgf·m)

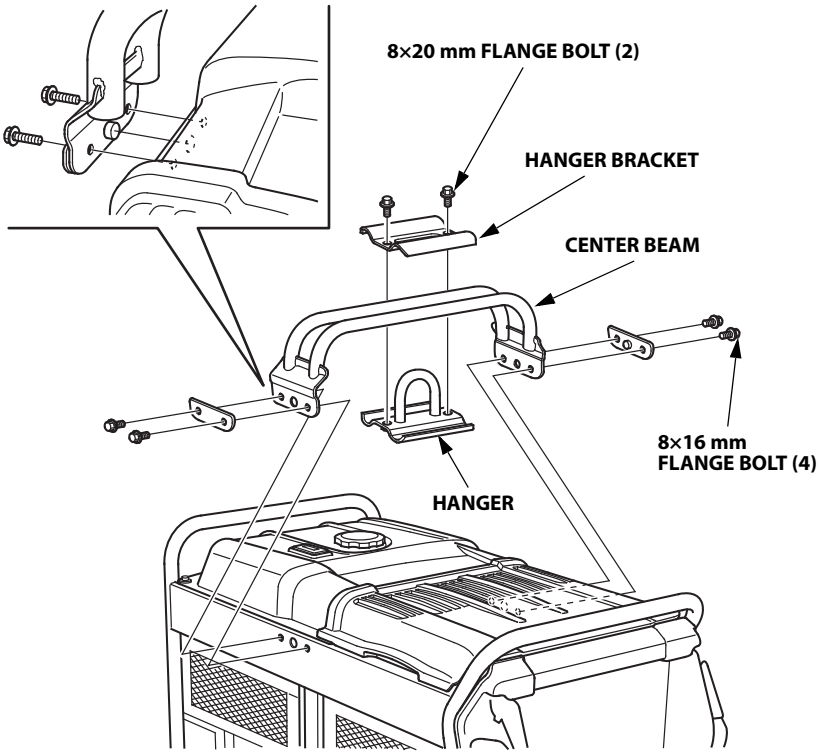

INITIAL USE INSTRUCTIONS

ENGINE OIL

The generator is shipped **WITHOUT OIL** in the engine.

1. Place the generator on a level surface.
2. Open the maintenance cover.
3. Remove the oil filler cap and oil level dipstick.
4. Add enough oil to bring the oil level to the upper limit mark on the oil dipstick. SAE 10W-30 API service category SJ or later (or equivalent) is recommended for general use; for additional recommendations (see page 18).

   Maximum oil capacity:
   Without oil filter replacement: approximately 1.6 US qt (1.5 L)
   With oil filter replacement: approximately 1.8 US qt (1.7 L)

   Do not overfill the engine with oil. If the engine is overfilled, the excess oil may be transferred to the air cleaner housing and air filter.
5. Reinstall the oil level dipstick and filler cap.
6. Close the maintenance cover.

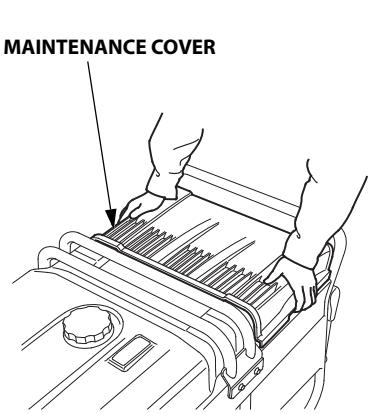

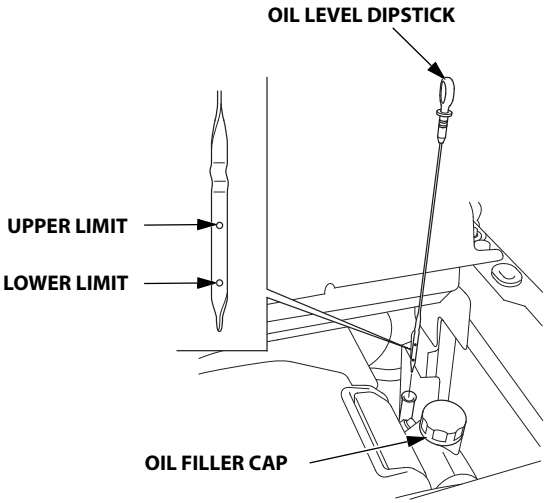

INITIAL USE INSTRUCTIONS

ENGINE OIL RECOMMENDATIONS

Oil is a major factor affecting performance and service life. Use 4-stroke automotive detergent oil.

SAE 10W–30 is recommended for general use. Other viscosities shown in the chart may be used when the average temperature in your area is within the recommended range.

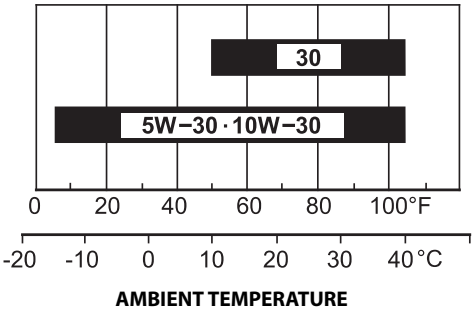

Read the instructions on the oil container before use.

The SAE oil viscosity and service category are in the API label on the oil container. Honda recommends that you use API service category SJ or later (or equivalent) oil.

FUEL

Add fuel to the generator in a well-ventilated area. Fuel only outdoors. Keep gasoline away from appliance, such as pilot lights, barbecues, electric appliances, power tools, etc. Spilled fuel is not only a fire hazard, it causes environmental damage. Fuel carefully to avoid spilling fuel. Wipe up spills immediately. Do not fill the fuel tank above the upper level mark (red) on the fuel strainer. After fueling, reinstall the fuel tank cap securely.

When appropriate, with the engine stopped, check the fuel gauge for the fuel level. If the fuel level is low, wait for the generator to cool off and refill the fuel tank.

This engine is certified to operate on unleaded gasoline with a pump octane rating 86 or higher. Refer to "FUEL RECOMMENDATIONS" (see page 21) for additional fuel recommendations.

⚠ WARNING

Gasoline is highly flammable and explosive.

You can be burned or seriously injured when handling fuel.

- Stop the engine and let it cool before handling fuel.
- Keep heat, sparks, and flame away.
- Handle fuel only outdoors.
- Keep away from your vehicle.
- Wipe up spills immediately.

NOTICE

Fuel can damage paint and plastic. Be careful not to spill fuel when filling your fuel tank. Damage caused by spilled fuel is not covered under the Distributor's Limited Warranty.

INITIAL USE INSTRUCTIONS

1. Remove the fuel tank cap.
2. Fuel carefully to avoid spilling fuel. Do not fill the fuel tank above the upper level mark (red) on the fuel strainer.
3. After refueling, reinstall the fuel tank cap securely.

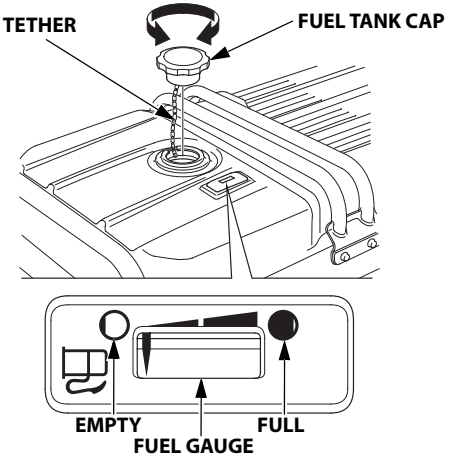

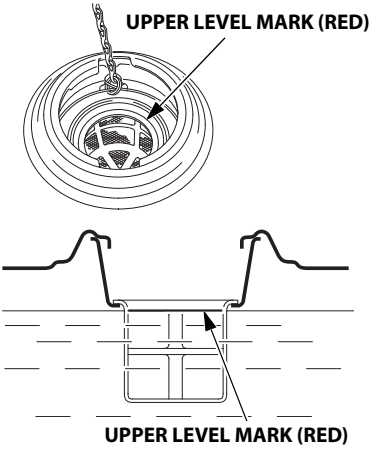

NOTICE

Fuel can damage paint and plastic. Be careful not to spill fuel when filling your fuel tank. Damage caused by spilled fuel is not covered under the Distributor's Limited Warranty.

Move the generator at least 10 feet (3 meters) away from the fueling source and site before starting the engine.

FUEL RECOMMENDATIONS

This engine is certified to operate on regular unleaded gasoline with a pump octane rating of 86 or higher.

Never use gasoline that is stale, contaminated, or mixed with oil. Avoid getting dirt or water in the fuel tank.

You may use regular unleaded gasoline containing no more than 10% ethanol (E10) or 5% methanol by volume. In addition, methanol must contain cosolvents and corrosion inhibitors.

Use of fuels with content of ethanol or methanol greater than shown above may cause starting and/or performance problems. It may also damage metal, rubber, and plastic parts of the fuel system.

Engine damage or performance problems that result from using a fuel with percentages of ethanol or methanol greater than shown above and leaded gasoline are not covered under the Distributor Limited Warranty.

If your equipment will be used on an infrequent basis, refer to the fuel section of "STORAGE" chapter (see page 81) for additional information regarding fuel deterioration.

CONTROLS & FEATURES

COMPONENT & CONTROL LOCATIONS

Use the two illustrations on these pages to locate and identify the most frequently used controls.

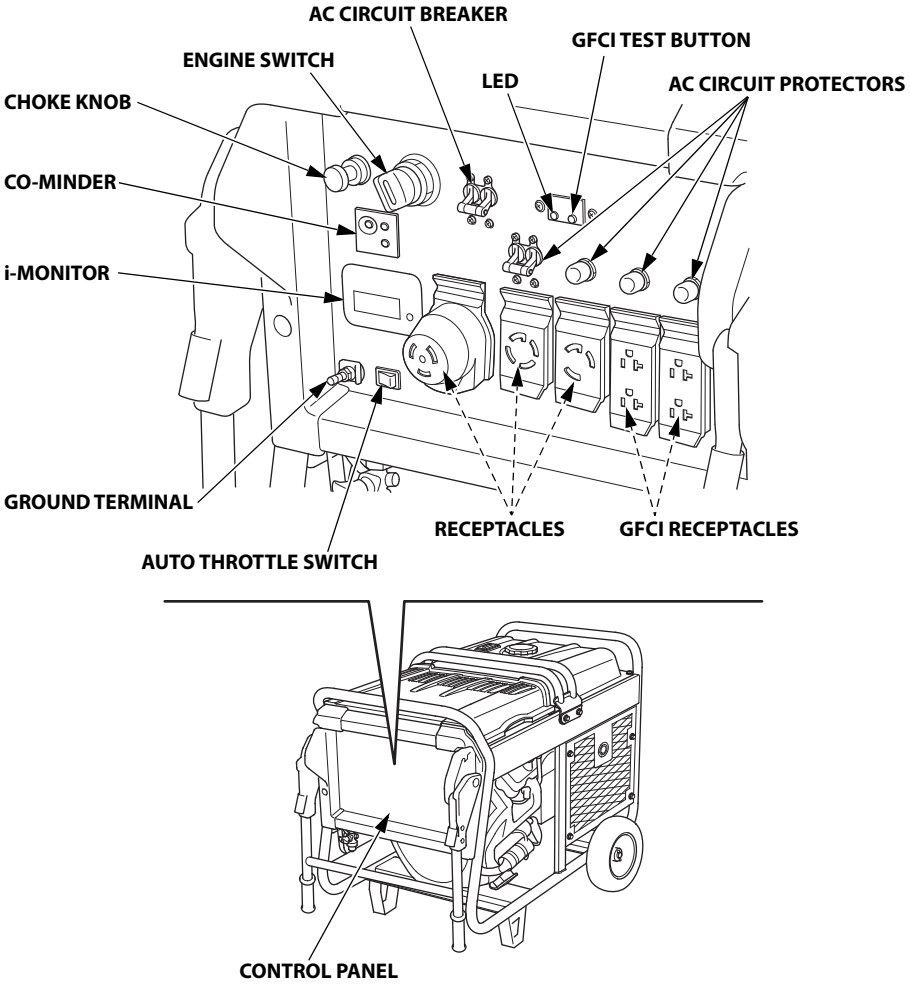

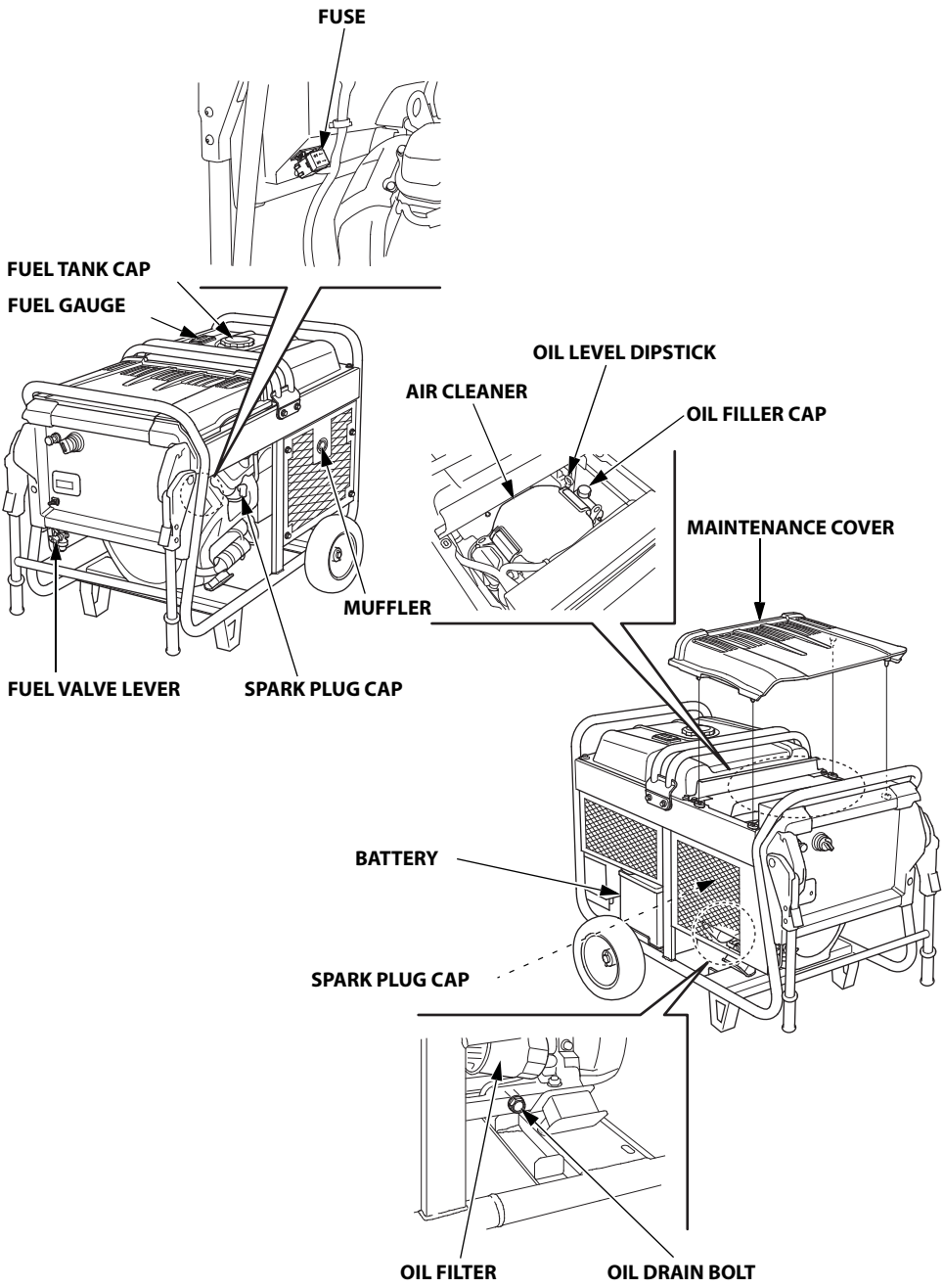
FUSE
FUEL TANK CAP
FUEL GAUGE
OIL LEVEL DIPSTICK
AIR CLEANER
OIL FILLER CAP
MAINTENANCE COVER
MUFFLER
FUEL VALVE LEVER
SPARK PLUG CAP
BATTERY
SPARK PLUG CAP
OIL FILTER
OIL DRAIN BOLT

CONTROLS

Fuel Valve Lever

The fuel valve lever is located between the fuel tank and carburetor.

The fuel valve lever must be in the ON position for the engine to run.

After stopping the engine, turn the fuel valve lever to the OFF position.

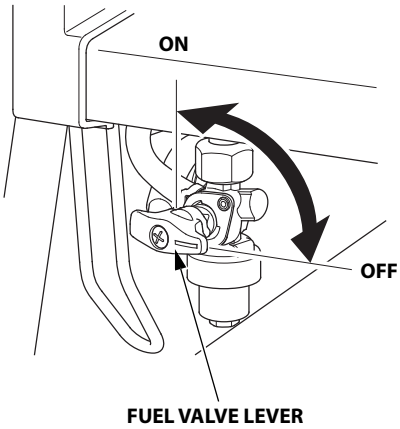

Engine Switch

The engine switch controls the ignition system, and it operates the electric starter.

OFF – Stops the engine. The engine switch key can be removed/inserted.

ON – Running position.

START – Operates the electric starter.

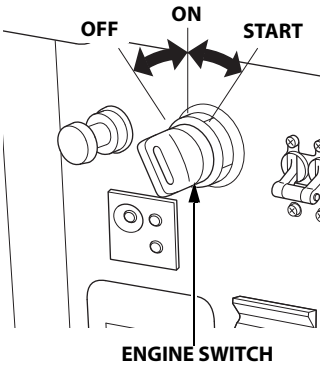

Choke Knob

The choke knob opens and closes the choke valve in the carburetor.

The CLOSED position enriches the fuel mixture for starting a cold engine.

The OPEN position provides the correct fuel mixture for operation after starting, and for restarting a warm engine.

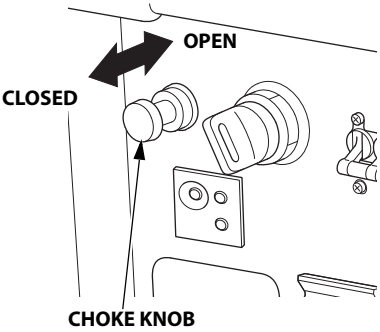

CO-MINDER (CO Shut-off System)
CO-MINDER is a system that automatically stops the engine before the surrounding carbon monoxide concentration exceeds a certain level.
If the CO-MINDER detects a high carbon monoxide concentration, the engine will stop and the CO ALARM indicator will flash for about five minutes.

Continuously using the generator in areas with high concentrations of carbon monoxide can cause serious health hazards due to carbon monoxide poisoning (see page 8). If you are in the same area as the generator, evacuate the area immediately. Get fresh air and seek medical attention immediately if you feel sick or suspect you have inhaled carbon monoxide. Ventilate the area or space where the generator is located.

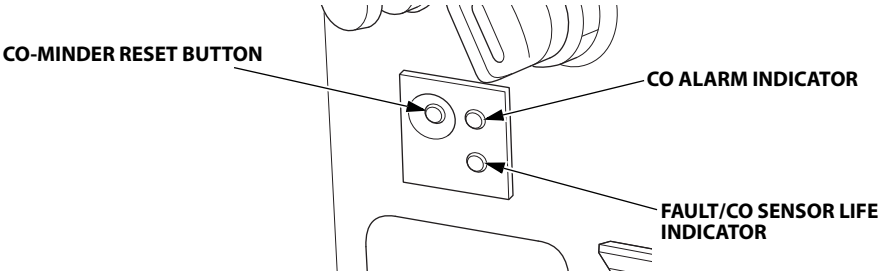

If the engine is stopped by the CO-MINDER system, change the operating location of the generator.

- Do not operate the generator in an enclosed or partly enclosed area such as a garage.
- Do not enclose or cover the generator with boards or a tent, even when it is outside and away from of a building.
- Place the generator so that the muffler is pointed in the same direction as the wind is blowing and the exhaust is directed away from buildings, other structures, or vehicles.
- Avoid placing the generator near devices that emit carbon monoxide, such as another generator.

RESTARTING THE ENGINE

When the engine is stopped automatically by CO-MINDER, press the CO-MINDER reset button to restart the engine.

If the engine is restarted without pressing the CO-MINDER reset button, the engine will automatically stop immediately after restarting and the CO ALARM indicator will flash for approximately five minutes.

Resetting the CO-MINDER is possible only after the CO ALARM indicator is turned off.

CO-MINDER MALFUNCTION DETECTION

If the CO-MINDER detects a system malfunction, the engine will stop automatically and the FAULT/CO SENSOR LIFE indicator will flash for approximately five minutes. Press the CO-MINDER reset button to turn off the FAULT/CO SENSOR LIFE indicator. If the engine will not remain running after attempting to restart it and the FAULT/CO SENSOR LIFE indicator comes on again, there may be a system malfunction. If this occurs, do not attempt to restart the generator more than two times. If the CO-MINDER system is malfunctioning, it cannot warn you of potential high concentrations of carbon monoxide. Move the generator to a well-ventilated location and consult an authorized Honda Power Equipment dealer.

CO SENSOR LIFE

If the FAULT/CO SENSOR LIFE indicator flashes when operating the generator, the CO-MINDER may be reaching the end of its useful lifespan and will eventually need replacement.

- If the indicator flashes once every four seconds, this means there is approximately six months to one year of life left in the CO-MINDER.
- If the indicator flashes once every two seconds, this means there is approximately six months of life or less left in the CO-MINDER.

NOTICE

- *The FAULT/CO SENSOR LIFE indicator indicates the estimated life left in the CO-MINDER.*
- *The generator stopping period and storage period are also included in the useful lifespan of the CO-MINDER.*
- *Contact an authorized Honda Power Equipment dealer for CO-MINDER replacement.*

AC Circuit Protectors

The AC circuit protectors will automatically switch to OFF if there is a short circuit or a significant overload of the generator at each receptacle. If an AC circuit protector switches OFF automatically, check that the appliance is working properly and does not exceed the rated load capacity of the circuit before resetting the AC circuit protector ON.

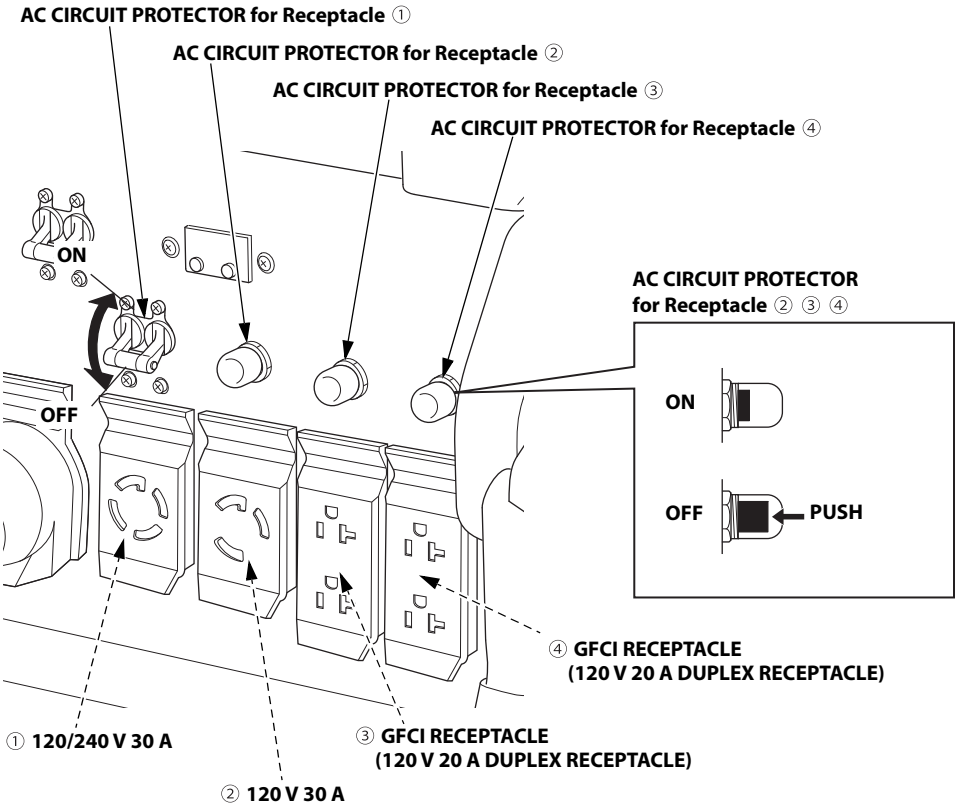

AC Circuit Breaker

The AC circuit breaker will automatically switch OFF in the following cases.

- If there is a short circuit or a significant overload at the receptacles.
- If there is a ground-fault current from either receptacles A, B or C.

The AC circuit breaker may be used to switch the generator power ON or OFF.

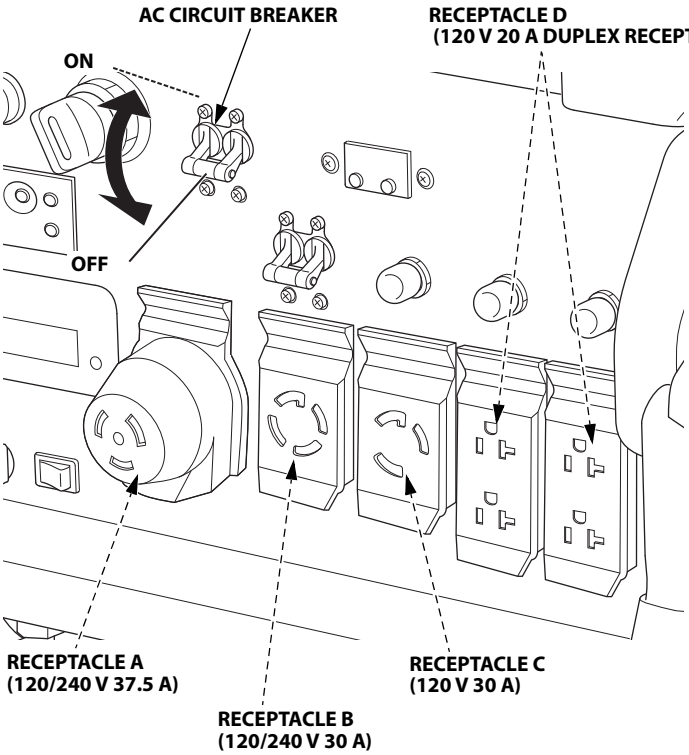

Ground Fault Circuit Interrupter (GFCI)

This generator has two types of Ground Fault Circuit Interrupter (GFCI) systems, GFCI system ① and GFCI system ②.

GFCI SYSTEM ①
(120V-30A, 120V/240V-30A, 120V/240V-37.5A RECEPTACLES)
If there is a ground-fault current from either A, B or C receptacle, it will shut off the power to receptacles A, B, and C.
If this GFCI system ① activates, the AC circuit breaker will be switched to OFF position and it will shut off power to all receptacles, including GFCI system ② 120 V 20 A DUPLEX RECEPTACLES.

GFCI SYSTEM ②
(120V-20A DUPLEX RECEPTACLE)
If there is a ground-fault current from either 120 V 20 A DUPLEX RECEPTACLE, then the GFCI System ② will shut off the power to that 120 V 20 A DUPLEX RECEPTACLE. GFCI system ① will not be affected.

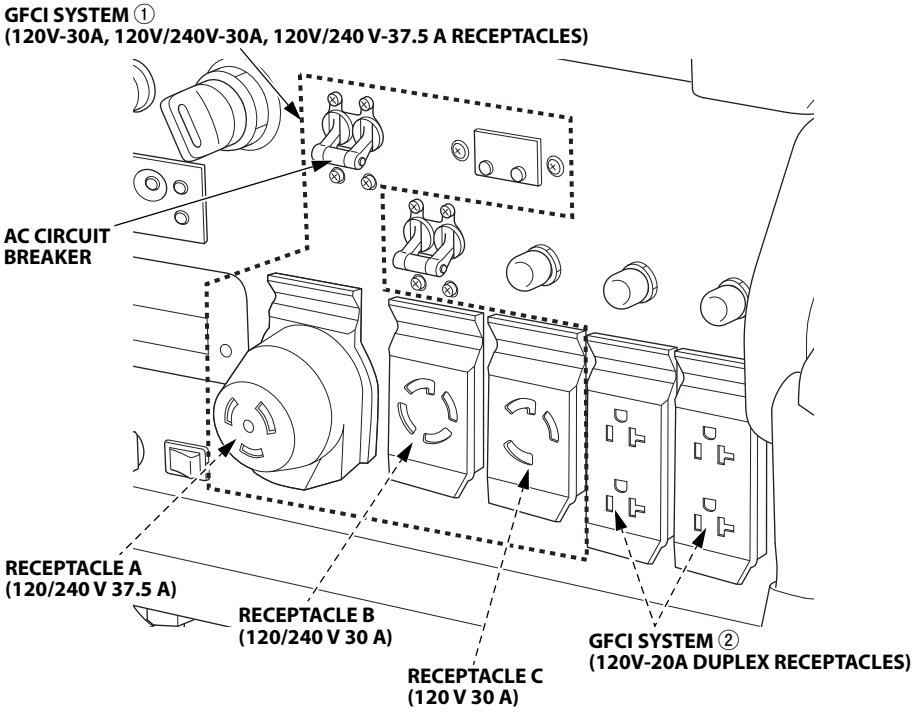

CONTROLS & FEATURES

All receptacles on the generator are protected by a Ground Fault Circuit Interrupter (GFCI) for protection against the shock hazard of ground-fault current.

An example of ground-fault current is the current that would flow through a person who is using an appliance with faulty insulation and, at the same time, is in contact with an electrical ground such as a plumbing fixture, wet floor, or earth. The GFCI will protect against current flowing through that person.

The GFCI will not protect against short circuits or overloads.

GFCIs can be expected to interrupt power supply if there are ground faults or stray current imposed on the wiring by other electrical devices, wiring, or equipment. Due to the risk of a power interruption, this generator is not recommended for powering medical or life support equipment.

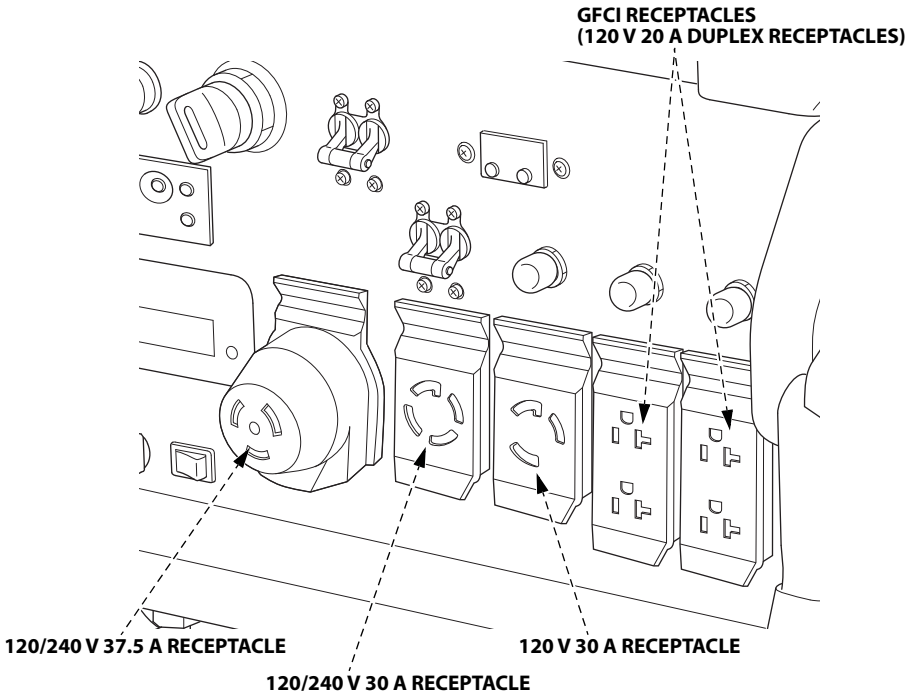

Auto Throttle® System

The Auto Throttle® system automatically reduces engine speed when all loads are turned off or disconnected. When appliances are turned on or reconnected, the engine returns to the rated speed.

SWITCH POSITION

ON - Recommended to minimize fuel consumption and further reduce noise levels when no load is applied to the generator.

OFF - The Auto Throttle system does not operate. Recommended to minimize warm-up time when the generator is started and when starting a load with large start-up power requirements.

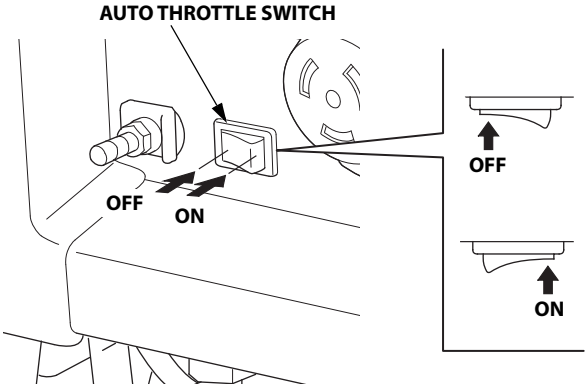

Folding Handle

The foldable handle is intended for ease of transportation and should be folded when the generator is stationary. Do not rest objects on the extended handle.

To extend the handle, lift handle upward. Lock levers will lock and secure the handle into place.

To fold the handle,

1. Press both handle lock levers downward.

2. Lower the handle.

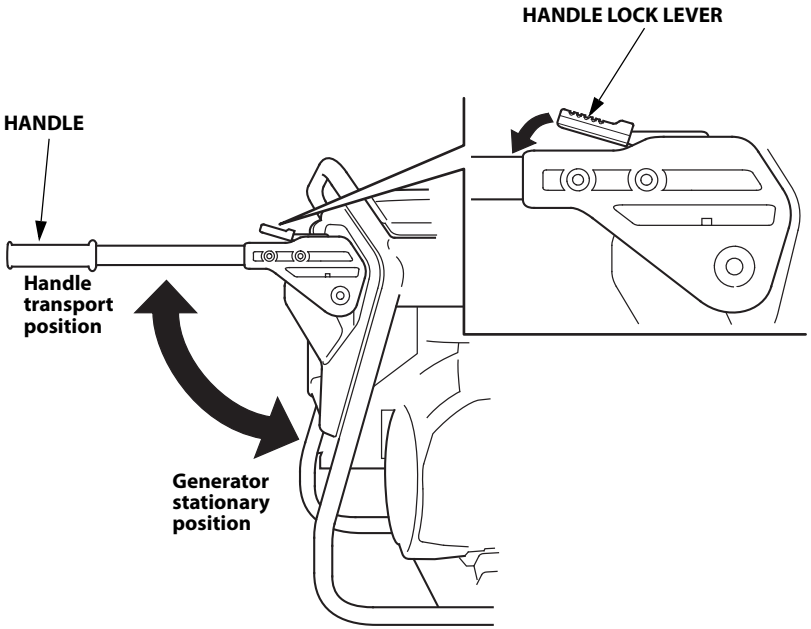

FEATURES

Oil Alert® System

The Oil Alert® system is designed to prevent engine damage caused by an insufficient amount of oil in the crankcase. Before the oil level in the crankcase can fall below a safe limit, the Oil Alert indicator will come on and the Oil Alert system automatically will stop the engine (the engine switch will remain in the ON position).

The i-Monitor display will show “OIL” on the screen and the Oil Alert indicator will illuminate.

If the engine stops or the Oil Alert indicator comes on when you turn the engine switch to the START position, check the engine oil level (see page 43) before troubleshooting in other areas.

Even when oil is added to the engine, the generator will not restart until the Oil Alert indicator is reset. To reset the Oil Alert indicator, turn the engine switch to the OFF position, add the proper amount of oil (see page 67), and then turn the engine switch back to the ON position.

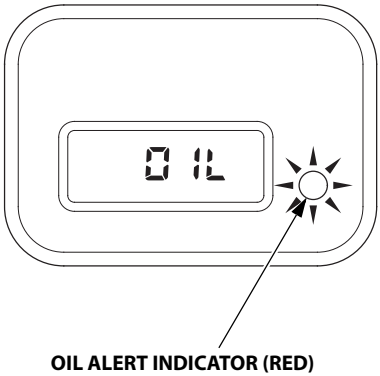

i-Monitor
The i-Monitor is a user interface that allows the operator to view (when the generator is running) total operating time in hours, generator output voltage, battery voltage, and error messages.

i-Monitor at Start Up
When the engine switch is turned to the ON position, all segments of the i-Monitor display turn on for a second.



After showing all segments, the i-Monitor shows current accumulated hours and the battery voltage alternately for three seconds.

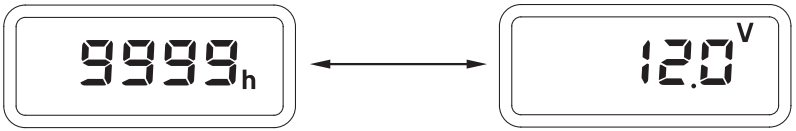

When the engine is started and the generator works, the i-Monitor shows output voltage.



Backlight blinks
If you turn the engine switch to the ON position but then don't start the engine within 1 minute, the display starts to blink.
Start the engine or turn the engine switch to the OFF position.
The display also blinks when the engine stops due to an error. In such a case, the display starts to blink as soon as the engine stops.

i-Monitor Display

The four-digit screen displays the total operating hours, battery voltage, and power output voltage or any activated error messages.

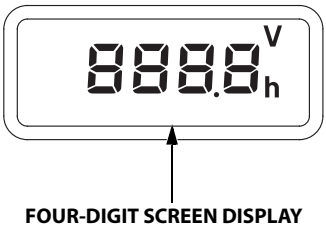

Total Operating Hours

This mode displays the total operating hours of the generator. When the generator is running, the total operating time accumulates.

The total operating hours can show from 0 up to 9,999 hours. When it reaches 10,000 hours, the display returns to ''0''.

When the total operating hours reach 29,999 hours, the i-monitor will continuously show 9,999 hours.

Base the generator's maintenance schedule on the accumulated time displayed.



Power Output Voltage
This mode displays an approximate single-phase output voltage.



Battery Voltage
This mode displays the battery condition, expressed in Volts DC.
The battery voltage can be displayed from 8 V up to 16 V.
When the battery voltage is less than 8 V, the i-Monitor shows 8 V. When above 16 V, 16 V is shown.

In this generator, the engine will not start if the battery is removed. Also, if the battery is disconnected when the generator is operating, the engine will stop.



i-Monitor System Error Messages

If the generator has a system malfunction, it will show an error message on the i-Monitor display. If an error message displays, contact an authorized Honda Power Equipment dealer.

When there are a number of errors, they are indicated alternately for two seconds for each.

Error code	Type of error	Consequence · treatment
E-04	Engine over rev	Engine stops
E-31	High AC voltage	Engine stops
E-32	ROM/RAM failure	Engine stops
E-33	FET overheat	Generator stops
------	Communication error	Contact an authorized Honda Power Equipment dealer.
----h	Failed to read out accumulated hours	Contact an authorized Honda Power Equipment dealer.

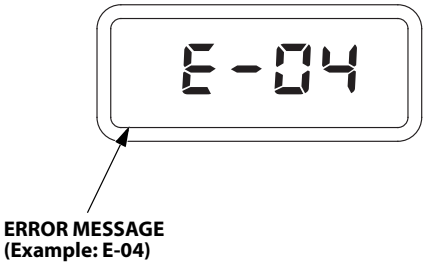

ERROR MESSAGE
(Example: E-04)

Ground Terminal
The ground terminal is connected to the frame of the generator, the metal non-current-carrying parts of the generator, and the ground terminals of each receptacle.

Before using the ground terminal, consult a qualified electrician, electrical inspector, or local agency having jurisdiction for local codes or ordinances that apply to the intended use of the generator.

NEUTRAL BONDED TO FRAME:
There is a permanent conductor between the generator (stator winding) and the frame.

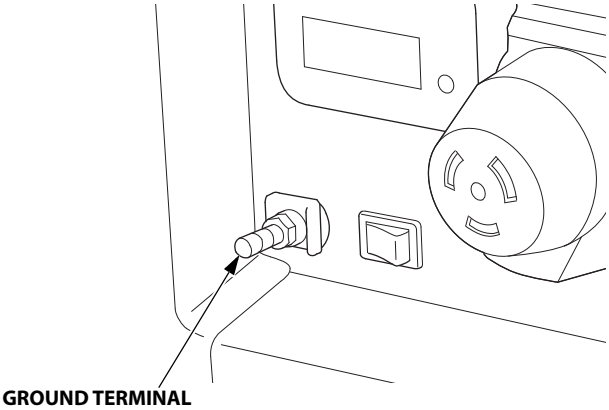

Fuel Gauge

The fuel gauge is a mechanical device that measures the fuel level in the tank. The red indicator in the window will reference the level in relation to full or empty. To provide increased operating time, start with a full tank before beginning operation. Check the fuel level with the generator on a level surface. Always refuel with the engine OFF and cool.

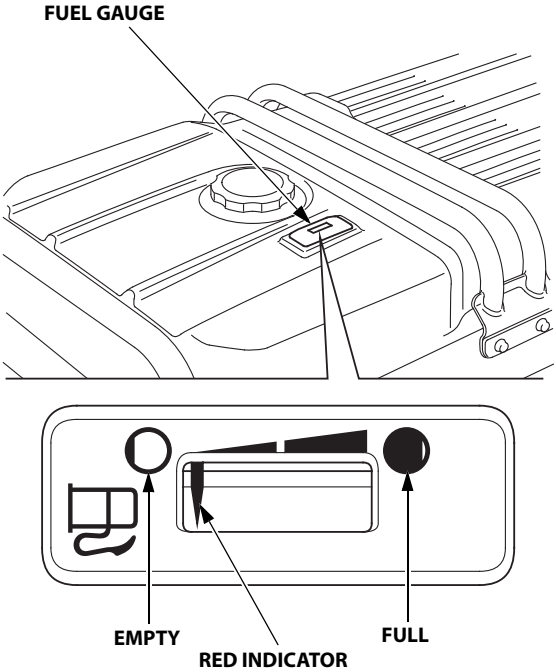

BEFORE OPERATION

ARE YOU READY TO GET STARTED?

Your safety is your responsibility. A little time spent in preparation will significantly reduce your risk of injury.

Knowledge
Read and understand this manual. Know what the controls do and how to operate them.

Familiarize yourself with the generator and its operation before you begin using it. Know how to quickly shut off the generator in case of an emergency.

If the generator is being used to power appliances, be sure that they do not exceed the generator's load rating (see page 60).

IS YOUR GENERATOR READY TO GO?

For your safety, to ensure compliance with environmental regulations, and to maximize the service life of your equipment, it is very important to take a few moments before you operate the generator to check its condition. Be sure to take care of any problem you find, or have your servicing dealer correct it, before you operate the generator.

⚠ WARNING

Failure to properly maintain this generator, or failing to correct a problem before operation, could result in a significant malfunction.

Some malfunctions can cause serious injuries or death.

Always perform a pre-operation inspection before each operation and correct any problems.

To prevent a possible fire, keep the generator at least 3 feet (1 meter) away from building walls, vehicles, and other equipment during operation. Do not place flammable objects close to the engine or exhaust.

Before beginning your pre-operation checks, be sure the generator is on a level surface and the engine switch is in the OFF position.

NOTICE

Generators with standard equipment transport wheels must not be operated with the wheels and/or stands removed or else the generator may not operate correctly and can become damaged.

Check the Engine

- Before each use, look around and underneath the engine for signs of oil or gasoline leaks.
- Check the engine oil level (see page 43). A low engine oil level will cause the Oil Alert system to shut down the engine.
- Check the air filters (see page 44). Dirty air filters will restrict air flow to the fuel system, reducing engine and generator performance.
- Check the fuel level (see page 19). Starting with a full tank will help to eliminate or reduce operating interruptions for refueling.

Check the GFCI

Check the GFCI operation (see page 53) after starting the engine.

Check the Battery

Check the electrolyte level (see page 77). If the electrolyte level is below the LOWER level, sulfation and battery plate damage will occur.

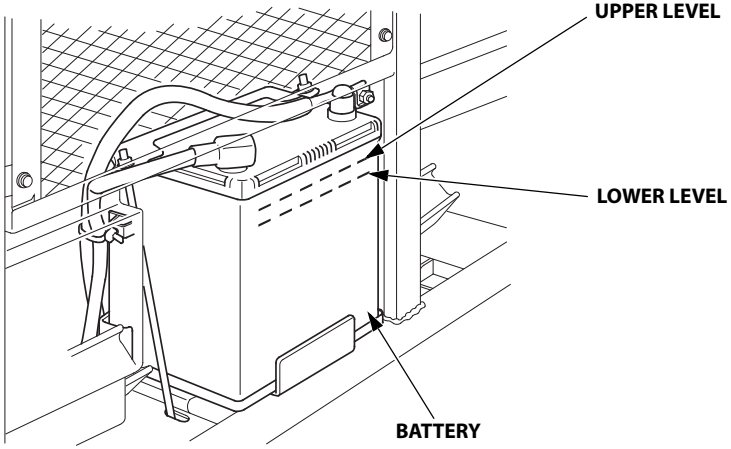

AC Appliance and Power Cord
Before connecting an AC appliance or power cord to the generator:

- Use grounded 3-prong extension cords, tools, and appliances, or double-insulated tools and appliances.
- Inspect cords and plugs, and replace if damaged.
- Do not use cord lengths greater than 164 feet (50 meters), and do not use multiple tools and appliances with built-in noise filters. Such use may activate the GFCI and interrupt power supply.
- Make sure that the appliance is in good working order. Faulty appliances or power cords can create a potential for electric shock.
- Make sure the electrical rating of the tool or appliance does not exceed the rated power of the generator or the receptacle being used.
- Do not exceed the current limit specified for any one receptacle.

ENGINE OIL LEVEL CHECK

Check the engine oil level with the engine stopped and in a level position.

1. Open the maintenance cover to access the oil level dipstick.
2. Remove the oil level dipstick and wipe it clean.
3. Fully insert the dipstick, then remove it to check the oil level.
4. If the level is near or below the lower limit mark on the dipstick, remove the oil filler cap, and fill with the recommended oil (see page 18) to the upper limit mark on the oil level dipstick.

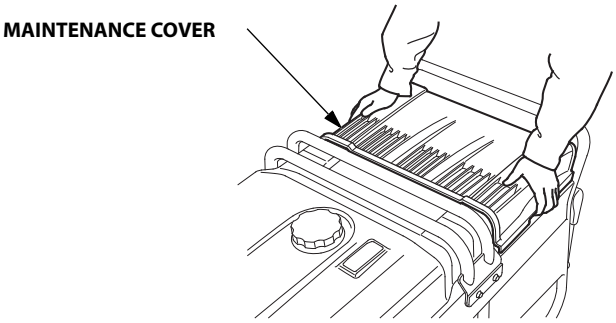

5. Reinstall the oil level dipstick and filler cap.
6. Close the maintenance cover.

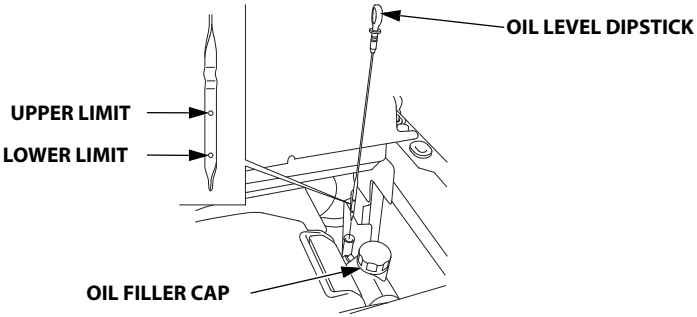

The Oil Alert system will automatically stop the engine before the oil level falls below safe limits. However, to avoid the inconvenience of an unexpected shutdown, check the oil level regularly.

AIR FILTER CHECK

1. Open the maintenance cover to access the air cleaner.

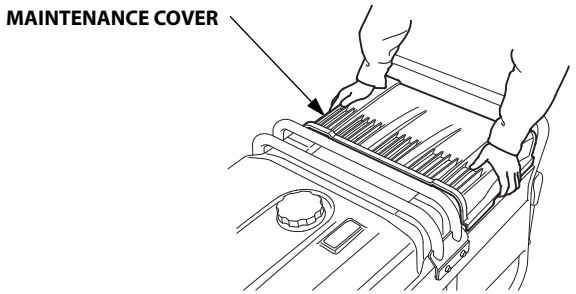

2. Pull the air cleaner cover latch to the unlocked position, and remove the cover.
   Remove the wing nut from the paper filter element.
   Remove the paper filter element and foam filter element from the air cleaner case.
   Remove the foam filter element from the paper filter element.

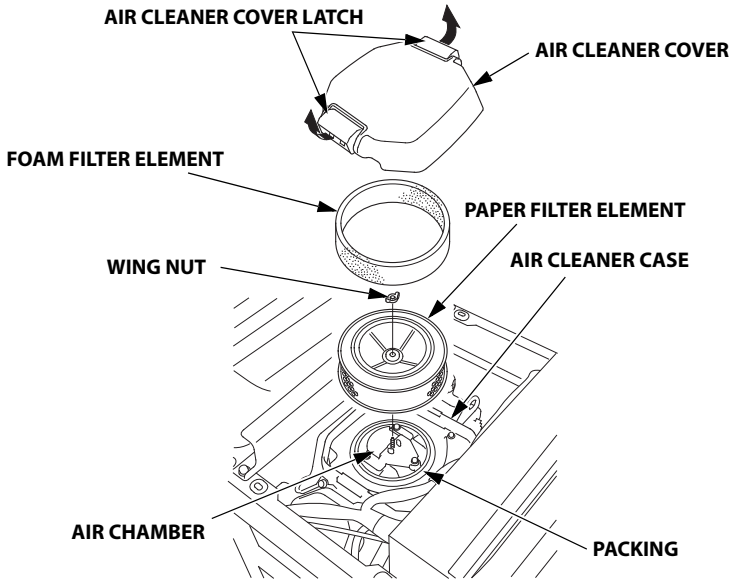

3. Inspect both filter elements, and replace them if they are damaged. Always replace the paper filter element at the scheduled interval (see page 66).

4. Clean the filter elements if they are to be reused.
   Paper filter element: Tap the filter element several times on a hard surface to remove dirt, or blow compressed air [not exceeding 30 psi (207 kPa, 2.1 kgf/cm^2)] through the filter element from the air cleaner case side.

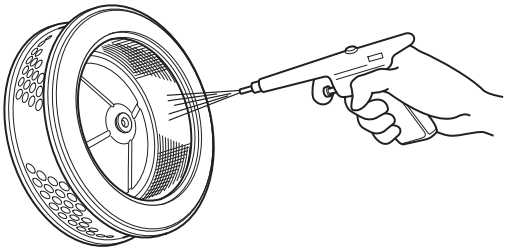

   Never try to brush off dirt; brushing will force dirt into the fibers. Replace the paper filter element if it is excessively dirty.

   Foam filter element: If the foam filter is dirty, clean it as described on page 68. Replace the foam filter if it is damaged.

5. Wipe dirt from the inside of the air cleaner body and cover, using a moist rag. Be careful to prevent dirt from entering the air chamber that leads to the carburetor.

6. Place the foam filter element over the paper filter element, and reinstall the assembled filter element. Be sure the packing is in place beneath the filter element. Tighten the wing nut securely.

7. Lock the air cleaner cover latch securely.

8. Close the maintenance cover.

NOTICE

Operating the engine without the air filters, or with a damaged air filters, will allow dirt to enter the engine, causing rapid engine wear. This type of damage is not covered by the Distributor's Limited Warranty.

SAFE OPERATING PRECAUTIONS

Before operating the generator, review chapters "GENERATOR SAFETY" (see page 7).

For your safety, do not operate the generator in an enclosed, or partly enclosed area such as a garage (even if the door is open) or near structures or vehicles. Your generator's exhaust contains poisonous carbon monoxide gas that can collect rapidly in such areas, structures, vehicles, trailers, or boats.

- Do not operate the generator when it is in a storage, cargo, or security enclosure, including any RV generator bay.
- Always completely remove the generator from the vehicle, trailer, boat or other equipment or structure during operation.
- The generator must remain stationary while in operation.

⚠ WARNING

Exhaust contains poisonous carbon monoxide gas that can build up to dangerous levels in enclosed or partly enclosed areas.

Breathing carbon monoxide can cause unconsciousness or death.

Never run this product's engine in an enclosed, or even partly enclosed area.

OPERATION

STARTING THE ENGINE

To prevent a possible fire, keep the generator at least 3 feet (1 meter) away from building or trailer walls, vehicles, trailers, boats, and other equipment during operation. Do not place flammable objects close to the engine.

NOTICE

- *Operating this generator less than 3 feet (1 meter) from a building, obstruction, or when it is in an enclosure, a storage or security compartment/bay, can cause overheating and damage the generator.*
- *For proper cooling, allow at least 3 feet (1 meter) of empty space above and around the generator.*
- *Since the CO-MINDER may detect the carbon monoxide concentration and the engine may stop automatically, pay attention to the direction of exhaust and where the generator is located (see page 25).*

Refer to "SAFE OPERATING PRECAUTIONS" on page 46 and perform the "IS YOUR GENERATOR READY TO GO?" checks (see page 40).

Refer to "AC OPERATION" (see page 59) for connecting loads to the generator.

1. Make sure that all appliances are disconnected from the AC receptacle.
2. Make sure that the AC circuit breaker is in the OFF position.

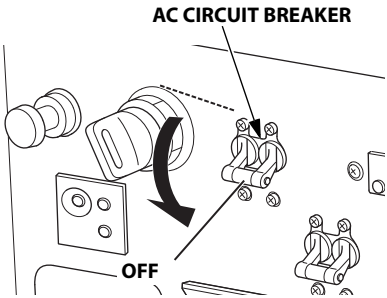

3. Turn the fuel valve lever to the ON position.

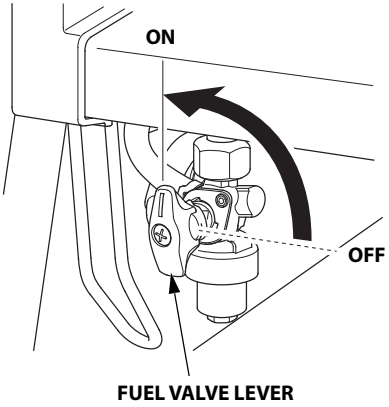

4. Pull the choke knob to the CLOSED position to start a cold engine.

   Leave the choke knob in the OPEN position to start a warm engine.

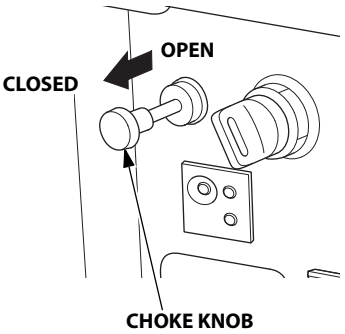

5. Make sure the Auto Throttle switch is in the OFF position, or more time will be required for warm up.

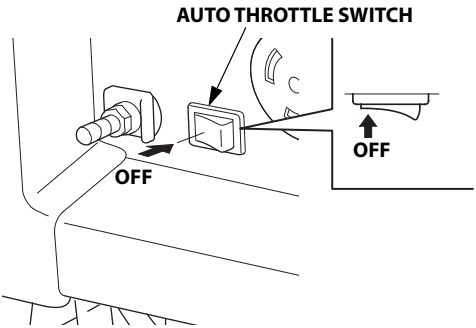

6. Start the engine.

   Turn the engine switch to the START position, and hold it there until the engine starts. When the engine starts, release the key, allowing the switch to return to the ON position.

   If the engine fails to start within 5 seconds, release the key, and wait at least 10 seconds before operating the starter again.

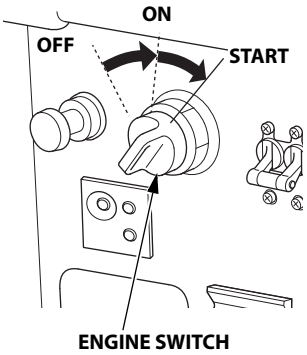

NOTICE

Using the electric starter for more than 5 seconds at a time will overheat the starter motor and can damage it.

Do not leave the engine switch in the ON position when the generator is not operating as the battery will be drained. Turn the engine switch to the OFF position when not in use.

7. If the choke knob was pulled to the CLOSED position to start the engine, gradually move it to the OPEN position as the engine warms up.

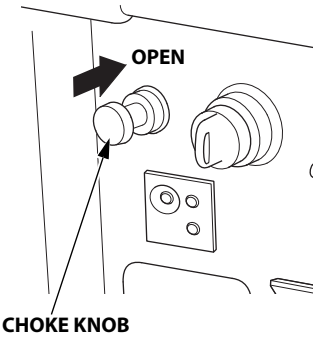

8. If you wish to use the Auto Throttle system, turn the Auto Throttle switch to the ON position after the engine has warmed up for 2 or 3 minutes.

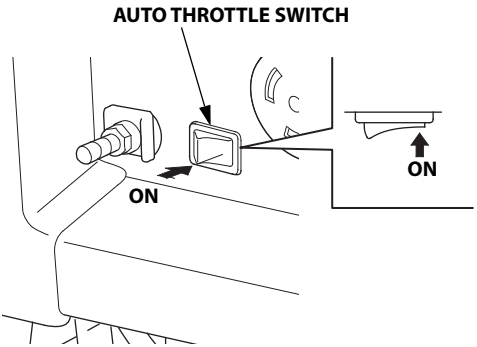

STOPPING THE ENGINE

To stop the engine in an emergency, simply turn the engine switch to the OFF position. Under normal conditions, use the following procedure.

1. Turn off or disconnect all appliances that are connected to the generator.
2. Switch the AC circuit breaker to the OFF position.

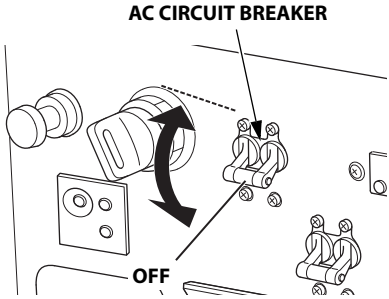

3. Turn the engine switch to the OFF position.

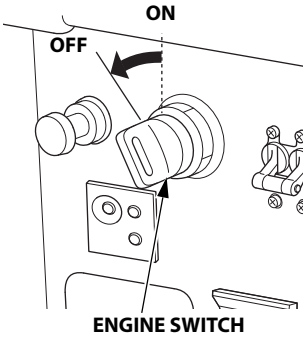

4. Turn the fuel valve lever to the OFF position.

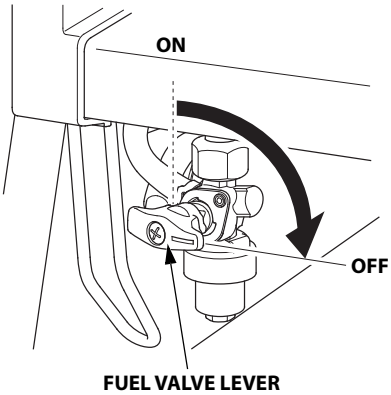

HOW TO RESTART WHEN STOPPED BY CO-MINDER (CO SHUT-OFF SYSTEM)

When the engine is automatically stopped by the CO-MINDER, move the generator to an area with fresh air and away from any device that may be emitting carbon monoxide, such as another generator. Press the CO-MINDER reset button and then follow the standard procedure for starting the engine. When the CO ALARM indicator or the FAULT/CO-MINDER LIFE indicator flashes, press the CO-MINDER reset button to turn off the indicator.

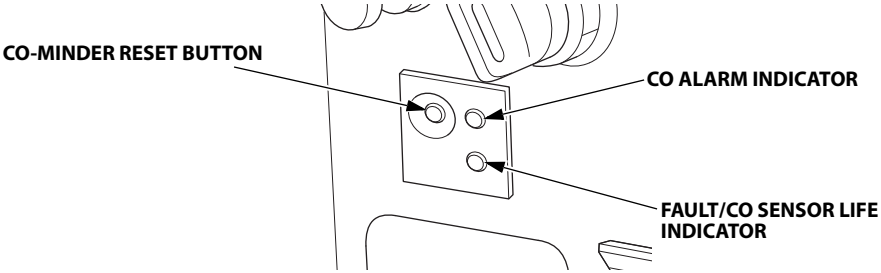

GFCI OPERATION CHECK

Always check GFCI system ① and GFCI system ② operation before using the generator.

⚠ WARNING

A faulty GFCI system will not provide proper protection against electric shock as designed.

An electric shock can result in serious injury or death.

Always perform the GFCI system inspection before using the generator. If the GFCI system fails the test, the generator must be repaired by an authorized Honda servicing dealer before use.

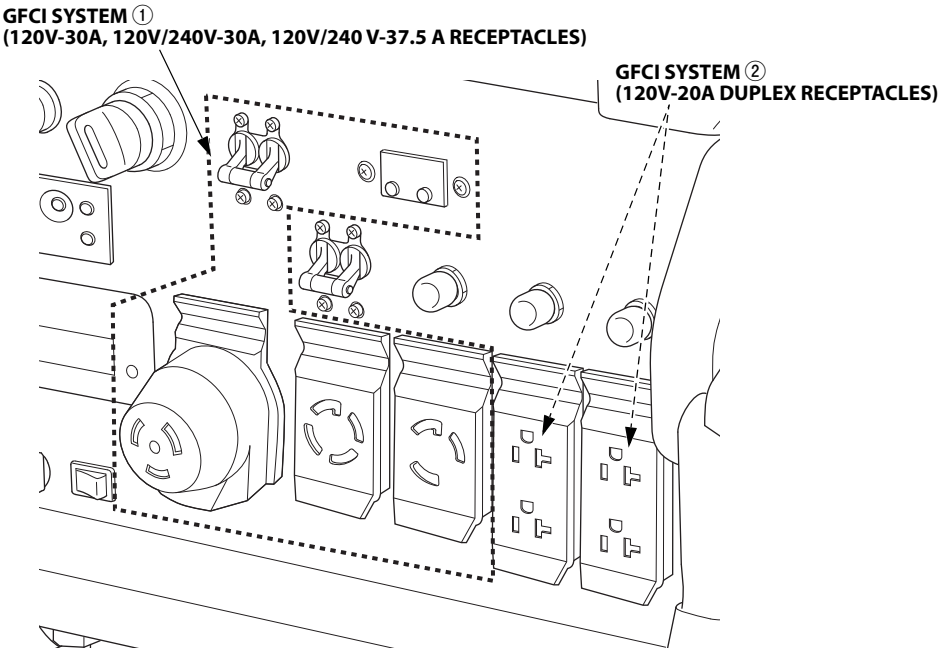

GFCI System ①
(120V-30A, 120V/240V-30A, 120V/240V-37.5A Receptacles)

1. Unplug all tools and appliances from the generator.
2. Start the engine (see page 47).
3. Turn the AC circuit breaker to the ON position.
4. Press the GFCI TEST button. The LED comes on, and the AC circuit breaker switches to the OFF position.

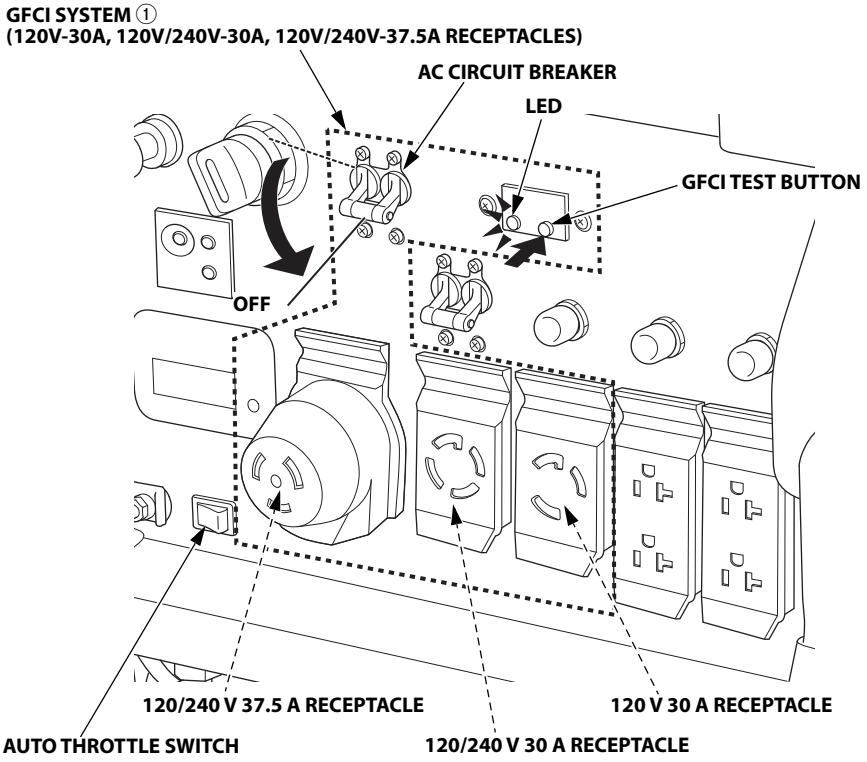

5. When you switch the AC circuit breaker to the ON position, LED will turn off. If the GFCI and AC circuit breaker do not function as described, take the generator to an authorized Honda Power Equipment dealer for repair.

   • If the red GFCI indicator starts to blink continuously, contact an authorized Honda Power Equipment dealer.

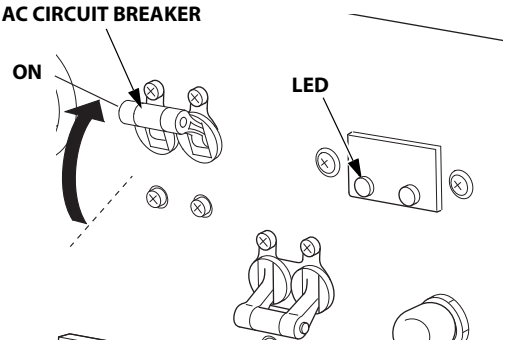

During generator use, if the AC circuit breaker trips, this usually indicates a faulty power tool, appliance, or cord.

If that occurs, perform test steps 1 through 5 to verify that the GFCI and AC circuit breaker are in proper working order. If the GFCI and AC circuit breaker do test correctly, then the fault is likely to be in the power tool, appliance, or cord. Repair or replace the faulty power tool, appliance, or cord before further use.

GFCI System ②
(120V-20A Duplex Receptacle)

1. Unplug all tools and appliances from the generator.
2. Start the engine (see page 47).
3. Turn OFF the auto throttle switch (see page 49).
4. Turn the AC circuit breaker to the ON position. When the GFCI is operating normally, the GFCI indicator will continuously light green.

   Light order:
   (red) Blink once → (green) Lights continuously

   - If the green GFCI indicator does not light on, press the GFCI RESET button.
   - If the red GFCI indicator starts to blink continuously, contact an authorized Honda Power Equipment dealer.

5. Press the GFCI TEST button:

   - The GFCI RESET button will pop out and the green GFCI indicator will go off.
   - If the GFCI does not function as described, contact an authorized Honda Power Equipment dealer.

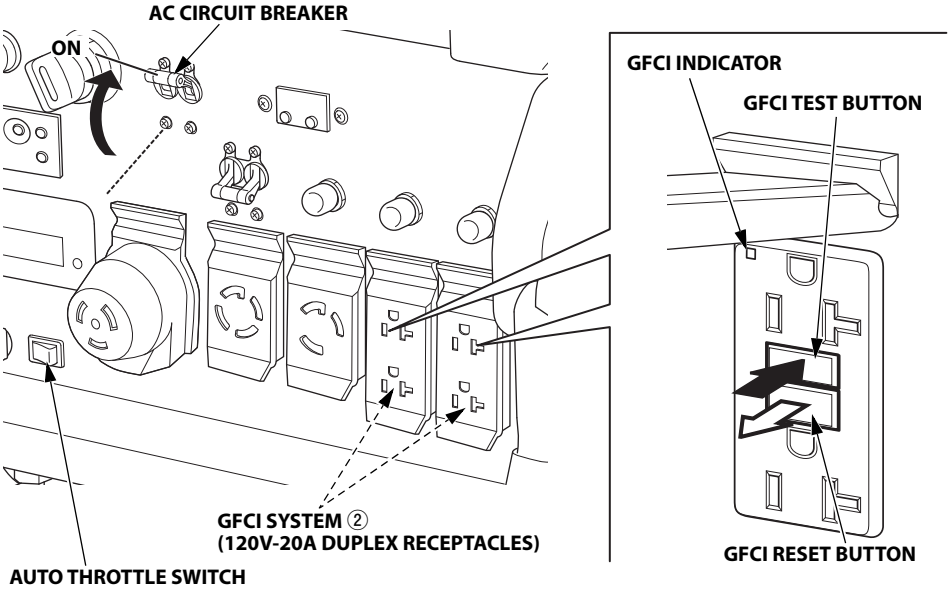

6. Press the GFCI RESET button:

- The green GFCI indicator will light continuously.
- If the red GFCI indicator starts to blink continuously, contact an authorized Honda Power Equipment dealer.

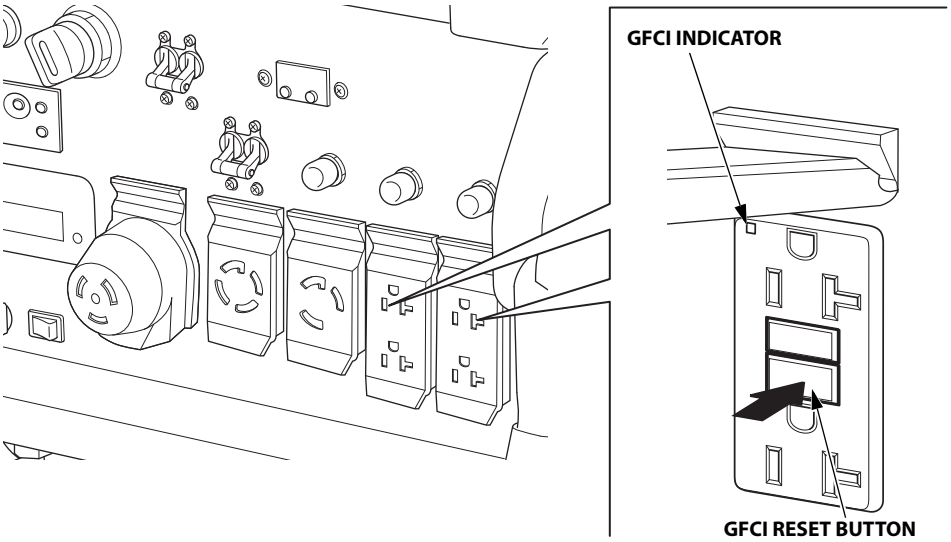

When the GFCI RESET button pops out or the green GFCI indicator does not lit during operation:

- Unplug all appliances from the GFCI protected receptacle.
- Press the GFCI RESET button.
  - If the GFCI cannot be reset, the GFCI is faulty. Contact an authorized Honda Power Equipment dealer.
  - If the GFCI RESET button extends, this usually indicates a faulty power tool, appliance, or cord. If that occurs, perform operation check steps 1 through 6 to verify that the GFCI is in proper working order. If the GFCI tests correctly, then the fault is likely to be in the power tool, appliance, or cord. Repair or replace the faulty power tool, appliance, or cord before further use.

AC OPERATION

If an appliance begins to operate abnormally, becomes sluggish, or stops suddenly, turn it off immediately. Disconnect the appliance, and determine whether the problem is in the appliance or the rated load capacity of the generator has been exceeded.

NOTICE

Substantial overloading may damage the generator. Marginal overloading may shorten the service life of the generator.

1. Start the engine (see page 47).
2. Switch ON the AC circuit breaker.
3. Plug in the appliance.
4. Most motorized appliances require more than their rated wattage for startup.
5. Turn on the appliance.

Do not exceed the current limit specified for any of the receptacles.
If an overloaded circuit causes the AC circuit breaker or AC circuit protector to switch OFF, reduce the electrical load on the circuit, wait a few minutes and then reset the AC circuit breaker or AC circuit protector.

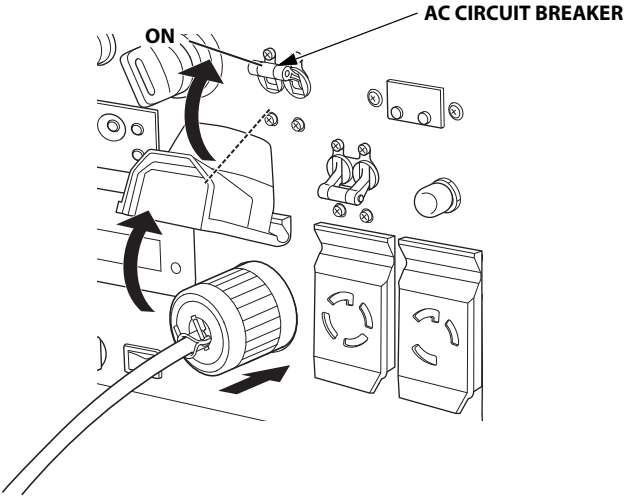

OPERATION

Before connecting an appliance to the generator, make sure that it is in good order and that its electrical rating does not exceed that of the generator. Then start the generator and connect the appliance power cord.

AC Applications
Before connecting an appliance or power cord to the generator:

- Make sure that it is in good working order. Faulty appliances or power cords can create a potential for electrical shock.
- If an appliance begins to operate abnormally, becomes sluggish, or stops suddenly, turn it off immediately. Disconnect the appliance, and determine whether the problem is the appliance or the rated load capacity of the generator has been exceeded.

Most appliance motors require more than their rated wattage for startup. Make sure the electrical rating of the tool or appliance does not exceed the maximum power rating of the generator.

Maximum power is:

10.0 kVA

For continuous operation, do not exceed the rated power.
Rated power is:

9.0 kVA

In either case, the total power requirements (VA) of all appliances connected must be considered. Appliance and power tool manufacturers usually list rating information near the model number or serial number.

NOTICE

Substantial overloading will open the circuit breaker. Slightly overloading the generator may not switch the circuit breaker OFF, but will shorten the service life of the generator.

AUTO THROTTLE® SYSTEM

With the switch in the ON position, engine speed is automatically reduced when ALL loads are turned OFF or disconnected. When appliances are turned ON or reconnected, the engine returns to rated speed. In the OFF position, the Auto Throttle® system does not operate. The Auto Throttle system will not respond to electrical loads of less than 1 ampere or intermittent loads such as a staple gun. Turn the Auto Throttle switch to the OFF position to operate loads of less than 1 amp.

Appliances with large start-up power demands may not allow the engine to reach normal operating rpm when they are connected to the generator. Push the Auto Throttle switch to the OFF position and connect the appliance to the generator. If the engine still will not reach normal operating speed, check that the appliance does not exceed the rated load capacity of the generator.

To avoid extended warm-up periods, keep the Auto Throttle switch OFF until the engine reaches operating temperature.

The Auto Throttle system is not effective for use with appliances that require only momentary power. If the tool or appliance will be turned ON and OFF quickly, the Auto Throttle switch should be in the OFF position.

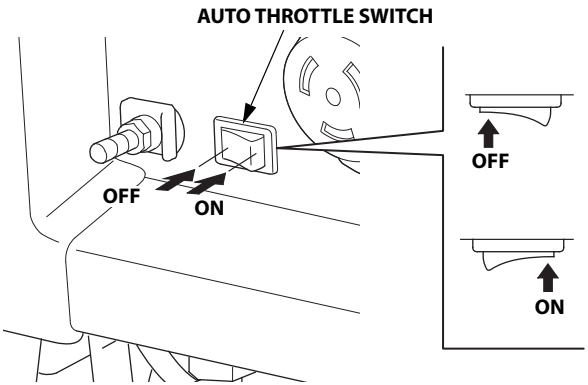

STANDBY POWER

Connections to a Building's Electrical System

Connections for standby power to a building's electrical system must be made by a qualified electrician. The connection must isolate the generator power from utility power, and must comply with all applicable laws and electrical codes.

⚠ WARNING

Improper connections to a building's electrical system can allow current from the generator to backfeed into the utility lines.

Such backfeed may electrocute utility company workers or others who contact the lines during a power outage, and the generator may explode, burn, or cause fires when utility power is restored.

Consult the utility company or a qualified electrician prior to making any power connections.

In some areas, generators are required by law to be registered with local utility companies. Check local regulations for proper registration and use procedures.

System Ground

This generator has a system ground that connects generator frame components to ground terminals in the AC output receptacles. The system ground is connected to the AC neutral wire.

Special Requirements

There may be Federal or State Occupational Safety and Health Administration (OSHA) regulations, local codes, or ordinances that apply to the intended use of the generator. Please consult a qualified electrician, electrical inspector, or the local agency having jurisdiction.

- In some areas, generators are required to be registered with local utility companies.
- If the generator is used at a construction site, there may be additional regulations that must be observed.

SERVICING YOUR GENERATOR

THE IMPORTANCE OF MAINTENANCE

Good maintenance is essential for safe, economical, and trouble-free operation. It will also help reduce air pollution.

To help you properly care for your generator, the following pages include a maintenance schedule, routine inspection procedures, and simple maintenance procedures using basic hand tools. Other service tasks that are more difficult or require special tools are best handled by professionals and are normally performed by a Honda technician or other qualified mechanic.

The maintenance schedule applies to normal operating conditions. If you operate your generator under unusual conditions, such as sustained high-load or high-temperature operation, or use it in dusty conditions, consult your servicing dealer for recommendations applicable to your individual needs and use.

⚠ WARNING

Failure to properly maintain this generator, or failing to correct a problem before operation, could result in a significant malfunction.

Some malfunctions can cause serious injuries or death.

Always follow the inspection and maintenance recommendations and schedules in this owner's manual.

Remember that an authorized Honda Power Equipment dealer knows your generator best and is fully equipped to maintain and repair it.

To ensure the best quality and reliability, use only new, Honda Genuine parts or their equivalents for repair and replacement.

Maintenance, replacement, or repair of the emission control devices and systems may be performed by any engine repair establishment or individual, using parts that are "certified" to EPA standards.

MAINTENANCE SAFETY

Some of the most important safety precautions follow. However, we cannot warn you of every conceivable hazard that can arise in performing maintenance. Only you can decide whether or not you should perform a given task.

⚠ WARNING

Improper maintenance can cause an unsafe condition.

Failure to properly follow maintenance instructions and precautions can cause serious injuries or death.

Always follow the procedures and precautions in this owner's manual.

Safety Precautions
Read the instructions before you begin, and make sure you have the tools and skills required.

- Make sure the engine is off before you begin any maintenance or repairs. This will eliminate several potential hazards:
  - **Carbon monoxide poisoning from engine exhaust**
    Operate outside away from open windows or doors with engine exhaust directed away from occupied structures.
  - **Burns from hot parts**
    Let the engine and exhaust system cool before touching.
  - **Injury from moving parts**
    Do not run the engine unless instructed to do so.
- To reduce the possibility of fire or explosion, be careful when working around gasoline. Use only a non-flammable solvent, not gasoline, to clean parts. Keep cigarettes, sparks, and flames away from all fuel-related parts.

MAINTENANCE SCHEDULE

Failure to follow this maintenance schedule could result in non-warrantable failures.

REGULAR SERVICE PERIOD (3) / ITEM Perform at every indicated month or operating hour interval, whichever comes first.		Each use	First month or 20 Hrs.	Every 3 months or 50 Hrs.	Every 6 months or 100 Hrs.	Every year or 300 Hrs.	Page
Engine oil	Check level	o					43
	Change		o		o		67
Engine oil filter	Replace	Every 200 Hrs. (2)					—
Air cleaner	Check	o					44
	Clean			o (1)			44, 68
	Replace					o (*)	44
Battery electrolyte	Check level	o					77
GFCI operation	Check	o					53
Canister	Check	Every 2 years (2)					—
Purge tube	Check	Every 2 years (2)					—
Charge tube	Check	Every 2 years (2)					—
Sediment cup	Clean				o		69
Spark plug	Check-adjust				o		71
	Replace					o	
Spark arrester	Clean				o		73
Valve clearance	Check-adjust					o (2)	—
Combustion chamber	Clean	After every 1,000 Hrs. (2)					—
Fuel tank and filter	Clean				o (2)		—
Fuel tube	Check	Every 2 years (Replace if necessary) (2)					—

(*)Replace paper element type only.

(1) Service more frequently when used in dusty areas.

(2) These items should be serviced by your servicing dealer, unless you have the proper tools and are mechanically proficient. Refer to the Honda shop manual for service procedures.
See "Honda PUBLICATIONS" on page 100 for ordering information.

(3) For commercial use, log hours of operation to determine proper maintenance intervals.

ENGINE OIL CHANGE

Drain the oil while the engine is warm to assure rapid and complete draining.

1. Place a suitable container below the engine to catch the used oil.
2. Open the maintenance cover to access the oil filler cap.
3. Remove the oil filler cap, oil drain bolt and sealing washer, and drain the oil into the container.

   NOTICE

   Improper disposal of engine oil can be harmful to the environment.
   If you change your own oil, please dispose of the used oil properly. Put it in a sealed container, and take it to a recycling center. Do not discard it in a trash bin, dump it on the ground, or pour it down the drain.

4. Install a new sealing washer and the oil drain bolt, and tighten the bolt securely.

   Torque: 32.5 lbf·ft (44.1 N·m, 4.5 kgf·m)

5. If it is difficult to fill the engine with oil, set the funnel contained in the generator package to the oil filler port, and pour oil. Refill to the upper limit mark on the dipstick with the recommended oil (see page 17).

   Maximum oil capacity:
   Without oil filter replacement: approximately 1.6 US qt (1.5 L)
   With oil filter replacement: approximately 1.8 US qt (1.7 L)

6. Tighten the oil filler cap securely. Close the maintenance cover.

Wash your hands with soap and water after handling used oil.

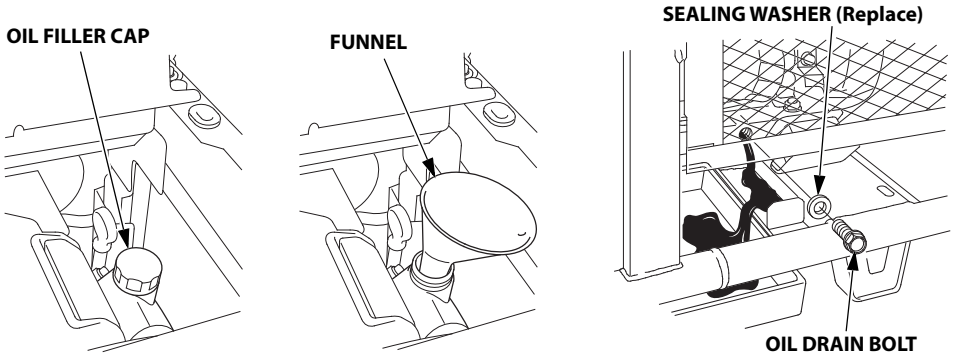

AIR CLEANER SERVICE

Foam Air Filter Cleaning

A dirty foam air filter will restrict air flow to the carburetor, reducing engine performance. If you operate the generator in very dusty areas, clean the foam air filter more frequently than specified in the Maintenance Schedule.

1. Clean the foam air filter in warm soapy water, rinse, and allow to dry thoroughly, or clean in non-flammable solvent and allow to dry.

2. Dip the foam air filter in clean engine oil, and then squeeze out all excess oil. The engine will smoke when started if too much oil is left in the filter.

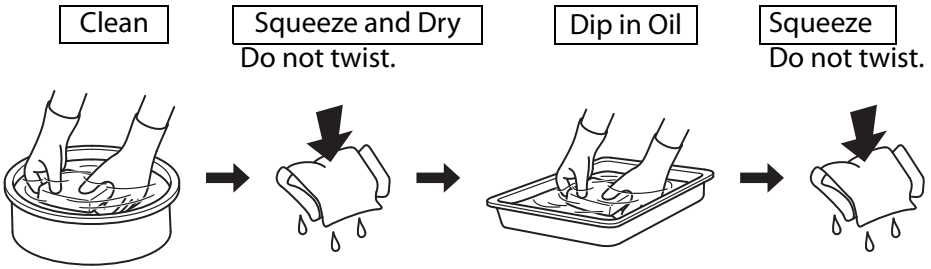

3. Wipe dirt from the air cleaner housing and cover using a moist rag. Be careful to prevent dirt from entering the air duct that leads to the carburetor.

SEDIMENT CUP CLEANING

The sediment cup prevents water that may be in the fuel tank from entering the carburetor. If the engine has not been run for a long time, the sediment cup should be cleaned.

⚠ WARNING

Gasoline is highly flammable and explosive.

You can be burned or seriously injured when handling fuel.

- Stop the engine and let it cool before handling fuel.
- Keep heat, sparks, and flame away.
- Handle fuel only outdoors.
- Keep away from your vehicle.
- Wipe up spills immediately.

1. Turn the engine switch to the OFF position.

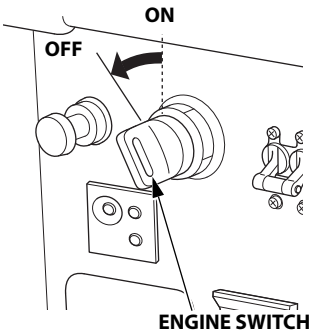

2. Turn the fuel valve lever to the OFF position.

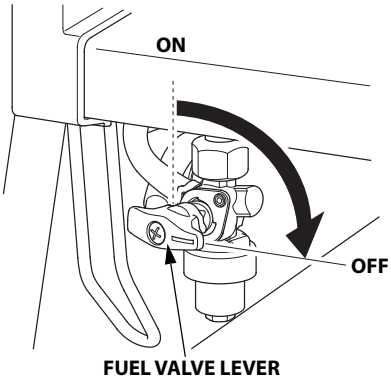

3. Unscrew the sediment cup.

4. Clean the sediment cup in non-flammable or high flash point solvent.

5. Install the sediment cup and a new O-ring.

6. Turn the fuel valve to the ON position and check for leaks.

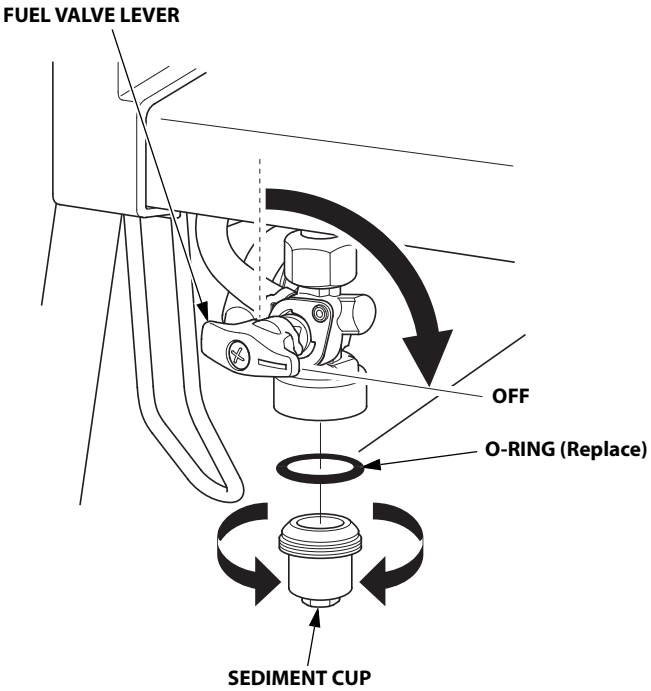

SPARK PLUG SERVICE

In order to service the spark plug, you will need a spark plug wrench (commercially available).

Required spark plug: ZFR5F (NGK)

To ensure proper engine operation, the spark plug must be properly gapped and free of deposits.

NOTICE

An incorrect spark plug can cause engine damage.

If the engine is hot, allow it to cool before servicing the spark plugs.

1. Remove the four 6 mm flange bolts, and remove the cover.

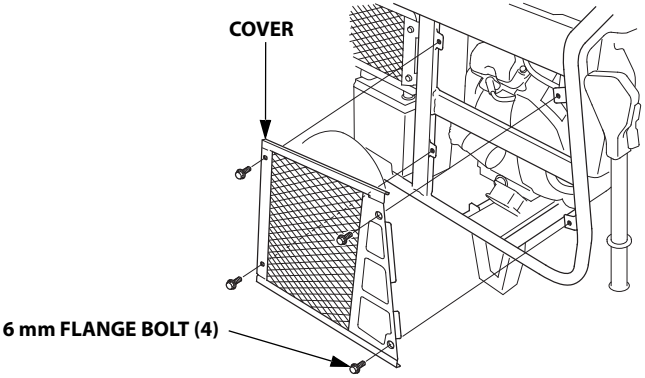

2. Disconnect the spark plug caps, and remove any dirt from around the spark plugs area.

3. Remove the spark plugs with a spark plug wrench.

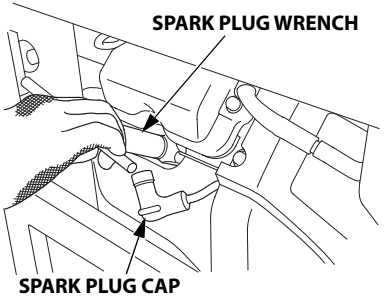

4. Inspect the spark plug. Replace it if the electrodes are worn or fouled, or if the insulator is cracked or chipped. Clean the spark plug with a wire brush if it is to be reused.

5. Measure the spark plug electrode gap with a wire-type feeler gauge. Correct the gap, if necessary, by carefully bending the side electrode.

   Spark plug gap:
   0.028–0.031 in (0.7–0.8 mm)

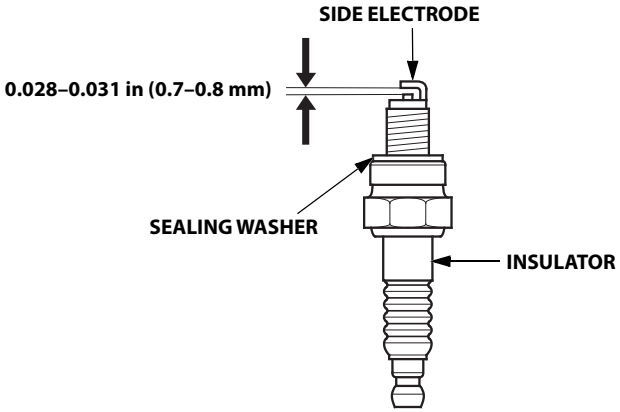

6. Make sure that the spark plug sealing washer is in good condition, and thread the spark plug in by hand to prevent cross-threading.

7. After the spark plug is seated, tighten with a spark plug wrench to compress the washer.
   If reinstalling a used spark plug, tighten 1/8–1/4 turn after the spark plug is seated.
   If installing a new spark plug, tighten 1/2 turn after the spark plug is seated.

   Torque: 13.0 lbf·ft (17.7 N·m, 1.8 kgf·m)

   NOTICE
   A loose spark plug can overheat and damage the engine.
   Overtightening the spark plug can damage the threads in the cylinder head.

8. Reinstall the spark plug caps securely.

9. Install the cover in the reverse order of removal.

SPARK ARRESTER SERVICE

The spark arrester must be serviced every 100 hours to keep it functioning as designed.

If the engine has been running, the muffler will be very hot. Allow the muffler to cool before servicing the spark arrester.

1. Remove the four 6 mm flange bolts, and remove the muffler protector.

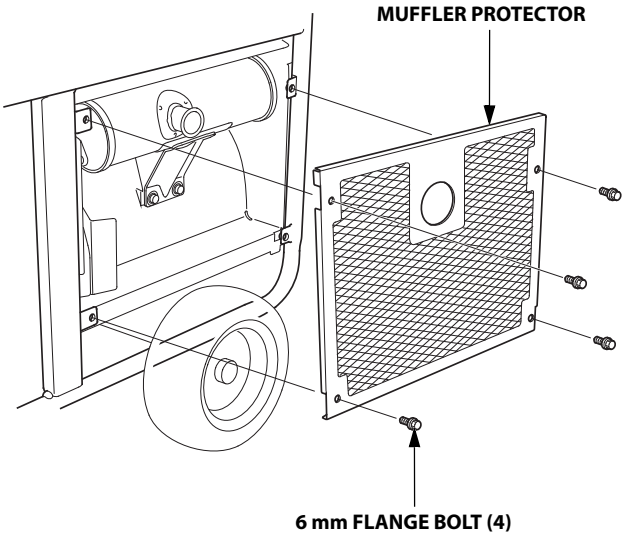

2. Remove the 4 mm self-tapping screw, and remove the spark arrester.

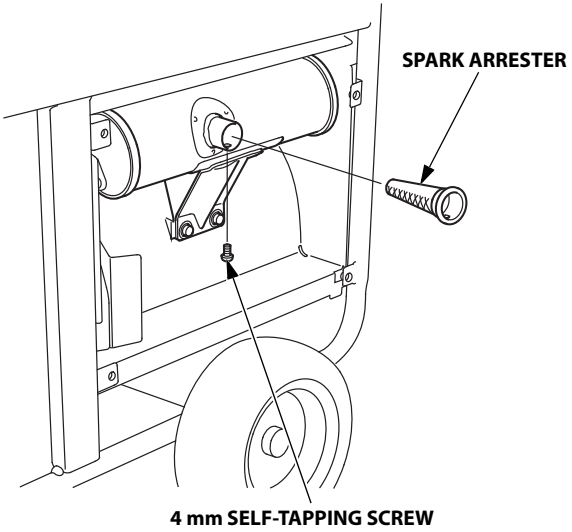

3. Use a brush to remove carbon deposits from the spark arrester screen.
   Be careful to avoid damaging the screen.
   The spark arrester must be free of breaks and tears. Replace the spark arrester if it is damaged.

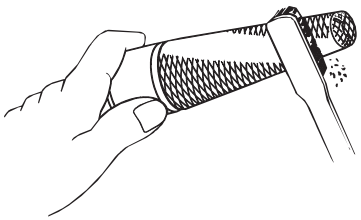

4. Install the spark arrester in the reverse order of removal.

   Torque: 1.6 lbf·ft (2.2 N·m, 0.22 kgf·m)

5. Install the muffler protector in the reverse order of removal.

BATTERY SERVICE

Your generator's engine charging system charges the battery while the engine is running. However, if the generator is only used periodically, the battery must be charged monthly to maintain the battery service life.

⚠ WARNING

The battery contains sulfuric acid (electrolyte), which is highly corrosive and poisonous.

Getting electrolyte in your eyes or on your skin can cause serious burns.

Wear protective clothing and eye protection when working near the battery.

Emergency Procedures

Eyes – Wash your eye(s) with plenty of water avoiding damaging your eye(s) with water pressure. Call your local Poison Center or a doctor immediately.

Skin – Remove contaminated clothing. Wash the skin with large quantities of water. Call your local Poison Center or a doctor immediately.

Swallowing – Wash mouth with a large amount of water and drink a cup of water. Call your local Poison Center or a doctor immediately.

⚠ WARNING

The battery gives off explosive hydrogen gas during normal operation.

A spark or flame can cause the battery to explode with enough force to kill or seriously hurt you.

Wear protective clothing and a face shield, or have a skilled mechanic perform the battery maintenance.

Battery Inspection

The electrolyte level must be kept between the UPPER and LOWER level marks. If the electrolyte level is below the LOWER level, sulfation and battery plate damage will occur.

If rapid loss of electrolyte is experienced, or if your battery seems to be weak causing slow operation of the starter motor, see your authorized Honda Power Equipment dealer.

1. Locate the battery. Check the electrolyte level with the generator on a level surface. Remove the battery cell caps.

2. Inspect the electrolyte level of each cell.
   The electrolyte level must be kept between the UPPER and LOWER level marks, and electrolyte liquid should cover all the plates.

3. If any plates are not covered, remove the battery and add distilled water as necessary.

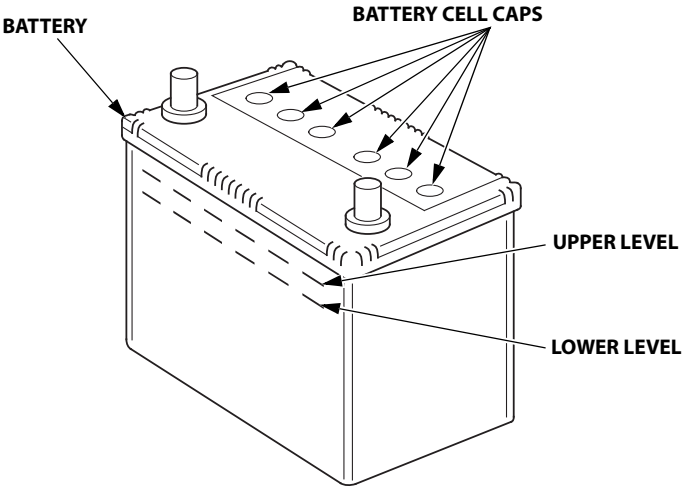

Battery Removal

WARNING: Battery posts, terminals, and related accessories contain lead and lead compounds. **Wash your hands after handling.**

1. Remove the four 6 mm flange bolts, and remove the cover.

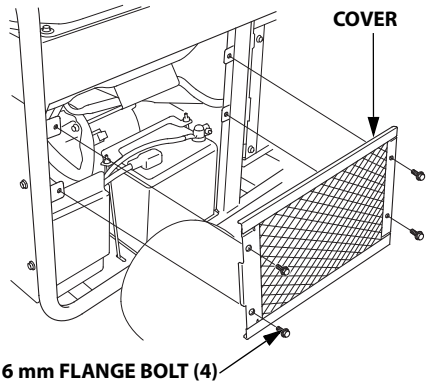

2. Remove the negative (–) cable from the battery negative (–) terminal first, and then remove the positive (+) cable from the battery positive (+) terminal.

3. Remove the flange nuts, and remove the battery set plate.

4. Remove the battery from the battery tray.

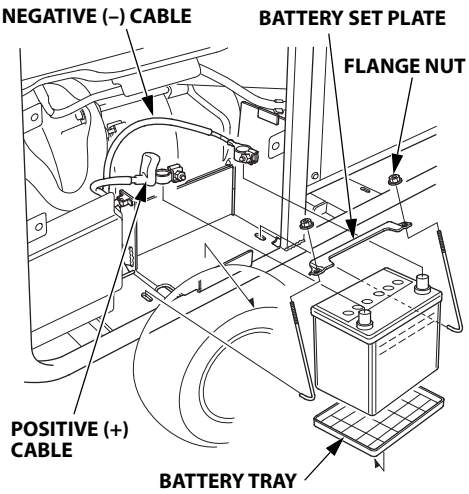



This symbol on the battery means that this product must not be treated as household waste.

NOTICE

An improperly disposed of battery can be harmful to the environment and human health.
Always confirm local regulations for battery disposal.

Battery Charging
The battery is rated at 28.0 Ah (ampere hours). Charging current should equal 10% of the battery's ampere hour rating.

Battery: 12 V 28.0 Ah (5 HR)

1. Connect the battery charger following the manufacturer's instructions.
2. Charge the battery.
3. Clean the outside of the battery and the battery compartment with a solution of baking soda and water.

Battery Installation
1. Install the battery into the generator.
2. Install the battery set plate and tighten the flange nuts.
3. Connect the battery positive (+) cable to the battery positive (+) terminal first, and tighten the bolt securely.
4. Slide the battery boot over the positive (+) cable and terminal.
5. Connect the battery negative (–) cable to the battery negative (–) terminal, and tighten the bolt securely.
6. Install the cover in the reverse order of removal.

FUSE

If the fuse is blown, the starter motor won't operate.

In the event of fuse failure, locate the cause of failure and repair it before you continue operation. If the fuse continues to fail, discontinue generator use and consult an authorized Honda Power Equipment dealer.

1. Turn the engine switch to the OFF position and remove the key before checking or replacing the fuse.

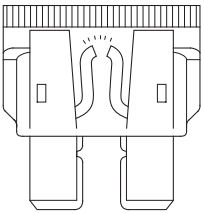

BLOWN FUSE

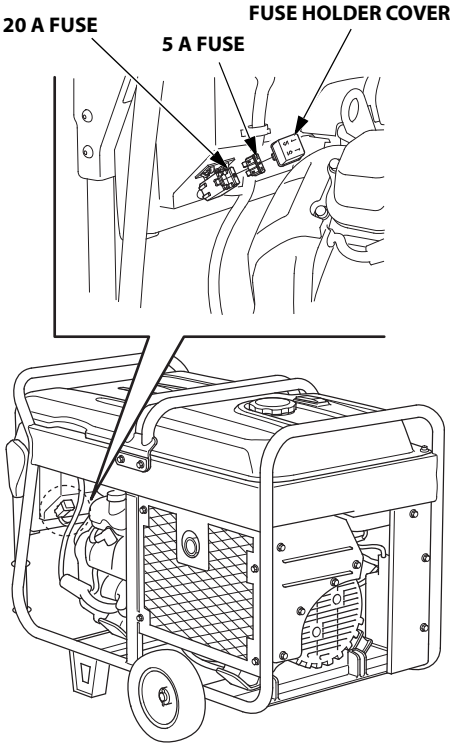

2. Remove the fuse holder cover and pull the fuse out.

3. Replace the fuse with a fuse of the same type and rating.

   Specified fuse: 5 A, 20 A

   NOTICE

   Never use a fuse with a different rating from that specified. Serious damage to the electrical system or fire may result.

4. Install the fuse holder cover in the reverse order of removal.

STORAGE

STORAGE PREPARATION

Proper storage preparation is essential for keeping your generator trouble-free and looking good. The following steps will help to keep rust and corrosion from impairing your generator's function and appearance, and will make the engine easier to start when you use the generator again.

Cleaning

Wipe the generator with a moist cloth. After the generator has dried, touch up any damaged paint, and coat other areas that may rust with a light film of oil.

Fuel

NOTICE

Depending on the region where you operate your equipment, fuel formulations may deteriorate and oxidize rapidly. Fuel deterioration and oxidation can occur in as little as 30 days and may cause damage to the carburetor and/or fuel system. Please check with your servicing dealer for local storage recommendations.

Gasoline will oxidize and deteriorate in storage. Old gasoline will cause hard starting, and it leaves gum deposits that clog the fuel system. If the gasoline in your generator deteriorates during storage, you may need to have the carburetor and other fuel system components serviced or replaced.
The length of time that gasoline can be left in your fuel tank and carburetor without causing functional problems will vary with such factors as gasoline blend, your storage temperatures, and whether the fuel tank is partly or completely filled. The air in a partly filled fuel tank promotes fuel deterioration. Very warm storage temperatures accelerate fuel deterioration. Fuel deterioration problems may occur within a few months, or even less if the gasoline was not fresh when you filled the fuel tank.

The *Distributor's Limited Warranty* does not cover fuel system damage or engine performance problems resulting from neglected storage preparation.
You can extend fuel storage life by adding a gasoline stabilizer that is formulated for that purpose, or you can avoid fuel deterioration problems by draining the carburetor, sediment cup, and/or fuel tank.

STORAGE

Service according to the table below:

STORAGE TIME	RECOMMENDED SERVICE PROCEDURE TO PREVENT HARD STARTING
Less than 1 month	No preparation required
1 to 2 months	Fill with fresh gasoline and add gasoline stabilizer*.
2 months to 1 year	Fill with fresh gasoline and add gasoline stabilizer*. Drain the carburetor float bowl (see page 83). Drain the fuel sediment cup (see page 69).
1 year or more	Fill with fresh gasoline and add gasoline stabilizer*. Drain the carburetor float bowl (see page 83). Drain the fuel sediment cup (see page 69). Remove the spark plug. Put a teaspoon of engine oil into each cylinder. Turn the engine for a few seconds by turning the engine switch to the START position to distribute the oil in the cylinders. Reinstall the spark plug. Change the engine oil (see page 67). After removal from storage, drain the stored gasoline into a suitable container, and fill with fresh gasoline before starting.

* Use gasoline stabilizers that are formulated to extend storage life. Follow the manufacturer's instructions for use.
Contact your authorized Honda Power Equipment dealer for stabilizer recommendations.

DRAINING THE FUEL TANK AND CARBURETOR

⚠ WARNING

Gasoline is highly flammable and explosive.

You can be burned or seriously injured when handling fuel.

- Stop the engine and let it cool before handling fuel.
- Keep heat, sparks, and flame away.
- Handle fuel only outdoors.
- Keep away from your vehicle.
- Wipe up spills immediately.

1. Unscrew the fuel tank cap, remove the fuel strainer, and empty the fuel tank into an approved gasoline container. We recommend using a commercially available gasoline hand pump to empty the tank. Do not use an electric pump. Reinstall the fuel strainer and the fuel tank cap.

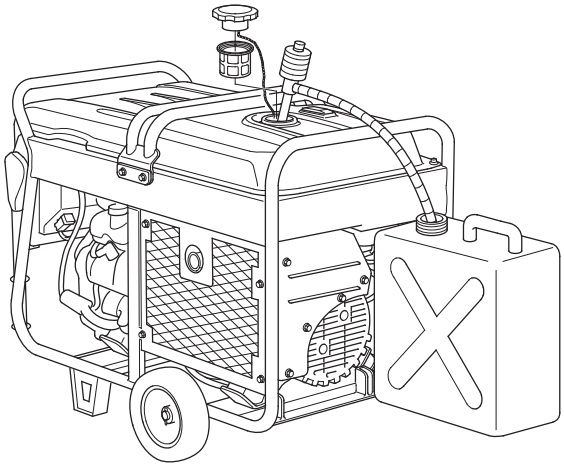

2. Pull out the carburetor drain tube end under the fan cover of the engine, and place it in a suitable container.

3. Remove the air cleaner cover (see page 44).

4. Loosen the carburetor drain screw.
   If the drain screw is difficult to loosen, wrap duct tape around the screwdriver stem until the diameter becomes 8 mm as illustrated. By doing so, the screwdriver is easily inserted into the cutout portion of the drain bolt, and you can loosen the drain bolt easily.

5. Drain the gasoline from the carburetor into the container.

6. Tighten the carburetor drain screw securely.

7. Install the air cleaner cover (see page 44).

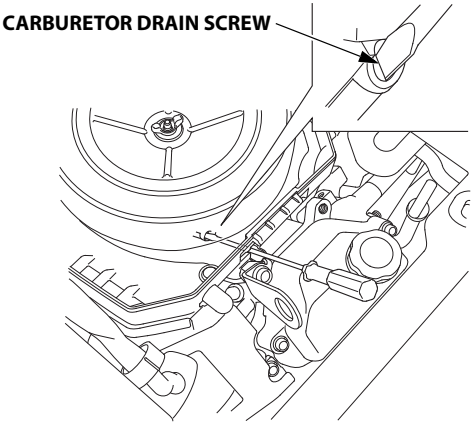

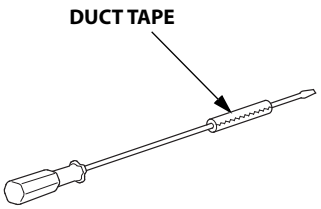

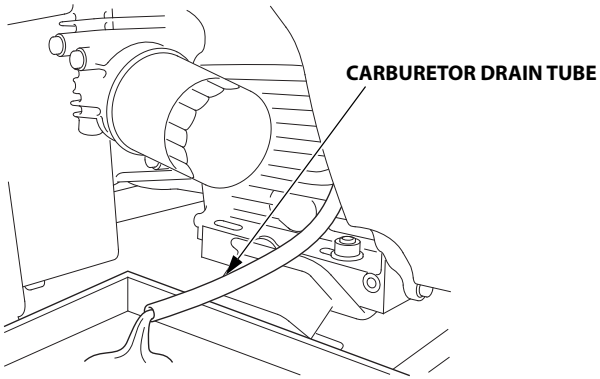

Engine Oil
Change the engine oil (see page 67).

Engine Cylinder
1. Remove the spark plugs (see page 71).
2. Pour a teaspoon (5 cc) of clean engine oil into each cylinder.
3. Turn the engine for a few seconds by turning the engine switch to the START position to distribute the oil in the cylinders.
4. Reinstall the spark plugs (see page 72).
5. Remove the battery and store it in a cool, dry place. Recharge it once a month.
6. Cover the generator to keep out dust.

STORAGE

STORAGE PRECAUTIONS

If your generator will be stored with gasoline in the fuel tank and carburetor, it is important to reduce the hazard of gasoline vapor ignition.

Select a well ventilated storage area away from any appliance that operates with a flame, such as a furnace, water heater, or clothes dryer.
Also avoid any area with a spark-producing electric motor, or where power tools are operated.

If possible, avoid storage areas with high humidity, because that promotes rust and corrosion.

Unless all fuel has been drained from the fuel tank, leave the fuel valve in the OFF position to reduce the possibility of leakage.

Place the generator on a level surface. Tilting can cause fuel or oil leakage.

With the engine and exhaust system cool, cover the generator to keep out dust. A hot engine and exhaust system can ignite or melt some materials.

Do not use a plastic sheet as a dust cover. A nonporous cover will trap moisture around the generator, promoting rust and corrosion.

REMOVAL FROM STORAGE

Check your generator as described in the "BEFORE OPERATION" chapter of this manual (see page 40).

If the generator was stored for 1 year or longer, drain the fuel tank (see page 83) and refuel with fresh gasoline. If you keep a container of gasoline for refueling, be sure that it contains only fresh gasoline. Gasoline oxidizes and deteriorates over time, causing hard starting.

If the cylinder was coated with oil during storage preparation, the engine may smoke briefly at startup. This is normal.

TRANSPORTING

⚠ CAUTION

An engine that has been running will remain very hot for a period of time.

A hot engine and exhaust system can burn you and ignite some material.

If the generator has been used, allow it to cool for at least 15 minutes before loading the generator on the transport vehicle.

To prevent spillage when transporting, the generator should be secured upright in its normal operating position, with the fuel valve OFF.

NOTICE

Do not lay the generator on its side when moving, storing, or operating it. Oil or fuel may leak and damage the engine or your property.

Do not operate the generator while it is being transported or while it is mounted to any type of vehicle, trailer, or boat.

Take care not to drop or strike the generator when transporting. Do not place heavy objects on the generator.

When using ropes or tie-down straps to secure the generator for transportation, be sure to only use the frame bars as attachment points. Do not fasten ropes or straps to any portions of the generator body or handle bar.

TRANSPORTING

To lift the generator

Lift the generator by the lifting hanger. Do not try to lift the generator by and other part.

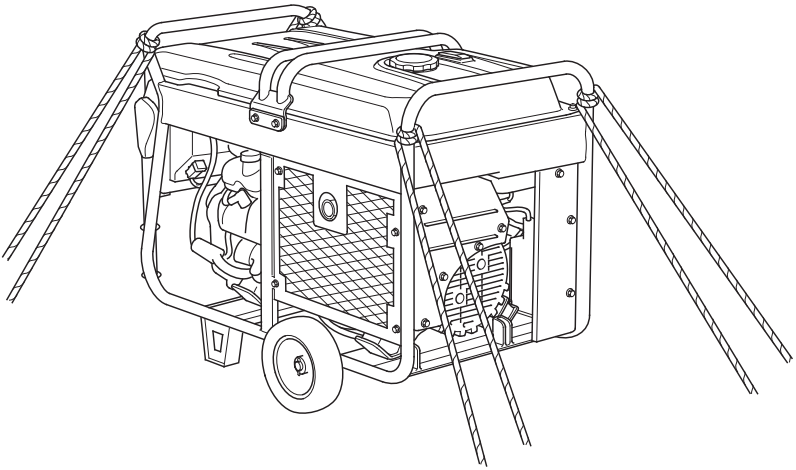

TAKING CARE OF UNEXPECTED PROBLEMS

ENGINE WILL NOT START

Possible Cause	Correction
Fuel valve lever OFF.	Turn lever ON (see page 48).
Engine switch OFF.	Turn engine switch to ON (see page 49).
Choke OPEN.	Move to CLOSED unless engine is warm.
Out of fuel.	Refuel (see page 19).
Bad fuel; generator stored without treating or draining gasoline, or refueled with bad gasoline.	Drain fuel tank and carburetor (see page 83). Refuel with fresh gasoline (see page 19).
Low oil level caused Oil Alert to stop engine.	Add oil (see page 17). Turn engine switch to OFF and then restart the engine.
Spark plug faulty, fouled, or improperly gapped.	Gap or replace spark plug (see page 71).
Spark plug wet with fuel (flooded engine).	Dry and reinstall spark plug.
Fuel strainer restricted, carburetor malfunction, ignition malfunction, valves stuck, etc.	Take the generator to an authorized Honda Power Equipment dealer, or refer to the shop manual.
CO-MINDER (CO Shut-off System) is detecting high carbon monoxide (CO) levels around the generator.	Review the location of the generator, and place it in a well-ventilated outdoor location (see page 25). When the engine is stopped automatically by CO-MINDER, press the CO-MINDER reset button to restart the engine (see page 52).

ENGINE LACKS POWER

Possible Cause	Correction
Air filter restricted.	Clean or replace air filter (see pages 44, 68).
Bad fuel; generator stored without treating or draining gasoline, or refueled with bad gasoline.	Drain fuel tank and carburetor (see page 83). Refuel with fresh gasoline (see page 19).
Fuel strainer restricted, carburetor malfunction, ignition malfunction, valves stuck, etc.	Take the generator to an authorized Honda Power Equipment dealer, or refer to the shop manual.

NO POWER AT THE AC RECEPTACLES

Possible Cause	Correction
AC circuit breaker left in the OFF position after starting.	Check AC load and reset AC circuit breaker (see page 59).
GFCI system activated.	• GFCI system ①: Test GFCI and reset AC circuit breaker (see page 54). • GFCI system ②: Test GFCI and press the GFCI RESET button (see page 56). • Replace or repair power tool or appliance.
AC circuit protector tripped.	Check AC load and reset circuit protector (see page 27).
Faulty power tool or appliance.	Replace or repair power tool or appliance. Stop and restart the engine.
Faulty generator.	Take the generator to an authorized Honda Power Equipment dealer, or refer to the shop manual.

ENGINE AUTOMATICALLY STOP AND THE CO ALARM INDICATOR FLASHING

Possible Cause	Correction
CO concentration around the generator is high.	Review the location of the generator, and place it in a well-ventilated outdoor location (see page 25). When the engine is stopped automatically by CO-MINDER, press the CO-MINDER reset button to restart the engine (see page 52).

ENGINE AUTOMATICALLY STOP AND THE FAULT/CO SENSOR LIFE INDICATOR FLASHING

Possible Cause	Correction
CO sensor malfunction.	If the engine cannot be started and the CO ALARM indicator flashes, even if the location of the generator has changed, there may be a CO-MINDER malfunction. Consult an authorized Honda Power Equipment dealer.
CO sensor may have reached the end of its useful lifespan (see page 26).	Consult an authorized Honda Power Equipment dealer.

FAULT/CO SENSOR LIFE INDICATOR FLASHING WHEN RUNNING THE ENGINE

Possible Cause	Correction
CO sensor may reach the end of its useful lifespan (see page 26).	Consult an authorized Honda Power Equipment dealer for replacement.

TECHNICAL INFORMATION

SERIAL NUMBER LOCATION

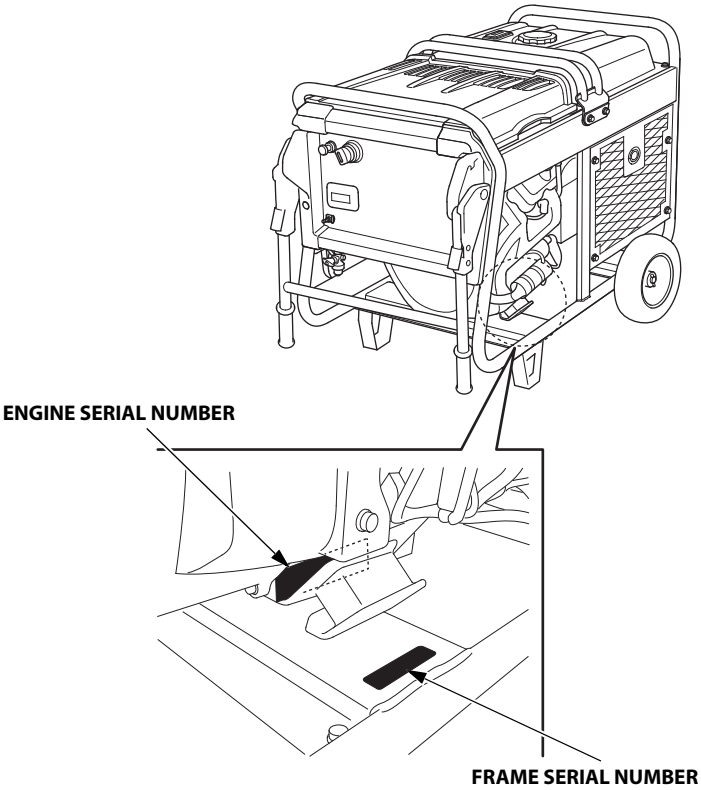

Record the engine and frame serial numbers and date purchased in the spaces below. You will need this serial number when ordering parts, and when making technical or warranty inquiries.

Engine serial number: _____

Frame serial number: _____

Date purchased: _____

CARBURETOR MODIFICATION FOR HIGH ALTITUDE OPERATION

At high altitude, the standard carburetor air-fuel mixture will be too rich. Performance will decrease, and fuel consumption will increase. A very rich mixture will also foul the spark plug and cause hard starting. Operation at an altitude that differs from that at which this engine was certified, for extended periods of time, may increase emissions.

High altitude performance can be improved by specific modifications to the carburetor. If you always operate your generator at altitudes above 2,000 feet (610 meters), have your authorized Honda servicing dealer perform this carburetor modification. This engine, when operated at high altitude with the carburetor modifications for high altitude use, will meet each emission standard throughout its useful life.

Even with carburetor modification, engine horsepower will decrease about 3.5% for each 1,000-foot (300-meter) increase in altitude. The effect of altitude on horsepower will be greater than this if no carburetor modification is made.

NOTICE

When the carburetor has been modified for high altitude operation, the air/fuel mixture will be too lean for low altitude use. Operation at altitudes below 2,000 feet (610 meters) with a modified carburetor may cause the engine to overheat and result in serious engine damage. For use at low altitudes, have your servicing dealer return the carburetor to original factory specifications.

EMISSION CONTROL SYSTEM INFORMATION

Source of Emissions

The combustion process produces carbon monoxide, oxides of nitrogen, and hydrocarbons. Control of hydrocarbons and oxides of nitrogen is very important because, under certain conditions, they react to form photochemical smog when subjected to sunlight. Carbon monoxide does not react in the same way, but it is toxic.

Honda utilizes appropriate air/fuel ratios and other emissions control systems to reduce the emissions of carbon monoxide, oxides of nitrogen, and hydrocarbons.

Additionally, Honda fuel systems utilize components and control technologies to reduce evaporative emissions.

The U.S. and California Clean Air Acts, and Environment and Climate Change Canada (ECCC)

U.S. EPA, California and Canadian regulations require all manufacturers to furnish written instructions describing the operation and maintenance of emission control systems.

The following instructions and procedures must be followed in order to keep the emissions from your Honda engine within the emission standards.

Tampering and Altering

NOTICE

Tampering is a violation of federal and California law.

Tampering with or altering the emission control system may increase emissions beyond the legal limit. Among those acts that constitute tampering are:

- Removal or alteration of any part of intake, fuel, or exhaust systems.
- Alterations that would cause the engine to operate outside its design parameters.

Problems That May Affect Emissions
If you are aware of any of the following symptoms, have your engine inspected and repaired by your authorized Honda Power Equipment dealer.

- Hard starting or stalling after starting.
- Rough idle.
- Misfiring or backfiring under load.
- Afterburning (backfiring).
- Black exhaust smoke or high fuel consumption.

Replacement Parts
The emissions control systems on your new Honda engine were designed, built, and certified to conform with EPA, California (models certified for sale in California only), and Canadian emissions regulations. We recommend the use of Honda Genuine parts whenever you have maintenance done. These original design replacement parts are manufactured to the same standards as the original parts, so you can be confident of their performance. Honda cannot deny coverage under the emission warranty solely for the use of non-Honda replacement parts or service performed at a location other than an authorized Honda dealership; you may use comparable EPA certified parts, and have service performed at non-Honda locations. However, the use of replacement parts that are not of the original design and quality may impair the effectiveness of your emissions control system.
A manufacturer of an aftermarket part assumes the responsibility that the part will not adversely affect emissions performance. The manufacturer or rebuilder of the part must certify that use of the part will not result in a failure of the engine to comply with emissions regulations.

Maintenance
As the power equipment engine owner, you are responsible for completing all required maintenance listed in your owner's manual. Honda recommends that you retain all receipts covering maintenance on your power equipment engine, but Honda cannot deny warranty coverage solely for the lack of receipts or for your failure to ensure that all scheduled maintenance has been completed. Follow the "MAINTENANCE SCHEDULE" on page 66.
Remember that this schedule is based on the assumption that your Honda engine product will be used for its designed purpose. Sustained high-load or high-temperature operation, or use in dusty conditions, will require more frequent service.

Air Index
(Models certified for sale in California)

An Air Index Information label is applied to engines certified to an emission durability time period in accordance with the requirements of the California Air Resources Board.

The bar graph is intended to provide you, our customer, the ability to compare the emissions performance of available engines. The lower the Air Index, the less pollution.

The durability description is intended to provide you with information relating to the engine's emission durability period. The descriptive term indicates the useful life period for the engine's emission control system. See your "Emission Control System Warranty" (see page 107) for additional information.

Descriptive Term	Applicable to Emission Durability Period
Moderate	50 hours (0–80 cc, inclusive) 125 hours (greater than 80 cc)
Intermediate	125 hours (0–80 cc, inclusive) 250 hours (greater than 80 cc)
Extended	300 hours (0–80 cc, inclusive) 500 hours (greater than 80 cc) 1,000 hours (225 cc and greater)

SPECIFICATIONS

Dimensions

Model	EB10000	
Type	AG	AN
Description code	EBVC	
Length [Handle in up position]	41.0 in (1,041 mm) [55.9 in (1,420 mm)]	
Width	27.7 in (703 mm)	
Height	35.1 in (891 mm)	
Dry mass [weight]	402.8 lbs (182.7 kg)	

Engine

Model	GX630H
Engine type	4-stroke, overhead valve, 2 cylinder
Displacement	42.0 cu-in (688 cm^3)
Bore×Stroke	3.07×2.83 in (78.0×72.0 mm)
Compression ratio	9.3:1
Engine speed	3,600 rpm
Cooling system	Forced air
Ignition system	CDI magneto ignition
Oil capacity	Without oil filter replacement: approximately 1.6 US qt (1.5 L) With oil filter replacement: approximately 1.8 US qt (1.7 L)
Fuel tank capacity	8.19 US gal (31.0 L)
Spark plug	ZFR5F (NGK)

Generator

Model		EB10000	
Type		AG	AN
AC output	Rated frequency	60 Hz	
	Rated voltage	120 V / 240 V	
	Rated ampere	37.5 A×2 / 37.5 A	
	Rated output	9.0 kVA	
	Maximum output	10.0 kVA	

Tuneup Specifications

ITEM	SPECIFICATION	MAINTENANCE
Spark plug gap	0.028–0.031 in (0.7–0.8 mm)	Refer to page: 72
Valve clearance (cold)	IN: 0.08±0.02 mm EX: 0.10±0.02 mm	See your authorized Honda dealer
Other specifications	No other adjustments needed.	

WIRING DIAGRAM

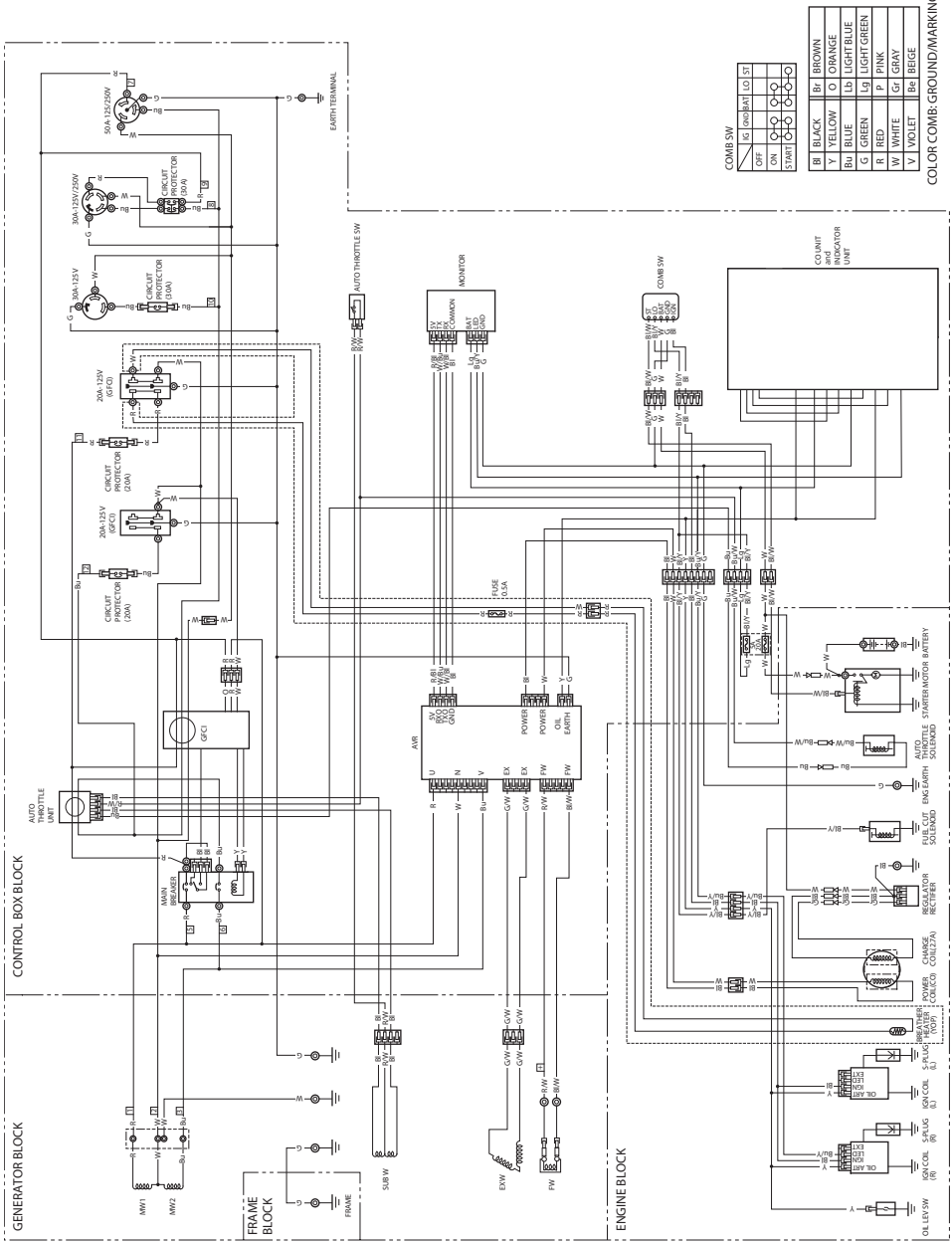

CONSUMER INFORMATION

DEALER LOCATOR INFORMATION

To find an authorized Honda Servicing Dealer anywhere in the United States:
Visit our web site:
http://powerequipment.honda.com/dealer-locator

Honda PUBLICATIONS

Shop Manual
This manual covers complete maintenance and overhaul procedures.
It is intended to be used by a skilled technician.
Available through your Honda dealer or visit
http://powerequipment.honda.com/support/shop-manuals

Parts Catalog
This manual provides complete, illustrated parts lists for your generator. Visit peparts.honda.com for free online access to the parts catalog. It is also available for purchase in paper form through your Honda dealer.

Accessories Catalog
Your authorized Honda Power Equipment dealer offers a wide selection of accessories (optional equipment) to make your generator even more useful. Visit http://powerequipment.honda.com/generators/accessories and click on See all generator accessories and Welders to see the entire catalog of accessories.

CUSTOMER SERVICE INFORMATION

Honda Power Equipment dealership personnel are trained professionals. They should be able to answer any question you may have. If you encounter a problem that your dealer does not solve to your satisfaction, please discuss it with the dealership's management.
The Service Manager or General Manager can help. Almost all problems are solved in this way.

If you are dissatisfied with the decision made by the dealership's management, contact the Honda Power Equipment Customer Relations Office. You can write to:

American Honda Motor Co., Inc.
Power Equipment Division
Customer Relations Office
4900 Marconi Drive
Alpharetta, Georgia 30005-8847

Or telephone: (770) 497-6400 M-F 9:00am - 7:30pm ET

When you write or call, please give us this information:

- Model and serial numbers (see page 92)
- Name of the dealer who sold the generator to you
- Name and address of the dealer who services your generator
- Date of purchase
- Your name, address, and telephone number
- A detailed description of the problem

Distributor's Limited Warranty

This warranty is limited to the following Honda products when distributed by American Honda Motor Co., Inc., Power Sports and Products Division, 4900 Marconi Drive, Alpharetta, Georgia 30005. **The following warranty applies to products manufactured on or after April 1, 2023.**

PRODUCTS COVERED BY THIS WARRANTY:	LENGTH OF WARRANTY: (1) (FROM DATE OF ORIGINAL RETAIL PURCHASE)	
	PRIVATE RESIDENTIAL (2)	COMMERCIAL/ RENTAL/INSTITUTIONAL
Generators	36 months	12 months
The Parts, Accessories, and Apparel warranty is on page 105		

(1) Length of Warranty: Batteries supplied with applicable products as standard, original equipment are covered by this warranty for a period of 12 months (private residential) or 3 months (commercial/rental/institutional use) from the date of original retail product purchase.

(2) Private residential: Used in maintaining owner's primary and/or secondary residence. Any other use, including but not limited to informal "for hire" use, is considered commercial/rental/institutional use.

To Qualify for This Warranty:
The product must be purchased in the United States, Puerto Rico, or the U.S. Virgin Islands from American Honda or a dealer authorized by American Honda to sell those products. This warranty applies to first retail purchaser and each subsequent owner during the applicable warranty time period, unless noted otherwise.

What American Honda Will Repair or Replace Under Warranty:
American Honda will repair or replace, at its option, any part that is proven to be defective in material or workmanship under normal use during the applicable warranty time period. Warranty repairs and replacements will be made without charge for parts or labor. Anything replaced under warranty becomes the property of American Honda Motor Co., Inc. All parts replaced under warranty will be considered as part of the original product, and any warranty on those parts will expire coincident with the original product warranty.

To Obtain Warranty Service:
You must, at your expense, take the Honda Power Equipment product, accessory, replacement part, apparel, or the power equipment on which the accessory or replacement part is installed, and proof of purchase to any Honda Power Equipment dealer in the United States, Puerto Rico, or the U.S. Virgin Islands who is authorized to sell and/or service that product, during the dealer's normal business hours. To locate a dealer near you, visit our web site at http://powerequipment.honda.com and click on Find a Dealer.
If you are unable to obtain warranty service or are dissatisfied with the warranty service you receive, contact the owner of the dealership involved; normally this will resolve the problem. However, if you should require further assistance, write or call the Power Equipment Customer Relations Department of American Honda Motor Co., Inc. at the following address:

American Honda Motor Co., Inc.
Power Equipment Customer Relations Dept.
4900 Marconi Drive
Alpharetta, GA 30005-8847 Telephone: (770) 497-6400

Exclusions:

1. Any damage or deterioration resulting from the following:
   - Neglect of the periodic maintenance as specified in the product owner's manual
   - Improper repair or maintenance
   - Operating methods other than those indicated in the product owner's manual
   - Increasing engine speed beyond factory specification
   - The use of non-genuine Honda parts, accessories, lubricants, and fluids other than those approved by Honda
   - Exposure of the product to soot and smoke, chemical agents, bird droppings, sea water, salt, or other corrosive environments
   - Collision, fuel contamination or deterioration, neglect, unauthorized alteration, misuse, incorporation or use of unsuitable attachments or parts
   - Normal wear and tear (including, but not limited to, normal fading of painted or plated surfaces, sheet peeling, and other natural deterioration)
2. Consumable parts: Honda does not warrant parts deterioration due to normal wear and tear. The following parts are not covered by this warranty unless they are needed during another repair covered under this warranty: spark plug, fuel filter, air cleaner element, clutch disc, tire, wheel bearing, recoil starter rope, cable, belt, cutter blade, oil, and grease.
3. Cleaning, adjustment, and normal periodic maintenance work (carburetor cleaning, engine oil draining, blade sharpening, belt and cable adjustments).
4. Any product that has ever been declared a total loss or sold for salvage by a financial institution or insurer.
5. Auger and paddle assemblies, skid shoes, and scraper bars of snow throwers/snow blowers, tiller tines of roto-tillers, and mower blades and mower deck housings are specifically not warranted against impact damage including, but not limited to, abrasive damage.

Disclaimer of Consequential Damage and Limitation of Implied Warranties:
American Honda disclaims any responsibility for loss of time or use of the product, transportation, commercial loss, or any other incidental or consequential damage. Any implied warranties are limited to the duration of this written limited warranty. Some states do not allow limitations on how long an implied warranty lasts and/or do not allow the exclusion or limitation of incidental or consequential damages, therefore the above exclusions and limitations may not apply to you. This warranty gives you specific legal rights, and you may also have other rights, which vary from state to state.

Honda Parts, Accessories, and Apparel
This warranty is limited to Honda Power Equipment parts, accessories, and apparel when distributed by American Honda Motor Co., Inc., 4900 Marconi Drive, Alpharetta, Georgia 30005-8847.

PRODUCTS COVERED BY WARRANTY:	LENGTH OF WARRANTY: (FROM DATE OF ORIGINAL RETAIL PURCHASE)	
	PRIVATE RESIDENTIAL	COMMERCIAL/ RENTAL/INSTITUTIONAL
Parts	6 months	3 months
Batteries	6 months	3 months
Accessories	12 months	3 months
Apparel	6 months	3 months

To Qualify for This Warranty:
1. The parts, accessories, or apparel must be purchased from American Honda or a dealer authorized by American Honda to sell those products in the United States, Puerto Rico, and the U.S. Virgin Islands. Parts and accessories must be purchased for installation on original Honda equipment or engines to be eligible for warranty coverage.
   Installing parts and accessories on non-Honda products or engines voids this warranty.
2. You must be the first retail purchaser. This warranty is not transferable to subsequent owners.

What American Honda Will Repair or Replace Under Warranty:
American Honda will repair or replace, at its option, any Honda Power Equipment parts, accessories, or apparel that are proven to be defective in material or workmanship under normal use during the applicable warranty time period. Anything replaced under warranty becomes the property of American Honda Motor Co., Inc. The warranty on all parts, accessories, and apparel replaced under warranty will expire coincident with the original warranty on the replaced parts, accessories, or apparel.
Parts and accessories installed by a dealer who is authorized by American Honda to sell them will be repaired or replaced under warranty without charge for parts or labor. If installed by anyone else, parts and accessories will be repaired or replaced under warranty without charge for parts, but any labor charges will be the responsibility of the purchaser.
Apparel will be repaired or replaced under warranty without any charge.

To Obtain Warranty Service:
You must, at your expense, take the Honda Power Equipment part, accessory, or apparel, or the Honda Power Equipment on which the accessory or part is installed, and proof of purchase to any Honda Power Equipment dealer in the United States, Puerto Rico, or the U.S. Virgin Islands who is authorized to sell that product, during the dealer's normal business hours.
To locate a dealer near you, go to our web site at http://PowerEquipment.Honda.com and click on Find a Dealer.
If you are unable to obtain warranty service or are dissatisfied with the warranty service you receive, contact the owner of the dealership involved; normally this will resolve the problem. However, if you should require further assistance, write or call the Power Equipment Customer Relations Department of American Honda Motor Co., Inc. Refer to page 103 for contact information.

Exclusions:
This warranty does not extend to parts, accessories, or apparel affected or damaged by collision, normal wear, use in an application for which the product was not designed, or any other misuse, neglect, incorporation or use of unsuitable attachments or parts, unauthorized alteration, improper installation, or any causes other than defects in material or workmanship of the product. Installing parts and accessories on non-Honda products or engines voids this warranty.

Disclaimer of Consequential Damage and Limitation of Implied Warranties:
American Honda disclaims any responsibility for loss of time or use of the product, or the power equipment on which the product is installed, transportation, commercial loss, or any other incidental or consequential damage. Any implied warranties are limited to the duration of this written warranty. Some states do not allow limitations on how long an implied warranty lasts and/or do not allow the exclusion or limitation of incidental or consequential damages, so the above exclusions and limitations may not apply to you.
This warranty gives you specific legal rights, and you may also have other rights, which vary from state to state.

Emission Control System Warranty

Your new Honda Power Equipment engine complies with the U.S. EPA, Environment Canada, and State of California (models certified for sale in California only) emission regulations. American Honda Motor Co., Inc. provides the emission warranty coverage for engines in the United States and its territories. Honda Canada Inc. provides the emission warranty for engines in the 13 provinces and territories of Canada. In the remainder of this Emission Control System Warranty, American Honda Motor Co., Inc. and Honda Canada Inc. will be referred to as Honda.

CALIFORNIA EXHAUST AND EVAPORATIVE EMISSIONS CONTROL WARRANTY STATEMENT YOUR WARRANTY RIGHTS AND OBLIGATIONS

The California Air Resources Board and Honda are pleased to explain the exhaust and evaporative emissions ("emissions") control system warranty on your 2024 and later Honda Power Equipment engine. In California, new equipment that use small off-road engines must be designed, built, and equipped to meet the State's stringent anti-smog standards. Honda must warrant the emissions control system on your power equipment engine for the periods of time listed below provided there has been no abuse, neglect, or improper maintenance of your small off-road engine or equipment leading to the failure of the emissions control system.

Your emissions control system may include parts such as the carburetor or fuel-injection system, the ignition system, catalytic converter, fuel tanks, fuel lines (for liquid fuel and fuel vapors), fuel caps, valves, canisters, filters, clamps and other associated components. Also included may be hoses, belts, connectors, and other emission-related assemblies (see page 111 for additional covered parts).

Where a warrantable condition exists, Honda will repair your power equipment engine at no cost to you including diagnosis, parts and labor.

MANUFACTURER'S WARRANTY COVERAGE:

The exhaust and evaporative emissions control system on your Honda power equipment engine is warranted for two years. If any emissions-related part on your Honda power equipment engine is defective, the part will be repaired or replaced by Honda.

OWNER'S WARRANTY RESPONSIBILITY:

- As the power equipment engine owner, you are responsible for the performance of the required maintenance listed in your owner's manual. Honda recommends that you retain all receipts covering maintenance on your power equipment engine, but Honda cannot deny warranty coverage solely for the lack of receipts or for your failure to ensure the performance of all scheduled maintenance.
- As the power equipment engine owner, you should however be aware that Honda may deny you warranty coverage if your power equipment engine or a part has failed due to abuse, neglect, improper maintenance, or unapproved modifications.
- You are responsible for presenting your power equipment engine to a Honda Power Equipment servicing dealer as soon as the problem exists. The warranty repairs shall be completed in a reasonable amount of time, not to exceed 30 days.

If you have any questions regarding your warranty rights and responsibilities, you should contact the Honda office in your region:

American Honda Motor Co., Inc.
Power Equipment Customer Relations
4900 Marconi Drive
Alpharetta, Georgia 30005-8847
Telephone: (888) 888-3139
Email: powerequipmentemissions@ahm.honda.com

or

Honda Canada Inc.
Power Equipment Customer Relations
180 Honda Blvd.
Markham, ON, L6C 0H9
Telephone: (888) 946-6329

YOUR WARRANTY RIGHTS AND OBLIGATIONS

Other States, U.S. territories, and Canada:
In other areas of the United States and in Canada, your engine must be designed, built, and equipped to meet the U.S. EPA and Environment Canada emission standards for spark-ignited engines at or below 19 kilowatts.

Specific Honda products that do not meet the California emissions regulations can be identified by a "California: Not for sale or use" or "California: Only for use in Farming or Construction Equipment" decal.

All of the United States and Canada:
The exhaust and evaporative emissions control system on your Honda power equipment engine sold in the United States and Canada is warranted for two years from the date of delivery to the ultimate purchaser or the length of the Honda Distributor's Limited Warranty, whichever is longer. This warranty is transferable to each subsequent purchaser for the duration of the warranty period.

If any emissions-related part on your Honda power equipment engine is defective, the part will be repaired or replaced by Honda. All defective parts replaced under this warranty become the property of Honda. Only Honda approved replacement parts may be used in the performance of any warranty repairs and must be provided without charge to the owner. A list of warranted parts is on the reverse side of this warranty statement. All emission related parts are under warranty for the remainder of the warranty period. Normal maintenance items, such as spark plugs and filters, that are on the warranted parts list are warranted up to their required replacement interval only.

Honda will also replace other engine components damaged by a failure of any warranted part during the warranty period. Honda cannot deny coverage under the emission warranty solely for use of non-Honda replacement parts or service performed at a location other than an authorized Honda dealership; however, use of a part that is not functionally identical to the original equipment part in any respect that may in any way affect emissions (including durability) could result in denial of coverage. If such a non-Honda replacement part is used in the repair or maintenance of your engine, and an authorized Honda dealer determines it is defective or causes a failure of a warranted part, your claim for repair of your engine may be denied. If the part in question is not related to the reason your engine requires repair, your claim will not be denied.

CONSUMER INFORMATION

TO OBTAIN WARRANTY SERVICE:

You must, at your own expense, take your Honda Power Equipment engine or the product on which it is installed, along with your sales registration card or other proof of original purchase date, to any Honda Power Equipment dealer who is authorized by Honda to sell and service that Honda product during their normal business hours. Claims for repair or adjustment found to be caused solely by defects in material or workmanship will not be denied because the engine was not properly maintained and used.
If you are unable to obtain emission warranty service or are dissatisfied with the warranty service you received, contact the owner of the dealership involved. Normally this should resolve your problem. However, if you require further assistance, contact the Honda office in your region:

American Honda Motor Co., Inc.
Power Equipment Customer Relations
4900 Marconi Drive
Alpharetta, Georgia 30005-8847
Telephone: (888) 888-3139
Email: powerequipmentemissions@ahm.honda.com

or

Honda Canada Inc.
Power Equipment Customer Relations
180 Honda Blvd.
Markham, ON, L6C 0H9
Telephone: (888) 946-6329

EXCLUSIONS:

Failures other than those resulting from defects in material or workmanship are not covered by this warranty. This warranty does not extend to emission control systems or parts that are affected or damaged by owner abuse, neglect, improper maintenance, or unapproved modifications.
This warranty does not cover replacement of expendable maintenance items made in connection with required maintenance service after the item's first scheduled replacement as listed in the maintenance section of the product owner's manual, such as: spark plugs and filters.

DISCLAIMER OF CONSEQUENTIAL DAMAGE AND LIMITATION OF IMPLIED WARRANTIES:

American Honda Motor Co., Inc. and Honda Canada Inc. disclaim any responsibility for incidental or consequential damages such as loss of time or the use of the power equipment, or any commercial loss due to the failure of the equipment; and any implied warranties are limited to the duration of this written warranty. This warranty is applicable only where the California, U.S. EPA, or Environment Canada emission control system warranty regulation is in effect.

EMISSION CONTROL SYSTEM WARRANTY PARTS:

SYSTEMS COVERED BY THIS WARRANTY:	PARTS DESCRIPTION:
Fuel Metering	Carburetor assembly (includes starting enrichment system), Oxygen sensor, Throttle body, Engine temperature sensor, Engine control module, Fuel injector, Fuel regulator, Intake manifold
Evaporative	Fuel tank, Fuel cap, Fuel lines (for liquid and fuel vapors), Carbon canister, Canister mounting brackets, Fuel line fittings, Fuel strainer, Fuel valve, Fuel pump, Fuel hose joint, Canister purge port connector, Evaporative emission canister purge valve
Exhaust	Catalyst, Exhaust pipe, Muffler (with catalyst), Exhaust manifold
Air Induction	Air cleaner case, Air cleaner element*
Ignition	Flywheel comp., Flywheel magneto, Ignition pulse generator, Crankshaft position sensor, Power coil, Ignition coil assembly, Ignition control module, Spark plug cap, Spark plug*
Crankcase Emission Control	Crankcase breather tube, Breather valve assembly, Oil filler cap
Miscellaneous Parts	Tubing, fittings, seals, gaskets, and clamps associated with these listed systems.

*Covered up to the first required replacement only.
See the "MAINTENANCE SCHEDULE" on page 66.

CONSUMER INFORMATION

REGISTRATION

Please Register Your Generator

If your dealer did not collect registration information from you, please take a few minutes and register your purchase with Honda. This allows us to contact you with any important updates regarding your generator. Please note registration is not required to obtain warranty service. You can register your generator by visiting the Honda Power Equipment website, http://powerequipment.honda.com/support and click on Product Registration. Your information will remain confidential. It will not be released to any other company or organization.

INDEX

A

AC Appliance and Power Cord 42
AC Applications 60
AC Circuit Breaker 28
AC Circuit Protectors 27
AC OPERATION 59
AIR CLEANER SERVICE 68
AIR FILTER CHECK 44
Air Index 96
ARE YOU READY TO GET STARTED? 40
ASSEMBLY 12, 13
Auto Throttle® System 31
AUTO THROTTLE® SYSTEM 61

B

Battery Charging 79
Battery Inspection 77
Battery Installation 79
Battery Removal 78
BATTERY SERVICE 75
BEFORE OPERATION 40

C

Carbon Monoxide Hazards 8
CARBURETOR MODIFICATION FOR HIGH ALTITUDE OPERATION 93
Check the Battery 41
Check the Engine 41
Check the GFCI 41
Choke Knob 24
Cleaning 81
CO-MINDER (CO Shut-off System) 25
COMPONENT & CONTROL LOCATIONS 22
Connections to a Building's Electrical System 62
CONSUMER INFORMATION 100
CONTROLS & FEATURES 22
CONTROLS 24
CUSTOMER SERVICE INFORMATION 101

D

DEALER LOCATOR INFORMATION 100
Distributor's Limited Warranty 102

E

Electric Shock Hazards 9
Emergency Procedures 75
EMISSION CONTROL SYSTEM INFORMATION 94
Emission Control System Warranty 107
ENGINE AUTOMATICALLY STOP AND THE CO ALARM INDICATOR FLASHING 91
ENGINE AUTOMATICALLY STOP AND THE FAULT/CO SENSOR LIFE INDICATOR FLASHING 91
Engine Cylinder 85
ENGINE LACKS POWER 90
ENGINE OIL CHANGE 67
ENGINE OIL LEVEL CHECK 43
ENGINE OIL RECOMMENDATIONS 18
ENGINE OIL 17, 85
Engine Switch 24
ENGINE WILL NOT START 89

F

FAULT/CO SENSOR LIFE INDICATOR FLASHING WHEN RUNNING THE ENGINE 91
FEATURES 33
Fire and Burn Hazards 9
Foam Air Filter Cleaning 68
Folding Handle 32
Fuel Gauge 39
FUEL RECOMMENDATIONS 21
Fuel Valve Lever 24
FUEL 19, 81
FUSE 80

G

GENERATOR SAFETY 7
GFCI OPERATION CHECK 53
GFCI System ①
(120V-30A, 120V/240V-30A, 120V/240V-37.5A Receptacles) 54
GFCI System ②
(120V-20A Duplex Receptacle) 56
Ground Fault Circuit Interrupter (GFCI) 29
Ground Terminal 38

H

Handle Installation 14
Hanger Kit Installation 16
Honda PUBLICATIONS 100
HOW TO RESTART WHEN STOPPED BY CO-MINDER (CO SHUT-OFF SYSTEM) 52

I

i-Monitor 34
IMPORTANT SAFETY INFORMATION 7
INITIAL USE INSTRUCTIONS 17
INTRODUCTION 1
IS YOUR GENERATOR READY TO GO? 40

K

Knowledge 40

L

Loose Parts 13

M

MAINTENANCE SAFETY 65
MAINTENANCE SCHEDULE 66

N

NO POWER AT THE AC RECEPTACLES 90

O

Oil Alert® System 33
OPERATION 47
Operator Responsibility 7

Q

QUICK REFERENCE INFORMATION ..... inside back cover

R

Refuel With Care 10
REGISTRATION 112
REMOVAL FROM STORAGE 86

S

SAFE OPERATING PRECAUTIONS 46
SAFETY LABEL LOCATIONS 11
Safety Precautions 65

SAFETY 12
SEDIMENT CUP CLEANING 69
SERIAL NUMBER LOCATION 92
SERVICING YOUR GENERATOR 64
SPARK ARRESTER SERVICE 73
SPARK PLUG SERVICE 71
Special Requirements 63
SPECIFICATIONS 97
STANDBY POWER 62
STARTING THE ENGINE 47
STOPPING THE ENGINE 51
STORAGE PRECAUTIONS 86
STORAGE PREPARATION 81
STORAGE 81
System Ground 62

T

TAKING CARE OF UNEXPECTED PROBLEMS 89
TECHNICAL INFORMATION 92
THE IMPORTANCE OF MAINTENANCE 64
The Importance of Proper Assembly 12
TRANSPORTING 87

U

Unpacking 13

V

Vehicles and Transportation Hazards 10

W

Wheel Kit Installation 15
WIRING DIAGRAM 99

QUICK REFERENCE INFORMATION

Fuel	Type	Regular unleaded gasoline with an ethanol content of no more than 10% and a pump octane rating of 86 or higher (see page 21)
Engine Oil	Type	SAE 10W-30, API SJ or later (or equivalent), for general use (see page 18) Maximum oil capacity: Without oil filter replacement: approximately 1.6 US qt (1.5 L) With oil filter replacement: approximately 1.8 US qt (1.7 L)
Spark Plug	Type	ZFR5F (NGK)
	Electrode Gap	0.028–0.031 in (0.7–0.8 mm)
Maintenance	Before each use	Check engine oil level. Check air cleaner. Check GFCI operation. Check battery electrolyte.
	First 20 hours	Change engine oil.
	Subsequent	See "MAINTENANCE SCHEDULE" (see page 66)

HONDA

EB10000
31Z26627
00X31-Z26-6270

(AH)(英)(FM)
(Hi) Printed in China