MODERN FORMS SMART FANS

Torque

Installation Instructions

WORKS WITH alexa

works with the Google Assistant

Works with SmartThings

ecobee

Control4

Bluetooth

ENERGY STAR

Please read and save these instructions before installation

DO NOT RETURN TO STORE

General Inquiries

For all questions about your ceiling fan please read all included instructions, installation procedures, troubleshooting guidelines and warranty information before starting installation.

For missing parts or general inquiries call our trained technical staff at:

1-866-810-6615 option 0

MON-FRI 8AM-8PM EST

Email: customerservice@modernforms.com

Or live chat at modernforms.com

Fan Support

For fast service have the following information below when you call:

1. Model Name and Number
2. Part Number and Part Description
3. Date Of Purchase and Purchase Location

1-866-810-6615 option 1

MON-FRI 8AM-8PM EST

Email: fansupport@modernforms.com

Safety Rules

For operation, maintenance, and troubleshooting information, visit http://modernforms.com/fan-support/

To reduce the risk of electric shock, ensure electricity has been turned off at the circuit breaker before beginning. All wiring must be in accordance with the National Electrical Code "ANSI/NFPA 70" and local electrical codes. Electrical installation should be performed by a licensed electrician.

The fan must be mounted with a minimum of 7 ft. (2.1m) clearance from the trailing edge of the fan blades to the floor and a minimum of 1.5 ft (0.5m) from the edge of the fan blades to the surrounding walls. Never place objects in the path of the fan blades. To avoid personal injury or damage to the fan and other items, please be cautious when working around or cleaning the fan.

To avoid electrical shock or damage to the motor or finish, do not use water or chemicals when cleaning the fan or fan blades. A dry cloth or lightly dampened cloth will be suitable for most cleaning.

After making electrical connections, spliced conductors should be turned upward and pushed carefully up into the outlet box. The wires should be spread apart with the grounded conductor and the equipment-grounding conductor on one side of the outlet box, and the ungrounded conductor on the other side of the outlet box.

All set screws must be checked and re-tightened where necessary before installation.

WARNING: Do not install or use your fan if any part(s) is/are damaged or missing. This product is designed for use only with the supplied parts and/or accessories designated for use with this product by Modern Forms. Substitution of parts or accessories not designated for use with this product by Modern Forms could result in personal injury or property damage and will void the warranty. Contact an authorized dealer or the manufacturer if any parts are damaged or missing.

WARNING: To reduce the risk of electric shock, this fan must be installed and operated with the supplied wall control, or controlled from the Modern Forms app.

WARNING: Do not use power tools to assemble or install your fan. Using power tools can result in improper assembly which can lead to noise or fan damage,personal injury or property damage.

WARNING: To reduce the risk of personal injury, do not bend the blade arms when installing the brackets, balancing the blades or cleaning the fan.

WARNING: Do not insert foreign objects between rotating fan blades.

WARNING: Do not operate fan unless fan blades are in place. Noise and fan damage can occur

WARNING: This appliance is not intended for use by young children without supervision.

WARNING: To reduce the risk of fire, electric shock, personal injury or damage to the fan or other items, the outlet box and support structure must be securely mounted and capable of reliably supporting a minimum of 35 lbs (15.9 kg). Use only UL/cUL listed outlet boxes marked "FOR FAN SUPPORT." Use only the screws and washers provided with the outlet box.

CAUTION: Before assembling your fan, refer to the "Making the Electrical Connections" section. If you feel you do not have enough wiring knowledge or experience, have your fan installed by a licensed electrician.

NOTE: Before servicing or cleaning the fan, switch power off at the circuit breaker.

Get Smart...

Integrates seamlessly with:

devices you already own

Download on the App Store | GET IT ON Google Play

ecobee | works with the Google Assistant | WORKS WITH alexa | Works with SmartThings | CONNECTS WITH Control4

Premium smart features:

complement high quality materials

Wet Location-listed to the strictest UL/cUL safety regulations. Finished and rated for interior and exterior use

Wi-Fi and Bluetooth enabled for flexible control

DC MOTOR

Quiet, reliable, and up to 70% more efficient than AC fans

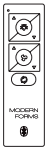

Bluetooth Remote Control
6 fan speeds
F-RCBT-WT White

Accessories:

personalize your experience

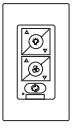

Bluetooth Wall Control
6 fan speeds | Sold separately
F-WCBT-WT White

Contents

1. Mounting Options 10
2. Installing the Mounting Bracket 12
3. Attaching the Fan Blades/Decorative Bottom Assembly/ 12
4. Hanging the Fan 14
5. Making the Electrical Connections 16
6. Installing the Optional Wall Control 18
7. Finishing the Installation 20
8. Controlling the Fan 22
9. Reset 24
10. Breeze Mode 24
11. Application 24
12. Accessories 26
13. Troubleshooting 28-31

Tools Required

Package Contents

1. Blade Set of 3
   RPL-F2204-58-BD-**
2. Hanger Assembly
   Mounting Bracket
   Downrod Assembly
   RPL-HGR-ASM-**
3. Canopy w/Canopy Ring
   RPL-CAN-OCT-**
4. Coupling Cover
   RPL-F2204COUCVR-**
5. Motor Assembly
6. Decorative Bottom Assembly
   RPL-F2204DECASM-**
7. Decorative Bottom Cap
   RPL-F2204CAPASM-**
8. Control Receiver
   w/Hardware
   F-R3N-2204-058
9. Remote Control
   F-RCBT-WT

** denotes finish code of fan

Hardware Bag

RPL-F2204-PARTS

- Part A
- Part B
- Part C
- Part D
- Part E

Hardware Bag

A: Junction Box
#10 x 38mm Pan Head Phillip Screws (2)

Ø5 x 14 x 1mm Flat Washer (2)

3/16" Star Washer (2)

B: Blade Screws/Washers
1/4" x 19" Pan Head Phillip Screws (7)

1/4 (6x13x1mm) Flat Washers (7)

Φ6x14x1mm Rubber Washers (7)

C: Decorative Bottom Assembly Screws* RPL-F2204-HEX-**
M3 L-Shaped Hex Wrench (1)

M5 Hex Screws (7)

D: Safety Cable
Φ6.5x19x2mm Flat Washer (1)

3/16"(Φ5.2x8.4x1.0mm) Spring Washer (1)

#10x76mm Pan Head Phillip Wood Screws (1)

E: Wire Nuts/Ties
Found with the receiver

* The standard hardware bag does not come included with hex screws/wrench. To order replacement hex screws/wrench - order part no. RPL-F2204-HEX-**

Before discarding packaging materials be certain all parts have been removed.
Place the parts from the hardware bag into a small container to keep them from being lost.

Hanging Weight: 19 lbs

MAC ID

IMPORTANT: Please make note of the MAC ID on the receiver and keep it in a safe place.

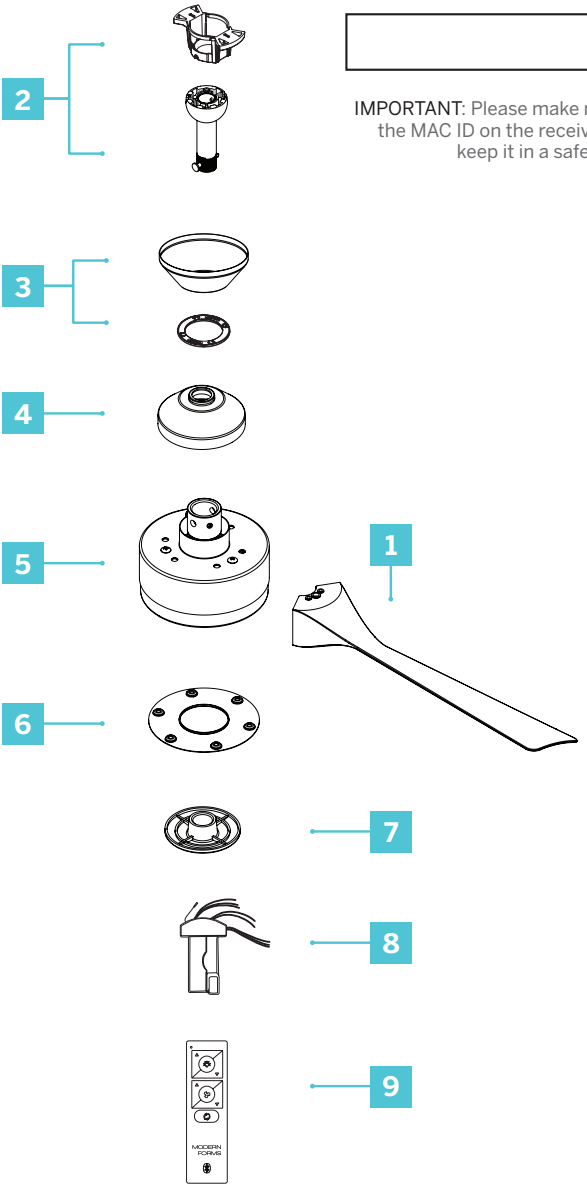

1. Mounting Options

⚠ **CAUTION:** To prevent electrical shock, ensure electricity has been turned off at the circuit breaker before beginning.

If there isn't an existing UL/cUL listed outlet box, please refer to the following instructions. Secure the outlet box directly to the building structure. Use appropriate fasteners and building materials. The outlet box and support structure must be able to fully support the moving weight of the fan (at least 35 lbs/15.9 kg). Do not use plastic outlet boxes. Use only UL/cUL listed outlet boxes marked **"FOR FAN SUPPORT."**
Refer to Part A

Secure the outlet box directly to the building structure.

Figures 1-1C are examples of different ways to mount the outlet box.

NOTE: To hang your fan where there is an existing fixture but no ceiling joist, you may need an installation hanger bar.

NOTE: Downrod fans can be suspended up to a maximum recommended length of 72" using additional downrods (sold separately) and the included 80" lead wire.

NOTE: The sloped ceiling kit (sold separately) is required for sloped ceiling applications, and will accommodate slopes up to 45° (Fig. 1B).

NOTE: You may need a longer downrod to maintain proper blade clearance when installing on a steep, sloped ceiling (Fig. 1B).

1

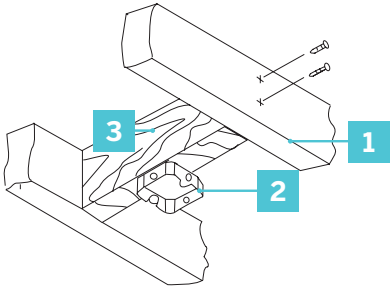

1. Support Brace
2. Outlet Box
3. Joist

1A

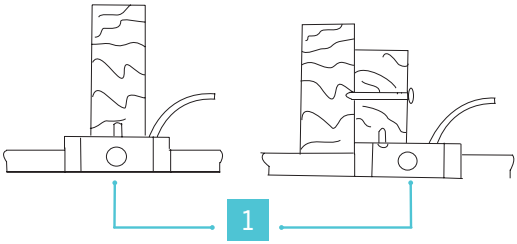

1. Outlet Box

1B

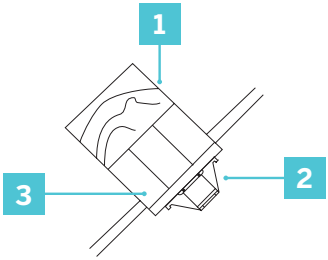

Support Ceiling
Max 30° Angle

1. Support Brace
2. Mounting Bracket
3. Recess Outlet Box

1C

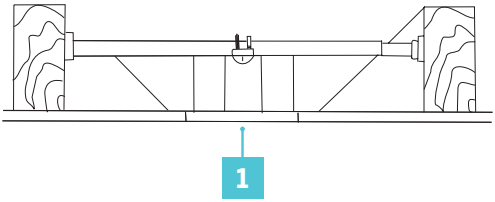

1. Outlet Box

2. Installing the Mounting Bracket

Remember to turn off power at the breaker.
Follow the steps below to hang your fan properly:

1. Disconnect power at the breaker to the fan location.
2. Remove 1 of 2 screws from the bottom of mounting bracket and save for use in Finishing the Installation section. Loosen the other screw (Fig. 2).
3. Pass the 120-volt supply wires through the center hole in the ceiling mounting bracket as shown in (Fig. 2A).
4. Secure the mounting bracket to the ceiling outlet box with the screws and washers provided with your outlet box (Fig. 2A).

3. Attaching the Fan Blades/Decorative Bottom Assembly/Cap

1. Attach the fan blades with the blade screws and washers provided. Place the rubber washers beneath the flat washers. Repeat for remaining blades. (Fig. 3). **Refer to Part B**
2. Turn the fan over and install the decorative bottom assembly with the included screws. **Use Part C** with included allen wrench. (Fig. 3A). It is recommended to twist in each of the 6 screws by hand and then tighten one-by-one.
3. Twist the bottom cap onto the bottom of the fan as shown. (Fig. 3B)

NOTE: You may want to place the fan housing on the included styrofoam to help stabilize the housing during the blade installation process.

2

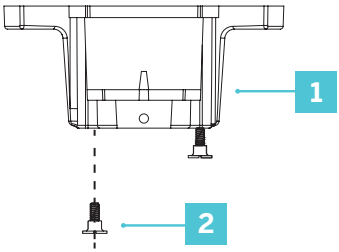

1. Mounting Bracket
2. Screw

2A

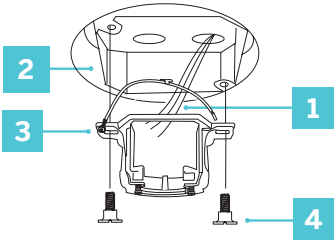

1. 120V Wires
2. cUL Listed Electrical Box
3. Mounting Bracket
4. Mounting Screws (supplied with outlet box)

3

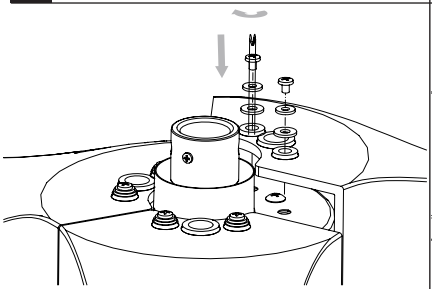

3A

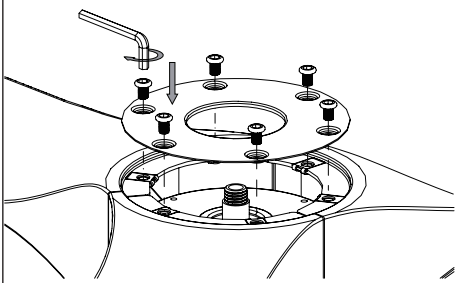

3B

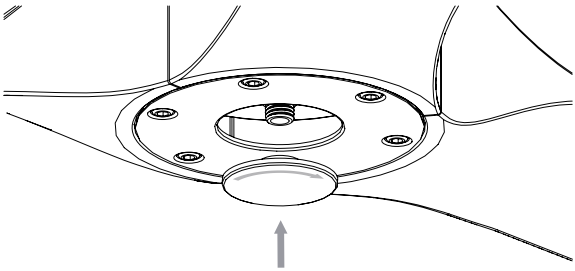

4. Hanging the Fan

1. Take out the set screw located in the hanger ball, lower the hanger ball and remove the cross pin. Remove the hanger ball from the hanger ball downrod assembly (Fig. 4).
2. Remove the clevis pin and cotter pin, and loosen the two collar screws from the motor collar (Fig. 4).
3. Carefully feed the motor wires and safety cable up through the downrod. Thread the downrod into the collar (Fig. 4A).
4. Align the holes of downrod and collar and insert the cotter pin and clevis pin. Tighten the two collar screws (Fig. 4).

⚠ **WARNING:** Failure to properly install the cotter pin and/or tighten the screws could result in the fan loosening and possibly falling.

1. Slip the coupling cover, canopy screw cover (painted side face down), and canopy (opened side up) onto the downrod (Fig. 4A). Coupling cover goes all the way to the bottom.
2. Carefully reinstall the hanger ball onto the downrod, being sure that the cross pin is in the correct position, the setscrew is tightened and wires are not twisted (Fig. 4A).
3. Carefully lift the fan motor assembly up to the mounting bracket and seat the hanger ball in the mounting bracket socket. Make sure the tab on the mounting bracket socket is properly seated in the groove in the hanger ball (Fig. 4B). Rotate the socket assembly until the ball drops and locks into the hanger bracket screw. (Fig. 4C)
4. Secure the safety cable into the structure beams using the wood screw, washers, and spring washers provided (Fig. 4D).
   Refer to Part C

NOTE: A Safety cable is required for all installations in Canada. Safety cable is required for ceiling fan and light combinations over 35 lbs. in both flush and downrod models in the United States.

4

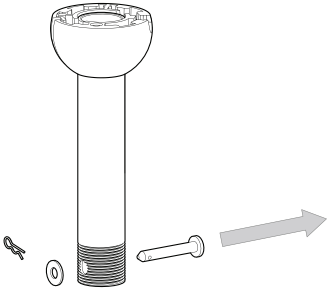

4A

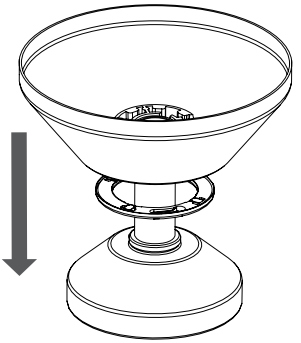

4B

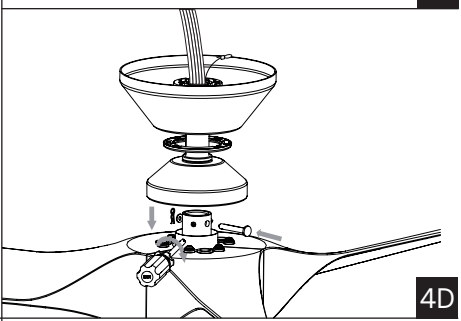

4C

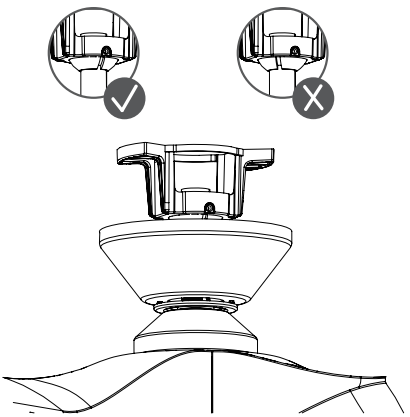

4D

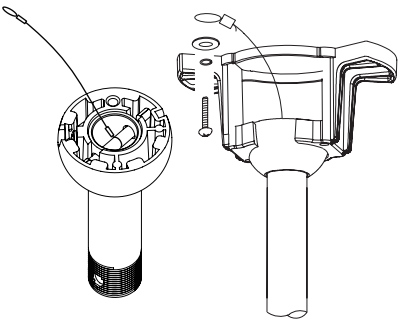

5. Making the Electrical Connections

⚠ **WARNING** : Installation of this fan requires that a three-conductor cable (including ground wire) which should run between ceiling and wall outlet box.

⚠ **WARNING**: Check to see that all connections are tight, including ground, and that no bare wire is visible at the wire nuts, except for the ground wire. **Use Part E**

Insert the receiver into the mounting bracket with the flat side of the receiver facing the ceiling (Fig. 5).

Motor to Receiver & Receiver to house supply wires (Fig. 5A).

1. Connect the hanger ball/downrod assembly ground wire, mounting bracket ground wire and receiver ground wire to the ground wire in outlet box.

⚠ **WARNING**: Failure to connect ground wires could result in poor fan control functionality.

2. Connect the red wire from the fan to the red wire marked "**TO MOTOR**" from the receiver.
3. Connect the grey wire from the fan to the grey wire marked "**TO MOTOR**" from the receiver.
4. Connect the yellow wire from the fan to the yellow wire marked "**TO MOTOR**" from the receiver.

5

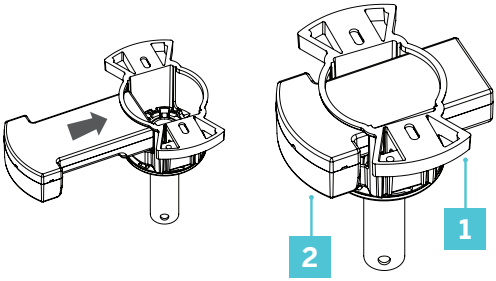

1. Mounting Bracket
2. Receiver

5A

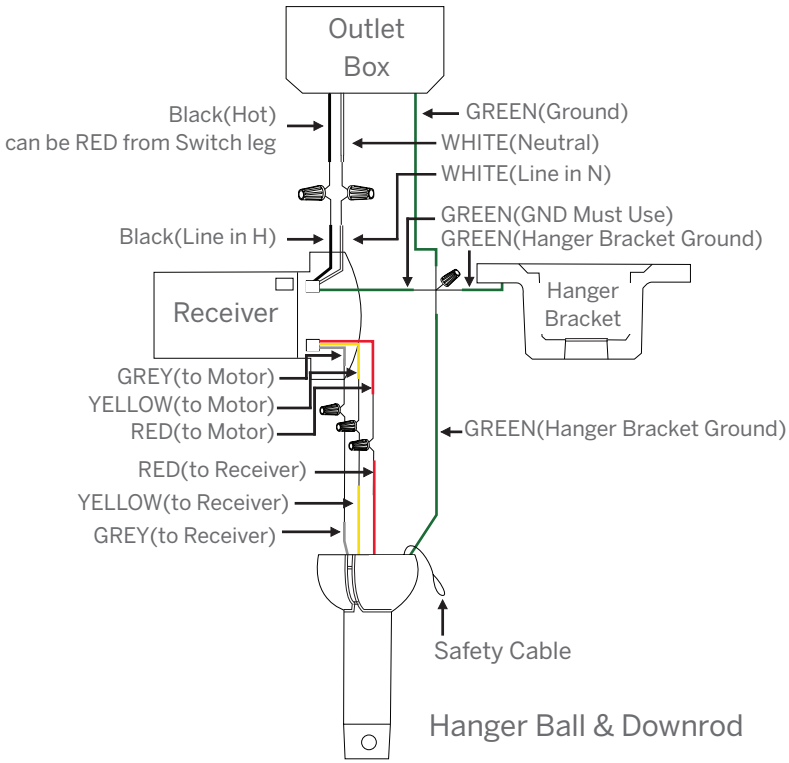

Follow the steps above to connect the fan to your household wiring. Use the plastic wire nuts with your fan. Secure the plastic wire nuts with electrical tape. Make sure there are no loose strands or connections.

6. Installing the Optional Wall Control

NOTE: Bluetooth Wall Control Optional Accessory not included. A Bluetooth Wall Control can be purchased separately.

1. Connect the green wire marked “GROUND” from the wall control to the copper wire from the wall outlet box that feeds back to the circuit breaker – important for proper fan function (Fig. 6).
2. Connect the black wire marked “LINE IN” from the wall control to the black LINE VOLTAGE wire from the wall outlet box that feeds back to the circuit breaker (Fig. 6).
3. Connect the red wire from the wall control to the black wire from the wall outlet box that feeds up to the fan (Fig. 6).
4. Connect the white wire from the wall control to the white (neutral) wire from the wall outlet box (Fig. 6).
5. Carefully tuck the wire connections inside the outlet box. Secure the wall control with the two (2) wall control screws provided (Fig. 6A).
6. Attach the wall mounting plate over the wall switch and secure with the two (2) wall mounting plate screws provided (Fig. 6A).
7. Fasten the wall plate to the wall mounting plate (Fig. 6A).

6

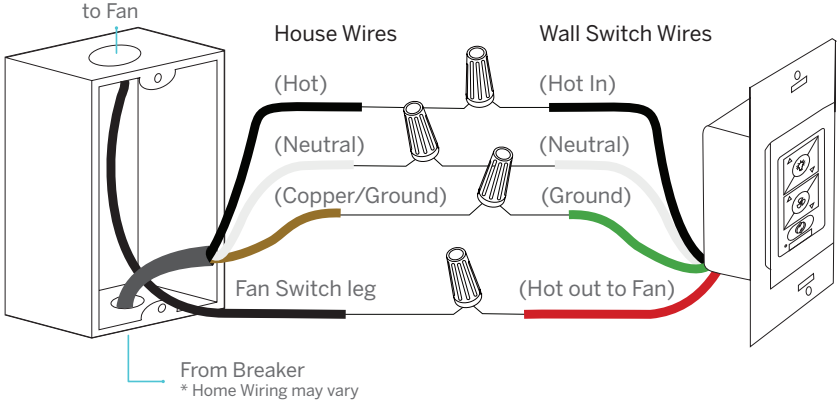

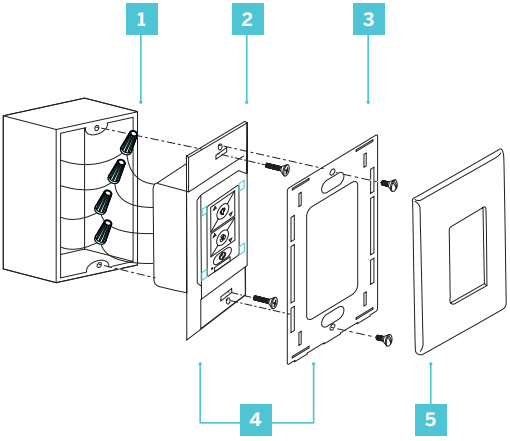

1. Wall Outlet
2. Wall Control
3. Wall Mounting Plate
4. Mounting Plate Screws
5. Wallplate

Multi-location wiring

Individually pair each of the wall controls with the fan receiver using the pairing instruction. See page 27.

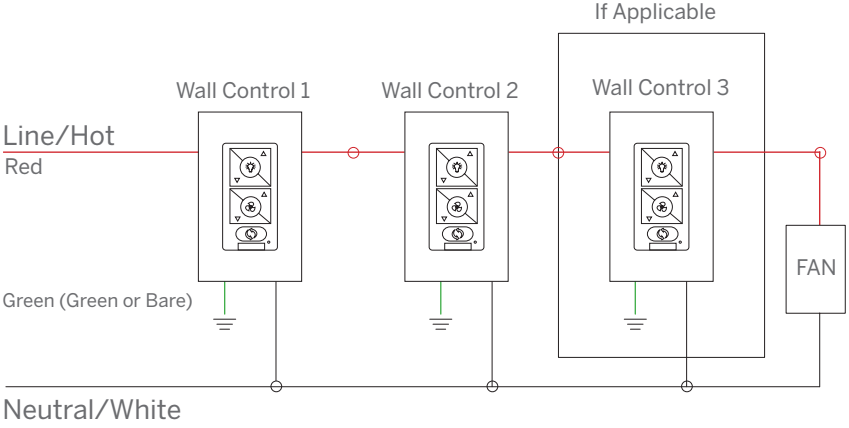

7. Finishing the Installation

1. Secure all wire connections with supplied wire ties to assist in canopy installation.
2. Tuck connections neatly into ceiling outlet box.
3. Slide the canopy up to hanger bracket and place the key hole on the canopy over the screw on the hanger bracket. Turn canopy until it locks in place at the narrow section of the key holes (Fig. 7).
4. Align the circular hole on canopy with the remaining hole on the hanger bracket. Secure by tightening the one screw previously loosened and the one previously removed. (Fig. 7A)
5. Adjust the canopy screws as necessary until the canopy and canopy cover are snug. (Fig. 7A)

⚠ **WARNING:** Make sure tab at bottom of hanger bracket is properly seated in groove of hanger ball before attaching canopy to bracket. Failure to properly seat tab in groove could cause damage to electrical wiring.

7

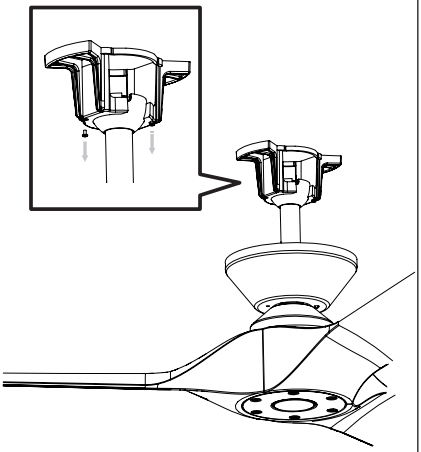

7A

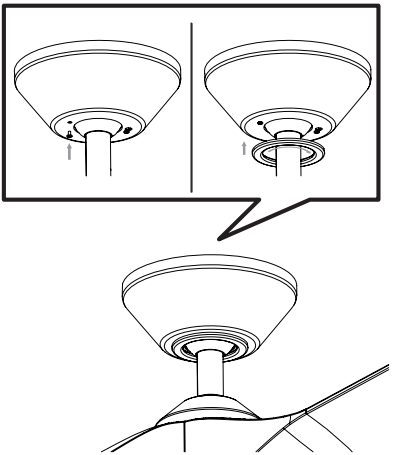

8. Controlling the Fan

Your fan was delivered to you with the included control already paired to your fan.

A: Light On/Off, Bright/Dim

B: Fan On/Off, Speed Up/Down

C: Season (Summer/Winter)

Air-Gap Switch: Pull tab to power off in case of emergency. Not necessary for normal fan operation (only included with wall control).

NOTE: Your fan features 6 speeds. An audible tone will indicate when the speed is increased or decreased. When the fan has reached the minimum/maximum speed level the fan will beep twice.

NOTE: This fan does not come with a light

Controlling One or Multiple Fans with Remote or Wall Controls

The Bluetooth Remote or Wall Control is capable of controlling an unlimited number of fans within line of site.

See (Fig. 9C) for Pairing.

NOTE: Pairing must be completed within three (3) minutes of powering the fan.

Synchronizing Control Across Multiple Fans

If you are controlling multiple fans with one controller, fans/lights may be synced by referring to Fig. 8B and instructions on the next page.

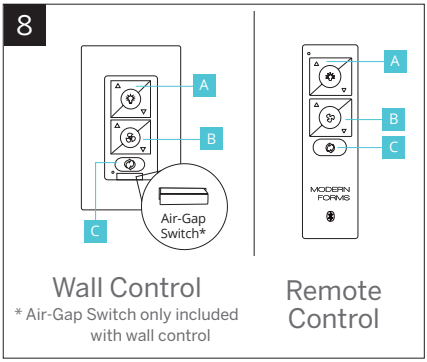

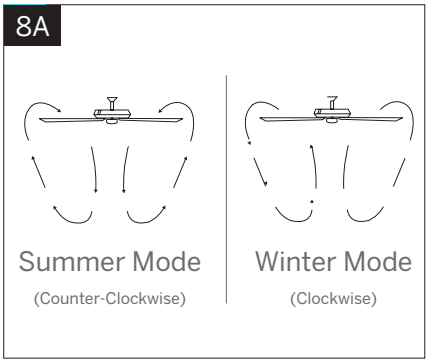

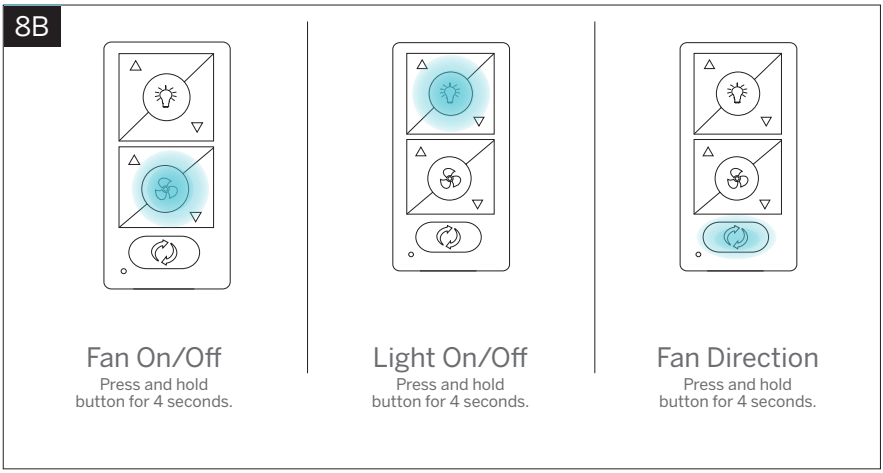

Fan On/Off: Press and hold button for 4 seconds. The LED on the remote will flash green and all connected fans will beep to indicate the message has been received. All fans will turn off. This will bring all fans controlled by the remote into sync.

Light On/Off: Press and hold button for 4 seconds. The LED on the remote will flash green and all connected fans will beep to indicate the message has been received. All lights will turn off. This will bring all fans controlled by the remote into sync.

Fan Direction: Press and hold button for 4 seconds. The LED on the remote will flash green and all connected fans will beep to indicate the message has been received. All fans will be set to summer mode (CCW rotation). This will bring all fans controlled by the remote into sync.

9. Reset

If advised by fan support, you can reset your fan to factory settings by referring to (Fig. 10A) or (Fig 10B).

NOTE: If you change your Wi-Fi settings (SSID or Security Passphrase) you will require a Wi-Fi reset. Refer to Fig. 11 and then use the Modern Forms app to connect your fan to the new network.

10. Breeze Mode

Breeze Mode mimics the natural ebb and flow of winds in nature by varying the fan speed.

NOTE: Breeze Mode always rotates your fan in the Summer direction.

1. To start Breeze Mode, press and for 4 seconds. The LED will blink green and the fan will beep.
2. To exit Breeze Mode and return to standard fan mode, press and for 4 seconds. The led will blink green and the fan will beep. Your fan will return to the direction and speed it was set to prior to entering Breeze Mode.

11. Application

In addition to the included remote control, you can control your fan with a wall control (sold separately) or through the Modern Forms app. To use the Modern Forms app, download it for free from the App Store or Google Play.

1. Open the app to create your account. You can also log in using your Facebook or Google account.
2. To set up a Wi-Fi connection you will need the SSID and Wi-Fi password for the network you wish to connect to.
3. You will receive a prompt to name your fan device and upload an optional picture of it if you choose.
4. The Modern Forms app allows you to perform normal fan functions, as well as create schedules, set sleep timers, invite other users, create groups, and use smart features such as Adaptive Learning. Integrate with smart home systems you already own including Amazon Alexa, Google Assistant, Samsung SmartThings, Control 4, and more.

9C

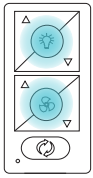

Pairing

Press and hold buttons for 10-15 seconds

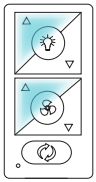

Unpairing

To purge, press and hold buttons for 4 seconds

10

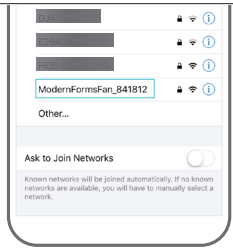

Fan Wi-Fi Reset

Press and hold the △ and ▽ for 10 seconds until LED blinks green and receiver emits 2 long beeps

10A

Factory Reset

Press and hold buttons for 10 seconds until the fan emits 3 beeps indicating the reset

10B

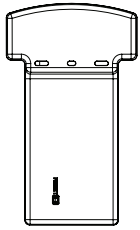

Receiver Factory Reset

Press the reset button on the receiver until the receiver emits 3 beeps indicating the reset

Scan and follow prompts for multilingual instruction options and Smart Fan FAQs:

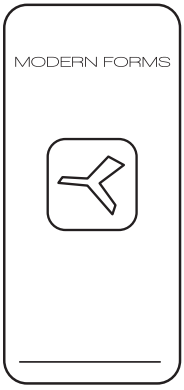

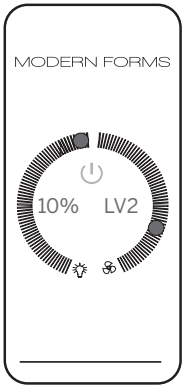

For detailed Instructions and Smart Home Device Integration

12. Accessories

personalize your experience

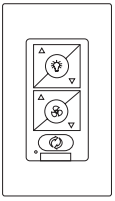

Bluetooth Wall Control

Dims light to 1% | ON/OFF

6 fan speeds | Sold separately

F-WCBT-WT White

Bluetooth Remote Control

Dims light to 1% | ON/OFF

6 fan speeds

F-RCBT-WT White

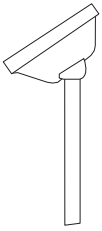

Sloped Ceiling Kit

Designed to accommodate buildings with steeper sloped ceilings up to 45° or 12/12 pitch
XF-SCK

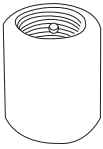

Coupler

Connects two downrods
XF-I

Downrod

XF-12 - 12” Downrod | XF-18 - 18” Downrod
XF-24 - 24” Downrod | XF-36 - 36” Downrod
XF-48 - 48” Downrod | XF-60 - 60” Downrod
XF-72 - 72” Downrod

13. Troubleshooting

My Fan Will Not Start

1. Check main and branch circuit fuses or circuit breakers.
2. Check line wire connections to fan and switch wire connections in the switch housings.

⚠ CAUTION: Make sure the main power is turned off!

My Fan is Noisy

1. Allow for 24-hour break-in period. Most noises associated with a new fan will go away during this time period.
2. Check to make sure the screws which attached to the blades (and blade arms when applicable) are tight.
3. Check to make sure all screws in motor housing are snug.
4. Tighten the hanger bracket screws and make sure the outlet box is secured.
5. Your wire connectors may be rattling against the fan's canopy.
6. Make sure you have a cUL/UL approved outlet box and it is installed correctly.

My Fan is Wobbling

1. Tighten the setscrews in the downrod.
2. Make sure your hanger ball assembly is locked into place in the hanger bracket.
3. Tighten the hanger bracket screws to the outlet box.
4. Make sure the fan blades are properly aligned and securely fastened to the motor housing assembly/blade arms.
5. Make sure the gaps between the blades are evenly distributed or make sure you are using an approved cUL/UL listed outlet box and it is installed correctly.

My Fan is not producing Enough Air Movement

If possible, please consider using a longer than included downrod.

My remote or wall control is not controlling my fan

Verify that the fan is receiving power by power cycling the fan.

To do this:

1. Cut power to the fan via standard On/Off wall switch, or the breaker if standard wall switch is not applicable.
2. Wait at least 10 seconds, and then restore power.
3. The fan will power on in Pairing mode for 3 minutes.
4. Press and hold and buttons on control for 10-15 seconds.
5. When the LED indicator remains solid green, and three (2) audible beeps are heard, the pairing process is complete.

I don't see my fan's WiFi (ModernFormFan_XXXXXX) in my phone's list of available WiFi networks.

1. If your fan had been previously paired the Wi-Fi radio will be off.
2. To turn on Wi-Fi, press and hold fan speed up and fan speed down buttons on your remote control or wall control for 6 seconds.
3. The fan will beep and you will see its Wi-Fi network available for connection.

My home Wi-Fi network is not showing up in the app's list during setup.

1. Your fan supports connection with 2.4GHz 802.11b/g/n networks. Confirm your network is compatible by checking your router settings or contact your router manufacturer.
2. Make sure your network's SSID is not hidden.
3. Your fan does not support 5 GHz network connectivity.connection.

13. Troubleshooting cont.

My Fan failed to join the Wi-Fi network

1. Make sure you entered the correct Wi-Fi password and your mobile device is connected to the same network you attempted to connect the fan.
2. Make sure you are within the router manufacturer's specified range. If all of these steps have failed - please power cycle your fan and router and retry.

What is power cycling and how do I power cycle my fan?

Power cycling is the act of temporaily removing the power source for your fan. If the fan is powered through a wall switch, turn the switch off for 10 seconds and back on. Alternately, you can use the circuit breaker the fan is connected to by toggling it off for 10 seconds and back on. If your fan is wired through a Modern Forms wall control (P/N: F-WCBT-WT) pull the Air-Gap Switch on your wall control, wait 10 seconds, and re-insert.

What is Adaptive Learning?

Adaptive learning is an exclusive feature that allows your fan to learn your daily/weekly habits and automatically recommend scheduled activity through the Modern Forms app. This feature can be toggled on or off.

What is Breeze Mode?

Breeze Mode mimics the natural ebb and flow of winds in nature by fluctuating your fan's speed.

What is Pairing?

Pairing is the process of connecting your Modern Forms remote or wall control to your fan. Your fan comes pre-paired to your included remote control. However, if you want additional controls for your fan or if you're replacing a control, refer to the pairing and unpairing section of the instructions.

What is a Factory Reset?

Factory Reset is a restore of the fans original settings. This can be achieved from the control or by pressing and holding the small button on the receiver until you hear three audible beeps or by holding down the fan toggle, light toggle, and season toggle buttons on your paired remote or wall control for 10 seconds.

NOTE: You may need to re-pair your remote or wall controls to the fan following a factory reset. A factory reset will also disconnect the fan from your home Wi-Fi network and will require you to add the fan using the Modern Forms Smart Fans app.

Please refer to the FAQ section of our app for further guidance. For all other questions, please contact our dedicated Fan Support specialists. Contact information can be found at the front of the instructions.

Certificate of Warranty

Congratulations on your new purchase.

Your new Modern Forms Smart Fan is engineered to make life easier every day. Modern Forms creates future-forward fans and luminaires that provide energy savings and outstanding efficiency. Our dedication to doing things the right way goes beyond our love for amazing products. Modern Forms Smart Fans™ warrants any of its outdoor rated ceiling fan products that they are to be free from defects in material and workmanship for a period of one (1) year from the date of purchase; outdoor painted finishes are warranted for two (2) years; LED light modules and electronic components are warranted for five (5) years; DC motors and stainless steel finishes are warranted for lifetime under normal use to the first non-dealer purchaser.

Although Modern Forms uses the best available materials and does extensive testing for finish endurance, some fading or chalking may occur and is considered normal. For coastal locations, some corrosion and/or deterioration is considered "normal wear" in this environment. Therefore, any finish claim due to coastal environment conditions is not applicable to our warranty. If a product is defective, all efforts will be made to correct the problem in the field. If the problem cannot be resolved, an RGA number will be issued. Modern Forms obligation is expressly limited to repair or replacement, without charge, at the Modern Forms factory after prior written return authorization has been granted. Modern Forms obligation under this warranty shall not extend beyond the distributor's initial purchase price of the product and accordingly any consequential damages or labor costs arising out of a defect are expressly excluded. This warranty shall not apply to products that have been altered, improperly installed, mishandled or misused. Notice of a defect in writing must be received by Modern Forms within five (5) years from the date of purchase (or according period of time as outlined by material). Excluded from warranty are any 3rd party component which carries its own manufacturer's warranty. Note: Modern Forms product warranty applies only to purchases from authorized Modern Forms distributors. THERE ARE NO WARRANTIES WHICH EXTEND BEYOND THE DESCRIPTION ON THE FACE HEREOF INCLUDING WARRANTIES OF MERCHANTABILITY AND FITNESS FOR A PARTICULAR PURPOSE. The Bluetooth ® word mark and logos are registered trademarks owned by Bluetooth SIG, Inc. and any use of such marks by Wangs Alliance Corporation is under license. Other trademarks and trade names are those of their respective owners.

Felicidades por tu nueva compra.

Su nuevo ventilador moderno de formas modernas está diseñado para facilitarle la vida cada día. Modern Forms crea ventiladores y luminarias para el futuro que proporcionan ahorros de energía y eficiencia excepcional. Nuestra dedicación a hacer las cosas de la manera correcta va más allá de nuestro amor por los productos asombrosos. Modern Forms garantiza a cualquiera de sus productos para ventiladores de techo con clasificación exterior que estén libres de defectos en materiales y mano de obra por un período de un (1) año desde el fecha de compra; Los módulos de luz LED están garantizados por cinco (5) años; Los motores de CC y los acabados de acero inoxidable están garantizados de por vida bajo el uso normal para el primer comprador no distribuidor.

Aunque Modern Forms utiliza los mejores materiales disponibles y realiza pruebas exhaustivas para la resistencia del acabado, puede producirse cierto desvanecimiento o parloteo y se considera normal. Para las ubicaciones costeras, cierta corrosión y / o deterioro se considera "desgaste normal" en este entorno. Por lo tanto, cualquier reclamación de acabado debido a las condiciones del entorno costero no se aplica a nuestra garantía. Si un producto es defectuoso, se harán todos los esfuerzos para corregirlo. El problema en el campo. Si el problema no se puede resolver, se emitirá un número RGA. La obligación de Modern Forms se limita expresamente a la reparación o el reemplazo, sin cargo, en la fábrica de Modern Forms después de que se haya otorgado una autorización previa por escrito.La obligación de Formas modernas bajo esta garantía no se extenderá más allá del precio de compra inicial del producto por

parte del distribuidor y, en consecuencia, cualquier daño consecuencial o costo de mano de obra que surja de un defecto se excluye expresamente. Esta garantía no se aplicará a los productos que hayan sido alterados, instalados incorrectamente, mal manejados o mal utilizados. La notificación de un defecto por escrito debe ser recibida por Modern Forms dentro de los cinco (5) años a partir de la fecha de compra (o según el período de tiempo indicado en el material). Quedan excluidos de la garantía todos los componentes de terceros que tengan la garantía de su propio fabricante. Nota: la garantía del producto Modern Forms se aplica solo a las compras de los distribuidores autorizados de Modern Forms. NO HAY GARANTÍAS QUE SE EXTIENDAN MÁS ALLÁ DE LA DESCRIPCIÓN DE SU CARACTERÍSTICA, INCLUIDAS LAS GARANTÍAS DE COMERCIABILIDAD Y ADECUACIÓN PARA UN PROPÓSITO PARTICULAR. La marca denominativa y los logotipos Bluetooth ® son marcas registradas propiedad de Bluetooth SIG, Inc. y cualquier uso de dichas marcas por parte de Wangs Alliance Corporation se realiza bajo licencia. Otras marcas comerciales y nombres comerciales pertenecen a sus respectivos propietarios.

Félicitations pour votre nouvel achat.

Votre nouveau ventilateur intelligent Modern Forms est conçu pour vous simplifier la vie au quotidien. Modern Forms crée des ventilateurs et des luminaires d'avant-garde qui permettent des économies d'énergie et une efficacité exceptionnelle. Notre engagement à bien faire les choses va au-delà de notre amour pour les produits étonnants. Modern Forms garantit à tous ses produits pour ventilateurs de plafond pour extérieur qu'ils ne doivent présenter aucun défaut de matériau ou de fabrication pendant un (1) an date d'achat; Les modules d'éclairage à LED sont garantis pendant cinq (5) ans; Les moteurs à courant continu et les finis en acier inoxydable sont garantis à vie dans les conditions normales d'utilisation par le premier acheteur non revendeur.

Bien que Modern Forms utilise les meilleurs matériaux disponibles et effectue des tests approfondis pour l'endurance de la finition, des décolorations ou des craies peuvent se produire et sont considérés comme normaux. Pour les zones côtières, une certaine corrosion et / ou détérioration est considérée comme une «usure normale» dans cet environnement. Par conséquent, toute réclamation liée à la finition en raison des conditions de l'environnement côtier ne s'applique pas à notre garantie. Si un produit est défectueux, tous les efforts seront déployés pour y remédier. Le problème sur le terrain. Si le problème ne peut pas être résolu, un numéro RGA sera attribué. L'obligation de Modern Forms est expressément limitée à la réparation ou au remplacement, sans frais, dans l'usine de Modern Forms après autorisation écrite préalable du retour. L'obligation de Modern Forms au titre de cette garantie ne s'étendra pas au-delà du prix d'achat initial du produit par le distributeur. En conséquence, tout dommage indirect ou tout coût de main-d'œuvre résultant d'un défaut est expressément exclu. Cette garantie ne s'applique pas aux produits modifiés, mal installés, manipulés ou utilisés de manière inappropriée. Modern Forms doit recevoir un avis écrit du défaut dans un délai de cinq (5) ans à compter de la date d'achat (ou selon la période précisée dans les informations fournies). Sont exclus de la garantie tout composant tiers bénéficiant de la garantie du fabricant. Remarque: la garantie des produits Modern Forms ne s'applique qu'aux achats auprès des distributeurs agréés Modern Forms. IL N'Y A AUCUNE GARANTIE QUI ALLAIT AU-DELÀ DE LA DESCRIPTION FACE AU PRESENT, INCLUANT LES GARANTIES DE QUALITÉ MARCHANDE ET D'ADÉQUATION À UN USAGE PARTICULIER. La marque et les logos Bluetooth ® sont des marques déposées appartenant à Bluetooth SIG, Inc. et toute utilisation de ces marques par Wangs Alliance Corporation est sous licence. Les autres marques et noms commerciaux appartiennent à leurs propriétaires respectifs.

MODERN FORMS SMART FANS

FR-W2204-58

modernforms.com