LeaperKim

User Manual

Sherman-L

Catalogue

1、Overview of the User Manual 3

2、Description of Product 4
- 2.1 Function Schematic 4
- 2.2 Product Size Drawing 5
- 2.3 Specification 6
- 2.4 Packing List 7

3、Function Introduction 8
- 3.1 Suspension Introduction 8
- 3.2 Left and right Side Battery Pack 9
- 3.3 Riding Mode Settable 10
- 3.4 Button Volume Settabl 11
- 3.5 Low Battery Mode 12
- 3.6 High Speed Mode 13
- 3.7 Angle Protection 14
- 3.8 Error Codes and Cause 15
- 3.9 Display Introduction 16
- 3.10 Display Function Overview 17
- 3.11 Usage Notice 19

4、Maintenance 21

5、Warranty 22

1、Overview of the User Manual

Thanks for purchasing LeaperKim electric unicycle. We will wholeheartedly provide you with satisfactory products and services.

This vehicle is strictly prohibited to drive on the motorway. It must be confirmed that it meets the requirements of local laws and regulations. Do not use this product in the areas prohibited by laws and regulations. Do not use this product at the speed specified by local laws and regulations.

In order that you can ride the LeaperKim electric unicycle more safely, please carefully read and understand all the product information and precautions listed in this manual before riding, and refer to the instruction to operate LeaperKim electric unicycle.

Please maintain the vehicle regularly, which will help to keep the performance and resale value of the vehicle product.

Please keep this manual for future after-sales use.

Your satisfaction with the Leaper Kim electric unicycle is our driving force!

Guangzhou Coyote Intelligent Equipment Co., Ltd

2. Description of Product

2.1 Function Schematic

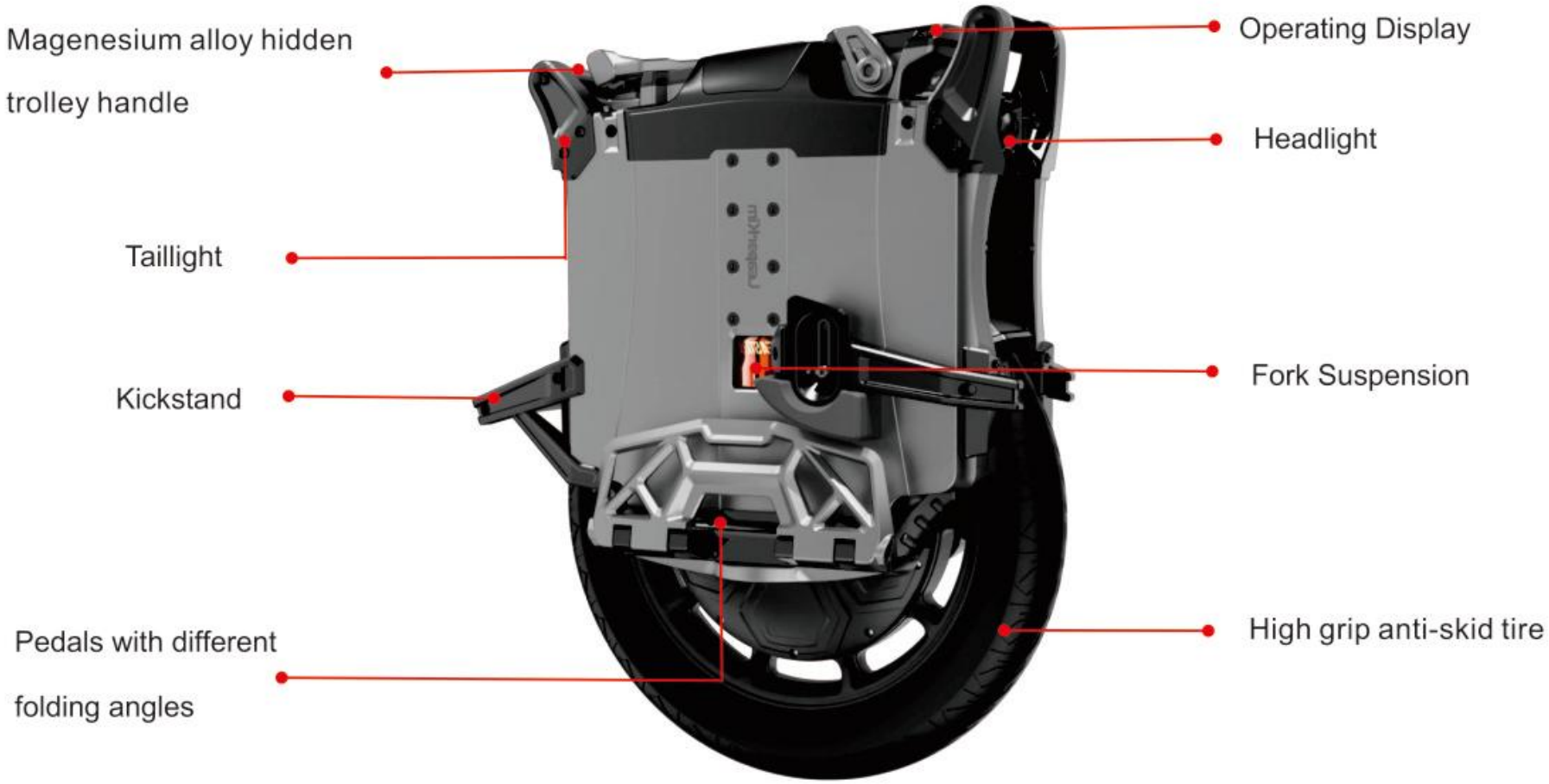

2.2 Product Size Drawing

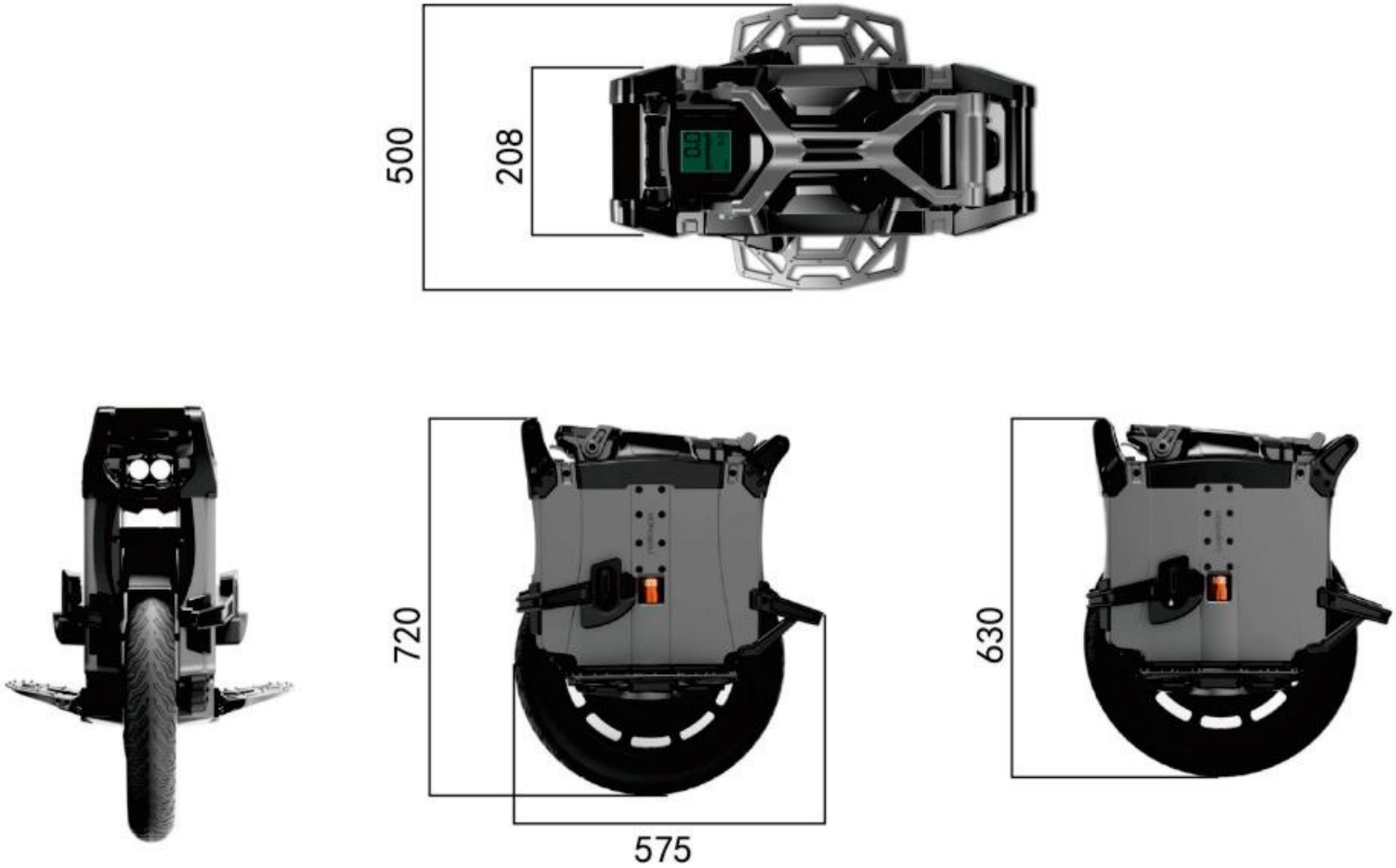

2.3 Specification

Product Specification	
Model Name	Sherman-L
Safe Speed	19kmh
Motor Power	Rated power 3200W, peak power 8000W
Battery	Samsung NR21700-50G/Samsung INR21700-50S,151.2V
Operating Temperature	-10°C～80°C
Max Load	120kg
Charger	151.2V , 5A
Charge Time	6h (5A), 3h (10A)
Color	Black
Dimension and Weight	
Dimension	575mm*208mm*720mm
Net weight	46.5kg
Hardware	
Suspension	Mid-mounted normal suspension,preload adjustable,travel range 90mm.
Pedal	120mm*300mm, magnesium alloy material.
Control Board	Double layout control board,aluminum plat, 36pcs mosfets,support max 840A curert.
Motor	Magnesium alloy motor rim,thicker and wilder motor cover.
Tire size	2.75-14
Trolley hardle	Magnesium alloy hidden trolley handle.
Dis play	Show speed,volage,mileage,mode,battery status etc.
Charge Port	Dual charge ports support max 15A.
Headlight	2500lm 20W double bens headlgiht.
Taillight	Turning, braking warning light.
IP Rated	IPX6

Software	
Fault self-inspection	High temperature alarm of left and right battery pack, left and right battery pack over voltage alarm, left and right battery pack discharge alarm, charging current exceeding setting value alarm, motor Hall alarm,vehicle high temperature alarm, etc.
Angle Protection	Front and back tilt to 68,the left and right tilt can be set to 35~75 through display.
Riding Model	Riding hardness value could be set from 0%—100% through dis play.
Power Tilt- back	Pow er tilt-backvalue could be s et from 30%—100%through dis play.
Speed Tilt-back	Speed tilt-back value could be set from 10kph-200kph through dis play.
Speed Alarm	Speed alarmvalue could be set from 10kph200kph through dis play.
Button Volume	Button volume value could be set from 0~100% through display.
Low Battery Mode	Could be sw itch on through dis play.
High Speed Mode	Could be sw itch on through display.
Smart BMS	Inspecting each senes of cells,6 zones of temperature inspection, displaying current,ect.
Low Voltage Potection	A larm at 117V ,tilt back at 113.4V.Alarm at 109.8V ,tilt back at106. 2v(low voltage mode].
Temperature Alarm	Alarm at 85°C(upper control board), Alarm at 105C (dow n board).
Other Functions	Multiple functions adjustable,supports data log.
Hall Eror Fixment Algorithm	Inspect Hall error and fix it w ith algorithm to make wheel continue balancing.
Smart Field Weakening to Speed up	Increase speed safety margin through sof tw are algorithm.
Motor Anti Blocking Rotation	Blocking motor ratation will not demage motor or contraller.
No Hall Emergency Mode	Even without Hall it can be continue riding in flat city.
APP	
Vehicle Inf ormation	Vehicle speed, voltage, distance and battery inf ormation view able.
Vehicle Setting	Vehicle mode changing, calibration, PWM s eting, speed tilt: -back setting, speed alarm setting ect.

2.4 Packing List

Packing list			
No.	Description	Unit	Qty
1	Unicycle	PCS	1
2	Charger	PCS	1
3	User Manual	PCS	1
4	Vehicle Information Card	PCS	1

3. Function Introduction

3.1 Mid-mounted normal suspension

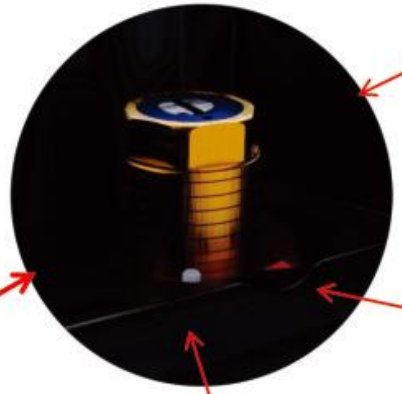

1. S-C-F Adjust compression damping;
2. S-R-F Adjust rebound damping;
3. Rotate the slotted screwdriver in the direction of "+" to increase the damping.

1. Spring preload adjustment;
2. The 18mm wrench is rotated in the "+" direction to increase the preload;
3. The scale marks on the left / right sides shall be consistent.

1. Turn on pressure relief valve to release pressure inside shock.
2. After that tight up the valve to avoid water ingress and shock-absorbing oil spray.

Function Introduction:

- Compression 18 clicks.
- Rebound 18 clicks.
- 12mm preload adjustable.
- Pressure relief valve.

3.2 Left and right Side Battery Pack

Left Side Battery Pack Function Introduction:

- Long pressing OK button and release until display showing'In bl'to enter left side battery pack mode.
- Press switch button to check voltage value of each series of cells.
- Press switch button to check the temperature of 6 zones of cells groups.
- Press switch button to check battery running data-log.
- SSet running background time to perform battery balancing.

Right Side Battery Pack Function Introduction:

- Long pressing 'OK'button and release until display showing'In br' to enter left side battery pack mode.
- Press switch button to check voltage value of each string of cells.
- Press switch button to check the temperature of 6 zones of cells groups.
- Press switch button to check battery running data-log.
- SSet running background time to perform battery balancing.

3.3 Riding Mode Settable

Function Introduction:

- Long pressing 'OK' button and release it until display showing 'in set', pressing 'OK' to plus and minus the hardness values, value ranges from 0%-100%.
- The smaller the value, the softer it will be.

3.4 Button Volume Settable

Function Introduction:

- Long pressing 'OK'button and release until display showing'In br' to enter left side battery pack mode.
- Press switch button to check voltage value of each string of cells.
- Press switch button to check the temperature of 6 zones of cells groups
- Press switch button to check battery running data-log.
- Set running background time to perform battery balancing.

3.5 Low battery mode

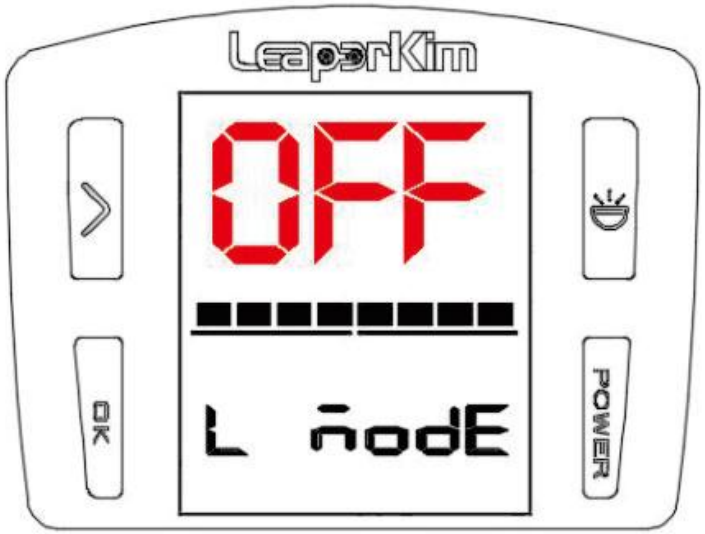

Function Introduction:

- Long pressing 'OK' button and release it until display showing .'L mode', pressing 'OK' to switch on and off. The smaller the value, the softer it becomes.
- OFF mode: Alarm when voltage is below 117V, and tilk-back when voltage is below 113.4V.
- ON mode: Alarm when voltage is lower than 109.8V, and warping plate when voltage is lower than 106.2V.

3.6 High Speed Mode

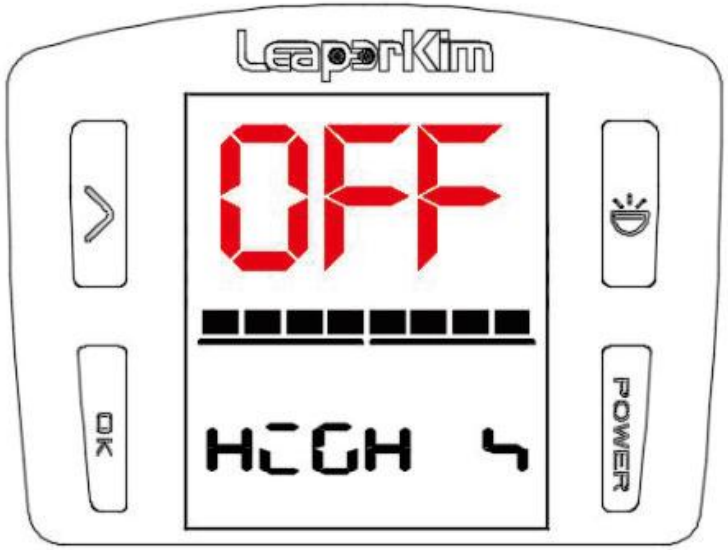

Function Introduction:

- Long pressing 'OK' button and release it until display showing 'High S', pressing 'OK' to switch on and off. The smaller the value, the softer it becomes.
- OFF mode: Maximum free-spin speed of 105 km/h;
- ON mode: Maximum free-spin speed of 125 km/h;

3.7 Angle Protection

Function Introduction:

- Long pressing 'OK' button and release it until display showing 'Ang pt', pressing 'OK' to enter setting, values from 35°-70°.
- The larger the value, the greater tilt angle will be.

3.8 Error codes and causes

NO	Code	Cause	Remark
1	br tEA	Right battery pack high temperature alarm	
2	bL tEA	Left battery pack high temperature alarm	
3	bt LoY	Battery pack over alarm	
4	u HIGH	Battery pack high-voltage alarm	
5	E CHAr	Charging current exceeds the set point	
6	E HALL	Motor hall error alarm	
7	t HIGH	Controller high temperature alarm	

3.9 Display introduction

1. Switch page
2. In mileage page, long pressing it to clear mileage

1. Confirm
2. Long pressing 2s to enter setting mode
3. Long pressing 4s to enter advance mode
4. Long pressing 6s to enter data log
5. Long pressing 8s to enter left side pack mode
6. Long pressing 10s to enter right side pack mode

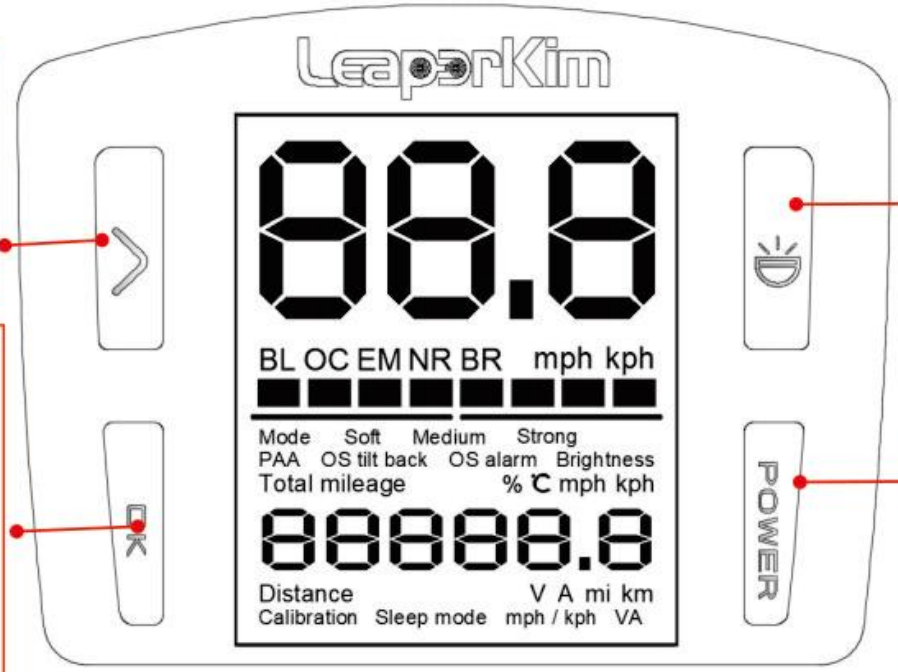

Headlight

1. Long pressing to power on/off wheel
2. Taillight power button

3.10 Display Function Overview

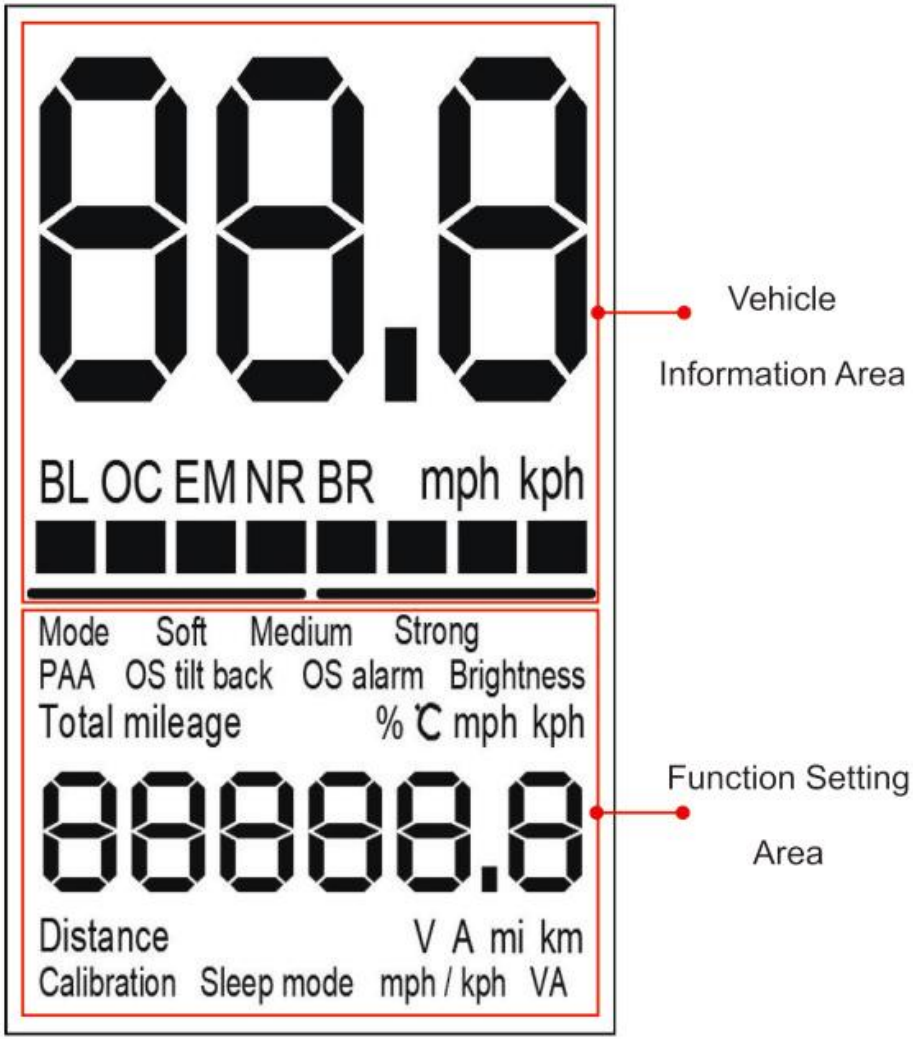

Vehicle Information Area		
Icon	Meaning	Specification
88.8	Speed	On: Overcharged
BL	Left side battery pack	Flash:over discharge Off: normal
OC	Over current warning	Off: normal
EM	Motor error	Off: normal
NR	Motor stall	Off: normal
BR	Right side battery pack	On:Overshoot Flash: over discharge Off: normal
mph	Mile/h	
kph	Km/h	
■■■■■■	Capacity	
— —	Left and right battery communication situation	on: normal Flash: signal lost

3.10 Display Function Overview

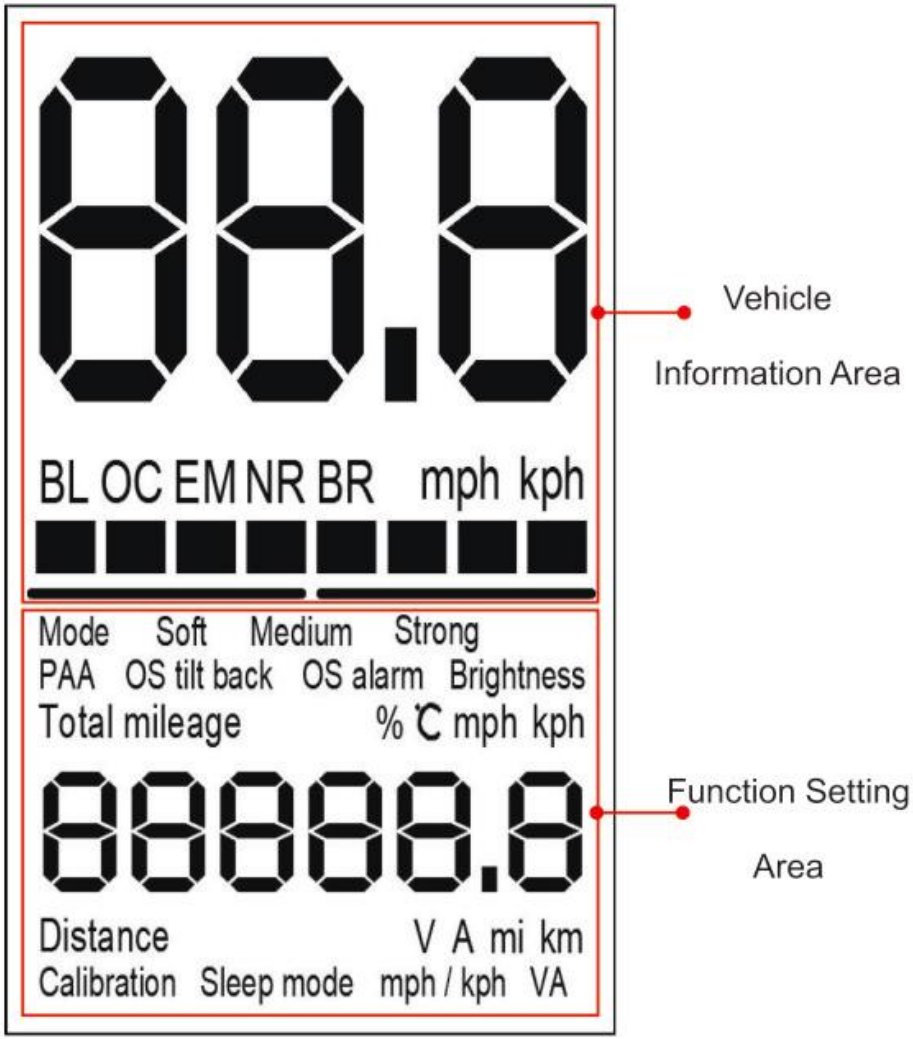

Function Setting Area

Icon	Meaning	Specification
Mode	Riding mode setting	Showing and setting the riding mode
Soft	Soft mode	
Medium	Medium mode	
Strong	Strong mode	
PAA	Balance slight adjustment	Show and set the default horizontal angle of the pedal
OS tilt back	Over-speed rocker	Show and set speed of tilt back
OS alarm	Over-speed alarm	Show and set speed of alarm
Brightness	Brightness setting	Set the brightness of the screen
Total	Total mileage	
%	Percent	
℃	Celsius degree	current temperature of control board
mph	Mile/h	Mile/hour
kph	Km/h	Km/hour
88888.8	Speed data	Speed display
Distance	Distance	Total miliage since last reset
V	V	Battery voltage
A	A	Motor phase current
mi	Mile	Mile
km	Km	Km
Calibration	Calibration	
Sleep mode	Sleep mode	
mph/kph	Kilometre	
VA	Voltage trim	Voltage slightly adjustable

3.11 Usage Notice

The following persons are prohibited from riding this product:

1. Persons who are under the influence of drugs or alcohol and have limited mobility and reaction ability. Or people with hypertension, cardiovascular and cerebrovascular diseases or other high-risk diseases.
2. Minors under 14 years old, pregnant women, mentally ill and the elderly over 60 years old.

Do not carry out any dangerous

It is forbidden to drive at high speed or accelerate sharply when the battery is low.

No jumping or riding on one foot

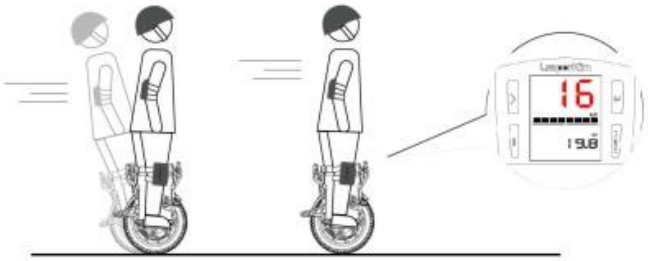

No reversing or speeding

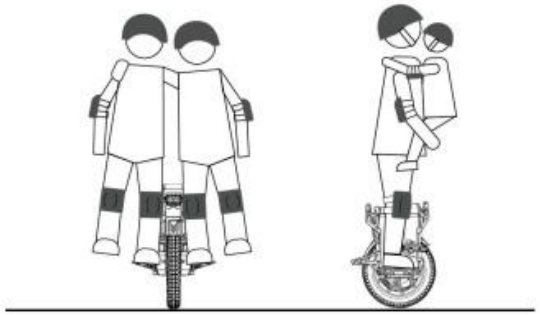

No manned riding

3.11 Usage Notice

Do not carry out any dangerous

Please control the speed reasonably where there are people or obstacles, and prohibit speeding.

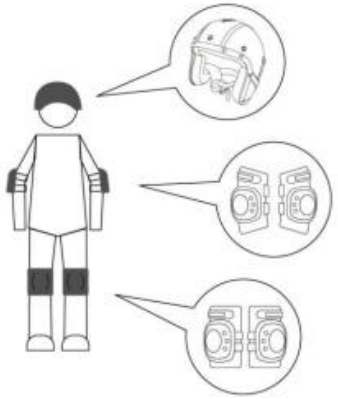

Please wear helmets, knee pads, elbow protectors, gloves and other protective equipment before using this product.

● This product is not allowed to be disassembled or repaired by un-professional personnel. If the machine is disassembled by oneself, the product warranty service will no longer be enjoyed.

● If the vehicle makes alarms, please stop riding it immediately and sent to the professional maintenance point for maintenance in time.

● Please carefully read and understand all the product information and precautions listed in this manual and follow the use behavior suggested in this manual to avoid unnecessary loss and injury, otherwise you need to bear all the consequences arising therefrom.

●During the production or sales of this product, design changes and further improvement will be carried out continuously. In case of any discrepancy with this manual, please refer to the actual product.

4、Maintenance

- Use this product frequently, and check whether the screws are loose on time.
- Check the tire pressure on time. The suggested pressure is 2.5-3.0bar.
- Better to put the vehicle in the dry area.
- Charge the battery to full charge at least once every two months.
- Avoid recharging when the battery is completely exhausted.
- Avoid placing the battery in the environment which is above 50 ℃ or below - 20 ℃.
- It is prohibited to use chargers other than the standard charger for charging.
- It is forbidden to immerse this product in water and wash it with high-pressure water gun.

5、Warranty

NO.	Items	Warranty time
1	Controller, motor	24 month
2	Battery packs	18 month
3	Charger	6 month

The following conditions are not covered by the warranty and need to pay for maintenance.

- The validity period of three guarantees has expired.
- Damage caused by human factors.
- Damage caused by force majeure.
- All kinds of damage caused by failure to use, maintain and transform according to the requirements of the user manual.
- Failure or damage caused by forced use of this product beyond normal conditions.
- The product has been disassembled or maintained by personnel not authorized by our company.
- Malicious damage to warranty content and vehicle body information.

FCC Warnning:

This equipment has been tested and found to comply with the limits for a Class B digital device, pursuant to part 15 of the FCC Rules. These limits are designed to provide reasonable protection againstharmful interference in a residential installation. This equipment generates, uses and can radiateradio frequency energy and, if not installed and used in accordance with the instructions, maycause harmful interference to radio communications. However, there is no guarantee thatinterference will not occur in a particular installation. If this equipment does cause harmfulinterference to radio or television reception, which can be determined by turning the equipmentoff and on, the user is encouraged to try to correct the interference by one or more of thefollowing measures:

- Reorient or relocate the receiving antenna.
- Increase the separation between the equipment and receiver.
- Connect the equipment into an outlet on a circuit different from that to which the receiver is connected.
- Consult the dealer or an experienced radio/TV technician for help.

Caution: Any changes or modifications to this device not explicitly approved by manufacturer could void your authority to operate this equipment.

This device complies with part 15 of the FCC Rules. Operation is subject to the following two conditions:

(1)This device may not cause harmful interference, and (2) this device must accept any interference received, including interference that may cause undesired operation.

This equipment complies with FCC radiation exposure limits set forth for an uncontrolled environment. This equipment should be installed and operated with minimum distance 0cm between the radiator and your body.

Manufacturer: Guangzhou Coyote Intelligent Equipment Co., Ltd.

ADD: Part 1 of 3rd floor, No. 45-2, Northern Industrial Road, Xinlou village, Baiyun District,

Guangzhou, China

Tel: +86 13751045466

Email: support@leaperkim.com