PRORUN®

GARDEN CULTIVATOR ATTACHMENT

MODEL: PPA400

Operator's Manual

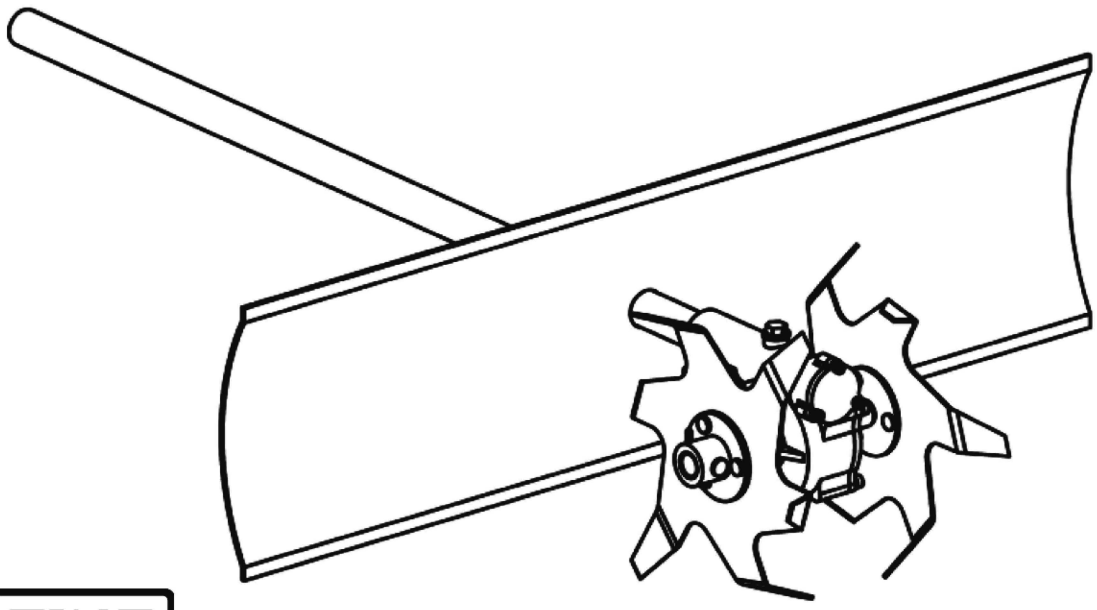

Everything PRORUN

Before operating, read the instructions.

⚠ **IMPORTANT - READ CAREFULLY BEFORE USE**

⚠ **IMPORTANT SAFETY INSTRUCTIONS – SAVE THESE INSTRUCTIONS**

WARNING: To reduce the risk of injury, the user must read and understand the Operator's Manual before using this product. Save these instructions for future reference.

Please let us know what you think.
To leave a review and see our full line of products, visit:

proruntech.com ★★★★★
1-844-905-0882, info@proruntech.com

Version: B - Issue Date: 2023/03/31

EN

CONTENS

HOW TO READ THE MANUAL

⚠WARNING Certain paragraphs in the manual contain particularly significant information and are marked with various levels of highlighting with the following meaning:

NOTE or IMPORTANT

These give details or further information on what has already been said, and aim to prevent damage to the machine or cause other damage. Non-observance will result in the risk of serious injury or death to oneself or others.

Contents 1
Getting to know the machine 1
1. Information of symbols 1
2. Identification 2
3. Conecting the tube 3
Safety regulations 4
1. Important 4
2. Personal protective equipment 6
3. Machine′s safety equipment 6
Operating instructions 7
1. Installing the safety shield 7
2. Using the cultivator/tiller 7
3. Routine maintenance 6
4. Maintenance timescale 10
5. Storage and transportation 10
6. Diagnostics 11
Technical information 11

GETTING TO KNOW MACHINE

1. INFORMATION OF SYMBOLS



WARNING! A cultivator / tiller can be dangerous if used incorrectly or carelessly, and can cause serious or fatal injury to the operator or others. It is extremely important that you read and understand the contents of this owner's manual.



Please read the operator's manual carefully and make sure you understand the instructions before using the machine.



Always wear:

- Approved hearing protection and eye protection.



Always wear approved protective gloves.



Wear sturdy, non-slip boots.



The exhaust system, muffler shield and cylinder of this engine are hot when the engine is running or within a few minutes after the engine has stopped.Take care to avoid coming into contact with a hot surface.



Beware of the thrown objects. Keep bystanders and animals a safe distance from the machine.

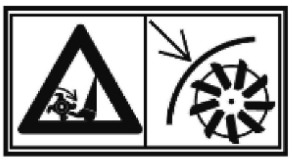

Keep safety shield in place at all times when knives are rotating. Avoid cutting your feet.

2. IDENTIFICATION

Components and Controls

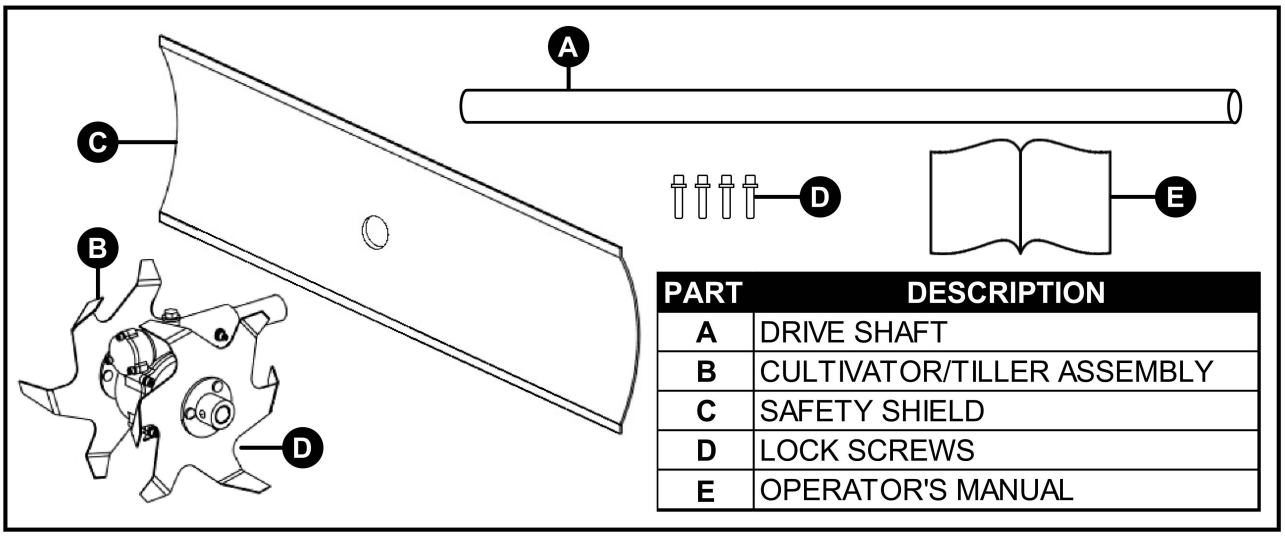

PART	DESCRIPTION
A	DRIVE SHAFT
B	CULTIVATOR/TILLER ASSEMBLY
C	SAFETY SHIELD
D	LOCK SCREWS
E	OPERATOR'S MANUAL

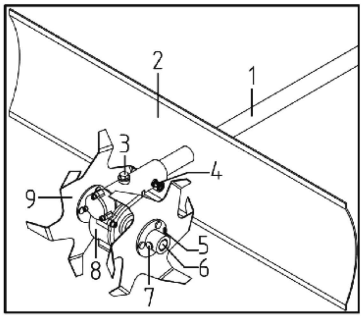

1 Drive shaft tube
2 Safety shield
3 Grease port cap
4 Position screw
5 Cotter pins
6 Output shaft
7 Locking pins
8 Gear box
9 Tines

3. CONNECTING THE TUBE

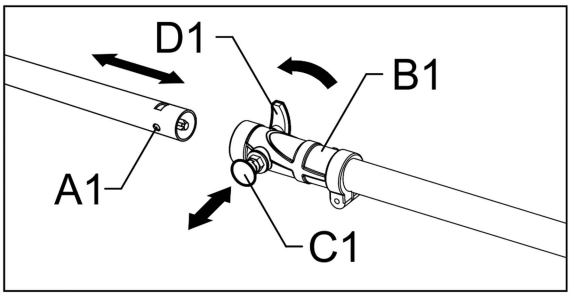

Connecting the attachment to the gas multi-tool powerhead

1.Align the round hole (A1) on the attachment's front tube and the lock pin (C1).

2.Pull the lock pin out while inserting the attachment tube into the connector (B1). Push the attachment tube to the end until the lock pin aligns with the round hole.

3.Release the lock pin, it will return to its original position automatically and insert itself into the round hole on the attachment tube.

4.Make sure the attachment's tube cannot be rotated after the lock pin is back to its original position.

5.Turn the lock knob (D1) clockwise to tighten the attachment tube securely.

Connecting the attachment to the cordless multi-tool powerhead

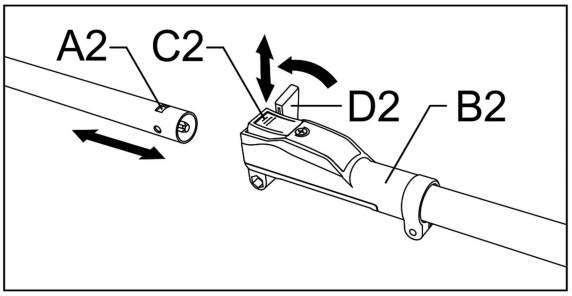

1.Align the rectangular hole (A2) on the attachment's front tube and the lock lever (C2).

2.Press down the lock lever while inserting the front tube into the connector (B2). Push the attachment tube to the end of the connector.

3.Release the lock lever, it will return to its original position automatically and insert the locking tab into the rectangular hole on the attachment tube.

4.Make sure the attachment's tube cannot be rotated after the lock pin is back to its original position.

5.Turn the lock knob (D2) clockwise to tighten the attachment tube securely.

SAFETY REGULATIONS

1) IMPORTANT

Please read the operator's manual carefully. Become familiar with the owner's manual before attempting to operate the equipment.
Long-term exposure to noise can result in permanent hearing impairment. So always use approved hearing protection.
Under no circumstances may the design of the machine be modified without the permission of the manufacturer.
Always use genuine accessories. Non-authorized modifications and/or accessories can result in serious personal injury or the death of the operator or others.
This machine can cause serious injuries if used incorrectly or carelessly, and can cause serious or fatal injury to the operator or others. It is extremely important that you read and understand the contents of this operator's manual.
Become familiar with all controls and proper use of the machine, including the correct handling, preparation, maintenance, starting and stopping of the machine.
Avoid operating while people, animals, especially children, are nearby. The machine operator must ensure that no people or animals come closer than 50 feet (15.25 meters) while working.
Keep firm footing and balance during operation, use the harness provided.
Grip the cultivator/tiller firmly with both hands. Never operate the cultivator/tiller with one hand.
Do not operate the cultivator/tiller on a slope that is too steep for safe operation. When on slopes, slow down and make sure you have good footing.
Always ensure that all handles are fitted when using the machine. Never attempt to use an incomplete machine or one fitted with an unauthorized modification.
Always use two hands to operate this machine.
While operating this machine, always ensure that the operating position is safe.
Always be aware of your surroundings and stay alert for possible hazards of which you may not be aware due to the noise of the machine.
Stop the engine before

- Cleaning or when clearing a blockage.
- Checking, carrying out maintenance or working on the machine.
- Leaving the machine unattended.

Don't overreach- Guide the cultivator/tiller at a walking pace only. Keep proper footing and balance at all times.
Before starting the cultivator/tiller make sure the tines are not touching any object and are free to move.
Always ensure a correct working posture. The operator should schedule sufficient rest periods and changing working positions.
Never use the machine if you are tired, if you are ill, if you have consumed alcohol, or if you are taking medication that could affect your vision, your judgement or your coordination.

The cultivator/tiller may bounce upward and/or jump forward if the tines strike extremely hard packed soil, frozen ground, or buried obstacles such as large stones, roots or stumps.
Do not operate the cultivator/tiller near underground electrical cables, telephone lines, pipes or hoses.
If the cultivator/tiller strikes a foreign body, turn it off immediately, wait for the tines to stop and check for damage. If necessary, repair before restarting. Tines do not stop immediately after the engine is turned off.
If the cultivator/tiller starts to vibrate abnormally, turn it off immediately and check for the cause. Vibration is generally a warning of trouble.
Risk of injury. Do not put hands, feet or any body part or clothing near the rotating tines.
Wear personal protective equipment. See instructions under the heading “Personal protective equipment”.
Never use a machine that has been modified in any way from its original specification.
Never use a machine that is faulty. Carry out the checks, maintenance and service instructions described in this manual. See instructions under the heading “Routine maintenance”.
Disconnect the spark plug cap from the spark plug and take the following steps:

- Inspect for damage.
- Check for, and tighten, any loose parts.
- Have any damaged parts replaced or repaired with manufacturer approved parts.

All covers, guards and handles must be fitted before starting. Ensure that the spark plug cap and ignition lead are undamaged to avoid the risk of electric shock.
Never allow children or people unfamiliar with these instructions to use the machine.
Local laws can restrict the minimum age of the operator.
Secure the machine during transport to prevent loss of fuel, damage or injury.
CLEANING AND MAINTENANCE BEFORE STORAGE :
Alert! National regulations (Occupational Safety and Health, environment) may be present, which can restrict the use of the machine.
Daily inspect the machine before use and after dropping or other impacts to identify any significant defects.
During a working day, you should take frequent and adequate breaks to prevent damage from vibration and damage to the ears.
Check the idle speed, if the tines rotate with the engine running at idle speed, stop the engine immediately. Next, the the carburettor idle setting must be checked.

⚠WARNING **This machine produces an electromagnetic field during operation. This field may under some circumstances interfere with active or passive medical implants. To reduce the risk of serious or fatal injury, we recommend persons with medical implants to consult their physician(s) and the medical implant manufacturer before operating this machine.**

The exhaust gases emitted from engine contain dangerous carbon monoxide. Running an engine in a confined or badly ventilated area can result in death due to asphyxiation or carbon monoxide poisoning.
Prolonged exposure to vibrations can cause injuries and neurovascular disorders (also called "Raynaud's syndrome" or "white hand"), especially to people suffering from circulation disorders. The symptoms can affect the hands, wrists and fingers and are shown through loss of sensitivity, torpor, itching, pain and discolouring of or structural changes to the skin. These effects can be worsened by low ambient temperatures and/or by gripping the handgrips excessively tightly. If the symptoms occur, the length of time the machine is used must be reduced and a doctor consulted.

2) PERSONAL PROTECTIVE EQUIPMENT

IMPORTANT! You must use approved personal protective equipment whenever you use the machine. Personal protective equipment cannot eliminate the risk of injury but it will reduce the degree of injury if an accident does happen. Listen out for warning signals or shouts when you are wearing hearing protection. Always remove your hearing protection as soon as the engine stops.

HEARING AND EYE PROTECTION: Wear hearing protection that provides adequate noise reduction. Always wear approved eye protection.
GLOVES: Gloves should be worn when necessary, e.g., when fitting or repairing tines.
BOOTS: Wear boots with steel toe-caps and non-slip sole. Do not operate the equipment while barefoot or when wearing sandals or similar lightweight footwear. Wear protective footwear that will protect your feet and improve your footing on slippery surfaces.
CLOTHING: Wear clothes made of a strong fabric and avoid loose clothing that can catch on twigs and branches. Always wear heavy, long pants. Do not wear jewellery, shorts sandals or go barefoot. Secure hair so it is above shoulder level.
FIRST AID KIT: Always have a first aid kit nearby.

3) MACHINE′S SAFETY EQUIPMENT

The safety shield is intended to prevent loose objects from being thrown towards the operator. The safety shield also protects the operator from accidental contact with the tines.
Check that the safety shield is undamaged and not cracked. Replace the safety shield if it has been exposed to impact or is cracked.
Never use the cultivator/tiller without the safety shield. Make sure that the safety shield is in the correct position, failure to do this can cause serious personal injury.

EN

OPERATING INSTRUCTIONS

1) INSTALLING THE SAFETY SHIELD

Insert the aluminum tube into the safety shield and through the clamp. Be sure that the clamp is on the opposite side of the tiller tines. Use the limit marker to position the tube.

Use four bolts and nuts to tighten the safety shield securely in place.

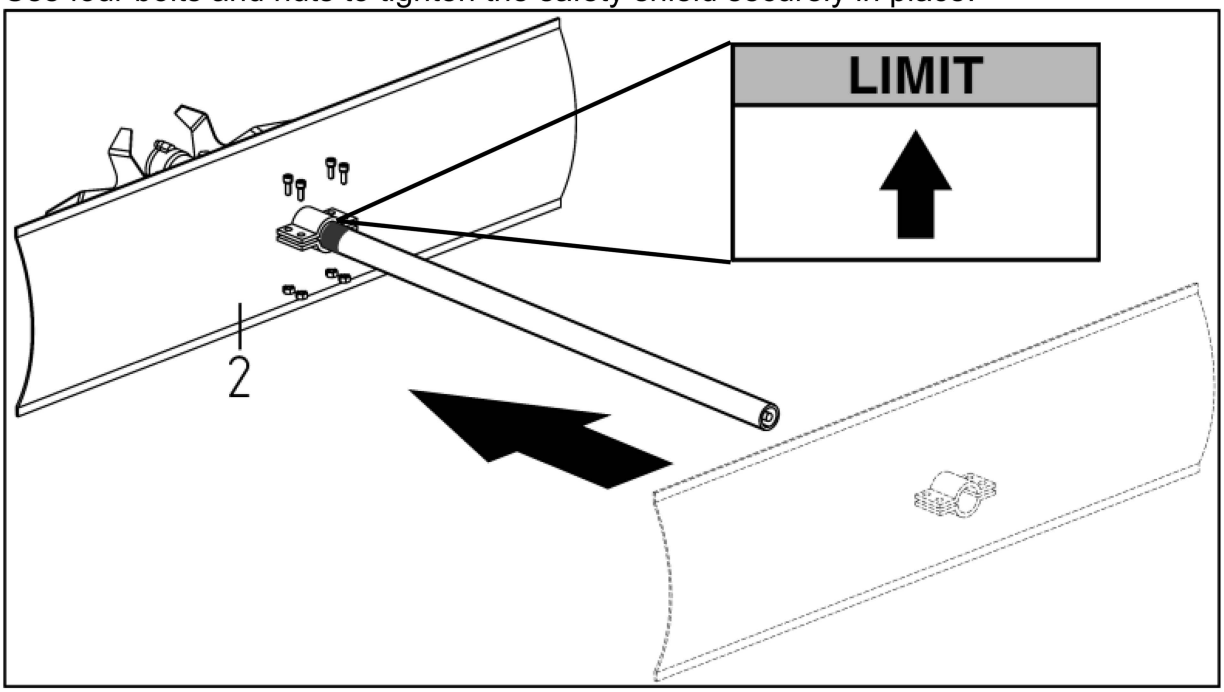

2) USING THE CULTIVATOR/TILLER

⚠WARNING **The engine produces dangerous carbon monoxide, a poisonous, colorless odorless gas that can cause death or serious injury. Do not operate the machine in unventilated spaces, such as greenhouses.**

Avoid all usage which you consider to be beyond your capability.

Use the cultivator/tiller for breaking sod, preparing seed beds, and for cultivating gardens and flower beds. The cultivator/tiller can also dig small holes for planting saplings or potted plants.

For breaking sod or deep tilling, allow the tines to pull the cultivator/tiller forward to the end of your arm's reach, then firmly pull it back toward yourself. You will achieve the best results by repeatedly allowing it to move forward and pulling it back.

By pulling the cultivator/tiller back towards yourself, the tines will dig deeper and more aggressively.

NOTE: To prevent tripping, take extra precautions when moving backwards and when pulling the cultivator/tiller back toward yourself.

If the cultivator/tiller digs deep enough to stay in one spot, gently rock it side to side until it starts moving forward again.

When working on inclines always stand diagonally to the incline to retain a firm, safe footing. Do not work on extremely steep slopes.

For preparing seedbeds, we recommend using one of these tilling patterns:
Tilling Pattern A– Make two passes over area to be tilled, the second at a right angle to the first.
Tilling Pattern B– Make two passes over area to be tilled, the second overlapping the first.

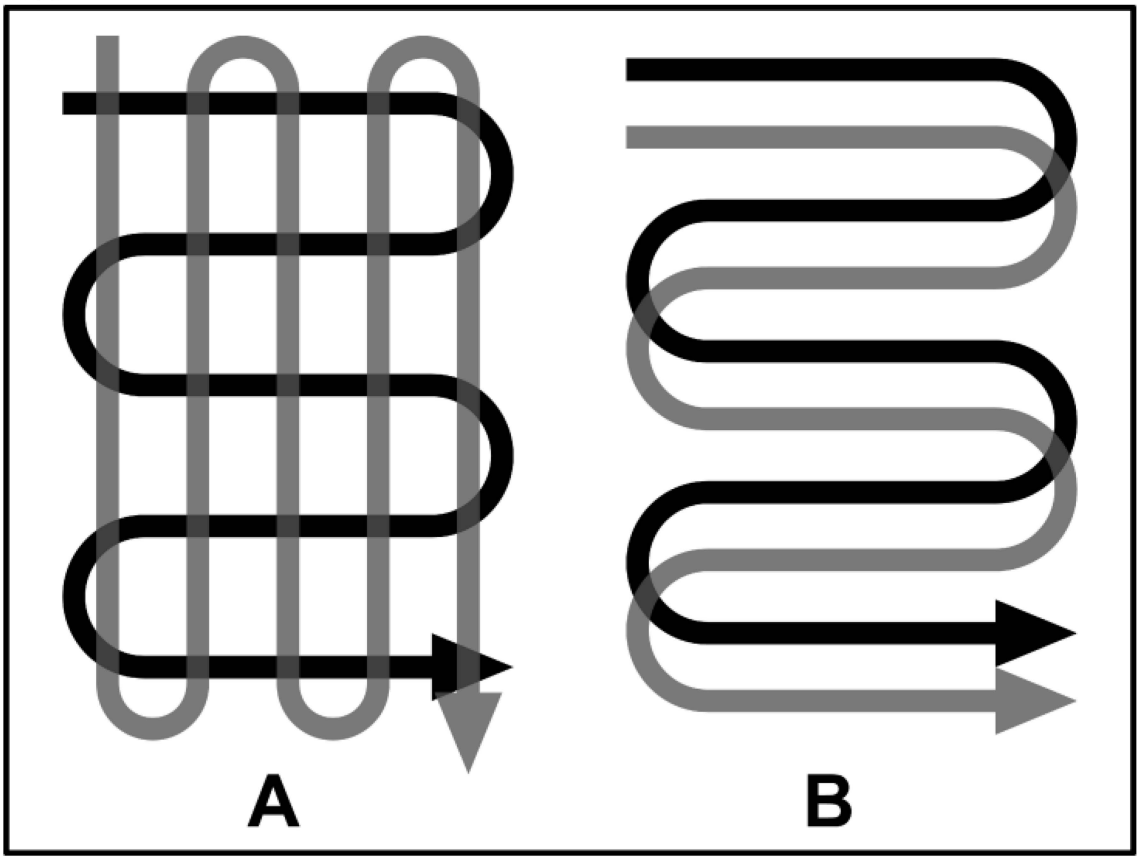

Before use, remove any visible stones or other foreign bodies from the area.
NOTE: Before moving the cultivator/tiller from one area to another, stop the engine and wait for the tines to come to a complete stop. Be careful not to let the tines touch the ground while moving the cultivator/tiller. The tines, as well as the unit itself, may be damaged even if the engine is stop.
CLEARING FOREIGN OBJECTS:
During operation a stone or root could become lodged in the tines, or tall grass or weeds may become wrapped around the tines. Before clearing the tines, stop the engine and wait for the tines to come to a complete stop. Dislodge or remove the foreign matter from the tines.

3) ROUTINE MAINTENANCE

⚠WARNING **Wear gloves and use caution when cleaning or performing maintenance on the cultivator/tiller.**
Always turn off the engine and wait until the tines come to a complete stop before carrying out any maintenance or repairs.
A blunt tine increases the vibration level.
Daily check the condition of the tines and ensure that all cotter pins locking pins are

securely fixed. If the tines become bent, twisted, cracked, blunt, broken or damaged, sharpen or replace them. Contact PRORUN Customer Service for assistance.
NOTE: Always clean the cultivator/tiller after each use. Failure to carry out proper cleaning can result in damage to the cultivator/tiller or result in poor performance. Clean the tines with a scrub brush, and a soft cloth dampened with a mild soap and water mixture.
Never use a water hose to clean the cultivator/tiller! To remove soil and debris from the tines, use a stiff brush or a dampened cloth. Once cleaned, wipe the tines dry and apply a light coat of oil to prevent rust.
Worn tines invite poor performance and an overload of the engine. Check tines before each use. Sharpen or replace the tines with new ones when necessary.

3.1 Tine Replacement

NOTE: Replace only with the genuine parts.
Remove the cotter pin (5) with a pair of pliers, and then remove the locking pin (7). Remove the tines (9) off from the output shaft.

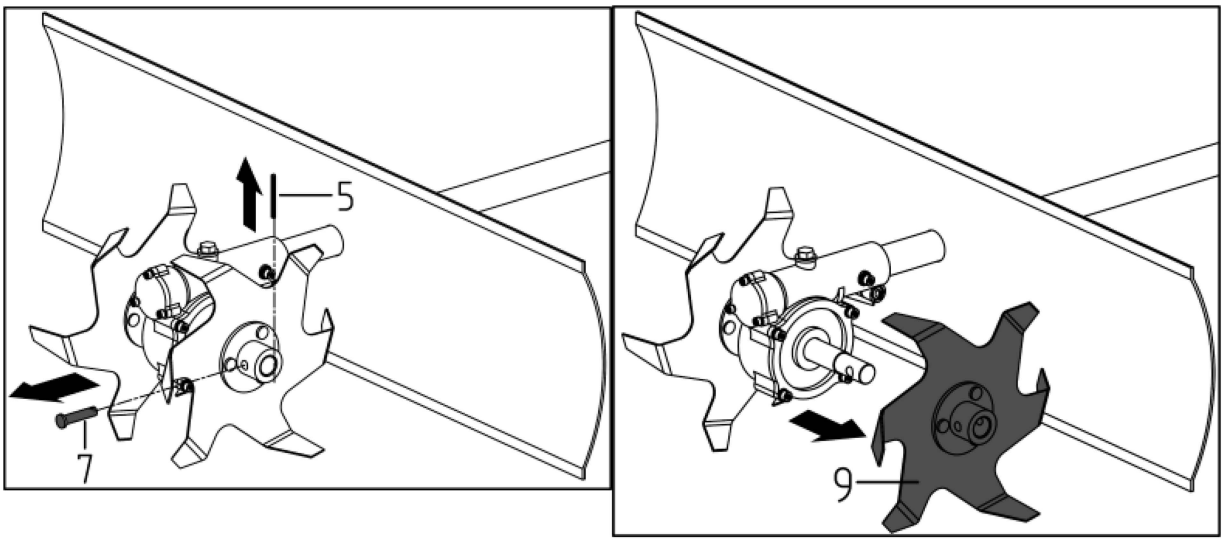

Install a new tines onto the cultivator/tiller according to the reverse steps of the above steps.

3.2 Gear box

The gear box is filled with the right quantity of grease at the factory. Check the grease level regularly. Remove the grease port screw (3), and then use a grease pump to feed the grease into the gear box if necessary.

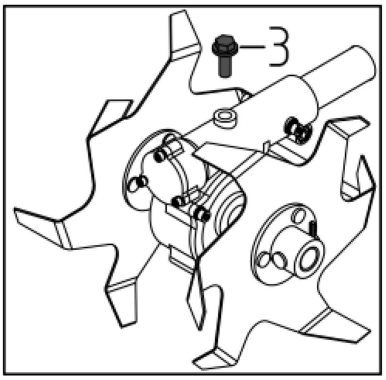

4) MAINTENANCE TIMESCALE

The following intervals apply to normal operating conditions only. If your daily working time is longer or operating conditions are difficult (very dusty work area, etc.), shorten the specified intervals accordingly.		Before starting working	After finishing work daily	After each refueling stop	Weekly	Monthly	Every 12 months	If problem	If damaged	If required
Complete machine	Visual inspection (condition, wear, leaks)	*								
	Clean		*							
Gear box	Feed grease						*	*		*
Tines	Clean		*					*		*
	Replace								*	
Cotter pins	Check	*						*		
	Replace							*	*	*
Safety shield	Check	*	*							
	Replace								*	
Locking pins	Check	*				*		*		
	Replace								*	*
All accessible screws	Check	*				*		*		
	Retighten									*

1) Contact PRORUN Customer Service with service questions or to purchase replacement parts.

5) STORAGE AND TRANSPORTATION

At the end of the season, or if the cultivator/tiller is not being used for longer than a month, wipe over all metal surfaces with an oil impregnated cloth to protect them from corrosion or spray with a fine coat of oil.
During extended periods of storage, ensure that the cultivator/tiller is protected against corrosion and rust.
Store the cultivator/tiller in a dry, clean area out of reach of children.
Do not expose to rain. Store indoors.

6) DIAGNOSTICS

Problem	Source of problem	Corrective action
Abnormal noises	Tine is jammed	Stop the engine. Wait till tines comes to a complete stop. Remove jammed objects.
	Lubrication running out	Refeed the grease into the gear box. (3.2)
	Bolts, nuts or other components are loose.	Tighten all components. Arrange for repair if noises continue.
Abnormal vibrations	Tines damaged or worn	Replace damaged or worn tines. (3.1)
	Working depth too large	Adjust working depth.
Poor results	Working depth too small	Adjust working depth.
	Worn tines	Replace damaged or worn tines. (3.1)

TECHNICAL INFORMATION

Technical data	Unit	PPA400
Weight	lbs.(kg)	7.28 (3.3)
Diameter of tines	inches (mm)	8.85 (225)
Max. working depth	inches (mm)	2.0 (50)
Working width	inches (mm)	7.0 (180)
Gear ratio		1:33

Specifications are subject to change without notice.

PRORUN / TOPSUN USA
200 Overhill Drive, Suite A
Mooresville, NC 28117
Proruntech.com
info@proruntech.com
Phone: 1-844-905-0882

Zhejiang Zhongjian Technology Co., Ltd
Web: www.topsunpower.cc
E-mail: sales@topsunpower.cc
ADD: No.155 Mingyuan North AVE, Economic Development Zone,
Yongkang, Zhejiang, 321300, P.R.China
Made In China