amerikooler®
TAKING COOL FURTHER™

INSTALLATION MANUAL

575 East 10th Avenue, Hialeah, Florida 33010

Fax: (305) 884-8330 | **Tel:** (305) 884-8384 | **Toll Free:** 1 (800) 627-5665

TABLE OF CONTENTS

Introduction 2

Product Safety 3

- Certifications 4

Types of Units 5-7

- Overview 5
- Features & Finishes 5-7

Materials and Equipment 8-9

- Provided Materials 8
- Additional Materials and Equipment 9

Drawings and Panel Labels 10-11

- Drawings 10
- Panel Labels 11

Shipping Inspection 12-13

Installation Preparation and Unpacking 14-17

Cooler and Freezer Installation 18-27

- Overview and Drawings 18-19
- Unit Assembly with Floor 20-22
- Unit Assembly Floorless 23-27

Evaporator and Condenser Installation 28-36

Powering the Unit 37-38

Unit Start-Up 39-41

Additional Installations 42-51

Installation Best Practices 52-53

Troubleshooting & FAQ 54-64

- Troubleshooting 54-58
- FAQ 59-64

INTRODUCTION

Welcome to the Amerikooler Installation Manual

Here you will learn the steps to properly install Amerikooler walk-in coolers and freezers. You will learn about the materials and equipment used for installation, best practices, common troubleshooting scenarios, and more.

Every installation job is unique. From cooler configuration and box size, to job site and working space, no two installations will ever be exactly the same. One of your many responsibilities as an installer is to adapt easily and safely without ever compromising the integrity of the box you're working on. In this manual you will be guided through the installation of a "Combo Unit", which is a unit that has both a cooler/refrigerator as well as a freezer, and you'll be learning the basic principles and techniques needed to successfully execute an installation.

PRODUCT SAFETY

At Amerikooler, we're dedicated to exceeding expectations in product quality and safety. Here are some of the key factors that set us apart:

- **Professional Engineering Practices:** Utilizing professional engineering principles, we conduct thorough research, development, and prioritize user safety in the creation of our products.
- **Adherence to Industry Standards:** Our products are meticulously designed to meet or surpass industry performance and safety regulations.
- **Manufacturing Excellence:** Our manufacturing process strictly adheres to professional standards in purchasing, production, and quality control to ensure consistent product reliability and safety.
- **Stringent Testing Protocols:** Every product undergoes comprehensive reviews and professional testing, focusing on function, reliability, and overall safety.
- **Transparent Representation:** Information provided in our advertising and product literature is presented in an informative and factual manner to assist customers in making informed product selections.
- **Comprehensive Documentation:** Our products come with clear and complete installation, operation, and maintenance instructions, ensuring prolonged and satisfactory performance.

Safety Considerations:

Prevent Slip Hazards: Keep the walk-in floor free of items that may cause slipping, such as spilled liquids, food particles, or moisture. Maintain a clean and dry floor surface at all times.

Regular Inspections: Regularly inspect non-skid floor strips on ramps and floor surfaces, replacing them if worn. Check the refrigeration system, door gaskets, and hardware to prevent moisture on the walk-in floor, ceiling, or walls.

Limit Entry Door Exposure: Avoid leaving entry doors open for more than five minutes, as this can lead to excessive condensation. Vinyl strip curtains can be used to reduce the entry of warm moist air and mitigate potential issues on the walk-in floor, ceiling, and walls.

We reserve the right to enhance and modify our products without prior notice, and without incurring any obligation for modifications on previously manufactured items.

AMERIKOOLER CERTIFICATIONS

ASTM International, ASTM C272M-18 Hydrophobic Insulation Extruded Polystyrene (XPS) Gray

Department of Energy (DOE) Compliant, (Title 10 CFR 431.306) & (ASTM C518)

US Federal Requirements (EISA), 2009 Meets and exceeds the federal requirements of the Energy Independence & Security Act with R-29 coolers and R-32 for freezers.

National Sanitation Foundation (NSF) International
Compliance with NSF standard #7. Authorized to bear the NSF mark.

State of Oregon
Licensed/registered as provided by law of the State of Oregon as an approved manufacturer of structural insulated panels.

City of Houston, Texas (Certificate No.694) Certified and approved under provisions of section 17010.1 of the Houston Building Code as fabricator of Exterior Coolers and Freezers.

Underwriters Laboratory (UL) Listed Panels and Doors Standard 723, Edition 11, 2018 ANSI Approved: 2023

City of Los Angeles Department of Building and Safety Approval for Refrigeration Panels for Walk-in Coolers and Freezers. Research Report: RR 26189 Approval Number: CSI #13030

Florida Building Code Hurricane Approved, #FL22413R2 &#FL22413R3

Miami-Dade County, Florida, Hurricane Approved, NOA#22-0914.05

TYPE OF UNITS

In this section we will briefly review 3 different types of units you may install as a certified installer.

While the complexity and specifications of an installation may vary based on the types, sizes, and customizations of a unit, the basic principles you will learn in this manual will apply to installing any type of unit.

1 QUICK SHIP UNITS

Amerikooler Quick Ship Units are walk-in coolers that come in 9 standard sizes with the door centered on any wall. Quick Ship Units are generally available for faster manufacturing and delivery.

2 COMBO UNITS

Amerikooler Combo Units, are walk-in coolers that include both a refrigeration box as well as a freezer. Combo Units are available in any size. They are custom-made to meet the specifications of the available space at the jobsite.

3 CUSTOM UNITS

Amerikooler Custom Units are exactly that - Custom!
From small spaces requiring exact dimensions, to whole warehouses and convenience stores with glass doors that require complete refrigeration, and more. Amerikooler is your go-to partner to engineer, manufacture, and deliver walk-in coolers and freezers that meet whatever your specific requirements may be.

STANDARD FEATURES

Airtight Joints

Our time-tested, corrosion resistant cam action locking panel fasteners, along with a factory installed NSF compliant compression gasket, form rigid, airtight joints between panels.

4" Thick AK-XPS4 Polystyrene Foam Insulation

Amerikooler panels are manufactured with Dupont's extruded foam insulation and has a 50 year R-value warranty. They meet and exceed the EISA Energy Act of 2009 and DOE R-value testing for compliance requirements starting July 1st, 2017.

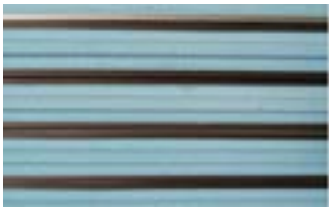

Modular Panel Construction

Our plant uses state-of-the-art robotic manufacturing for precise wall, floor, and ceiling panels. Assembly is easy with corrosion-resistant fasteners and an NSF-compliant gasket, ensuring airtight joints.

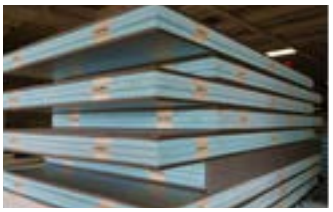

Deadbolt Keyed Handle Latch

The door includes a heavy deadbolt keyed pull handle with key lock with inside safety release.

Digital LED Thermometer

A digitial LED Thermometer (F of C) is provided, with an On/Off pilot light switch.

TYPE OF UNITS

Spring Actuated Door Close

A door closer is provided for extra positive smooth closing.

Spring Assisted Hinges

Two heavy duty, super cam-rise spring-assisted hinges come standard on all cooler and freezer doors.

LED Light Fixtures

The door jamb includes a LED light mounted on the center/top of the jamb.

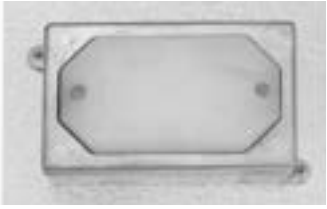

Heated Pressure Relief Vent

Freezer doors are equipped with a heated pressure relief vent mounted on the door jamb and a temperature controlled heater wire to ensure a positive frost free seal.

STANDARD FINISHES

- 26 Gauge Acrylume® Stucco Embossed Finish
- 26 Gauge Stucco Embossed Black Pre-Painted Galvanized Steel
- 26 Gauge Stucco Embossed White Pre-Painted Galvanized Steel
- 24 Gauge Smooth Stainless Steel

MATERIALS AND EQUIPMENT

INSTALLATION MATERIALS INCLUDED

Amerikooler provides all of the required installation materials for each order, but additional materials and equipment will be needed for each individual installation.

The following are installation materials that are provided as required for installation:

Cam Lock Hole Plugs

Installation Screws

Installation Anchors

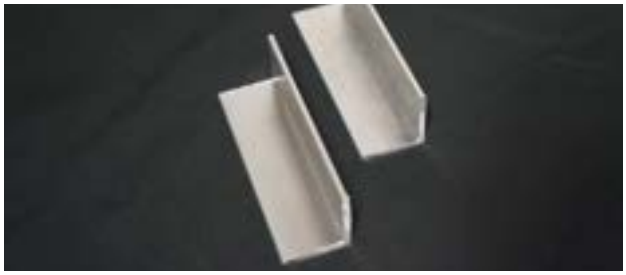

Angle Brackets

Allen Wrench

Installation Guide + Drawings

ADDITIONAL MATERIALS AND EQUIPMENT

The following are additional materials and equipment that are recommended for installation, as needed:

- Safety Glasses
- Screw Drivers
- Drill
- Mallet
- Ladder
- Box Cutter
- Pipe Cutter
- Level
- Gloves
- Hammer
- Socket Wrench
- Tape Measure
- Pipe Bender
- Shop Light
- Pliers
- Refrigerant
- Push Broom
- Vacuum Pump
- Wire Stripper
- Chalk Line Reel
- Volt Meter
- Welding Torch and Supplies
- Concrete Screws/ Anchors
- Fender Washers, Nuts + Bolts
- Silicone/Caulking

In some cases, larger equipment, such as scissor lifts, boom lifts, forklifts and cranes may also be used.

Crane

Scissor + Boom Lift

Forklift

DRAWINGS AND PANEL LABELS

OVERVIEW

With every Amerikooler installation you will make use of drawings and labels to properly assemble the unit. Understanding these documents will help to ensure a smooth installation.

DRAWINGS

The drawings will provide you with the layout of the unit. It also shows each panel number and the location where each panel should be installed. The drawings allow you to examine the space where the walk-in will be installed and make sure nothing interferes with the workspace when assembling the unit.

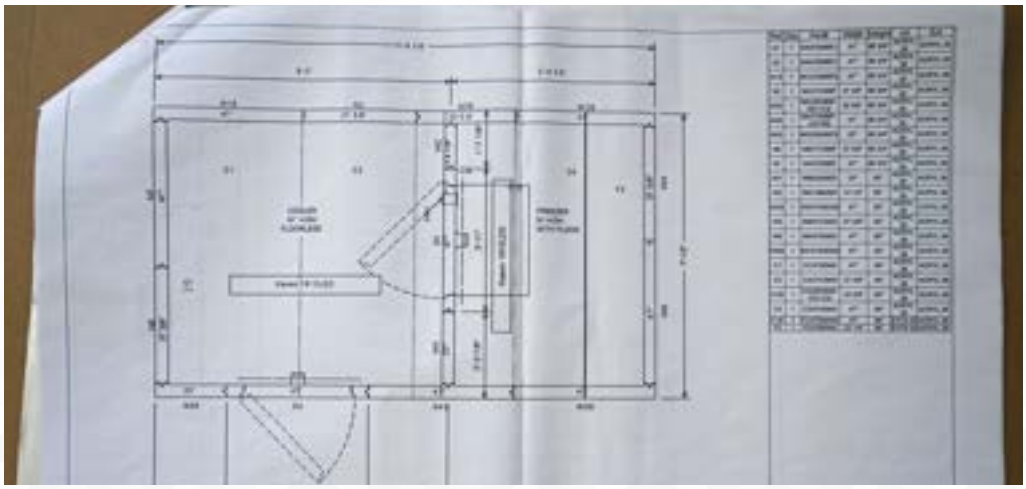

PANEL LABELS

Panel labels will allow you to identify each panel and panel type using the panel number at the bottom of the label. For example, the first letter of the panel number identifies if it will be a wall, ceiling, door or floor panel.

"W": Wall Panel with Floor
"F": Floor Panel
"D": Door
"N": Wall Panel NO Floor
"C": Ceiling Panel

Panel Label "W"

Panel Label "N"

Panel Label "F"

Panel Label "C"

Note:
If a panel starts with the letter "S" this means that it is a Stock Panel, and the second letter will then indicate the type of panel - either W, N, F, C or D.

SHIPMENT INSPECTION

In most cases, shipment will be handled by the customer when the shipment is received, to check for any visible damage or missing items. This will generally be re-checked by the installer when the shipment is unpacked to prepare for installation.

Step 1

Do a walk-around, to inspect the shipment.

Step 2

Locate the box of installation materials provided by Amerikooler, which will be included on a panel pallet.

SHIPMENT INSPECTION

Step 3

With the installation materials you will find your packing list. To ensure that all panels have been received, compare the packing list to the shipment by checking the labels on the panels.

Step 4

If any items are missing or any damage is found either during the shipment inspection or while unpacking the shipment to prepare for installation, the customer should contact Amerikooler Customer Service via email or phone for assistance at customerservice@amerikooler.net or (800) 627-5665 Ext. 669.

Note:
If shipping boxes or other protective materials are damaged, be sure to inspect the products inside to determine if the damage may only be superficial.

INSTALLATION PREPARATION AND UNPACKING

In this section you will learn the steps for installation preparation and unpacking.

Preparation of the area where the unit will be installed is important for proper installation.

The following are steps that should be taken prior to starting the assembly of the unit:

Note:
Any electrical configurations seen in this course prior to the section on powering the unit, which is performed by a licensed electrician, are only temporary for purposes of demonstration later in the manual.

Step 1

Locate the drawing of the unit, which you should find in the envelope inside the box of materials supplied with the shipment.

INSTALLATION PREPARATION AND UNPACKING

Step 2

Review the drawing and re-measure the area to ensure that it is large enough for the unit.

Note:
Be sure to include a clearance between the unit and building walls, of at least 2 inches.

Step 3

If the evaporator and condensing unit is remote, or you are installing an outdoor self-contained unit, check for the nearest drain accessibility. If no drain is present, a general contractor or Plumber should be contacted to add drainage prior to installation.

Step 4

Be sure that the floor is dry, has been swept, and is clear of any debris.

INSTALLATION PREPARATION AND UNPACKING

Step 5

Check that the floor is level, using your preferred method. This is a critical step to ensure that installation is successful, and that the unit functions properly after installation.

If any gaps appear between the floor and the level, mark any areas of the floor that are higher than 1/8 inch. A general contractor should be contacted to level the floor prior to installation.

Step 6

Unpack panels and organize into like groups: ceiling panels, wall panels, floor panels, etc. This could be done in stacks on the floor or against a wall. Take care when moving the panels as the aluminum dings easily.

INSTALLATION PREPARATION AND UNPACKING

Unpacking samples of each group of panels.

Note:
Notice how the different sections are separated by group and placed together to make assembly and organization easier.

COOLER AND FREEZER INSTALLATION

This section covers the installation process from start to finish including unit assembly, evaporator and condenser installation, and how to power and start up the unit.

By the end of this manual, you will understand their responsibilities and identify steps that require the expertise of licensed professionals like general contractors, electricians, or other technicians.

UNIT ASSEMBLY OVERVIEW

Our units are made up of modular floor, wall, and ceiling panels that are designed to fit together seamlessly.

We use industrial cam-lock technology to securely lock panels in place. This creates an airtight seal and a strong and sturdy unit.

Depending on the cooler or freezer design, a unit may be floorless, include a floor, or have a combination of both. To determine if the unit you are assembling is floorless or includes floor panels, you will refer to the installation drawing.

UNIT DRAWING

Sample Installation Drawing of Combo Unit

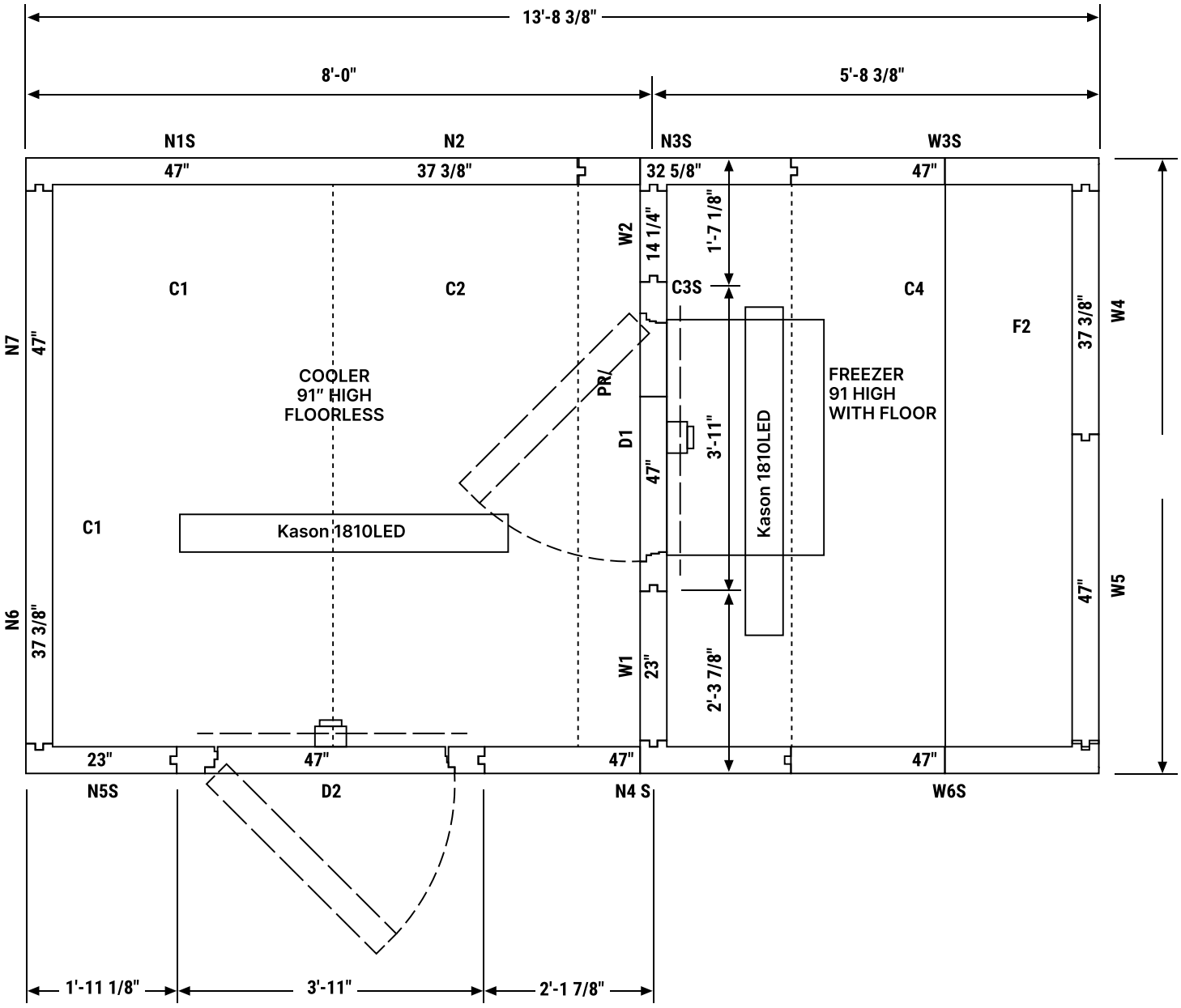

UNIT ASSEMBLY WITH FLOOR

In the section you will learn the steps to install a unit that includes floor panels. Regardless of type, all unit assemblies begin with the floor.

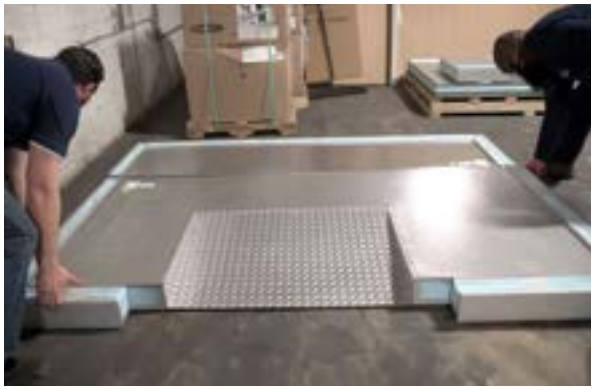

Step 1

Locate and place the floor panels together, starting with whichever end panel works best for your installation site.

Step 2

Using the Allen Wrench provided, loosely lock the floor panels in place, 1 panel at a time. **Do not** tighten completely, as this will create issues later when installing wall panels and ceilings. This will be done once the entire unit is assembled.

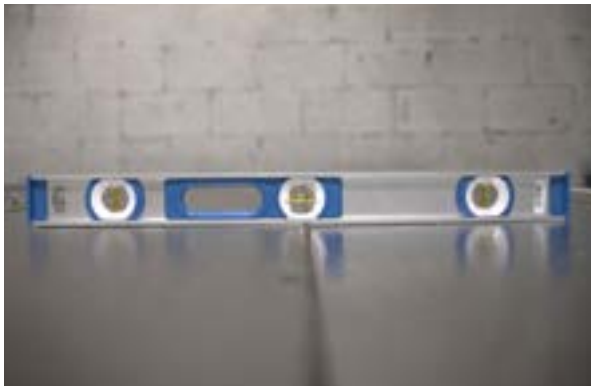

Step 3

Make sure that all floor panels are leveled.

UNIT ASSEMBLY WITH FLOOR

Step 4

To begin assembling the walls, start with two corner wall panels and secure them to start making a corner. When locking corner wall panels into place **DO NOT** tighten them completely, as this will create issues when installing the rest of the panels and ceiling.

Note:
When installing wall panels, always make sure that the top of each panel is flush with the one next to it.

Step 5

Select the next joining panels and continue installing the wall panels until you are able to place a ceiling panel, then install the ceiling panel(s), locking them to adjacent wall panels.

We call this “Assembling in Rings” - the pattern of installing walls, then ceiling, and repeating until the unit is fully assembled. We recommend following this pattern, when possible.

UNIT ASSEMBLY WITH FLOOR

Step 6

Once you reach the opening for the door, locate and move the door into position, and use the Allen key to tighten and lock the door in place, then continue assembling the unit.

Step 7

Once the entire unit is assembled, make sure every cam-lock is tightened on wall, ceiling, and floor panels, then cover the holes with the cam lock hole plugs that were provided.

UNIT ASSEMBLY FLOORLESS

In this section you will learn the steps to assemble a floorless unit.

As you learned in the previous section, all unit assemblies begin with the floor, this is still true with units that do not have any floor panels. However, instead of panels, you will prepare and lay your vinyl screeds, which will secure your wall panels to the existing floor.

Note:
When installing a unit, like this combo, which has one compartment with a floor and one that is floorless, always begin with the compartment with the floor first before moving onto the floorless part of the unit.

Step 1

When installing a floorless unit, first, use a chalk line to mark the installation area to the dimension of the walk-in as shown in the drawing.

Step 2

Locate your vinyl screeds.

Step 3

Place the vinyl screeds on the floor according to the unit drawing, and make sure they are square by measuring diagonally from corner to corner.

Step 3 Note:
Vinyl screeds come with extra length so that they may be trimmed and/or angle cut in the field, as needed.

Step 4

Apply a bead of silicone under the screeds before putting them in place for each wall panel and door.

Step 4 Note:
All vinyl screeds should be secured to the existing floor under all walls and door frame legs using appropriate screws and/or anchors. Depending on the job and jobsite conditions, you may choose to do this under the panels before placing them, or on the sides of the screeds (on the interior or exterior of the unit) after the panels are in place.

Step 5

To begin assembling the walls, start with two corner wall panels and secure them to start making a corner. In this example, our first corner includes the partition wall between the freezer and cooler, so we will continue the assembly from there.

Remember, when locking wall panels into place **DO NOT** tighten them completely, as this will create issues when installing the rest of the panels.

Step 5 Note:
When installing wall panels, always make sure that the top of each panel is flush with the one next to it. If needed, install shims under vinyl screed corners and across, to ensure support of the panel joints and levelness of the panels.

Step 6

Continue “Assembling in Rings”, as you learned in the previous section. Remember, this means you will select the next joining panels and continue installing the wall panels until you are able to place a ceiling panel, then install the ceiling panel(s), locking them to adjacent wall panels, and repeat.

Step 7

Before placing the door, you will need to place vinyl screeds under the door frame legs.

To do this:

1. Measure and cut the vinyl screed for the door to size.
2. Apply silicone under the screed, and put in place.
3. Move the door into position, and lock it . in place using the Allen key.

Step 8

Once the entire walk-in is assembled, make sure every cam-lock is tightened on wall, ceiling, and floor panels, then cover the holes with the cam lock hole plugs that were provided.

Step 9

Finally, install the aluminum angle brackets that were provided on the interior side of the door jamb and into the existing floor. This will support the door when closing and absorb a lot of the vibration from direct impact with the wall panel.

To do this:

1. First, secure the angle bracket to the interior frame of the door with Tek Screws; These will be included in the installation materials provided by Amerikooler when required.

2. Next, secure the angle bracket to the floor. Be sure to do this with the door closed to ensure that the door sits evenly.

*Also applies to perimeter brackets for outdoor units.

EVAPORATOR AND CONDENSER INSTALLATION

Now, we will begin the evaporator and condenser installation, then work with a general contractor and/or licensed electrician to complete the process.

On the next pages, you will learn about the required steps for this process.

EVAPORATOR AND CONDENSER INSTALLATION

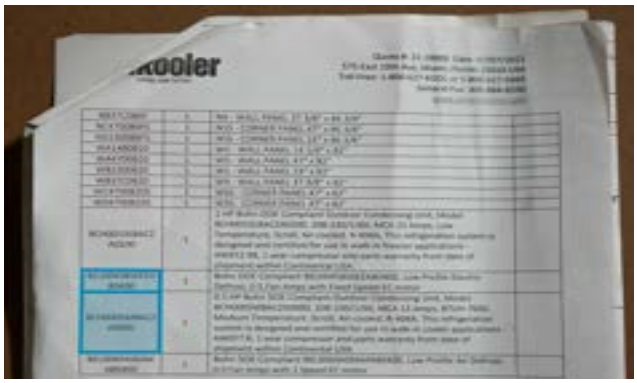

Step 1

Start by verifying that the model numbers of the evaporator and condenser matches the numbers on the packaging list included with the unit drawing.

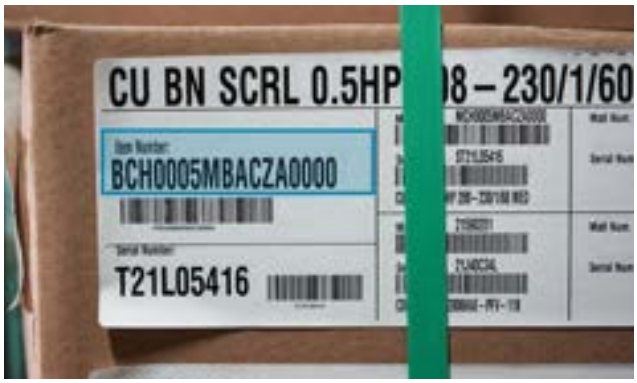

Step 2

Uncrate the evaporator and check to make sure the unit is not damaged.

EVAPORATOR AND CONDENSER INSTALLATION

Step 3

Create a template using the coil or use the coil itself to mark the ceiling where you'll hang the evaporator.

Step 4

Measure to position the evaporator to the proper distance from the wall, based on the manufacturer specifications, then drill your holes.

EVAPORATOR AND CONDENSER INSTALLATION

Step 5

Next, install the support brackets to hang the evaporator.

Step 5 Note: You may cut your brackets to size.

Step 6

Hang the evaporator using fender washers, nuts, and bolts to secure it in place. It is recommended to start with the back bolts first.

Step 6 Note: Not supplied by manufacturer

Step 7

Next, make penetrations on the walk-in walls or ceilings, as needed, in order to bring the refrigeration line sets in the evaporator.

EVAPORATOR AND CONDENSER INSTALLATION

Step 8

Now, uncrate and inspect the condensing unit to ensure it is not damaged.

Step 9

Remove the bolts to release the condensing unit from the pallet.

Step 10

Set the condensing unit in place.
It is recommended to use a condenser stand, as needed, to keep the condensing unit off the floor or surface. Remove the bolts to release the condensing unit from the pallet.

Step 10 Note:
Depending on the size of the unit and where it it being placed, it may require the use of a crane.

EVAPORATOR AND CONDENSER INSTALLATION

Step 11

When using a condenser stand:

1. First, adjust the stand to fit the condensing unit.
2. Then, secure the condensing unit in place on the stand with bolts.
3. Finally, secure the stand to ground with bolts.

*Not Included

Step 12

Determine the distance needed for the piping of the evaporator and condeser, then cut and bend the pipe accordinly.

EVAPORATOR AND CONDENSER INSTALLATION

Step 13

Install the refrigerator line with insulation.

Step 13 Note:
There should be a sound of air release when cutting the pipe in the evaporator to connect the lines. This release let's you know that there is no leak in the coil.

Step 14

Secure the bulb to the suction line with the bulb clamp kit provided.

Step 14 Note: Included on standard units with mounted components.

EVAPORATOR AND CONDENSER INSTALLATION

Step 15

If needed, install a line jack in the opening of the building where the pipes will run through and continue to the evaporators.

Step 15 Note:
Not supplied by manufacturer.

Step 16

Measure, fit, and install the drain lines on the evaporator, which will be run to the closest drain source.

Step 16 Note:
Cooler evaporator drains will be run with PVC pipes. Freezer evaporators will be run with copper pipes and have a drain line heater and insulation for properly sealing. Not supplied by manufacturer.

EVAPORATOR AND CONDENSER INSTALLATION

Step 17

Finally, you will need to weld all of the connections on the evaporator and condenser.

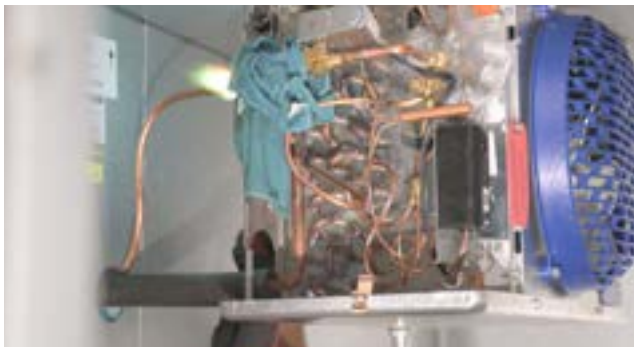

POWER THE UNIT

Now that the evaporator and condenser have been installed, it's time to complete the electrical work to bring power to the unit, which will be need to be performed by a licensed electrician.

Step 1

Notify the general contractor so that they can schedule the electrician.

Step 2

The electrician will review the unit diagram to ensure that the correct power is run to the unit, and that the proper conduit sizes are used for installation.

POWER THE UNIT

Step 3

The electrician will then wire the walk-in to bring power to the unit for the cooling components, door components, and lighting, as needed.

Step 3 Note:
When wiring is done for the door components, the wires are not initially exposed; they are hidden behind the interior light fixture above the door jamb. The electrician will need to remove the front face of the light to access the wires, then run a conduit from the breaker box to the inside of the cooler unit and attach it to the side of the light fixture. To do this, a hole will have to be made on a nearby wall panel (not a ceiling panel). Always ensure that the hole is sealed properly to avoid condensation. See Electrical Diagrams for Doors (Pages 38-41).

Step 4

A disconnect switch should also be installed for each condenser and evaporator on the unit.

UNIT START UP

Starting up the unit is the final part of the process, and an important step to ensure a successful installation.

Step 1

Check the electrical voltage and connections that were made by the electrician to ensure they are properly wired.

Step 2

Use a vacuum pump to draw all the moisture out of the system.

Step 3

Seal any open areas around where refrigeration and/or drain lines have been installed.

Step 3 Note:
Ensure any open areas, holes, and spaces are properly sealed with NSF complaint latex sealer. This includes refrigerant and/or drain line locations.

Step 4

Make sure the system can hold pressure to ensure there are no leaks in the system or welds.

Step 5

Charge the units with refrigerant.

Step 5 Note: The required refrigerant will vary based on the specification of the installation.

UNIT START UP

Step 6

Turn on the breakers, the electrical, the compressor, and the evaporator.

Step 7

Monitor the system to make sure it has enough charge and everything is getting cold. In this step, you will be letting the system run in full capacity for 15-20 minutes to make sure everything is running properly.

Step 8

Finally, if applicable, remove any remaining protective film from the unit. You may also choose to caulk the panels at this time, only if needed.

ADDITIONAL INSTALLATIONS

In this section you will learn about some of the most common optional features which may be added onto a cooler or freeze unit and the installation requirement for each.

Rain Roof

If you are installing an outdoor unit, you will need to install a rain roof. Following steps will vary on application and/or if unit is free standing or not.

Step-by-step instructions for a Free Standing Cooler installation.

Step 1

Check the size of the roof area. The roofing membrane should be approximately one foot larger in both dimensions.

Step 2

Check the rooftop and remove any foreign matter and seal all protruding rough edges such as screw heads, rivets, etc. with Duro-Last approved caulk.

Step 3

Snap a chalk line approximately 54” from roof edge. Line up the edge of the fastening tab to the chalk line.

Step 3 Note: Following step will vary on application and/or if unit is free standing or not.

Step 4

Fasten the 3” tab using a Duro-Last screw and plate. Start securement 6” from edge and continue fastening 12” on center until entire tab is secure.

Step 4 Note: Following step will vary on application and/or if unit is free standing or not.

Step 5

Unfold roofing membrane to expose the next fastening tab. Pull taught to remove slack and repeat steps #4 and #5 until all tabs are fastened.

Step 6

When roof fastening is complete, install termination bar on all perimeter edges fastened 6” on center. Leave 1/4” gap between sections of bar. Seal top edge of termination bar with Duro-Last approved caulk.

Strip Curtain

A Strip Curtain helps prevent cool air from escaping the cooler or freezer unit.

Step-by-step instructions for Strip Curtain installation.

Required Materials

- Required Materials Easimount® Vinyl Strip Curtain System
- Drill with drill bits and Phillips head bit/screwdriver
- Marking instrument

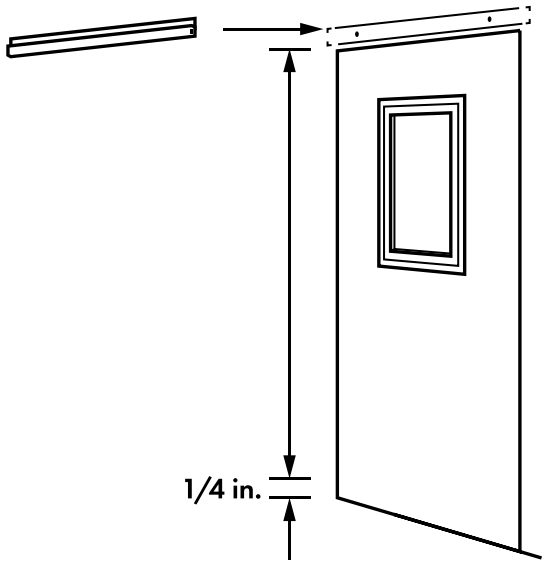

Step 1

Using the aluminum channel as a template, make sure channel is level and centered above opening. Bar height should allow strips to clear floor 1/4”. Mark hole patterns with pencil.

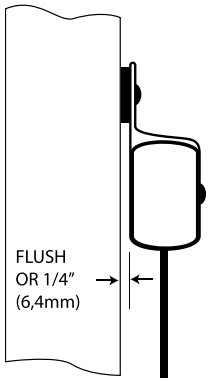

Step 2

Drill holes and mount channel with proper fasteners.

* For flush mount freezer doors, shim aluminum channel off jamb 1/4" to increase space between vinyl strips and freezer door.

Step 3

Insert one end cap at either end of channel.

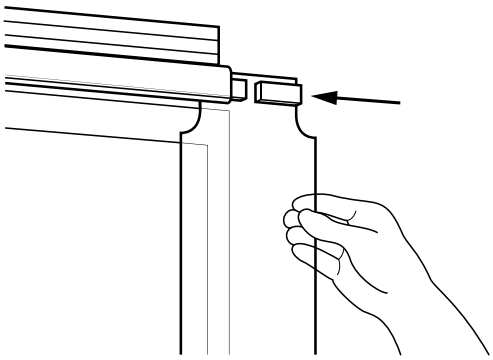

Step 4

Insert strips through un-capped end of channel.

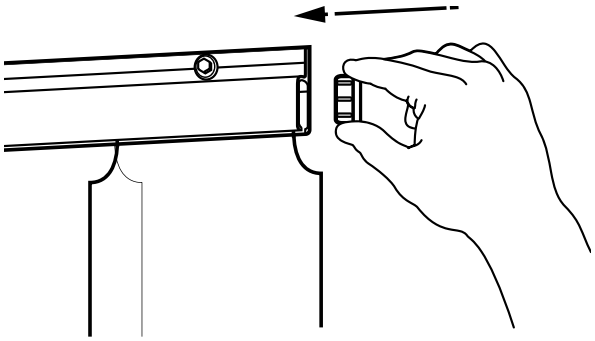

Step 5

After verifying that all strips are evenly placed and overlapping properly, insert other end cap and trim strips if needed for proper floor height.

Step 6

Optional: Insert self-tapping screws at each end of channel through last strip for added retention.

Cleaning Note:
We recommend cleaning vinyl curtains with soap and water on a regular basis. For stubborn stains use a 5% ethanol (Windex type product) and water. Wipe curtain dry. Mop up any residual water on the floor.**

Audio Visual Alarm

An Audio Visual Alarm is used to maintain food-safe temperatures in the refrigerator and/or freezer. This options should be installed by a licensed electrician.

Interior Light

Interior lights may be installed to provide additional lighting in a cooler or freezer. This options should be installed by a licensed electrician.

ADDITIONAL INSTALLATIONS

Exterior Ramp

An exterior ramp provide easy access into and out of a walk-in cooler or freeze.

The ramp can be installed quickly and easily by a certified installer in 2 easy steps:

Step 1: Place ramp on the exterior of the doorway.

Step 2: Secure the pre-installed angles on the sides of the ramp to concrete floor.

Diamond Plating Floor Overlay

Diamond plated floor planes are a common add-on to provide additional strength and protection to cooler and freezer floors. Follow the step-by-step instructions below for installation.

Note:
Always follow the layout for panel distribution before assuming any field adjustments are required. If you feel that adjustments are needed, contact Amerikooler Customer Service before making any customizations in the field.

Securing Door Sill Plate (Threshold) To Floor

Across the bottom of each door opening is a stainless steel threshold.

Install threshold and drill 3/16” diameter holes through pre-drilled holes in threshold plate.

Secure with stainless steel flat head screws provided in the hardware kit.
(See Illustration 1-3)

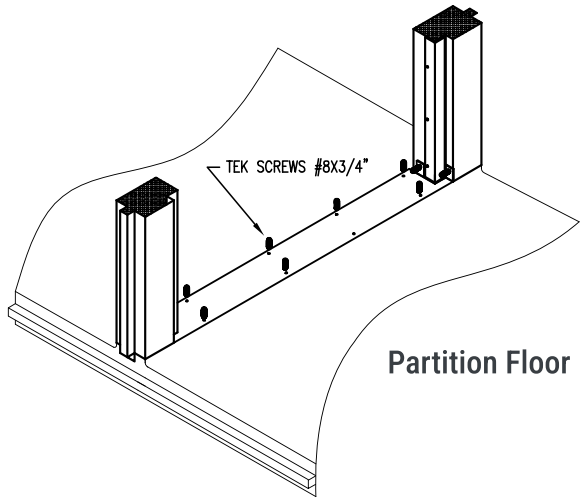

Illustration 1

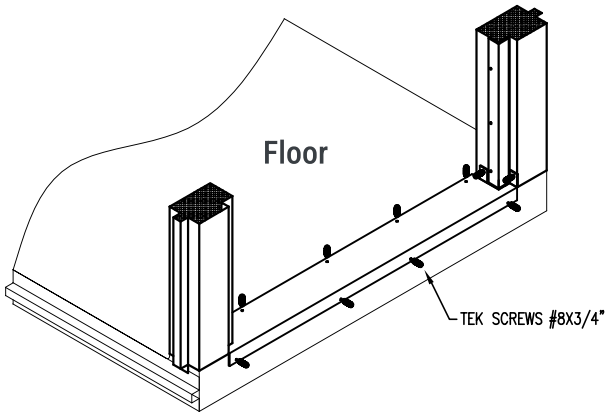

Illustration 2

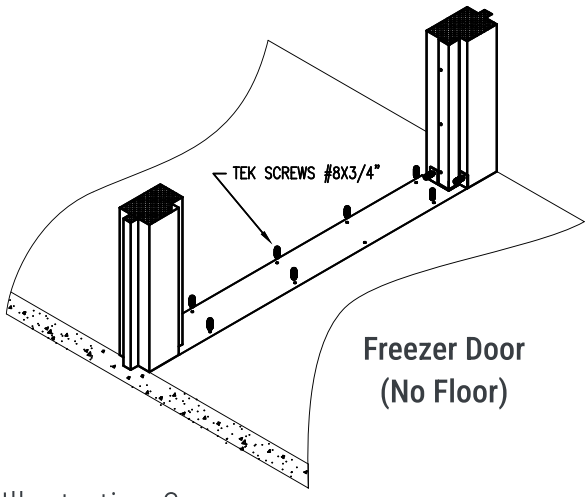

Illustration 3

Note:
Cooler with no floor will not have threshold

Installation Door Instruction Over Cement/Tile Floor

Note: Do not remove door from frame

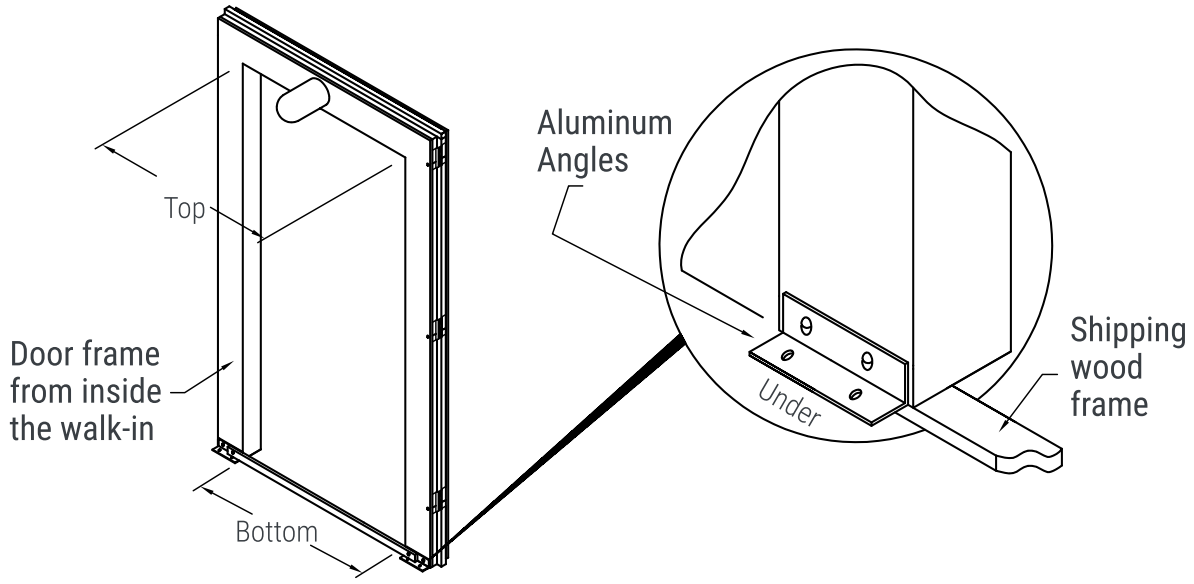

1. Remove wood frame before door frame is installed.

2. Measure the top of the door opening and measure the bottom of the door opening to make sure both measurements are equal.

3. If the measurements are different, unfasten the cam-locks of the panels and on top, left and right side of door frame. Then make necessary adjustments by pushing out the frame legs enough to ensure when you close the door, the door does not hit the frame and closes correctly. Then, secure the door frame to the adjacent wall panels on each side.

Installation Door Instruction Over Cement/Tile Floor

4 Lastly, once door frame's top and bottom measurements are equal and the door closes correctly, secure door frame's position to floor using aluminum angles.

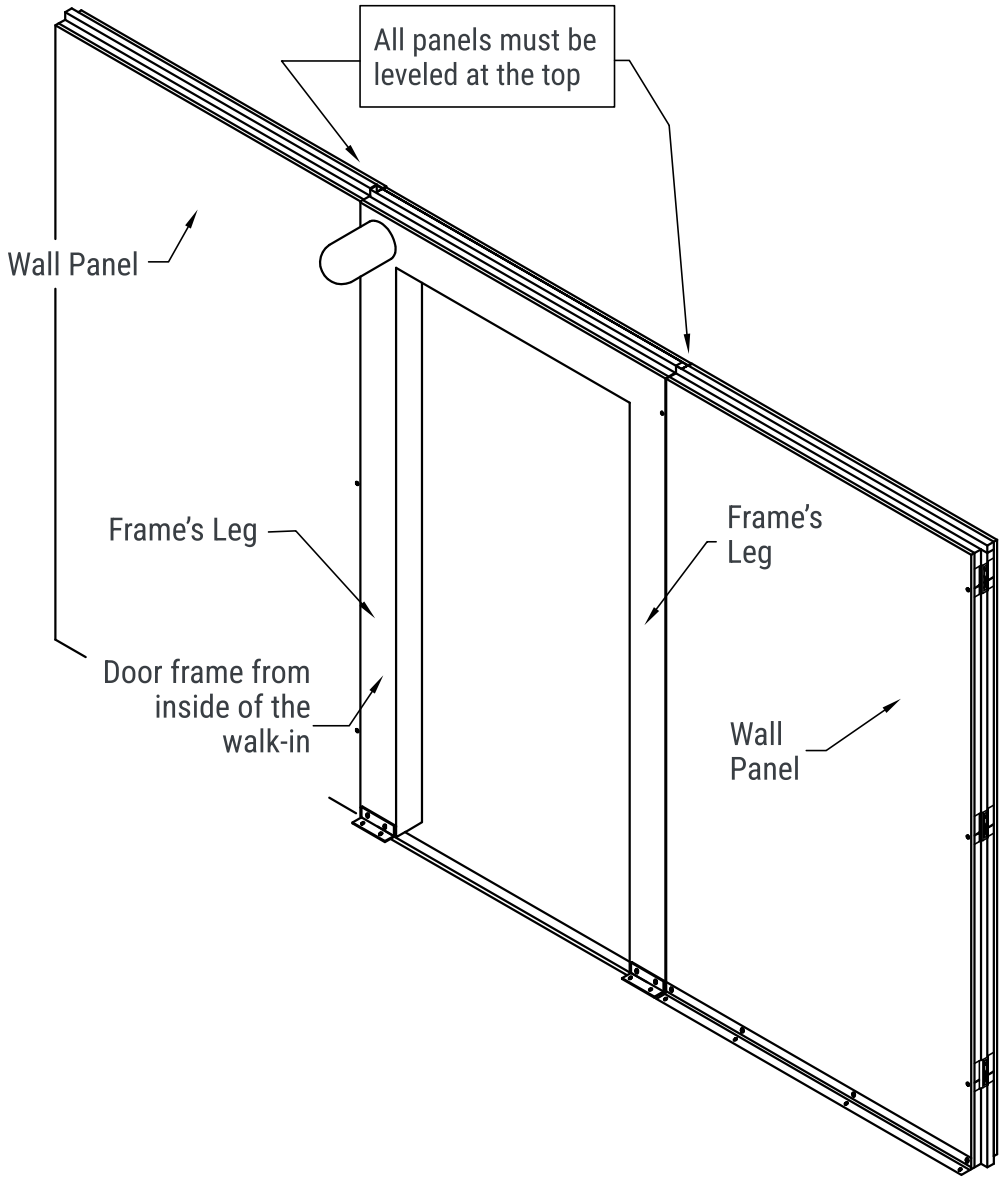

Section Construction Details

(Will vary depending on job and conditions)

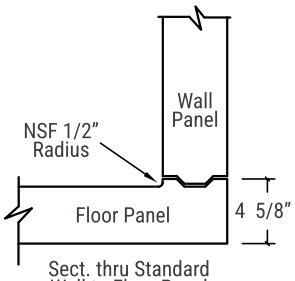

Sect. thru Standard Wall to Floor Panel

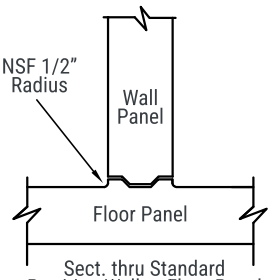

Sect. thru Standard Partition Wall to Floor Panel

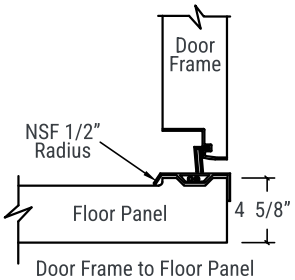

Door Frame to Floor Panel

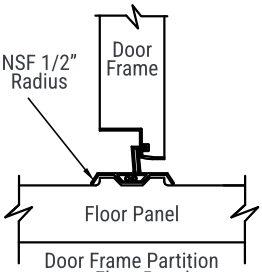

Door Frame Partition to Floor Panel

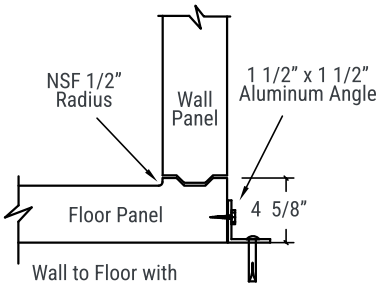

Wall to Floor with 1 1/2" x 1 1/2" Aluminum Angle for Outdoot

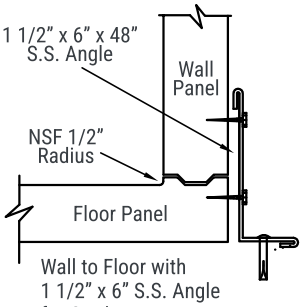

Wall to Floor with 1 1/2" x 6" S.S. Angle for Outdoor

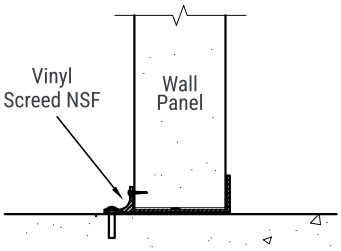

No Floor Construction Wall

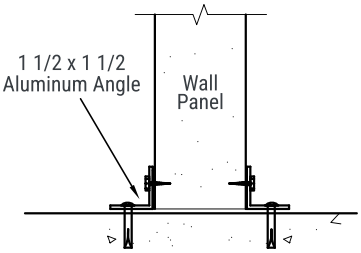

No Floor Construction Wall with 1 1/2" x 1 1/2" Aluminum Angle

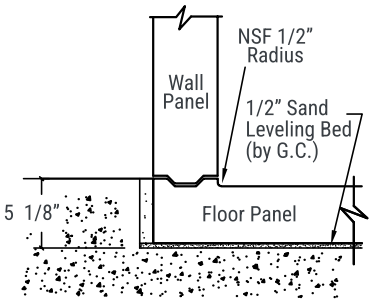

Sect. thru Depressed Floor

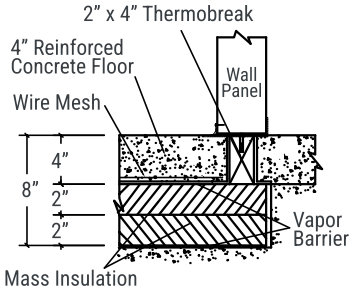

Sect. thru Wall to Floor Mass Insulated Depression

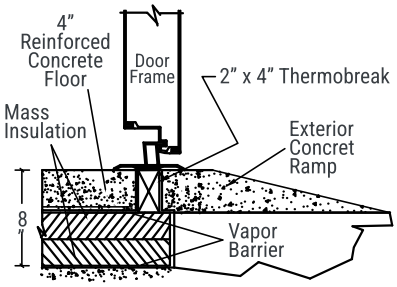

Sect. thru Door to Floor Mass Insulated Depression

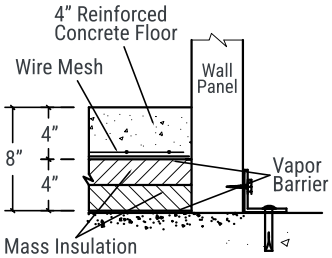

Sect. thru Wall to Floor Interior Mass Insulated

INSTALLATION BEST PRACTICES

Following the best practices outlined in this section will help to ensure a smooth and proper installation.

Best Practice 1

After the floor, start unit assembly with a corner panel away from a door to start to square up the unit.

Best Practice 2

DO NOT tighten the cam-locks all the way until the entire unit is assembled. This will help ensure that the box is squared up, and prevent issues during assembly.

Best Practice 3

Do not forget to add cam-lock plugs to cam-lock opens.

Best Practice 4

If any panels have protective film, we recommend removing the film from corners/ edges prior to assembling, and removing the rest of the film once all installation steps are completed to prevent any damage to the panels during installation.

Best Practice 5

Before making any field corrections during an installation, reach out to Amerikooler Customer Service for assistance: customerservice@amerikooler.net or (800) 627-5665

In this section we will present you some common troubleshooting scenarios and frequently asked questions and answers.

Understanding this information up front can save you time and energy during your next installation.

Troubleshooting

Scenario 1: The refrigeration unit is not reaching temperature.

Either the unit is not fully charged, a component of the unit has malfunctioned, or the installer didn't set the correct temperature.

If you're still unable to identify the issue, please email **hrpsesweb@lennoxind.com** or **call 800-537-7775 Ext. 3**, and a certified Heat Craft refrigeration expert will advise you in more detail.

Scenario 2: Panels are not lining up.

Determine if the issue is that floor panels are not lining up, the wall panels are not lining up, or the ceiling panels are not lining up.

Make sure the surface where the walk-in is being installed is level.

Make sure that during installation you didn't prematurely tighten the cam-locks on any section of panels before having all panels in place. If this is the case, please contact Amerikooler Customer Service so we can advise the proper solution for your specific build: **customerservice@amerikooler.net** or **(800) 627-5665 Ext. 669**.

Scenario 3: Cam-locks are not lining up.

First check if the directional sticker on the panel is mistakenly placed upside-down. If it is, flip the panel.

If the panels are all facing in their correct directions, please contact **customerservice@amerikooler.net**.

Scenario 4: The door is not closing properly.

Do not remove the door from the hinges. You need to adjust the hinges to eliminate the sag. To adjust the hinges please refer to the Hing regulator adjustment steps below.

Hinge regulator adjustment steps

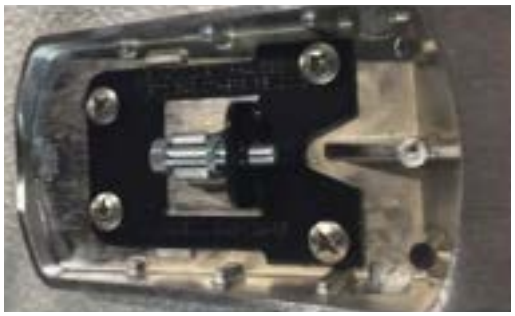

Step 1

Remove rubber cap

Step 2

Remove Phillips screws

Step 3

Adjust door

Step 4

Shims door for proper alignment

Step 5

Remove and adjust regulator

Step 6

Place regulator back on door and screw with Phillips screws

Step 7

Place rubber cap back on hinge regulator

If you continue having issues with the door closure, please contact **customerservice@amerikooler.net**.

Scenario 5: The walk-in panels are sweating.

Either the area where the walk-in is installed does not have air circulation, the A/C unit of the facility is creating humidity in the air and causing the walk-in to sweat, or panels were not properly sealed with each other and will have to add sealant.

If you're unable to identify the source of the sweating, please contact **customerservice@amerikooler.net**.

Scenario 6: The digital thermometer on the door is not working.

It may not have been calibrated properly at the time of install. If you are getting the P1 error, make sure that the probe is properly connected. Please refer to the Probe Installation Diagram on the next page.

If you are still having issues, please contact **customerservice@amerikooler.net**.

Scenario 7: The light on the inside of the unit is not working.

Either the ballast has failed, or the electrician didn't bring the proper electrical to the light.

If you are still having issues, please contact **customerservice@amerikooler.net**.

Probe Installation Diagram

WIRING DIAGRAM

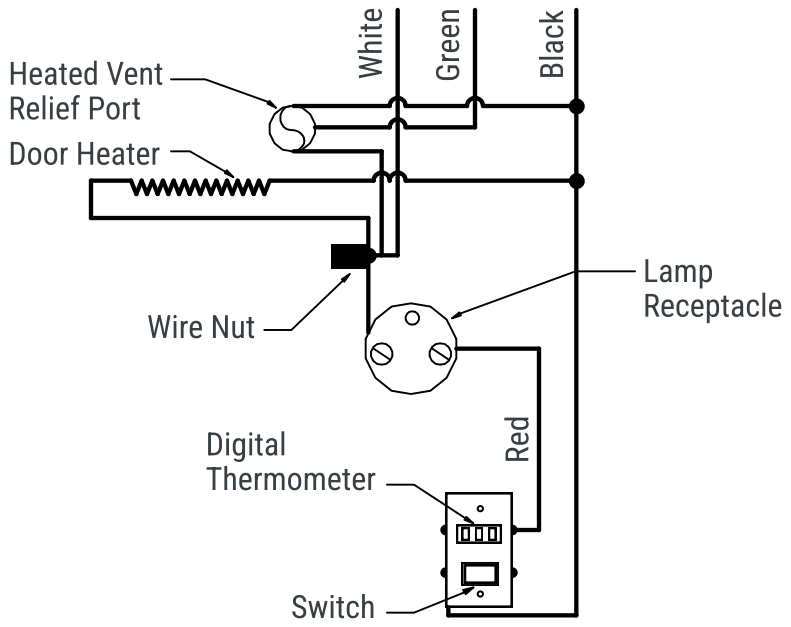

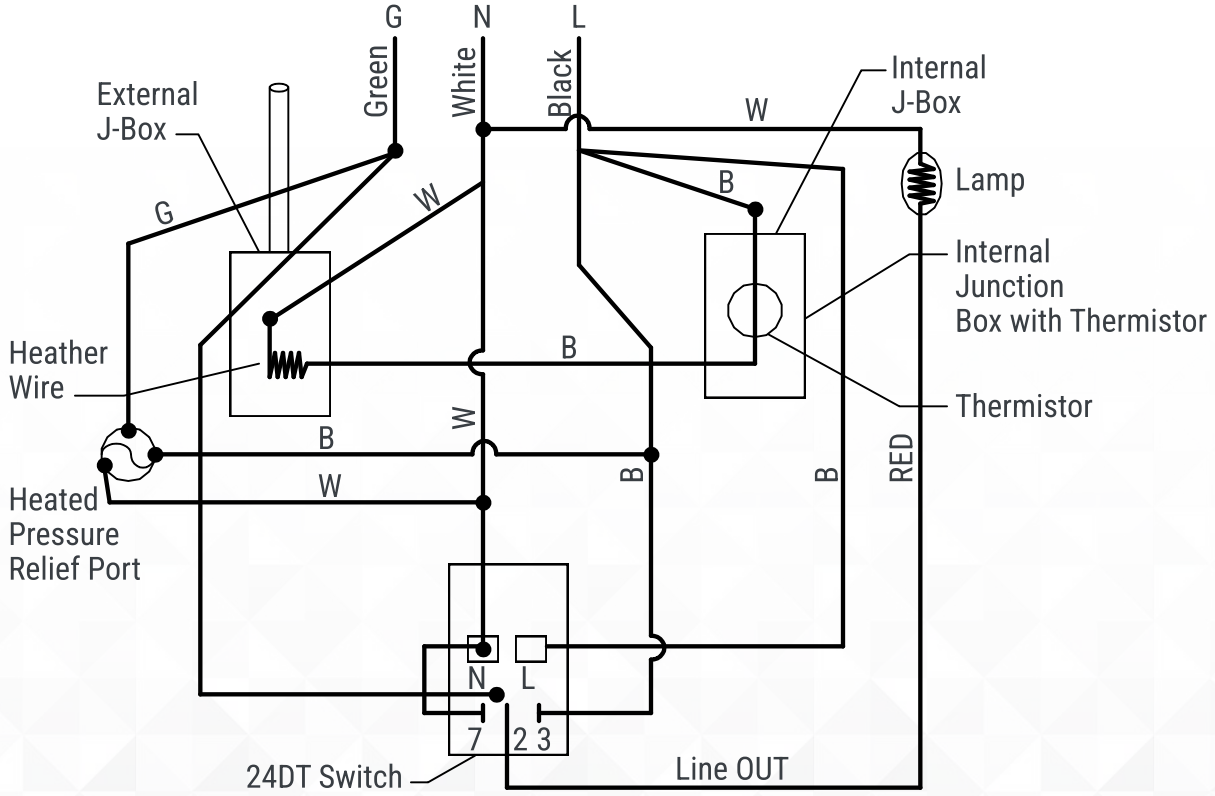

FAQs

Can I hook up the condensing unit and evaporator on the same circuit?

On cooler units, the condensing unit and evaporator will have to be on two separate circuits. The reason is that the condensing unit voltage is 208-230 and the evaporator coil is 115v. On Freezer units, the condensing unit will be connected to the circuit and you can feed the evaporator coil if you like. However, if by any chance the unit malfunctions, you will have to power down both units to examine the issue.

Can I put the compressor and lights on the same breaker?

No. The reason is that the lights should be independent from the condensing units because if by any chance a light malfunctions, and it is in the same circuit, it will turn off the unit and cause it to not work.

Can you send me the build to drawings?

Please email **customerservice@amerikooler.net** and we will provide you with the build to drawings. Please include your unit's serial number in your email, which is located inside the walk-in, on a metal plate on the frame, always on the opposite side of the hinges.

When will the unit arrive?

Please email **shipping@amerikooler.net** to confirm delivery date.

What material do you supply and which do you not?

We supply all of the basic hardware needed to install the unit. And, where applicable, we supply hardware to install diamond plate, rain roof, aluminum angle trim, etc.

We do not supply butyl caulk, sealants, etc. These should be provided by you, the installer.

How do I wire the freezer or cooler door?

Please refer to the diagram on the frames of the doors. There are wiring schematics there that identify the wiring instructions for each frame (cooler and/or freezer).

How do I bring the power into the unit to wire the freezer and cooler doors?

After reviewing the cooler/freezer door schematics on the door frame(s), run a conduit from the breaker to the walk-in wall (not the ceiling).

Note:
Running a conduit from the ceiling increases the risk of water leakage and damage to the unit.

Once you've determined the best point to run the conduit, drill a circular hole on the wall panel to bring the conduit (with power) into the walk-in's junction box which is located behind the light.

Do we have a wiring diagram for the refrigeration units?

The wiring diagram is located inside the refrigeration unit. If you are still having trouble with refrigeration unit wiring please email **hrpsesweb@lennoxind.com** or **call (800) 537-7775 Ext. 3** and a certified Heat Craft refrigeration expert will advise you in more detail.

Please refer to the wiring diagrams for the **Cooler Thermometer / On-Off Switch, LED, 120 Volt/1ϕ, Cooler Thermometer / On-Off Switch, LED, 220 Volt / 1ϕ, Freezer Thermometer / On-Off Switch, LED, 120 Volt/1 ϕ** and **Freezer Thermometer / On-Off Switch, LED, 120 Volt / 1ϕ** on the next pages.

Cooler Thermometer / On-Off Switch, LED, 120 Volt/1 ϕ

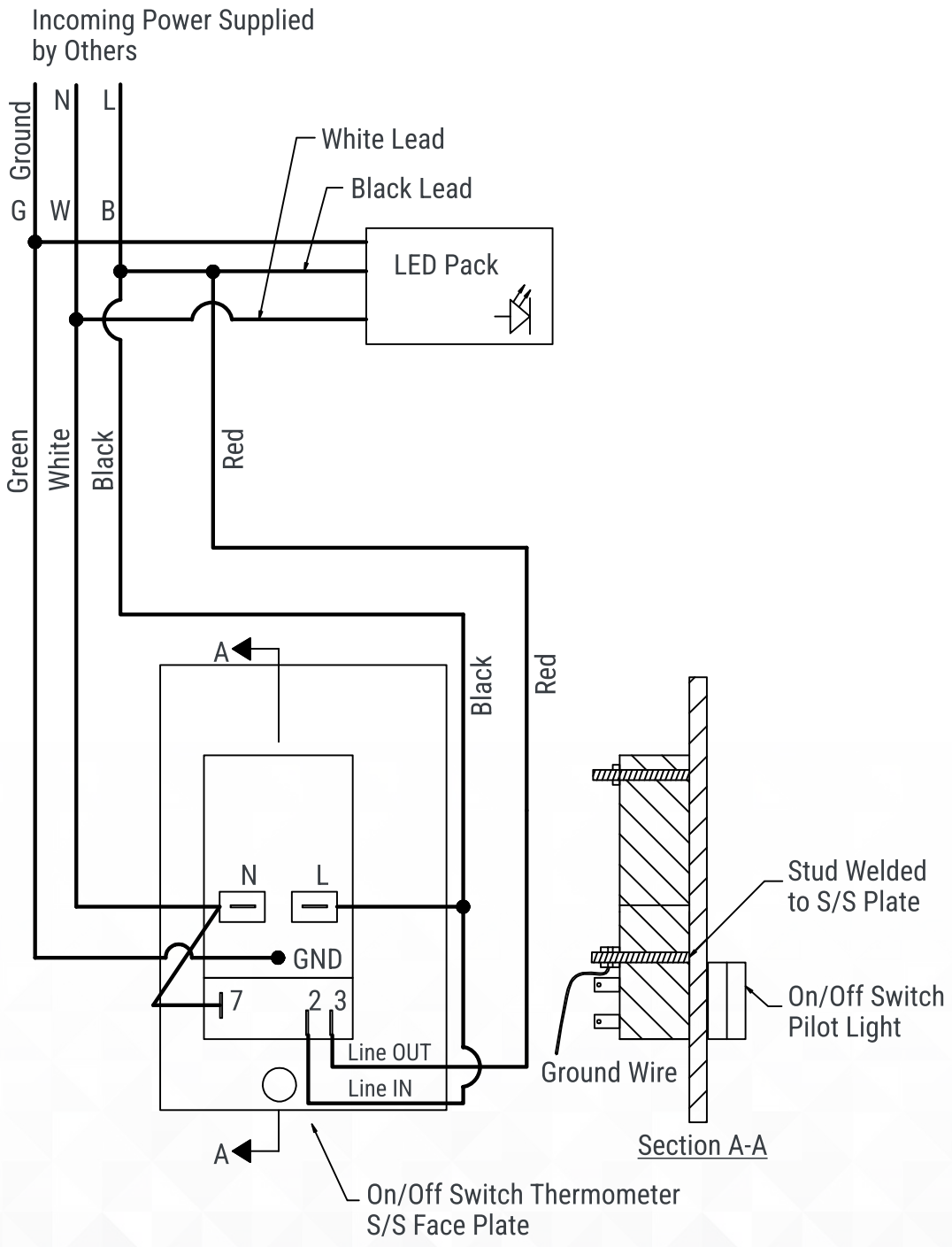

Cooler Thermometer / On-Off Switch, LED, 220 Volt/1 ϕ

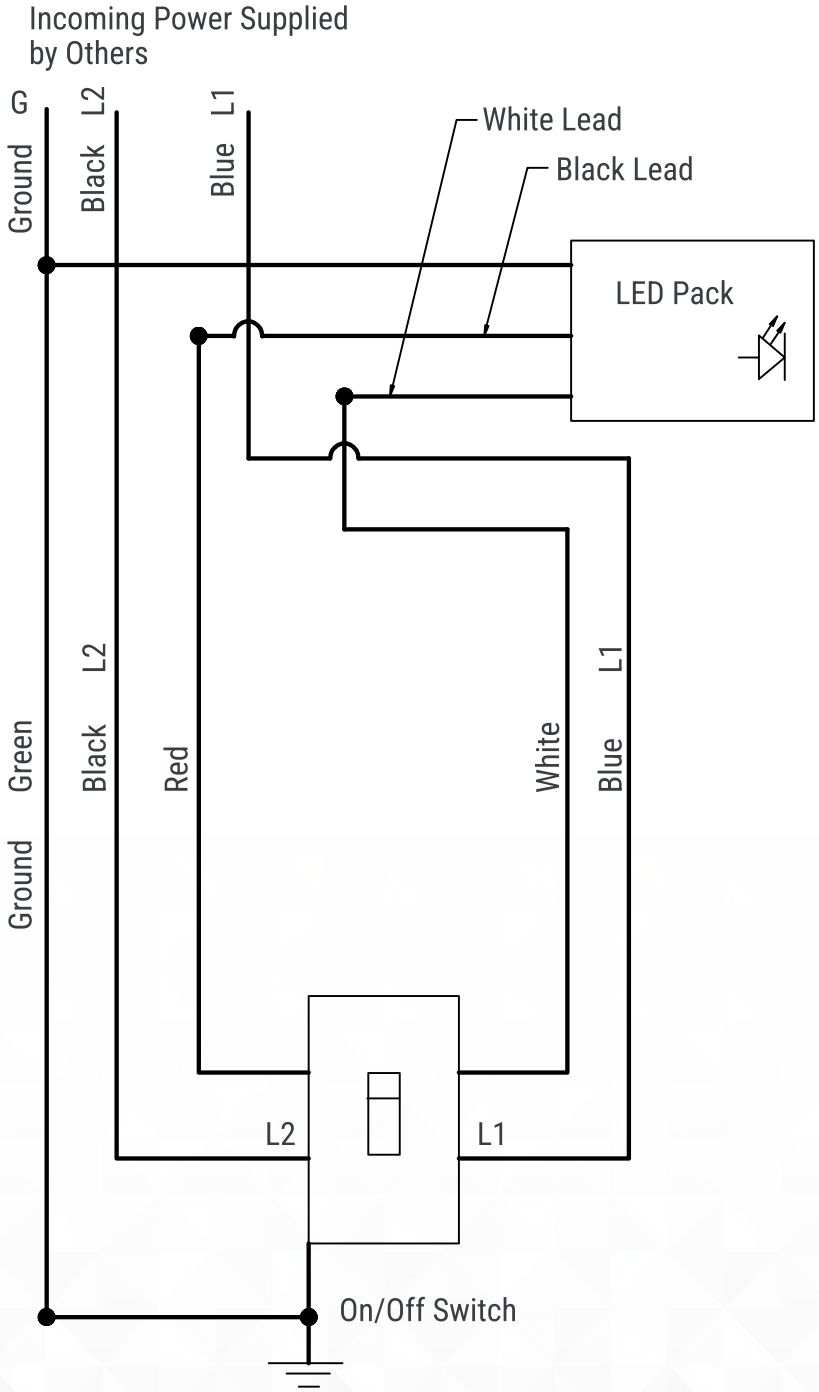

Freezer Thermometer / On-Off Switch, LED, 120 Volt/1ϕ

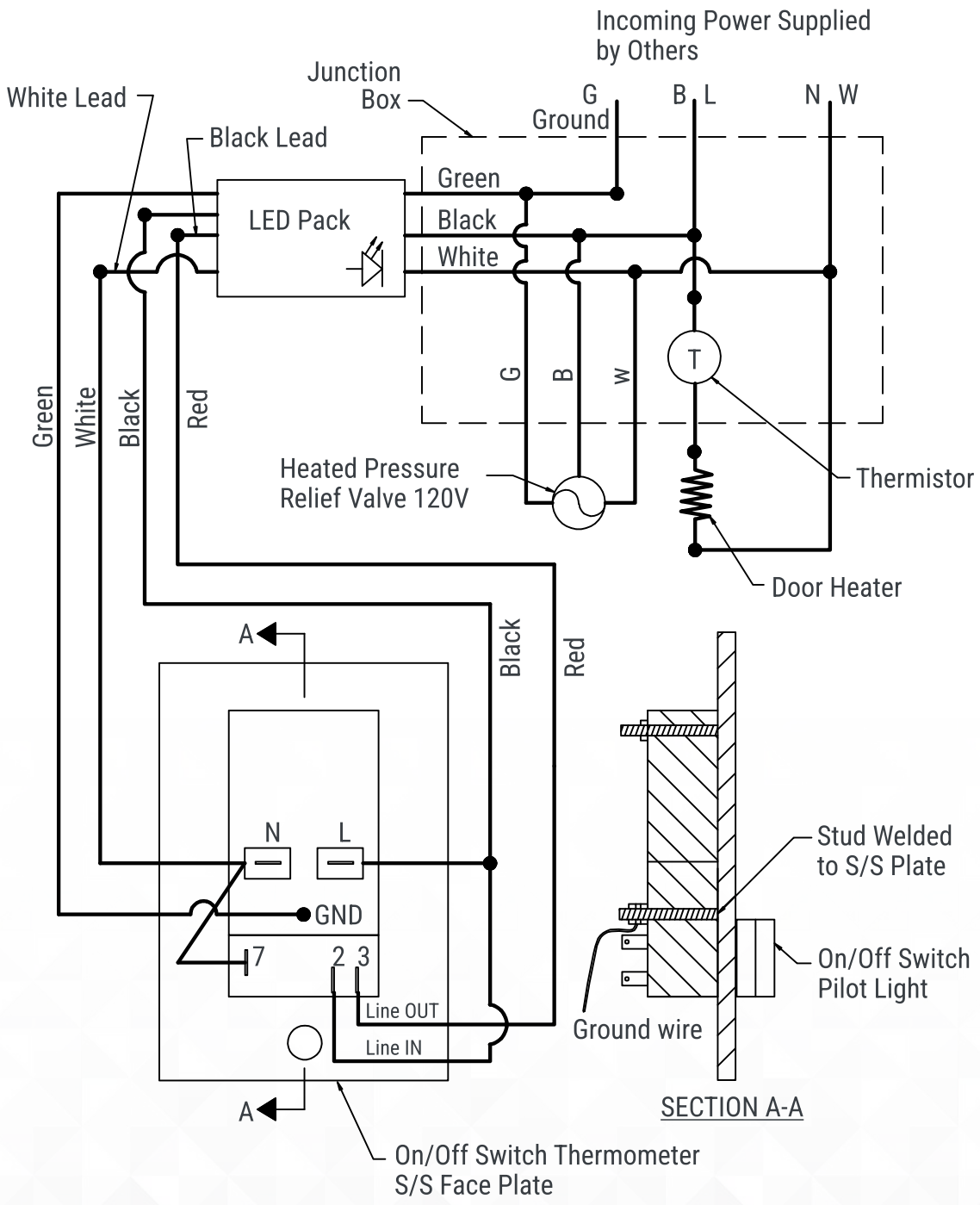
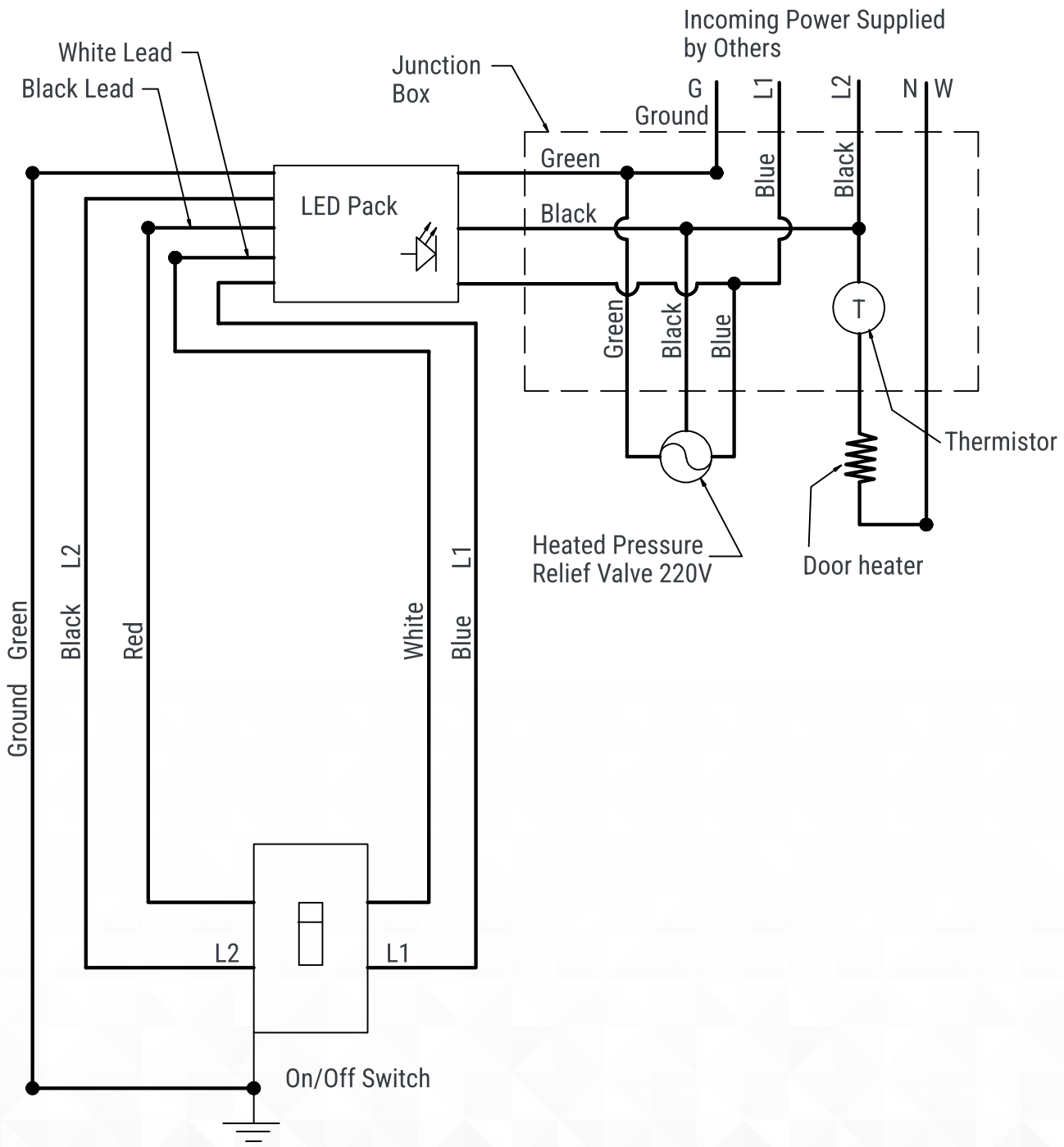
Freezer Thermometer / On-Off Switch, LED, 220 Volt/1ϕ