FRIGIDAIRE

All about the Use & Care of your Refrigerator

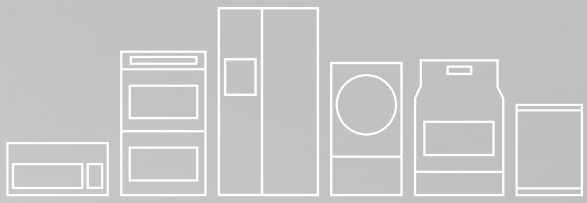

TABLE OF CONTENTS

Important Safety Information 2

Features 4

Installation 5

Door Removal 6

Door Handle Installation (some models) 9

Water Supply Connection 12

Ice Maker 14

Controls and Settings 15

Storage Features 16

Normal Operating Sounds 18

Filter replacement (optional feature--select models) 19

Care and Cleaning 20

Troubleshooting 22

Warranty 23

www.frigidaire.com USA 1-800-374-4432

www.frigidaire.ca Canada 1-800-265-8352

A13110302 (April 2019)

IMPORTANT SAFETY INFORMATION

WARNING

Please read all instructions before using this refrigerator.

For your Safety

- DO NOT store or use gasoline, or other flammable liquids in the vicinity of this or any other appliance. Read product labels for warnings regarding flammability and other hazards.
- DO NOT operate the refrigerator in the presence of explosive fumes.
- Avoid contact with any moving parts of automatic ice maker.
- Remove all staples from the carton. Staples can cause severe cuts, and also destroy finishes if they come in contact with other appliances or furniture.

Installation Checklist

Doors

- ❑ Handles are secure and tight (some models)
- ❑ Door seals completely to cabinet on all sides
- ❑ Freezer door is level from side to side across the top

Leveling

- ❑ Refrigerator is level, side-to-side and tilted ¼" (6 mm) front-to-back
- ❑ Cabinet is setting solid on all corners
- ❑ Anti-tip bracket set in front (both sides)

Electrical Power

- ❑ House power turned on
- ❑ Refrigerator plugged in

Ice Maker

- ❑ House water supply connected to refrigerator
- ❑ No water leaks present at all connections - recheck in 24 hours
- ❑ Ice maker is turned ON (some models)

Final Checks

- ❑ Shipping material removed
- ❑ Refrigerator and freezer temperatures set to recommended setting
- ❑ Crisper humidity controls set
- ❑ Registration card sent in

WARNING

WARNING! CALIFORNIA RESIDENTS
Cancer and Reproductive Harm
www.P65Warnings.ca.gov

Definitions

This is the safety alert symbol. It is used to alert you to potential personal injury hazards. Obey all safety messages that follow this symbol to avoid possible injury or death.

DANGER

DANGER indicates an imminently hazardous situation which, if not avoided, will result in death or serious injury.

WARNING

WARNING indicates a potentially hazardous situation which, if not avoided, could result in death or serious injury.

CAUTION

CAUTION indicates a potentially hazardous situation which, if not avoided, may result in minor or moderate injury.

IMPORTANT

IMPORTANT indicates installation, operation or maintenance information which is important but not hazard-related.

DANGER

DANGER Risk of fire or explosion. Flammable refrigerant used. Do not use mechanical devices to defrost refrigerator. Do not puncture refrigerant tubing.

DANGER Risk of fire or explosion. Flammable refrigerant used. To be repaired only by trained service personnel. Do not puncture refrigerant tubing.

CAUTION

CAUTION Risk of fire or explosion. Flammable refrigerant used. Consult repair manual/owner's guide before attempting to service this product. All safety precautions must be followed.

CAUTION Risk of fire or explosion. Dispose of property in accordance with federal or local regulations. Flammable refrigerant used.

CAUTION Risk of fire or explosion due to puncture of refrigerant tubing. Follow handling instructions carefully. Flammable refrigerant used.

Child Safety

Destroy or recycle the carton, plastic bags, and any exterior wrapping material immediately after the refrigerator is unpacked. Children should never use these items to play. Cartons covered with rugs, bedspreads, plastic sheets or stretch wrap may become airtight chambers, and can quickly cause suffocation.

Proper Disposal of your Refrigerator or Freezer

Risk of child entrapment

Child entrapment and suffocation are not problems of the past. Junked or abandoned refrigerators or freezers are still dangerous – even if they will sit for "just a few days". If you are getting rid of your old refrigerator or freezer, please follow the instructions below to help prevent accidents.

We strongly encourage responsible appliance recycling/disposal methods. Check with your utility company or visit www.energystar.gov/recycle for more information on recycling your old refrigerator.

Before you throw away your old refrigerator/freezer:

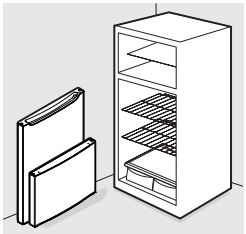

- Remove doors.
- Leave shelves in place so children may not easily climb inside.
- Have refrigerant removed by a qualified service technician.

WARNING

These guidelines must be followed to ensure that safety mechanisms in this refrigerator will operate properly.

Electrical information

- The refrigerator must be plugged into its own dedicated 115 Volt, 60 Hz., 15 Amp, AC only electrical outlet. The power cord of the appliance is equipped with a three-prong grounding plug for your protection against electrical shock hazards. It must be plugged directly into a properly grounded three prong receptacle. The receptacle must be installed in accordance with local codes and ordinances. Consult a qualified electrician. Avoid connecting refrigerator to a Ground Fault Interrupter (GFI) circuit. Do not use an extension cord or adapter plug.
- If the power cord is damaged, it should be replaced by an authorized service technician to prevent any risk.
- Never unplug the refrigerator by pulling on the power cord. Always grip the plug firmly, and pull straight out from the receptacle to prevent damaging the power cord.
- Unplug the refrigerator before cleaning and before replacing the AC LED light bulb to avoid electrical shock. Use only a 5-watt or less AC LED light bulb.
- Performance may be affected if the voltage varies by 10% or more. Operating the refrigerator with insufficient power can damage the compressor. Such damage is not covered under your warranty.
- Do not plug the unit into an electrical outlet controlled by a wall switch or pull cord to prevent the refrigerator from being turned off accidentally.

IMPORTANT

Turning the Refrigerator controls to "OFF" will disable your refrigerator's cooling system, but does not disconnect the power to the light bulb and other electrical components. To turn off power to your refrigerator you must unplug the power cord from the electrical outlet.

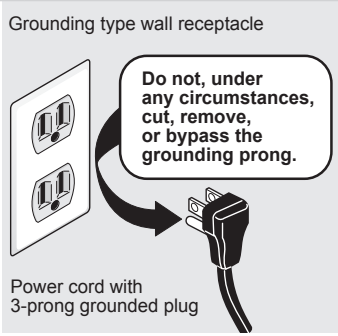

IMPORTANT

CFC/HCFC Disposal

Your old refrigerator may have a cooling system that used CFCs or HCFCs (chlorofluorocarbons or hydrochlorofluorocarbons). CFCs and HCFCs are believed to harm stratospheric ozone if released to the atmosphere. Other refrigerants may also cause harm to the environment if released to the atmosphere.

If you are throwing away your old refrigerator, make sure the refrigerant is removed for proper disposal by a qualified technician. If you intentionally release refrigerant, you may be subject to fines and imprisonment under provisions of environmental legislation.

FEATURES

Features may vary according to model

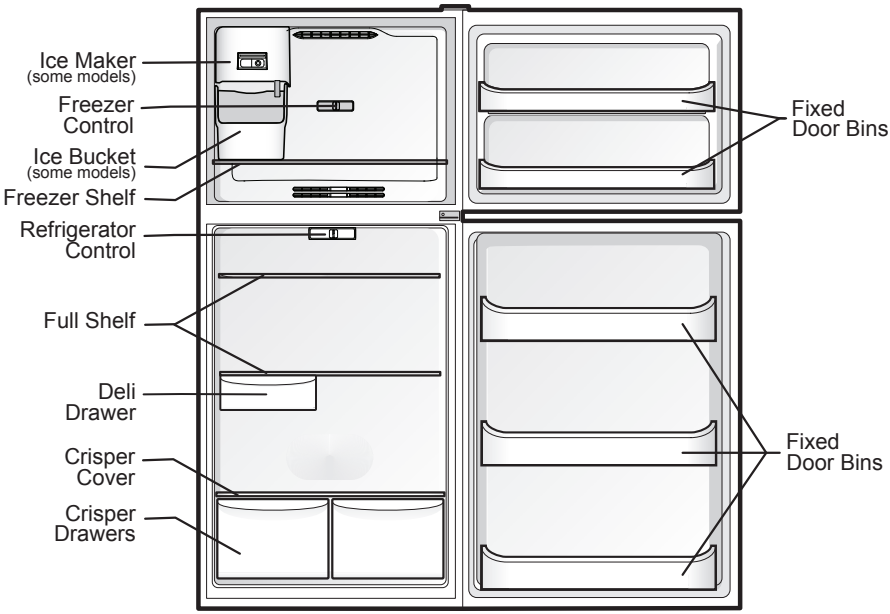

IMPORTANT

Cleaning your Refrigerator

Remove tape and glue residue from surfaces before turning the refrigerator on. Rub a small amount of liquid dish soap over the adhesive with your fingers. Rinse with warm water and dry with a soft cloth.

Do not use sharp instruments, rubbing alcohol, flammable fluids, or abrasive cleaners to remove tape or glue. These products can damage the surface of your refrigerator.

After you remove all of the package materials, clean the inside of your refrigerator before using it. See the "**CARE AND CLEANING**" section in this manual.

IMPORTANT

Moving your Refrigerator

Your refrigerator is heavy. When moving the refrigerator for cleaning or service, be sure to cover the floor with cardboard or hardboard to avoid floor damage. Always pull the refrigerator straight out when moving it. Do not wiggle or "walk" the refrigerator when trying to move it as you could damage the floor.

This Use & Care Guide provides general operating instructions for your model. Use the refrigerator only as instructed in this Use & Care Guide. Before starting the refrigerator, follow these important first steps.

Location

- Choose a place that is near a grounded electrical outlet. Do Not use an extension cord or an adapter plug.
- If possible, place the refrigerator out of direct sunlight and away from the range, dishwasher or other heat sources.
- The refrigerator must be installed on a floor that is level and strong enough to support a fully loaded refrigerator.
- Consider water supply availability for models equipped with an automatic ice maker. If you do not hook up water to the refrigerator, remember to turn the ice maker off.

CAUTION

Do not block the lower front of your refrigerator. Sufficient air circulation is essential for the proper operation of your refrigerator.

Installation

Installation clearances

- Allow the following clearances for ease of installation, proper air circulation, and plumbing and electrical connections:

Sides & Top	⅜ in.
Back	1 in.

NOTE

If your refrigerator is placed with the door hinge side against a wall, you may have to allow additional space for the handle so the door can be opened wider.

Guidelines for final positioning of your refrigerator:

- All 4 corners of the cabinet must rest firmly on the floor.
- The cabinet should be level at the front and rear.
- The sides should tilt ¼ in. (6 mm) from front to back (to ensure that doors close and seal properly).
- Doors should align with each other and be level.

Setting the Anti-tip Brackets

The anti-tip brackets are located on the lower front corners of the cabinet. Lower the anti-tip brackets on each side clockwise until they contact the floor. Do not raise the cabinet.

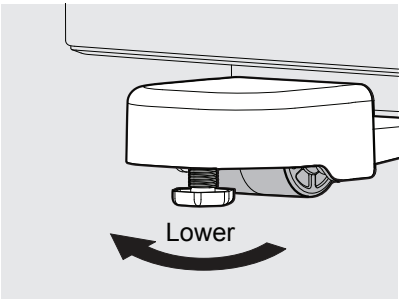

Anti-Tip Bracket

WARNING

The anti-tip bracket must be installed according to the instructions in your Use & Care Manual. Failure to do so will result in injury.

DOOR REMOVAL

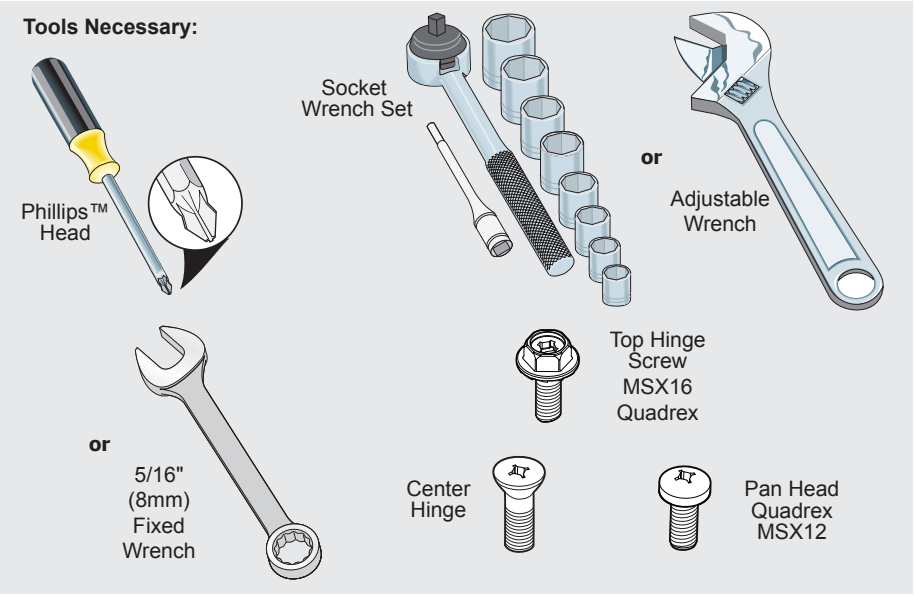

Door Removal/Reversal

CAUTION

Be sure the doors are set aside in a secure position where they cannot fall and cause personal injury.

NOTE

The direction in which your refrigerator doors open (door swing) can be reversed, from left to right or right to left, by moving the door hinges from one side to the other. Reversing the door swing should be performed by a qualified person.

IMPORTANT

Before you begin, turn the refrigerator temperature control to **OFF** and remove the electrical power cord from the wall outlet. Remove any food from door shelves.

1. Unplug your refrigerator.
2. Remove the top hinge cover (see Figure 1A).
3. Remove the 3 screws from the top hinge using a Phillips screwdriver or 5/16" wrench. Set the hinge aside (see Figure 1B).

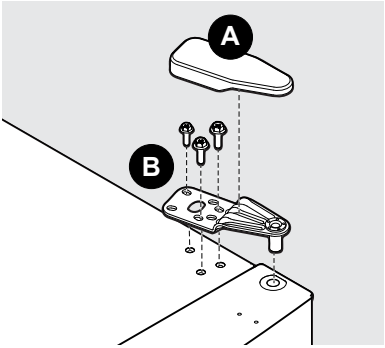

Figure 1

NOTE

Keep the screws so they can be used on the opposite side.

4. Open the freezer door and lift the door off the center hinge pin. Set the door aside.

IMPORTANT

Place the door on a padded surface to avoid damage.

5. Unscrew the center hinge pin using an adjustable wrench and set it aside (see Figure 2).
6. Open the refrigerator door and lift the door off of the bottom hinge pin. Set the door aside.

7. Remove the 3 center hinge screws using a Phillips screwdriver and set the center hinge aside (see Figure 2).

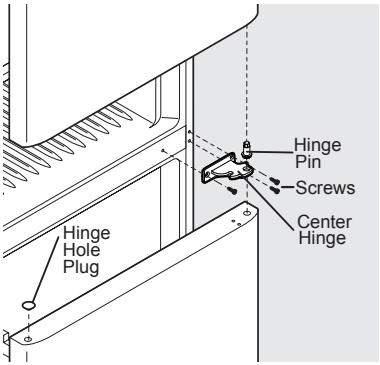

Figure 2

8. Remove the 3 pan head screws at the center of the cabinet (Figure 3) and install them on the opposite side of the cabinet.

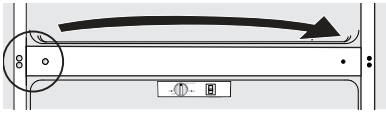

Figure 3

9. Remove both lower hinge covers.
10. Remove the screw from the door stopper with a Phillips screwdriver (see Figure 4).
11. Unscrew the bottom hinge pin from the right hand position using an adjustable wrench (see Figure 4).

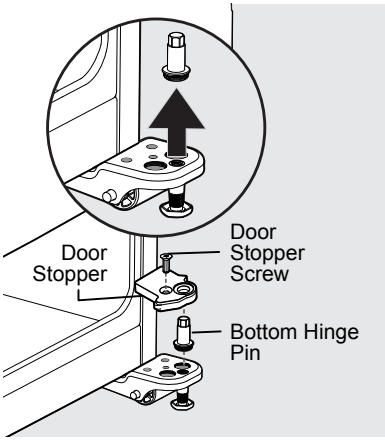

Figure 4

12. Install the bottom hinge pin in the left hand hole of the left hand lower hinge (see Figure 5).
13. Install the door stopper and screw it on top of the hinge pin (see Figure 5).

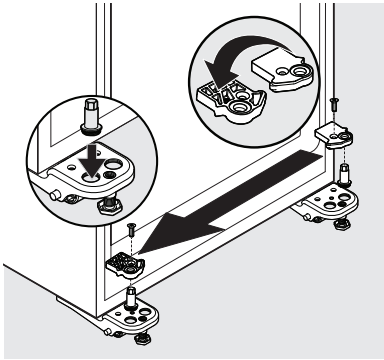

Figure 5

Door Bearing Reversal For Freezer and Refrigerator Doors

1. Pry out the center hinge bearing from the top of the refrigerator door with a straight screwdriver (see Figure 6).
2. Pry out the center hinge bearing plug from the opposite side of the refrigerator door with a straight screwdriver (see Figure 6).
3. Install the hinge bearing and plug it on opposite sides of each other.

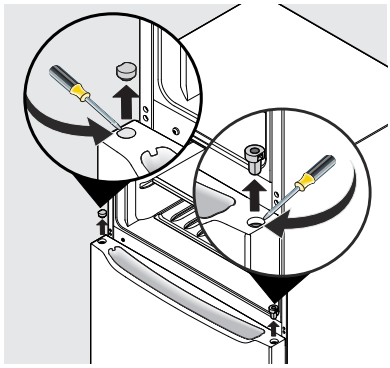

Figure 6

4. Reverse the door handle (see **DOOR HANDLE INSTALLATION** section if applicable).
5. Flip the refrigerator door over and remove the screw from the door closer using a Phillips screwdriver and set it aside (see Figure 7A).
6. Pry out the hinge bearing from the door with a straight screwdriver (see Figure 7B).
7. Install the bottom hinge bearing on the opposite side of the door (see Figure 7C).
8. Flip the door closer over and install on the opposite side of the door (see Figure 7C).

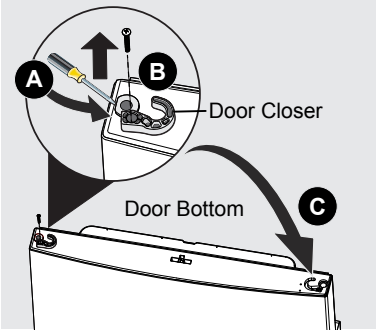

Figure 7

9. Repeat steps 1-8 for the freezer door.
10. Lower the refrigerator door over the bottom hinge pin and close the door.
11. Screw in and tighten the center hinge pin using an adjustable wrench.
12. Lower the freezer door over the center hinge pin and close door. Place the lower hinge cover between the freezer door and refrigerator door to keep it level while attaching the top hinge (see Figure 8).

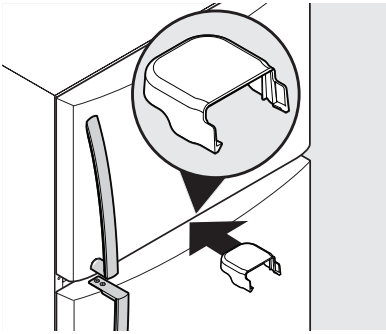

Figure 8

13. Attach the top hinge with the 3 screws using a Phillips screwdriver or 5/16” wrench.
14. Tighten the top hinge screws and check the door gasket for open seal condition (see Figure 9).
15. Replace the upper hinge cover. Replace the lower hinge covers.

DOOR HANDLE INSTALLATION (SOME MODELS)

To attach the metal refrigerator handle (Stainless steel, Black Stainless steel, Stainless Steel EZCare):

1. Place the rounded part of handle onto shoulder screw on the face of the door and align the 2 holes in top of handle with the 2 holes in top of the door. Do not tighten the set screw yet.
2. Install the 2 screws into the top of the handle.
3. Tighten the set screw on the rounded part of the handle until the handle is flush with the door; then tighten another ½ turn.

To attach the metal freezer handle (Stainless steel, Black Stainless steel, Stainless Steel EZCare):

1. Place the rounded part of handle onto shoulder screw on the face of the door and align the 2 holes in bottom of handle with the 2 holes in bottom of door. Do not tighten the set screw yet.
2. Install the 2 screws into the bottom of the handle.
3. Tighten the set screw on the rounded part of the handle until the handle is flush with the door; then tighten another ½ turn.

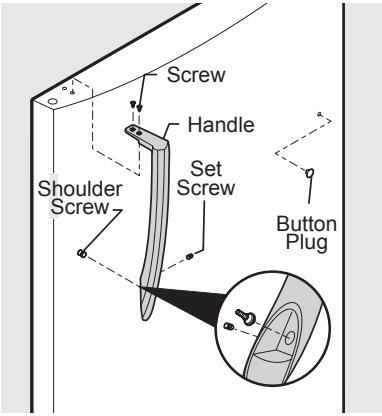

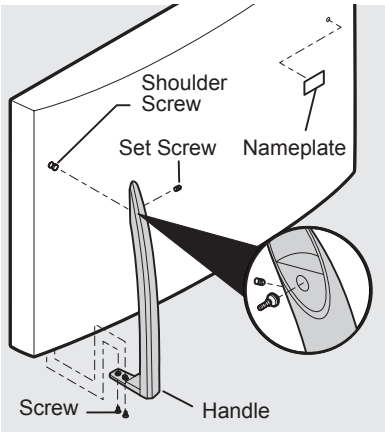

Rounded Doors

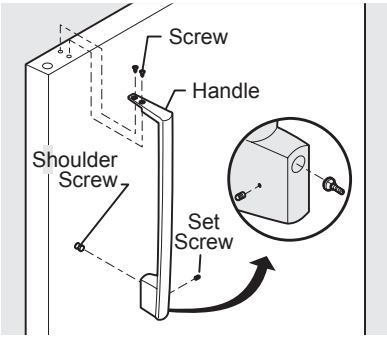

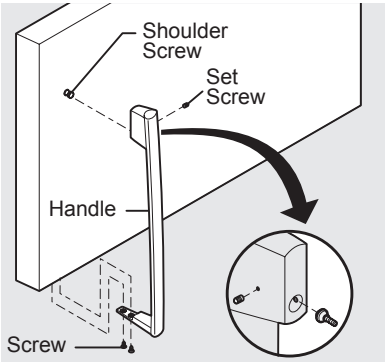

Flat Doors

DOOR HANDLE INSTALLATION (SOME MODELS)

CAUTION

Do not use an electric screwdriver to attach the handles; overtightening handles may crack them. Use a handheld screwdriver only.

To attach the plastic refrigerator handle (Smooth white/black):

1. With the door open, place the end of the handle on the dove tail mounting screw and pull it down to secure it in place.
2. Align the handle base with the holes in top of the door.
3. Install screws packaged with the handle.

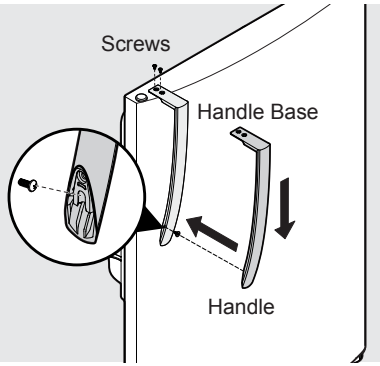

To attach the plastic freezer handle (Smooth white/black):

1. With the door open, place the end of the handle on the dove tail mounting screw and push it up to secure it in place.
2. Align the handle base with holes in the bottom of the door.
3. Install screws packaged with the handle.

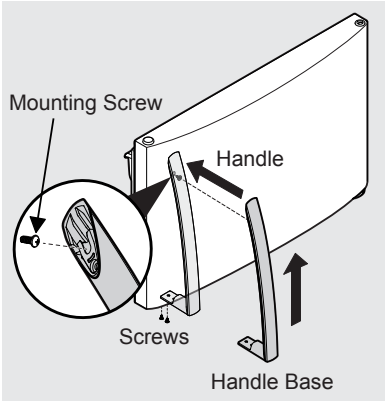

DOOR HANDLE INSTALLATION (SOME MODELS)

To reverse the door handles:

CAUTION

Be sure the doors are set aside in a secure position where they cannot fall and cause personal injury.

The handles may be easier to reverse while the doors are off.

1. Remove the name plate on the freezer door.

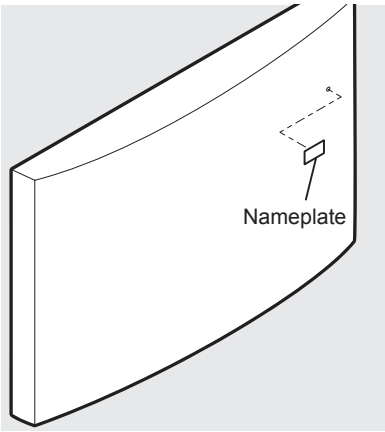

2. Remove the button plugs in the refrigerator door.

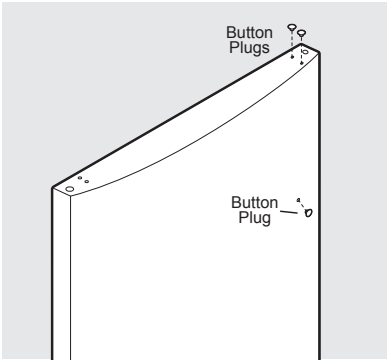

3. Reverse the freezer and refrigerator handles as shown.

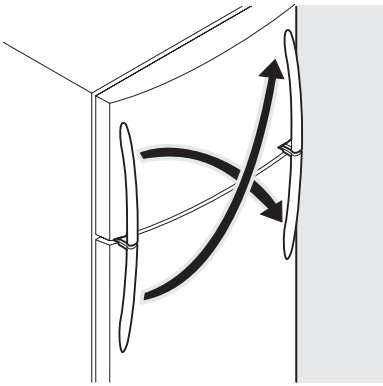

4. Install the button plugs and the name plate on the opposite side of door.

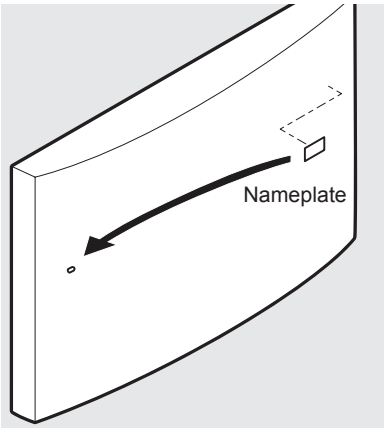

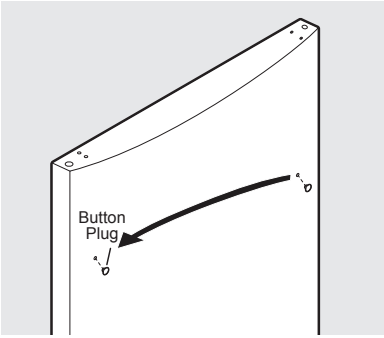

WATER SUPPLY CONNECTION

Ice Maker Models Only

NOTE

Automatic ice makers are optional accessories that may be installed in most models at any time. Visit www.frigidaire.com/Filters--Accessories/Refrigerator-Accessories for information about Ice Maker Kit 117000.

WARNING

To avoid electric shock, which can cause death or severe personal injury, disconnect the refrigerator from electrical power before connecting a water supply line to the refrigerator.

CAUTION

To Avoid Property Damage:

- Stainless Steel braided tubing is recommended for the water supply line. Water supply tubing made of ¼ in. plastic is not recommended to be used. Plastic tubing greatly increases the potential for water leaks, and the manufacturer will not be responsible for any damage if plastic tubing is used for the supply line.
- DO NOT install water supply tubing in areas where temperatures fall below freezing.
- Chemicals from a malfunctioning softener can damage the ice maker. If the ice maker is connected to soft water, ensure that the softener is maintained and working properly.

IMPORTANT

Ensure that your water supply line connections comply with all local plumbing codes.

Before Installing The Water Supply Line, You Will Need:

- Basic Tools: adjustable wrench, flat-blade screwdriver, and Phillips screwdriver
- Access to a household cold water line with water pressure between 30 and 100 psi.
- A water supply line made of stainless steel tubing. To determine the length of tubing needed, measure the distance from the ice maker inlet valve at the back of the refrigerator to your cold water pipe, so the refrigerator can be moved out for cleaning.
- A shutoff valve to connect the water supply line to your household water system. DO NOT use a self-piercing type shutoff valve.
- Do not reuse compression fitting or use thread seal tape.

NOTE

Check with your local building authority for recommendations on water lines and associated materials prior to installing your new refrigerator. Depending on your local/state building codes, Frigidaire recommends for homes with existing valves its **Smart Choice®** water line kit 5304437642 (with a 6 ft. Stainless Steel Water Line) and for homes without an existing valve, Frigidaire recommends its **Smart Choice®** water line kit 5304493869 (with a 6′ Polyline Waterline). Please refer to www.frigidaire.com/Filters--Accessories/Refrigerator-Accessories for more information.

To Connect Water Supply Line To the Ice Maker Inlet Valve

1. Disconnect refrigerator from electric power source.
2. Place end of water supply line into sink or bucket. Turn ON water supply and flush supply line until water is clear. Turn OFF water supply at shutoff valve.
3. Remove plastic cap from water valve inlet and discard cap.
4. **If you use copper tubing**, slide brass compression nut, and then ferrule (sleeve) onto water supply line. Push water supply line into water valve inlet as far as it will go (¼ in. / 6.4 mm). Slide ferrule (sleeve) into valve inlet and finger tighten compression nut onto valve. Tighten another ½ turn with a wrench; DO NOT overtighten. See below.

   If you use braided flexible stainless steel tubing, the nut is already assembled on the tubing. Slide nut onto valve inlet and finger tighten nut onto valve. Tighten another ½ turn with a wrench; DO NOT overtighten. See below.

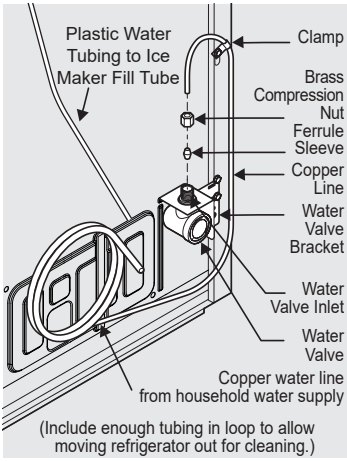

Units with copper tubing

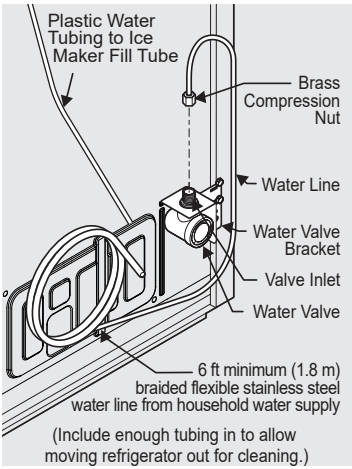

Units with braided flexible stainless steel tubing

5. With steel clamp and screw, secure water supply line (copper tubing only) to rear panel of refrigerator as shown.
6. Coil excess water supply line (copper tubing only), about 2½ turns, behind refrigerator as shown and arrange coils so they do not vibrate or wear against any other surface.
7. To turn ice maker on, press the ice maker's On/Off power switch so the LED is steadily illuminated.

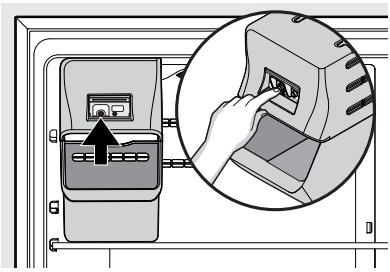

8. Turn ON water supply at shutoff valve and tighten any connections that leak.
9. Reconnect refrigerator to electrical power source.

ICE MAKER

NOTE

Automatic ice makers are optional accessories that may be installed in most models at any time. Visit www.frigidaire.com/Filters--Accessories/Refrigerator-Accessories for information about Ice Maker Kit 117000.

If your refrigerator has an automatic ice maker, it will produce minimal ice during the first 24 hours of operation. Air in new plumbing lines may cause the ice maker to cycle 2 or 3 times before making a full tray of ice. With no usage, it will take approximately 1 to 2 days to fill the ice container.

New plumbing connections may cause the first production of ice cubes to be discolored or have an odd flavor. Discard ice made during the first 24 hours.

IMPORTANT

The ice maker is shipped in the **On** position. To ensure proper function for your ice maker, hook up the water supply immediately or turn the ice maker **OFF**. If the ice maker is on and the water supply is not connected, the water valve will make a loud chattering noise.

Turning your Ice Maker On

After completely connecting the plumbing, you must open the water supply valve. Place the ice container under the ice maker, pushing it as far back as possible. Press the ice maker's On/Off button.

Turning your Ice Maker Off

To stop the ice maker, press the ice maker's On/Off button. The ice maker regulates the ice production and stops making ice when full and starts again when ice is low in the ice container.

ICE PRODUCTION: WHAT TO EXPECT

The ice maker will produce 2 to 2.5 pounds of ice every 24 hours depending on usage conditions. Ice is produced at a rate of 10 cubes every 100 to 160 minutes.

CAUTION

Do Not place the ice container in your dishwasher.

Cool Down Period

To ensure safe food storage, allow the refrigerator to operate with the doors closed for at least 8 hours before loading it with food.

Refrigerator & Freezer Controls

NOTE

When first turning the refrigerator on, adjust the control to **Recommended**. After 24 hours, adjust the controls as needed.

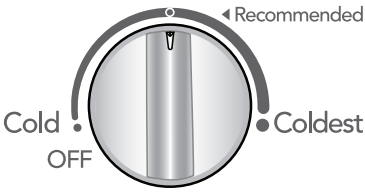

Refrigerator Control

IMPORTANT

Adjusting the refrigerator temperature control to **OFF** turns off the compressor and prevents the refrigerator from cooling, but does not disconnect the power to the light bulb and other electrical components. To turn off power to your refrigerator, you must unplug the power cord from the wall outlet.

NOTE

If your unit is in a garage or area where the temperature is below 50° F, adjust the freezer control to the coldest setting to improve performance.

Temperature Adjustment

Adjust the temperature gradually: adjust the knob in small increments, allowing the temperature to stabilize.

- For colder temperatures, adjust the knob towards **Coldest**.
- For warmer temperatures, adjust the knob towards **Cold**.

Adjusting the refrigerator control will change temperatures in both compartments. The freezer control can be left at the factory preset (*__Recommended__) or adjusted as desired.

To maintain temperatures, a fan circulates air in the refrigerator and freezer compartments. For good circulation, do not block cold air vents with food items.

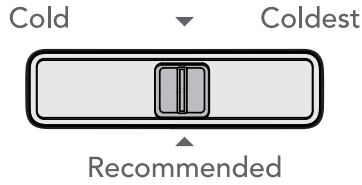

Freezer Control

STORAGE FEATURES

Door Storage

Door bins, shelves, and racks are provided for convenient storage of jars, bottles, and cans. Frequently used items can be quickly selected.

The dairy compartment, which is warmer than the general food storage section, is intended for short term storage of cheese, spreads, or butter.

Door Bin

Door bins can accommodate gallon-sized plastic drink containers and economy-sized jars and containers.

To remove the door bin:

1. Lift up on the bin
2. Pull it straight out.

To install the door bin:

1. Push the bin back and down into the locking tabs.
2. The bin sides will lock into the tabs.

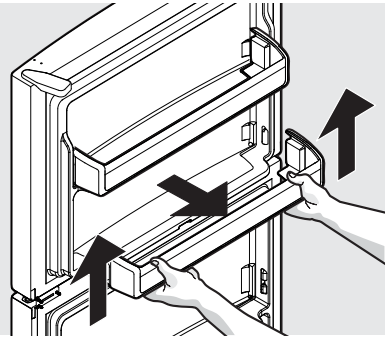

Door Bin

Shelf Adjustment

The shelves are easy to adjust to suit individual needs. Before adjusting the shelves, remove all food.

To adjust shelves, lift the back of the shelf and pull forward.

To replace shelves, insert the rear of the shelf into any pair of shelf rails and carefully push the shelf back into position.

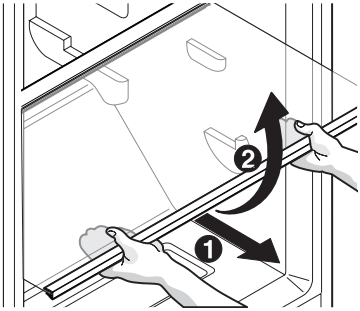

Glass Shelf

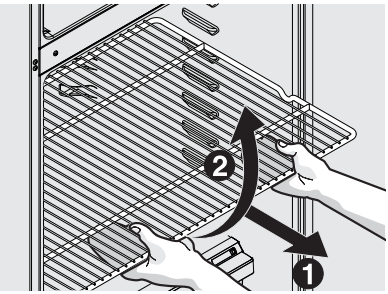

Wire Shelf

CAUTION

Do not clean glass shelves or covers with warm water when they are cold. Shelves and covers may break if exposed to sudden temperature changes or impact, such as bumping. Tempered glass is designed to shatter into many small, pebble-size pieces. This is normal. Glass shelves and covers are heavy. Use both hands when removing them to avoid dropping.

CAUTION

To avoid personal injury or property damage, handle tempered glass shelves carefully. Shelves may break suddenly if nicked, scratched, or exposed to sudden temperature change.

Crisper Humidity Control (some models)

The crisper humidity control, present on the crisper drawers of some models, allows you to adjust the humidity within the crisper. This can extend the life of fresh vegetables that keep best in high humidity.

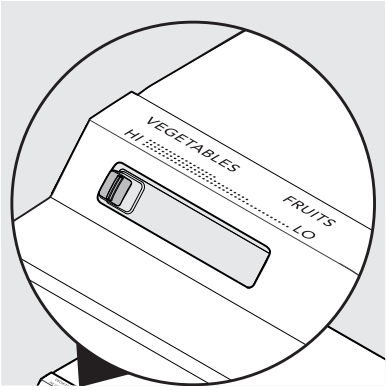

NOTE

Leafy vegetables keep best when stored with the Humidity Control set on High Humidity, or in a drawer without a Humidity Control. This keeps incoming air to a minimum and maintains maximum moisture content. Store non-leafy vegetables and fruits still in their skins at the low humidity setting.

Half Width Deli Drawer (some models)

Some models are equipped with a sliding Deli Drawer for storage of luncheon meats, spreads, cheeses, and other deli items. Please be sure to support the glass when removing the drawer.

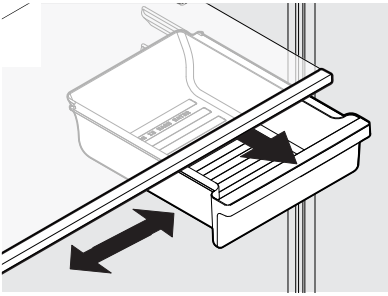

NORMAL OPERATING SOUNDS

Understanding the sounds you may hear

Your new, high-efficiency refrigerator may introduce unfamiliar sounds. These sounds normally indicate your refrigerator is operating correctly. Some surfaces on floors, walls, and kitchen cabinets may make these sounds more noticeable.

NOTE

Rigid foam insulation is very energy efficient but is not a sound insulator.

Following is a list of major components in your refrigerator and the sounds they can cause:

A **Evaporator** Refrigerant through the evaporator may create a boiling or gurgling sound.

B **Evaporator fan** You may hear air being forced through the refrigerator by the evaporator fan.

C **Defrost heater** During defrost cycles, water dripping onto the defrost heater may cause a hissing or sizzling sound. After defrosting, a popping sound may occur.

IMPORTANT

During the automatic defrost cycle, you may notice a red glow in the vents on the back wall of your freezer compartment. This is normal during the defrost cycle.

D **Automatic ice maker** When ice has been produced, you will hear ice cubes falling into the ice bin.

F **Condenser fan** You may hear air being forced through the condenser.

G **Compressor** Modern, high-efficiency compressors run much faster than in the past. The compressor may have a high-pitched hum or pulsating sound.

H **Water valve** If your refrigerator is equipped with an automatic ice maker, you will hear a buzzing sound as the water valve opens to fill the ice maker during each cycle.

I **Drain pan** (not removable) You may hear water dripping into the drain pan during the defrost cycle.

J **Condenser** The condenser may create minimal sounds from forced air.

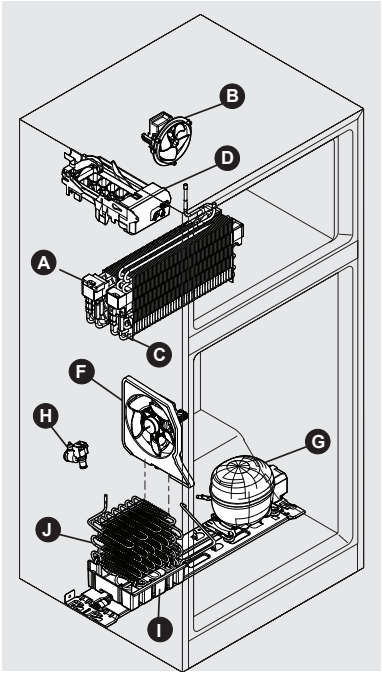

PureAir Ultra II™ Air Filter

Keep your refrigerator fresh with our PureAir Ultra II™ air filter's active carbon technology that absorbs and captures undesirable odors more effectively than baking soda. To ensure optimal filtering of refrigerator odors, change the filter every 6 months.

The air filter is located in the top center of the fresh food compartment.

For models with the filter housing already installed, you may purchase a PureAir Ultra II™ replacement filter (PAULTRA2) at www.frigidaire.com/Filters--Accessories/Refrigerator-Accessories.

For models that are air filter ready, you will need to purchase a starter kit (BRPAULTRA2KIT) at www.frigidaire.com/Filters--Accessories/Refrigerator-Accessories. The kit includes:

- 1 Filter Housing
- 1 Air filter (PAULTRA2)

NOTE

For the best results use genuine Frigidaire replacement filters only.

Replacing the PureAir Ultra II™ Air Filter

1 Unpack the new filter and snap it into the filter housing*. The open face (black carbon media) of the filter should be installed facing outward in the cover.

2 Place the air filter housing in the refrigerator by snapping it into the back section of the control housing as shown.

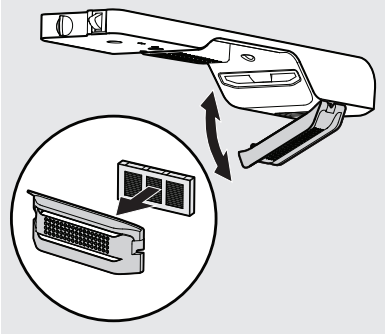

***Some features of the filter housing may vary.**

Protecting your investment

Keeping your refrigerator clean maintains appearance and prevents odor build-up. Wipe up any spills immediately and clean the freezer and refrigerator compartments at least twice a year. When cleaning, take the following precautions:

- Never use CHLORIDE or cleaners with bleach to clean stainless steel.
- Do not wash any removable parts in a dishwasher.
- Always unplug the electrical power cord from the wall outlet before cleaning.
- Remove adhesive labels by hand. Do not use razor blades or other sharp instruments which can scratch the appliance surface.
- Do not remove the serial plate.

Do not use abrasive cleaners such as window sprays, scouring cleansers, brushes, flammable fluids, cleaning waxes, concentrated detergents, bleaches or cleansers containing petroleum products on plastic parts, interior doors, gaskets or cabinet liners. Do not use paper towels, metallic scouring pads, or other abrasive cleaning materials or strong alkaline solutions.

NOTE

If you set your temperature controls to turn off cooling, power to lights and other electrical components will continue until you unplug the power cord from the wall outlet.

CAUTION

Pull the refrigerator straight out to move it. Shifting it from side to side may damage flooring. Be careful not to move the refrigerator beyond the plumbing connections.

IMPORTANT

If you store or move your refrigerator in freezing temperatures, be sure to completely drain the water supply system. Failure to do so could result in water leaks when the refrigerator is put back into service. Contact a service representative to perform this operation.

Care and Cleaning Tips		
Part	**What To Use**	**Tips and Precautions**
Interior & Door Liners	• Soap and water • Baking soda and water	Use 2 tbsp of baking soda in 1 qt of warm water. Be sure to wring excess water out of sponge or cloth before cleaning around controls, light bulb or any electrical part.
Door Gaskets	• Soap and water	Wipe gaskets with a clean soft cloth.
Drawers & Bins	• Soap and water	Use a soft cloth to clean drawer runners and tracks.
Glass Shelves	• Soap and water • Glass cleaner • Mild liquid sprays	Allow glass to warm to room temperature before immersing in warm water.
Exterior & Handles	• Soap and water • Non Abrasive Glass Cleaner	Do not use commercial household cleaners containing ammonia, bleach or alcohol to clean handles. Use a soft cloth to clean smooth handles. DO NOT use a dry cloth to clean smooth doors.
Exterior & Handles (Stainless Steel Models Only)	• Soap and water • Stainless Steel Cleaners	Never use CHLORIDE or cleaners with bleach to clean stainless steel. Clean stainless steel front and handles with non-abrasive soapy water and a dishcloth. Rinse with clean water and a soft cloth. Use a non-abrasive stainless steel cleaner. These cleaners can be purchased at most home improvement or major department stores. Always follow manufacturer's instructions. Do not use household cleaners containing ammonia or bleach. **NOTE:** Always clean, wipe and dry with the grain to prevent scratching. Wash the rest of the cabinet with warm water and mild liquid detergent. Rinse well, and wipe dry with a clean soft cloth.
Air Filter	• Order Air Filter Housing Kit BRPAULTRA-2KIT, which includes a PureAir Ultra II™ air filter at www.frigidaire.com	Our PureAir Ultra II™ air filter's active carbon technology absorbs and captures undesirable odors more effectively than baking soda.
Replacing Light Bulbs	• Unplug appliance • Wear gloves • Remove light cover • Replace old bulb • Replace light cover • Plug in the appliance	**CAUTION**: Wear gloves when replacing the AC LED light bulbs to avoid getting cut. Use same wattage when replacing bulb. **CAUTION:** Use only a 5-watt or less AC LED light bulb.

TROUBLESHOOTING

1-800-374-4432 (United States)
1-800-265-8352 (Canada)

Visit our web site at www.frigidaire.com.

Common Occurrences	Before calling for service, review this list. It may save you time and expense. This list includes common occurrences that are not the result of defective workmanship or materials in this appliance.
Refrigerator does not run.	• Ensure the plug is tightly pushed into an electrical outlet. • Check/replace the fuse with a 15-amp time-delay fuse. Reset the circuit breaker. • The refrigerator control is turned to **OFF**. • Refrigerator may be in defrost cycle. Wait 20 minutes and check again.
Freezer temperature is colder than preferred. Refrigerator temperature is satisfactory.	• Set the auxiliary freezer control to a warmer setting until the freezer temperature is satisfactory. Allow 24 hours for the temperature to stabilize.
Refrigerator temperature is too cold. Freezer temperature is satisfactory.	• Set the refrigerator control to a warmer setting. Allow 24 hours for the temperature to stabilize. Then check the freezer temperature and adjust as needed.
Freezer temperature is warmer than preferred. Refrigerator temperature is satisfactory.	• Set the auxiliary freezer control to a colder setting until the freezer temperature is satisfactory. Allow 24 hours for the temperature to stabilize.
Refrigerator temperature is too warm. Freezer temperature is satisfactory.	• Set the refrigerator control to a colder setting. Allow 24 hours for temperature to stabilize. Then check refrigerator temperature and adjust as needed.
Refrigerator is noisy or vibrates.	• The cabinet is not level. • Floor is weak. • See the **"NORMAL OPERATING SOUNDS"** section.
Odors in the refrigerator.	• The interior needs to be cleaned. • Foods that produce odors should be covered or wrapped.
Cabinet light is not working.	• Replace with only a 5-watt or less AC LED light bulb. • Ensure the plug is tightly pushed into an electrical outlet. • The light switch may be stuck. Push in the light switch, located on the refrigerator side wall, to release.
Automatic ice maker is not working (some models)	• Ensure the ice maker is on (green light). • The ice maker should produce 2 to 2.5 pounds of ice in a 24 hour period. • Ensure the water supply is turned on. • The water pressure may be too low. • The freezer may not be cold enough.

Your appliance is covered by a one year limited warranty. For one year from your original date of purchase, Electrolux will pay all costs for repairing or replacing any parts of this appliance that prove to be defective in materials or workmanship when such appliance is installed, used and maintained in accordance with the provided instructions.

Exclusions

This warranty does not cover the following:

1. Products with original serial numbers that have been removed, altered or cannot be readily determined.
2. Product that has been transferred from its original owner to another party or removed outside the USA or Canada.
3. Rust on the interior or exterior of the unit.
4. Products purchased "as-is" are not covered by this warranty.
5. Food loss due to any refrigerator or freezer failures.
6. Products used in a commercial setting.
7. Service calls which do not involve malfunction or defects in materials or workmanship, or for appliances not in ordinary household use or used other than in accordance with the provided instructions.
8. Service calls to correct the installation of your appliance or to instruct you how to use your appliance.
9. Expenses for making the appliance accessible for servicing, such as removal of trim, cupboards, shelves, etc., which are not a part of the appliance when it is shipped from the factory.
10. Service calls to repair or replace appliance light bulbs, air filters, water filters, other consumables, or knobs, handles, or other cosmetic parts.
11. Surcharges including, but not limited to, any after hour, weekend, or holiday service calls, tolls, ferry trip charges, or mileage expense for service calls to remote areas, including the state of Alaska.
12. Damages to the finish of appliance or home incurred during installation, including but not limited to floors, cabinets, walls, etc.
13. Damages caused by: services performed by unauthorized service companies; use of parts other than genuine Electrolux parts or parts obtained from persons other than authorized service companies; or external causes such as abuse, misuse, inadequate power supply, accidents, fires, or acts of God.

DISCLAIMER OF IMPLIED WARRANTIES; LIMITATION OF REMEDIES

CUSTOMER'S SOLE AND EXCLUSIVE REMEDY UNDER THIS LIMITED WARRANTY SHALL BE PRODUCT REPAIR OR REPLACEMENT AS PROVIDED HEREIN. CLAIMS BASED ON IMPLIED WARRANTIES, INCLUDING WARRANTIES OF MERCHANTABILITY OR FITNESS FOR A PARTICULAR PURPOSE, ARE LIMITED TO ONE YEAR OR THE SHORTEST PERIOD ALLOWED BY LAW, BUT NOT LESS THAN ONE YEAR. ELECTROLUX SHALL NOT BE LIABLE FOR CONSEQUENTIAL OR INCIDENTAL DAMAGES SUCH AS PROPERTY DAMAGE AND INCIDENTAL EXPENSES RESULTING FROM ANY BREACH OF THIS WRITTEN LIMITED WARRANTY OR ANY IMPLIED WARRANTY. SOME STATES AND PROVINCES DO NOT ALLOW THE EXCLUSION OR LIMITATION OF INCIDENTAL OR CONSEQUENTIAL DAMAGES, OR LIMITATIONS ON THE DURATION OF IMPLIED WARRANTIES, SO THESE LIMITATIONS OR EXCLUSIONS MAY NOT APPLY TO YOU. THIS WRITTEN WARRANTY GIVES YOU SPECIFIC LEGAL RIGHTS. YOU MAY ALSO HAVE OTHER RIGHTS THAT VARY FROM STATE TO STATE.

If You Need Service

Keep your receipt, delivery slip, or some other appropriate payment record to establish the warranty period should service be required. If service is performed, it is in your best interest to obtain and keep all receipts. Service under this warranty must be obtained by contacting Electrolux at the addresses or phone numbers below.

This warranty only applies in the USA and Canada. In the USA, your appliance is warranted by Electrolux Major Appliances North America, a division of Electrolux Home Products, Inc. In Canada, your appliance is warranted by Electrolux Canada Corp. Electrolux authorizes no person to change or add to any obligations under this warranty. Obligations for service and parts under this warranty must be performed by Electrolux or an authorized service company. Product features or specifications as described or illustrated are subject to change without notice.

USA
1.800.374.4432
Frigidaire
10200 David Taylor Drive
Charlotte, NC 28262

Electrolux

Canada
1.800.265.8352
Electrolux Canada Corp.
5855 Terry Fox Way
Mississauga, Ontario, Canada
L5V 3E4