Parts:

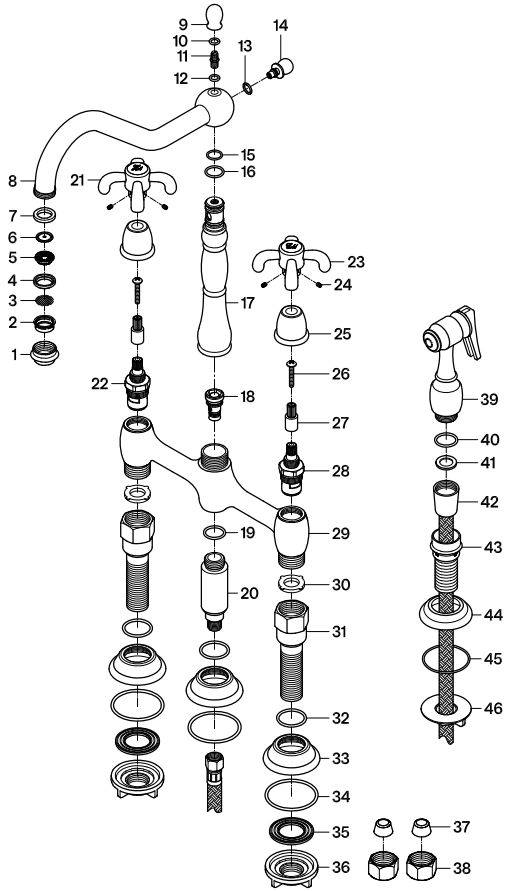

Replacement Parts:

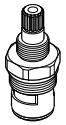

Hot Cartridge: KSRPL2000HC

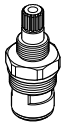

Cold Cartridge: KSRPL2000CC

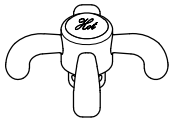

Hot Handle: KSH7981TXH

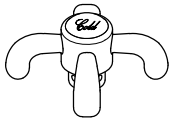

Cold Handle: KSH7981TXC

KINGSTON

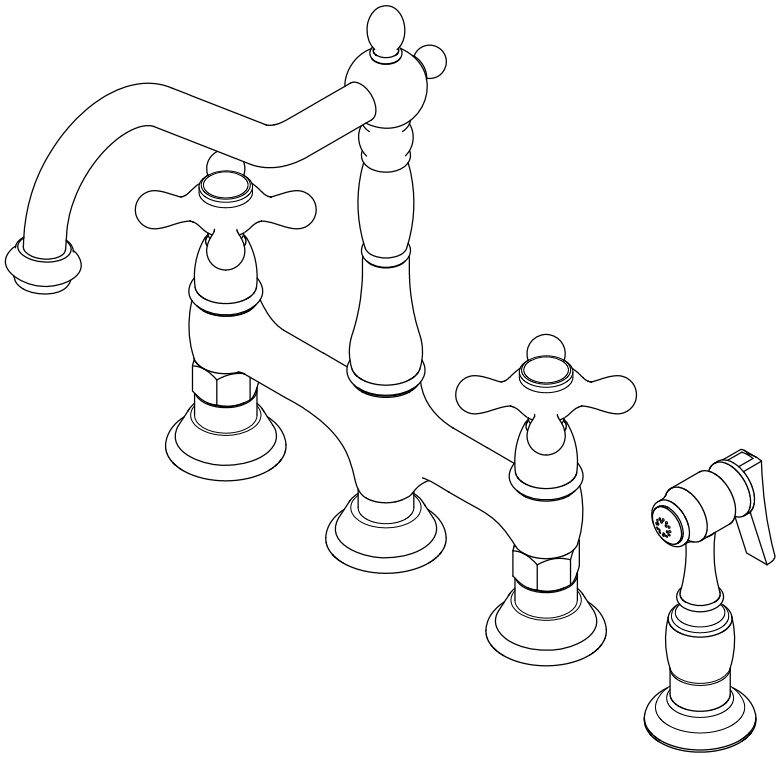

CARE AND MAINTENANCE OF YOUR FAUCET

Your KINGSTON faucet has been finished to the most strict standards; however, due to the high content of minerals in the water, your finish may appear dull and tarnished after time. These are some do's and don'ts to maintain the luster on your faucet for many years to come.

DO
1. Use a silicon based caulking when installing.
2. Clean your faucet with only a mild soap and water solution.
3. Dry your faucet after using it.
4. Give it a coat of Carnauba Wax periodically.

DON'T
1. Use plumbers putty when installing the faucet.
2. Use any abrasive cleaning agents.

It may seem like a very simple and short list but it is that simple to maintain your faucet, looking shiny and new.

If your faucet is already looking somewhat dull and tarnished, before replacing it, try cleaning it with a 50/50 solution of vinegar and water, you may need to soak some rags and wrap around those stubborn areas, leave
overnight and rinse completely in the morning, apply Carnauba wax once you have removed the mineral deposits.

Parts:

Washer & Lock Nut	Cone Washer & Coupling Nut
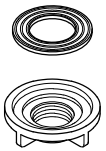	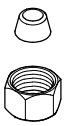
2 Pcs	2 Pcs

www.kingstonbrass.com

TOLL-FREE CUSTOMER SERVICE: 1-877-2-KBRASS
TECHNICAL SUPPORT E-mail: service@kingstonbrass.com
12775 Reservoir Street, Chino, CA 91710

NOTICE

Failure to follow all directions may cause leaks which may result in water damage

KINGSTON

INSTALLATION INSTRUCTIONS
Twin Handles Kitchen Faucet with Sprayer

BEFORE BEGINNING INSTALLATION:

1. Flush plumbing lines to clear any debris.
2. Shut off both supply lines after flushing.

Need Tools:



Basin Wrench | Adjustable Wrench | Teflon Tape | Silicone Sealant | Screwdriver

1

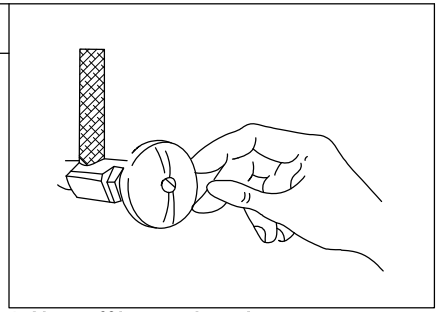

1. Shut off hot and cold water supply under sink. Plug sink drain with cloth to avoid losing small parts. Remove old faucet.

2

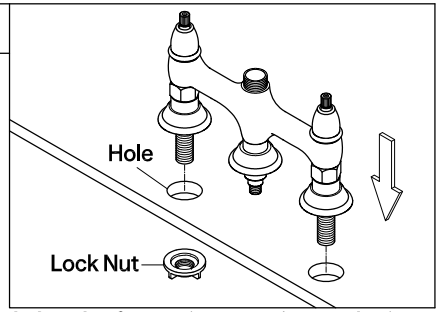

2. Set the faucet in place, insert the inlet shanks through the sink holes, and press down. Assemble the washers and lock nuts on the inlet shanks, and then tighten the nuts by hand.

3

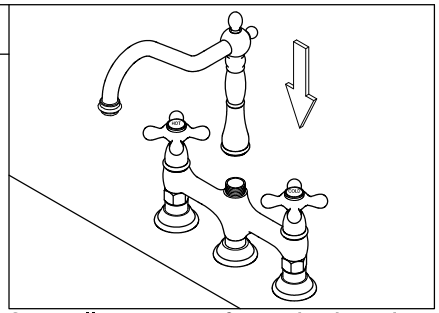

3. Install spout onto faucet body and tighten it.

4

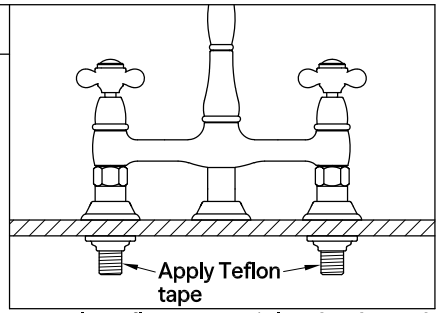

4. Apply Teflon tape to inlet shanks and connect supply lines.

5

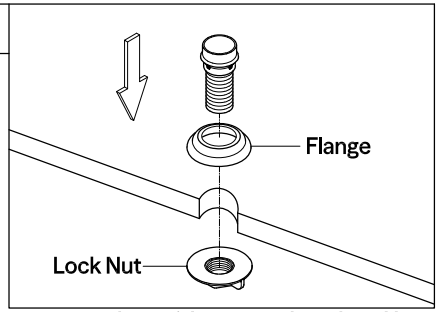

5. For models with a spray head and hose, insert the spray guide through the fourth hole in the sink, then screw the lock nut onto the shank and tighten it firmly.

6

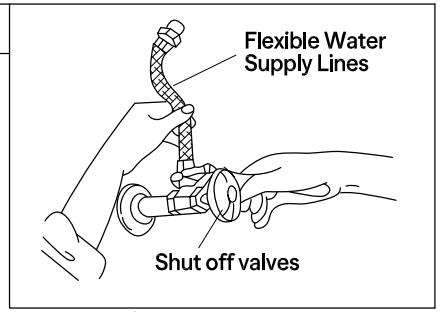

6. Apply Teflon tape to threads on faucet shank and shut off valves, connect water supply line.

7

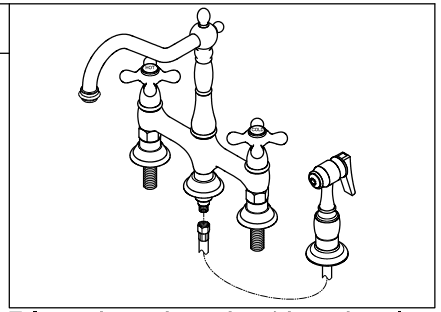

7. Insert hose through guide and apply Teflon tape to sprayer shank. Attach hose to sprayer shank.

8

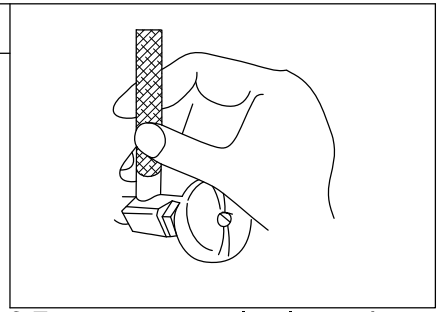

8. Turn on water supply valves and check for leaks, especially all supply line connections.

9

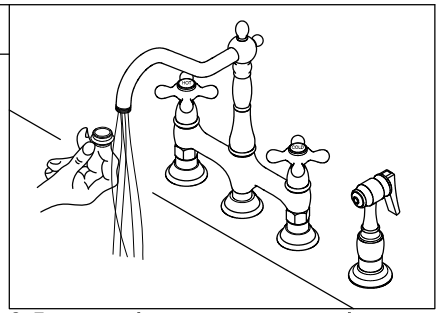

9. Remove the aerator, turn on the faucet, let water run for at least one minute, this will clear any debris left in the line, reinstall aerator.

Warning!!!

- Do not over-tighten nut during installation.
- Over-tighten may crack the valve and cause severe leak.

10

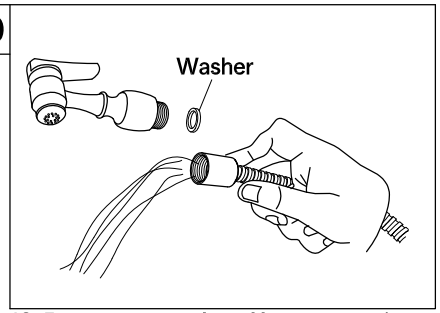

10. Remove spray head by unscrewing the sprayer in a counter clockwise direction, turn on both hot and cold valves and let water run for at least one minute, this will clear any debris left in the line.
Then place rubber washer to end of spray hose and attach sprayer.

©2025 LVC Kingston LLC. All Rights Reserved.
2025-08-DG