PRORUN®

GAS///

# LAWN TRACTOR

## 546 CC 42-in

## MODEL: PLT42LH2

# OPERATOR'S MANUAL

**IMPORTANT!**
**ENGINE REQUIRES**
**OIL BEFORE**
**OPERATION**




Everything PRORUN

**Before using, read the instructions.**

⚠ **IMPORTANT – READ CAREFULLY BEFORE USE.**

⚠ **IMPORTANT SAFETY INSTRUCTIONS – SAVE THESE INSTRUCTIONS**

**WARNING:** To reduce the risk of injury, the user must read and understand the User manual before using this product. Keep these instructions for future reference.

Please let us know what you think. To leave a comment and see our complete product line, Visit:

**PRORUNTOOLS.COM** ★★★★★

1-844-905-0882, info@proruntech.com

**Version: A – Issue Date: 1/14/2026**

# 1. PRODUCT SPECIFICATIONS

**MODEL**

| Model | PLT42LH2 |
|---|---|

**ENGINE**

| | |
|---|---|
| Engine Model | Loncin LC1P91F |
| Engine Displacement | 546 CC |
| Nominal Power | 8.3 kW |
| Fuel Type | Unleaded gasoline (Minimum 90 octane) |
| Fuel Tank Capacity | Gasoline, capacity 7.5 L |
| Engine Oil Type | SAE 30 |
| Engine Oil Capacity | 1.6 L |
| Spark Plug | F7RTC or equivalent |
| Spark Plug Gap | 0.60-0.80 mm (0.023-0.031 in) |

**CUTTING SYSTEM**

| | |
|---|---|
| Blade Model | Twin blades |
| Cutting Width | 108 cm (42” in) |
| Cutting Height | 30-90 mm (1.2”-3.5” in), 7 positions |
| Blade Screw Torque | 40-45 Nm |
| Deck Belt | V-belt 4L920 |

**TRANSMISSION & DRIVE**

| | |
|---|---|
| Transmission | Hydrostatic |
| Forward travel speed | Up to 8.8 km/h (5.5 mph) |
| Reverse travel speed | Up to 4.5 km/h (2.8 mph) |
| Minimum Turning Radius | 45 cm (17.7” in) |

**WHEELS**

| | |
|---|---|
| Front Tires | 15” x 6.00-6 |
| Rear Tires | 18” x 8.50-8 |
| Recommended Front Tire Pressure | 1.2 bar (17.7 PSI) |
| Recommended Rear Tire Pressure | 1.0 bar (14.5 PSI) |

**ELECTRICAL**

| | |
|---|---|
| System | 12V DC |
| Battery | 12V 18 Ah |

**NOISE & VIBRATION**

| | |
|---|---|
| Sound Pressure at Operator | LpA: 87 dB(A), KpA: 3 dB(A) |
| Measured Sound Power | LwA: 98.8 dB(A), KwA: 1.11 dB(A) |
| Guaranteed Sound Power (2000/14/EC): | LwA: 100 dB(A) |
| Vibration – Hand-arm: | Ah: 3.4 m/s², Kh: 1.5 m/s² |
| Vibration – Whole body: | Ah: 1.1 m/s², Kh: 1.5 m/s² |

**MASS**

| | |
|---|---|
| Weight | 170 kg (374.78 lbs) |

## 2. TABLE OF CONTENTS


1. PRODUCT SPECIFICATIONS 2
2. TABLE OF CONTENTS 3
3. GENERAL WARNINGS 4
4. GENERAL SAFETY REGULATIONS 5
5. SYMBOLS 10
6. SET UP 15
7. CONTROLS AND OPERATIONS 24
8. MAINTENANCE 40
9. TROUBLESHOOTING 46
10. EXPLODED VIEWS AND PARTS 52
11. WARRANTY 74
12. ENGINE MANUAL 77

# 3. GENERAL WARNINGS

⚠ **WARNING!**

**FOLLOW THESE INSTRUCTIONS CAREFULLY!**

Before operating this tractor mower, read and understand the installation and operation instructions in this manual. Familiarize yourself with how the machine works. Failure to follow these instructions may result in electric shock, fire, or serious injury.

⚠ **WARNING!**

This machine is capable of *amputating hands* and feet and *throwing objects*.
Failure to observe the following safety instructions could result in serious injury or death.

1. Always keep these operating instructions in a safe place for future reference.
2. If you transfer the machine to another person, include this manual.
3. Follow all safety and warning information provided in this manual.
4. Tractor mowers may vary in equipment level. Illustrations may differ from your model. Contact a qualified service center or the manufacturer if you have difficulty following the instructions.
5. Follow the supplied assembly instructions carefully.

⚠ **HAZARD!**

Read this instruction manual completely. Observe all **SAFETY PRECAUTIONS** before, during, and after using the machine.
Keep this manual and all attachments for future reference.
If ownership changes, this manual must be handed over with the machine.

## HOW TO READ THE MANUAL

Important safety and operational information is highlighted using the following terms:

- **NOTE / WARNING/ IMPORTANT / HAZARD / CAUTION –** Provides details or additional information to prevent damage to the machine.
- **WARNING! –** Ignoring this will result in a risk of injury to yourself or others.
- **DANGER! –** Ignoring this will result in a risk of serious injury or death to yourself or others

⚠ **NOTE:**

All references to positions on the machine—such as *front*, *rear*, *left,* or *right*—are based on the direction of forward travel.

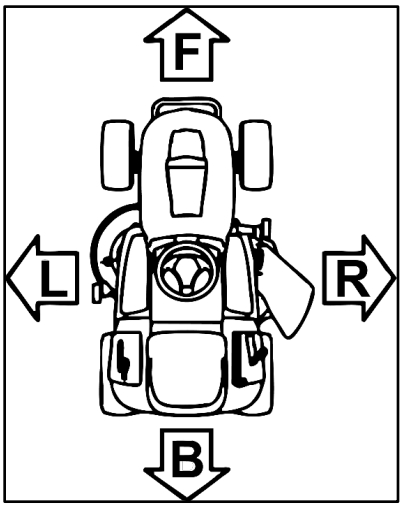


⚠ **IMPORTANT!**

For any engine-related operations or maintenance procedures not covered in this manual, refer to the engine manufacturer's documentation. These manuals are an essential part of the complete set of instructions provided with the machine.

# 4. GENERAL SAFETY REGULATIONS

⚠ **WARNING!**

**Read Before Use**

Read and understand this manual before operating the machine. Failure to follow these instructions can result in electric shock, fire, serious injury, or death.

⚠ **WARNING!**

**Bystander Safety**

Never mow while people—especially children—or pets are nearby. Keep bystanders at a safe distance.

## OPERATOR RESPONSIBILITIES

1. Read, understand, and follow all instructions and warning labels on the machine, engine, and attachments.
2. Operate the equipment only if you are trained, responsible, and physically capable.
3. Do not allow children or untrained people to operate the machine. Observe all age restrictions per local regulations.
4. The operator is responsible for accidents or hazards affecting others or their property.
5. Do not carry passengers. Keep bystanders away.
6. Operate only in daylight or with adequate artificial lighting.

## TRAINING & PREPARATION

1. Receive professional instruction emphasizing careful, focused operation of ride-on machines.
2. Understand that brakes cannot regain control if the machine slides on a slope. Common causes of loss of control include insufficient traction, excessive speed, inadequate braking, unsuitable machine selection, unfamiliar terrain (especially slopes), and incorrect hitching or load distribution.
3. Wear sturdy, non-slip footwear and appropriate protective clothing. Do not operate barefoot, in sandals, or with loose clothing.
4. Use approved hearing protection and eye/face protection.
5. Inspect the work area and remove objects that could be thrown or interfere with the operation.

## DESIGNATED USE

This tractor mower is intended for mowing domestic lawns and gardens with slopes up to 27% (15°). Additional applications (e.g., mulching) are permitted only with original accessories and within specified load limits.

Commercial use, unauthorized modifications, or add-ons are prohibited and void the warranty and conformity. The manufacturer declines responsibility for damage or injury resulting from misuse.

## POSSIBLE MISUSE

Not designed for commercial use in public parks, sports grounds, agriculture, or forestry.

## OPERATOR SAFETY

1. Keep hands and feet away from rotating parts and the discharge opening.
2. Clear the area of debris before mowing.
3. Do not mow in reverse unless necessary. Always look down and behind when reversing.
4. Comply with local minimum-age regulations. Children and untrained persons must not use the machine.
5. Do not operate during thunderstorms; the machine offers no protection against lightning.
6. Do not exceed slope limits: longitudinal ≤ 27% (15°); lateral ≤ 18% (10°). Never mow across slopes.
7. Do not operate when fatigued, ill, or under the influence of alcohol, drugs, or medications that impair reaction or focus.
8. Use only genuine spare parts and accessories.
9. Repairs must be performed by the manufacturer or an authorized service center.
10. The mower is not approved for road use; do not drive on public roads.
11. Operate only in well-ventilated areas; exhaust gases contain carbon monoxide, a deadly poison.
12. Do not alter engine speed-governor settings.
13. Do not operate without the grass catcher, discharge chute, and other safety devices installed and functioning. Inspect regularly and replace if worn.
14. Avoid discharging material toward people or obstacles; stop blades when crossing gravel.
15. Limit exposure to noise and vibration—use PPE, operate in low-vibration modes when possible, and plan work to reduce exposure. Prolonged vibration may contribute to hand–arm vibration syndrome (HAVS); wear gloves and keep hands warm.

## CHILDREN SPECIFICS

1. Children are often attracted to machines and mowing activities. Never assume they will stay where last seen.
2. Keep children out of the operating area under the supervision of a responsible adult other than the operator.
3. Never carry children, even with blades disengaged; they can fall or interfere with safe operation.

## FUEL & FIRE SAFETY

⚠ **HAZARD!**

**Gasoline Is Highly Flammable**

1. Use only approved fuel containers.
2. Refuel outdoors with the engine off and cool. No smoking during refueling.
3. Do not remove the fuel cap or add fuel while the engine is running or hot.
4. Do not refuel or store fuel in enclosed spaces. Keep away from open flames, sparks, and pilot lights.
5. If fuel is spilled, do not start the engine. Move the machine away and wait until the vapors dissipate.
6. Prevent fires: keep the machine free of grass, leaves, and debris; clean up oil/fuel spills; allow the unit to cool before storage.
7. Securely tighten fuel-tank and container caps after refueling.

8. Replace a damaged or faulty muffler immediately.

## PRE-START & OPERATING RULES

1. Operate only in adequate lighting.
2. Before starting, disengage blades, set the gear to neutral (N), and engage the parking brake.
3. Avoid mowing wet grass whenever possible.
4. Do not operate on excessively steep slopes; follow the limits stated in this manual.

⚠ **CAUTION!**

**Overturning Risk on Slopes**

- Longitudinal slopes must not exceed 27% (15°).
- Lateral slopes must not exceed 18% (10°).
- There is no “safe” slope—use increased caution and experience on any gradient.

## SLOPE SAFETY

1. Follow the manufacturer-recommended direction of travel on slopes. Use caution near drop-offs.
2. Do not operate where traction, steering, or stability is questionable. Tires may slide even when the wheels stop.
3. Avoid starting/stopping on slopes; make changes in speed/direction slowly and gradually.
4. Mow up and down the slope—never across.
5. Keep transmission engaged on descents; do not coast in neutral (N).
6. Reduce speed on slopes and sharp turns.
7. Watch for mounds, bumps, and hidden hazards.

## TOWING & LOADS (IF APPLICABLE)

1. Use only approved drawbar hitch points.
2. Do not exceed recommended towed weight limits, especially on slopes.
3. Do not turn sharply; use caution when reversing.
4. Install counterweights or wheel weights if recommended.
5. Avoid holes, ruts, rocks, and uneven terrain that can cause overturning or loss of footing.

## LEAVING THE OPERATOR’S SEAT

**BEFORE LEAVING THE MACHINE:**

1. Set the gear to neutral (N) and engage the parking brake.
2. Disengage blades and lower the deck.
3. Stop the engine and remove the key.

## BLADE SAFETY

⚠ **HAZARD!**

**SHARP BLADES**

- Wait for blades and all moving parts to stop completely before touching. Blades may continue to rotate after shutdown.

- Keep hands and feet away from blades and the discharge opening.
- Disengage blades during transport and whenever not in use.
- For inspection, cleaning, or repair: stop engine, remove key, disconnect spark plug wire, and keep the cap away from the plug to prevent accidental starting.
- Wrap blades or wear heavy gloves when servicing. Replace damaged blades; do not repair or alter blades.
- Inspect blades, fasteners, and cutters before use. Replace worn/damaged components in matched sets to maintain balance. Repairs must be performed by an authorized service center.

## GENERAL MAINTENANCE

1. Keep all fasteners tight to maintain safe operation.
2. Allow the engine to cool completely before cleaning, adjustment, or repair.
3. Store the mower only after cooling; fumes can reach ignition sources.
4. Keep the engine, muffler, battery compartment, and fuel areas free of debris and grease to reduce fire risk.
5. Use only original spare parts; non-original parts may not fit properly and can create hazards.
6. If the machine must be parked, stored, or left unattended, lower the deck and remove the key.
7. Regularly check the tightness of the blade and engine-mounting bolts.
8. Blade sharpening and balancing require special tools and expertise—have these services performed by a qualified after-sales center.

## MACHINE SAFETY SYSTEMS

The machine includes interlocks that prevent engine start unless all safety conditions are met:

- Start switch in the end position
- Parking brake engaged
- Cutting blades disengaged
- Forward/reverse pedal in neutral

The engine will shut down if the operator leaves the seat with blades engaged.

⚠ **WARNING!**

**Do Not Tamper:**

Do not alter safety switches, wiring, or interlocks. If a safety device is suspected of being faulty, do not use the machine. Contact **PRORUN Customer Service** or an authorized service center.

## PROTECTIVE DEVICES

Do not operate with protective devices removed or damaged. Repair or replace immediately. Protective devices include:

- Brake interlock switch
- Blade engagement (mower mechanism) switch
- Seat switch
- Mower deck covers
- Belt guard

## OVERLOADING & INCLINES

⚠ **WARNING!**

**OVERLOADING HAZARD:**

Do not exceed permissible inclines/declines or load limits. Exceeding these values can overwhelm braking capacity and create dangerous situations.

## ROAD USE

⚠ **NOTE:**

The ride-on mower is not approved for road use and must not be driven on public roads.

# 5. SYMBOLS

Your machine is equipped with safety labels featuring illustrations to remind you of essential precautions during operation. These labels are considered an integral part of the machine. If a label becomes damaged, illegible, or detached, contact **PRORUN Customer Service** for a replacement.

Below are the symbols and their meanings:

| SYMBOL | MEANING |
|---|---|
|  | **READ MANUAL**<br>(Read the operator's manual before use.) |
|  | **DISCONNECT BEFORE SERVICE**<br>(Disconnect the ignition key before maintenance.) |
|  | **NO STEP**<br>(Do not step on the deck or discharge guard.) |
|  | **DISCHARGE GUARD REQUIRED**<br>(Ejected objects: Do not operate without a discharge guard or a grass catcher.) |
|  | **KEEP BYSTANDERS AWAY**<br>(Maintain a safe distance during operation) |
| 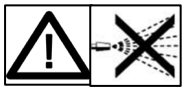 | **NO PRESSURE WASH**<br>(Do not use pressure washers on the transmission.) |
|  | **HOT ENGINE**<br>(Allow the engine to cool before servicing.) |
|  | **SLOPE LIMIT**<br>(Avoid slopes over 15° (longitudinal) or 10° (lateral).) |
|  | **NO PASSENGERS**<br>(Never carry passengers or children.) |

| | |
|---|---|
| 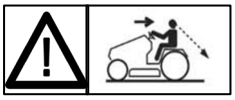 | **REVERSE WITH CAUTION**<br>(Use caution when reversing—check behind.) |
|  | **KEEP CLEAR OF BLADES**<br>(Rotating blades: Keep hands and feet away from rotating blades.) |
|  | **DO NOT REMOVE SHIELDS**<br>(Keep safety guards in place) |
|  | **HEARING PROTECTION**<br>(Wear approved hearing protection.) |

## LABEL POSITION

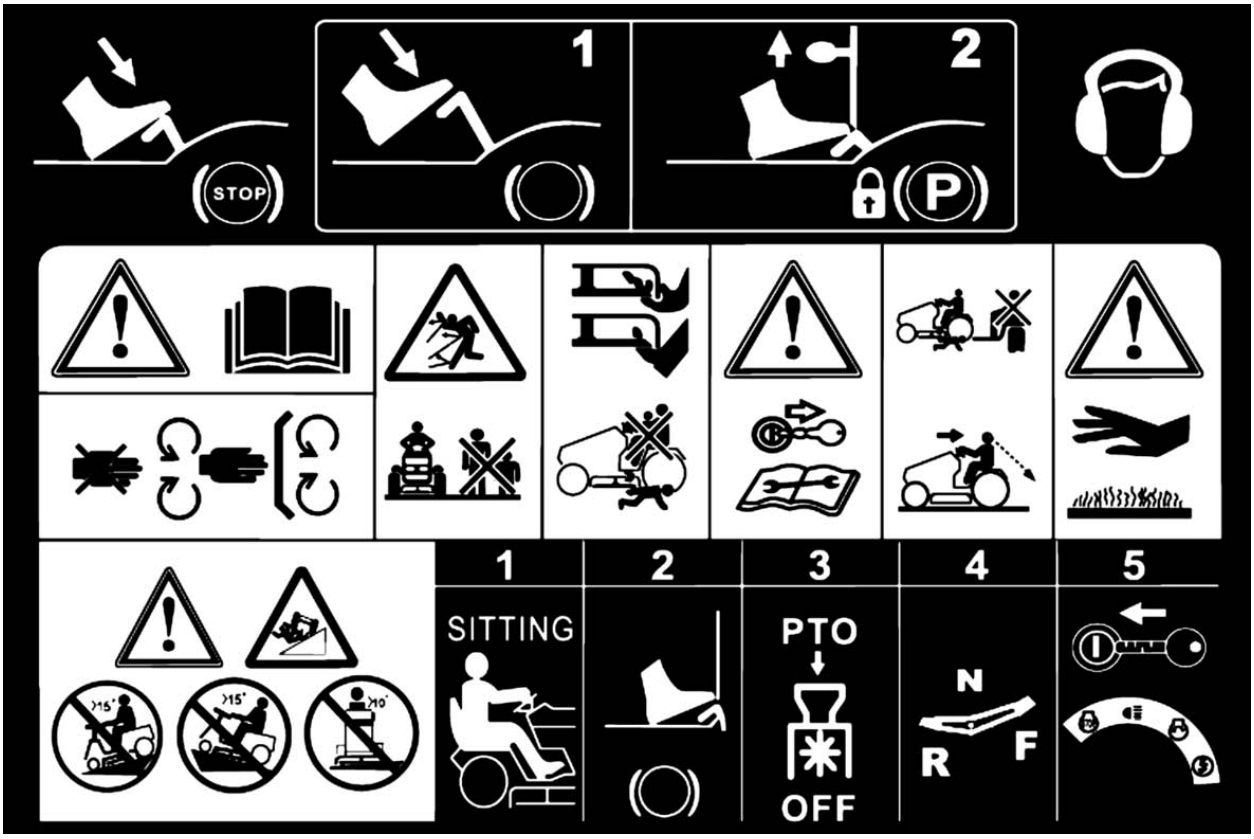


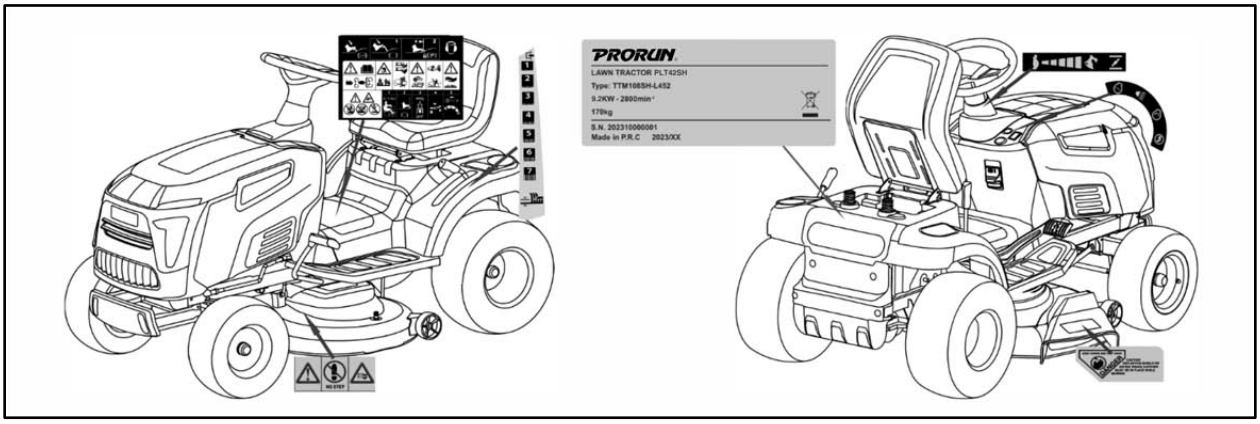

## IDENTIFICATION OF THE MAIN COMPONENTS

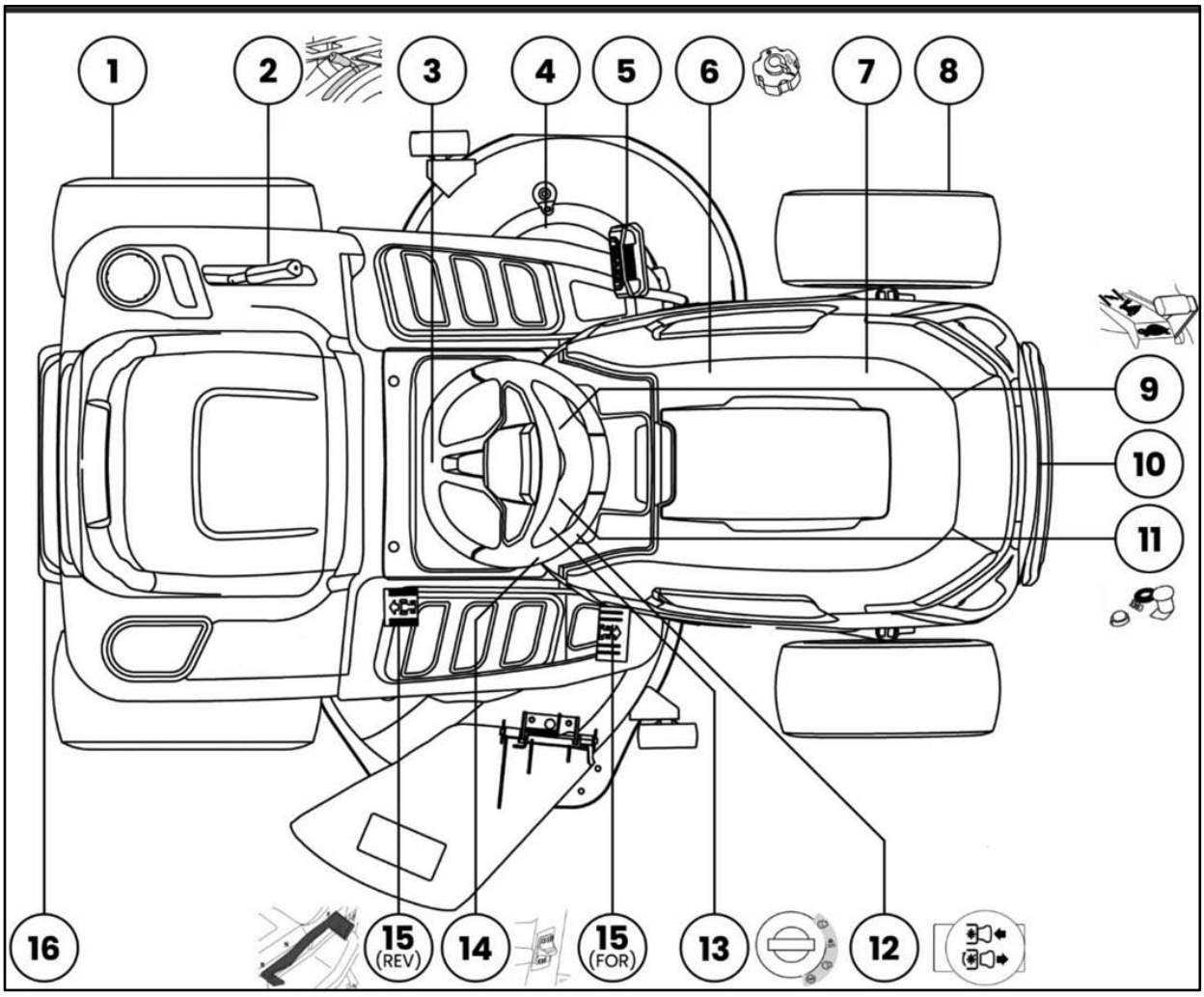

| # | NAME |
|---|---|
| 1 | Rear Wheels |
| 2 | Cutting Height Adjustment Lever |
| 3 | Steering Wheel |
| 4 | Deck |
| 5 | Brake Pedal |
| 6 | Fuel Cap/ Fuel Shut Off Valve (under Engine Cover) |
| 7 | Engine Cover |
| 8 | Front Wheels |
| 9 | Throttle Lever |
| 10 | Guard Plate |
| 11 | Reverse Mode Operation Button |
| 12 | Blade Start / Stop Knob |
| 13 | Key - Ignition Switch |
| 14 | Park Brake Lever |
| 15 | Drive Engagement (F - N - R) |
| 16 | Hydrostatic Transmission Disengagement |

# 6. SETUP

## UNPACKING AND ASSEMBLY

### OPENING THE PACKAGING:

Your machine is shipped partially assembled and secured in a metal crate to ensure protection during transport. The packaged unit will appear as shown in Figure 1.

⚠ **CAUTION!**

**Wear Heavy Gloves**

To prevent injury during unpacking, always wear heavy-duty gloves.

**Steps:**

1. Remove all shrink wrap and cut the three plastic straps securing the package.
2. Lift off the corrugated outer cover assembly.
3. Remove the six screws located near the front of the tractor (Figure 2A) and take out the wooden cross plank from the base pallet (Figure 2B).

⚠ **CAUTION!**

**Prevent Deck Damage**

Before driving the tractor off the wooden base platform, raise the cutting deck to its maximum height. This prevents damage to the deck and blades during removal.

Perform this operation slowly and carefully to avoid equipment damage or personal injury.

Fig 1A

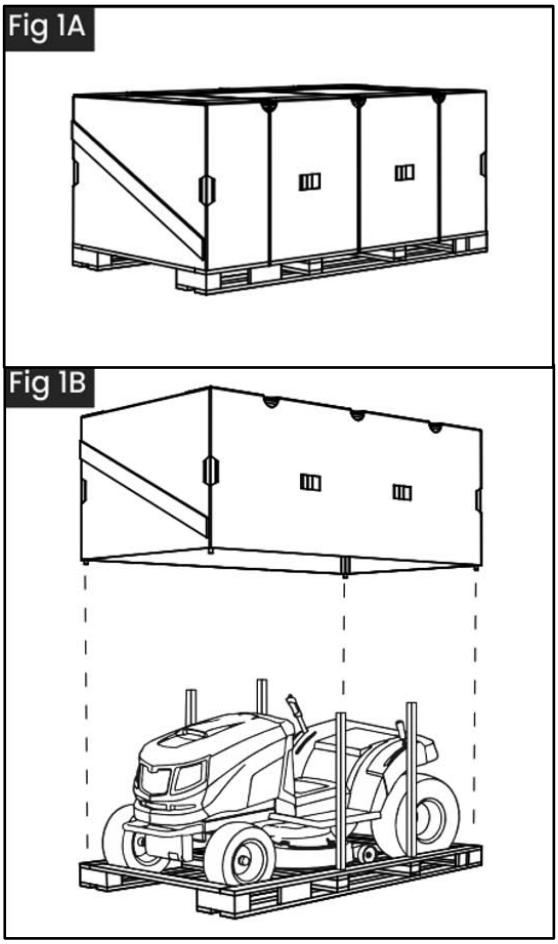

Fig 1B



Fig 2A

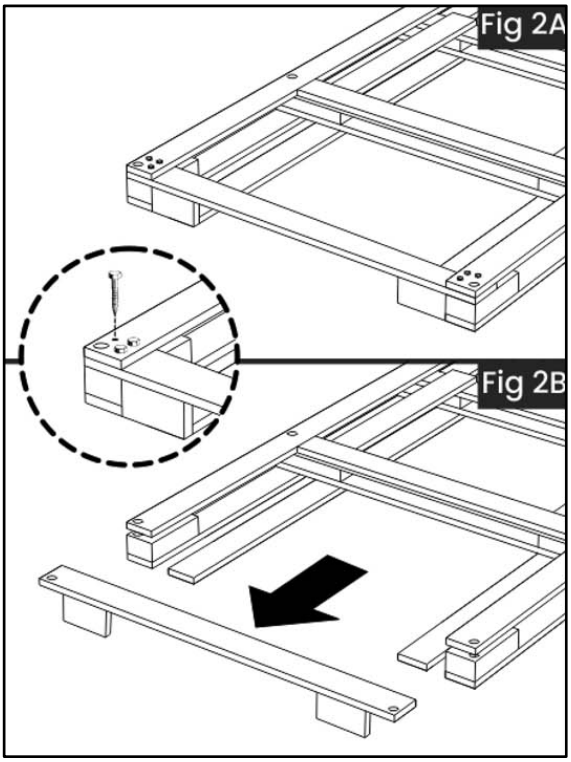

Fig 2B

## MACHINE PARTS

When unpacking the machine, ensure all individual parts and fittings are collected. Take care not to damage the cutting deck when removing the machine from the pallet.

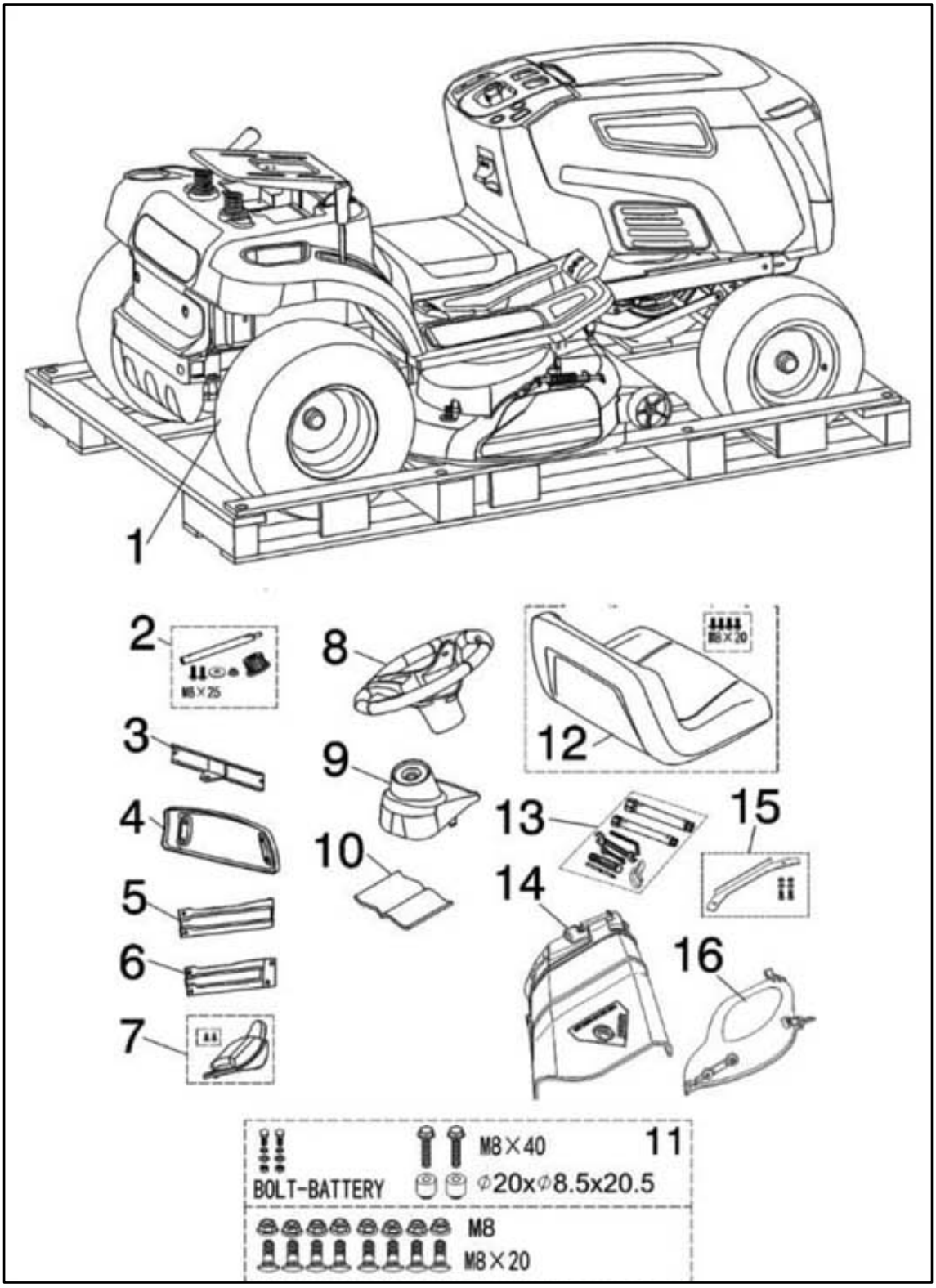

## Included Components

| # | NAME | DESCRIPTION |
|---|---|---|
| 1 | Machine | Main tractor unit |
| 2 | Steering Connection | Shaft and splined hub for steering assembly |
| 3 | Towing Kit | Components for towing functionality |
| 4 | Bumper | Front protective bumper |
| 5 | Bumper Bracket (Left) | Left-side mounting bracket for bumper |
| 6 | Bumper Bracket (Right) | Right-side mounting bracket for bumper |
| 7 | Steering Wheel Cover | Protective cover for the steering wheel. |
| 8 | Steering Wheel | Operator control for maneuvering the machine. |
| 9 | Steering Shaft Cover | Protective cover for steering shaft. |
| 10 | Operator's Manual | Instruction guide for safe operation and maintenance. |
| 11 | Hardware Set | Nuts, bolts, washers, and bushings for assembly. |
| 12 | Seat | Operator seating component. |
| 13 | Tools and Starter Key | Basic tools and ignition key for setup and operation. |
| 14 | Side Deflector | Grass discharge deflector for side ejection. |
| 15 | Deck Fixing Plate | Mounting plate for securing the cutting deck. |
| 16 | Mulching Kit | Components for mulching functionality. |

⚠ **NOTE:**
To prevent damage to the cutting deck, raise it to its maximum height before removing the machine from the pallet. Handle the machine carefully during this process.

# MACHINE ASSEMBLY

## FITTING THE STEERING WHEEL

Place the machine on a flat surface and ensure the front wheels are straight.

**STEPS**:

1. **INSTALL THE STEERING SHAFT**
   Fit the shaft **(A)** onto the couplings and tighten the M8x25 screw **(B)** using the 8–10 mm open-end wrench provided in the accessory tool kit.

2. **ATTACH THE STEERING SHAFT COVER**
   Fit the steering shaft cover **(C)** securely over the shaft.

3. **MOUNT STEERING WHEEL ASSEMBLY**
   Insert the splined hub **(D)** into the shaft **(A)**, then mount the steering wheel **(E)**, spacer **(F)**, and tighten the nut MS **(G)** using the 13–15 mm open-end wrench from the accessory tool kit.

4. **INSTALL STEERING WHEEL COVER**
   Insert the steering wheel cover **(H)** into the steering wheel and tighten the two screws ST4.8×16 **(I)** using the Phillips screwdriver provided in the accessory tool kit.

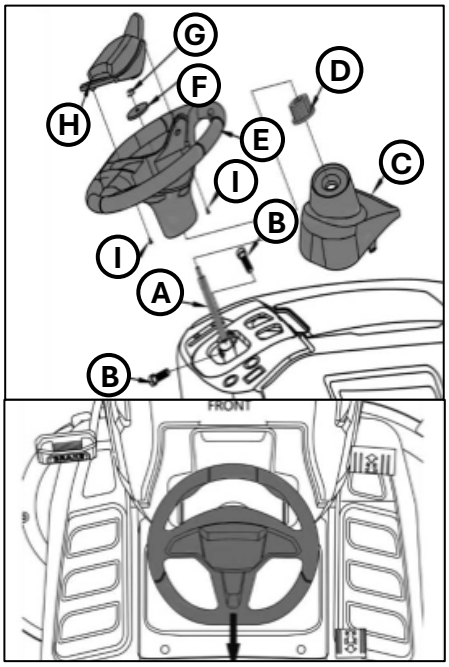


⚠ **NOTE**

Ensure correct orientation of all parts during assembly.

## THE DECK WHEELS ASSEMBLY

1. Assemble the two deck wheels using the designated pins, lock nuts, and bolts as illustrated in the assembly diagram.

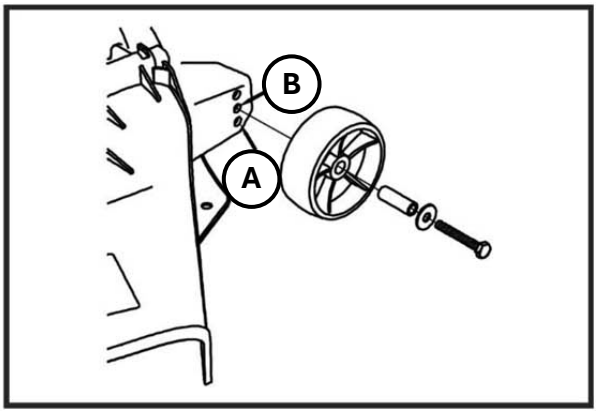

## FITTING THE SEAT AND OPERATOR PRESENCE SWITCH

**STEPS:**

1. **REMOVE FASTENERS**
   Unfasten the two M8 nuts and bolts **(A)** from the seat brackets located on top of the mower using the 13–15 mm open-end wrench provided in the accessory tool kit.

2. **INSTALL SEAT**
   Position the seat onto the seat brackets and secure it using the previously removed M8 nuts and bolts **(A)** as shown in the illustration.

3. **CONNECT OPERATOR PRESENCE SWITCH**
   Attach the wire harness **(B)** to the operator presence switch **(C)** located under the seat. Ensure the connection is fully engaged.

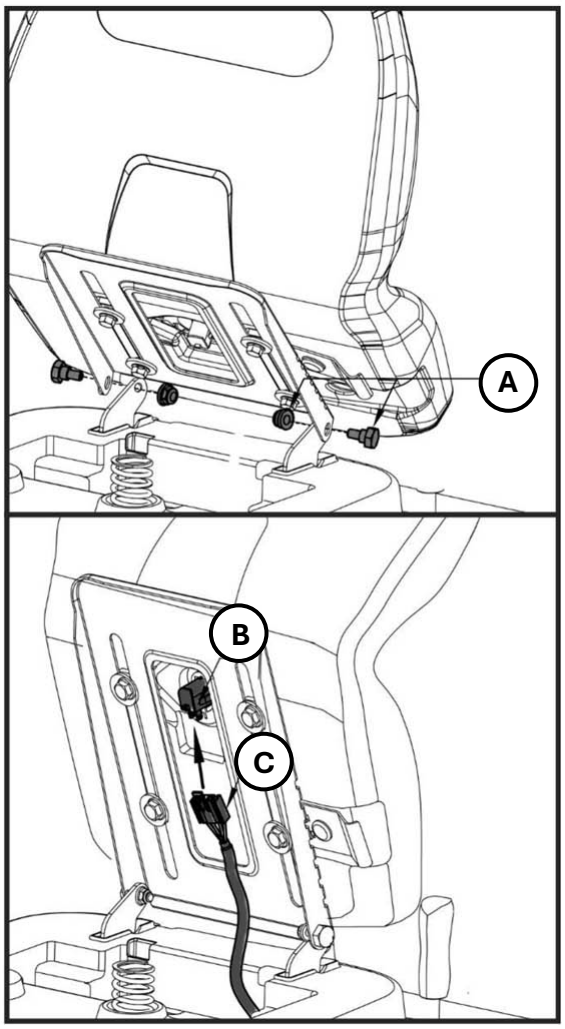


⚠ **NOTE:**
Verify that the electrical connection is complete before operating the machine.

⚠ **IMPORTANT**
The total weight—including the operator, trailer, and load—must not exceed 136 kg (300 lbs.). Refer to Regulations for Towing for complete details.

## CONNECTING THE BATTERY

⚠ **HAZARD!**

**SULFURIC ACID**

- **Poisonous:** Electrolyte fluid contains sulfuric acid.
- **Corrosive:** Can cause blindness or severe burns.
- **Environmental Warning:** Never dispose of the battery improperly. Follow local regulations for battery disposal.

**STEPS:**

1. **FIT THE BATTERY**
   Place the battery securely in its designated housing.

2. **CONNECT BATTERY LEADS**
   - Position the battery with the correct polarity as indicated.

- Connect the battery connectors to the machine's leads and tighten the two screws using the 8–10 mm open-end wrench and Phillips screwdriver from the accessory tool kit.
- Cover the terminals with protective caps.

**3. SECURE THE BATTERY**

Fasten the battery in place using the provided rubber strap.

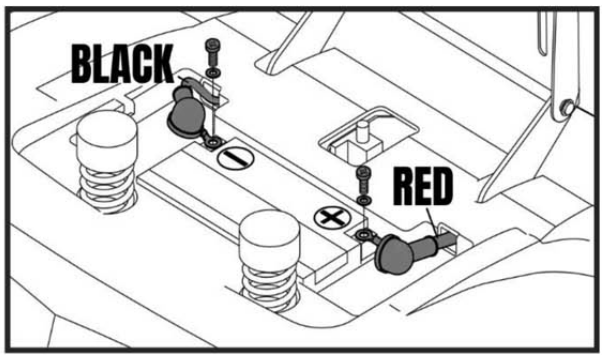


⚠ **NOTE:**

This machine uses a 12V / 18Ah battery. The battery is fully charged at the factory. If charging is required, use a 12V 1A charger.

## MOUNTING THE FRONT BUMPER

**STEPS:**

**1. ATTACH BUMPER BRACKETS**

Mount the left bumper bracket and right bumper bracket onto the bumper using four M8 nuts and four M8 × 20 screws. Tighten securely with the 13–15 mm open-end wrench provided in the accessory tool kit.

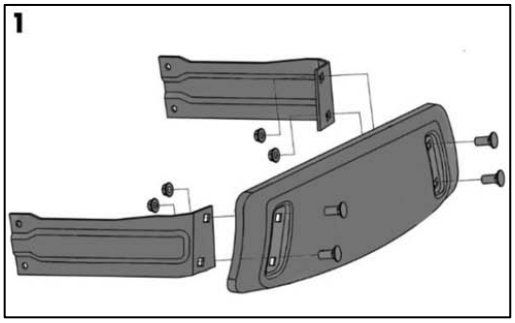


**2. INSTALL FRONT BUMPER**

Position the bumper assembly on the bottom of the frame and secure it using four M8 nuts and four M8 × 20 screws. Tighten with the 13–15 mm open-end wrench from the accessory tool kit.

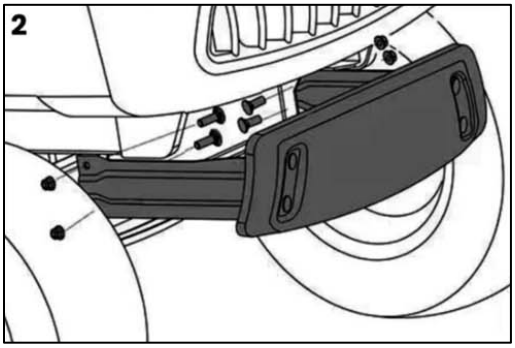

## MOUNTING THE MULCHING KIT

If you choose to mulch and leave grass clippings on the lawn, install the mulching kit on the cutting deck as follows:

**STEPS:**

1. **LIFT THE SIDE DEFLECTOR**
   Raise the side deflector to access the mounting points.

2. **POSITION PIVOT BOSS**
   Pass the pivot boss **(M)** on the mulching kit under and through the bottom of the side deflector's pivot pin **(N) (Figure 1)**.

3. **INSERT RIGHT DOWEL PIN**
   Insert the right dowel pin into the designated hole on the deck **(Figure 2, Detail C)**.

4. **INSERT LEFT DOWEL PIN**
   Insert the left dowel pin **(E)** into the middle hole on the left side of the deck.

5. **LOWER THE SIDE DEFLECTOR**
   Return the side deflector to its closed position **(Figure 3).**

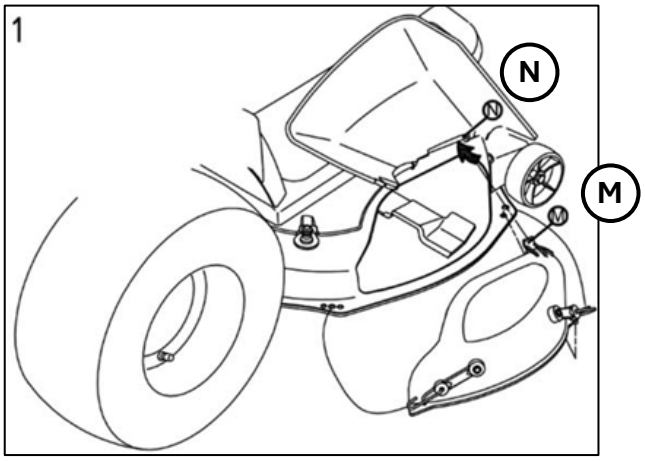


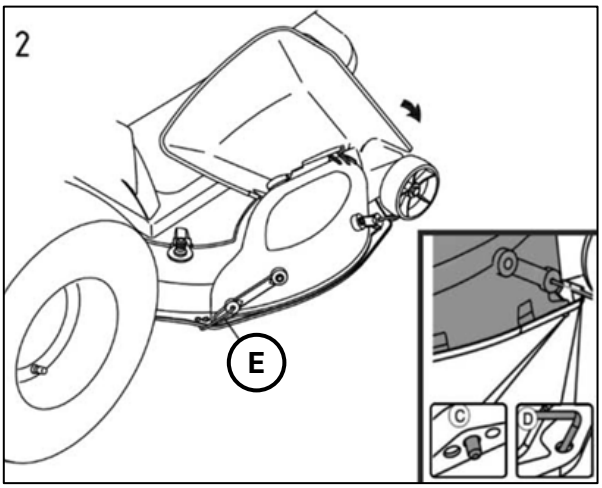


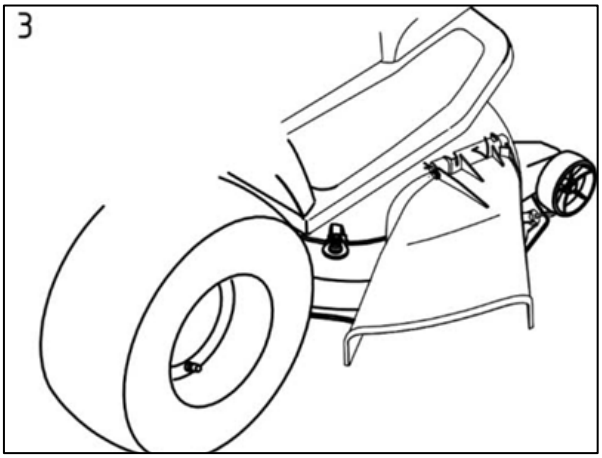

## MOUNTING THE SIDE DEFLECTOR

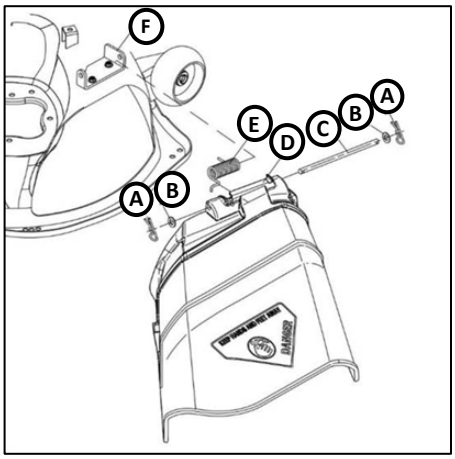


**STEPS:**

1. **INSTALL ELASTIC PIN AND WASHER**
   Insert the elastic pin **(A)** and washer **(B)** onto the right end of the pin **(C)**.
2. **INSERT PIN SHAFT THROUGH COMPONENTS**
   Slide the pin shaft **(C)** through the side deflector **(D)**, bracket **(F)**, and torsion spring **(E)** in sequence.
3. **SERCURE PIN SHAFT ASSEMBLY**
   Secure the assembly by inserting the washer **(B)** and elastic latch **(A)** on the opposite end.

⚠ **NOTE:**
When opening the side deflector, press the self-locking button first. Do not force the deflector open, as this may damage the mechanism.

## MOUNTING THE TOWING KIT

**Steps:**

1. **REMOVE EXISTING HARDWARE**
   Detach the tension arm bushing **(B)**, hexagonal flange bolts M8 × 20 **(C)**, and hexagonal flange locking nuts M8 **(A)** securing the gearbox cover **(D)**.

2. **INSTALL BUSHING AND ALIGN TOWING PLATE**
   Insert the bushing **(B)** into the two holes where the bolts were removed. Align the towing plate **(E)** with these holes.

3. **SECURE TOWING PLATE**
   Install the hexagonal flange bolts M8 × 40 **(C)** and hexagonal flange locking nuts M8 **(A)**. Tighten all bolts securely.

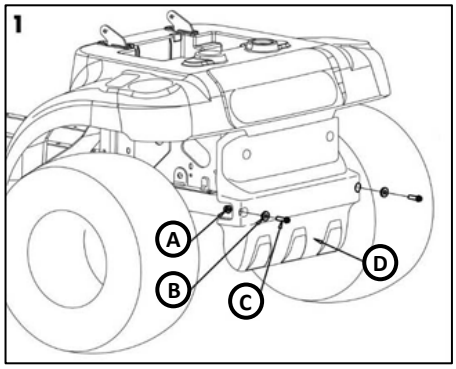


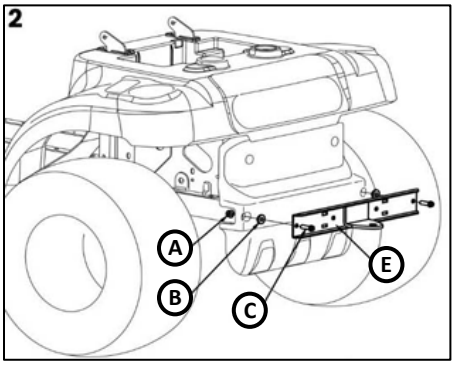

⚠ **IMPORTANT!**

**REGULATIONS FOR TOWING**

- The total weight capacity (including trailer, load, and operator) must not exceed 136 kg (300 lbs).
- The tongue weight (upward or downward force on the hitch) must not exceed 25 kg (55 lbs).
- Refer to the illustration for proper towing configuration and weight distribution.

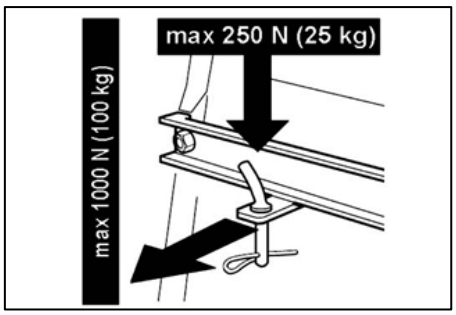


⚠ **NOTE:**

This accessory must be installed strictly following the instructions provided to ensure proper fit and safe operation.

# 7. CONTROLS AND OPERATIONS

## CHECKING THE FUEL AND OIL

**IMPORTANT:** This chapter explains only the preliminary machine control functions. For detailed control operations, refer to the following chapters.

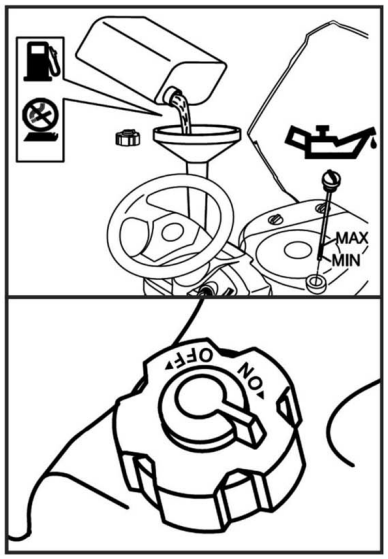


⚠ **HAZARD!**

**FUEL SAFETY**

- Refueling must be done with the engine switched off in an open, well-ventilated area.
- Gasoline fumes are highly flammable.
- Do NOT use open flames near the tank opening and do NOT smoke while refueling.

⚠ **IMPORTANT!**

**THE MACHINE IS SHIPPED WITHOUT LUBRICATING OIL IN THE ENGINE.**

⚠ **CAUTION!**

**ENGINE DAMAGE**

**FILL THE ENGINE WITH OIL BEFORE STARTING TO AVOID IRREPARABLE DAMAGE.**

⚠ **NOTE:**

Refer to the engine manual for the correct oil grade and fuel type.

### OIL CHECK AND FILLING

1. Place the machine on level ground.
2. With the engine off, check the oil level using the dipstick.
3. Use the oil grade specified in the engine manual.
4. Fill oil between the MIN and MAX marks on the dipstick.

### FUEL FILLING

1. Refuel using a funnel, but do not completely fill the tank.
2. Tank capacity: [Insert capacity in liters].
3. Before operating, open the Fuel Shut-Off Valve on the fuel cap to the ON position.

⚠ **IMPORTANT!**

Avoid spilling gasoline on plastic parts to prevent damage. If a spill occurs, rinse immediately with water.

**Warranty does not cover damage caused by gasoline to plastic components.**

⚠ **NOTE:**

Store gasoline in an approved container with a properly tightened cap.

# CONTROLS AND CONTROL INSTRUMENTS

Refer to **Identification of Main Components (see pages 13 & 14)** for the exact locations of all controls and instruments on the mower.

## REAR WHEELS (1)

Provide traction and stability for the mower. Their larger size improves grip on uneven or sloped terrain, reducing the risk of slipping and ensuring smooth, controlled operation.

## CUTTING HEIGHT ADJUSTMENT LEVER (2)

The lever has 7 positions (1–7) for cutting heights from 30 mm to 90 mm (1.18 inches to 3.43 inches). Adjust only when the machine is stopped, and blades are disengaged.

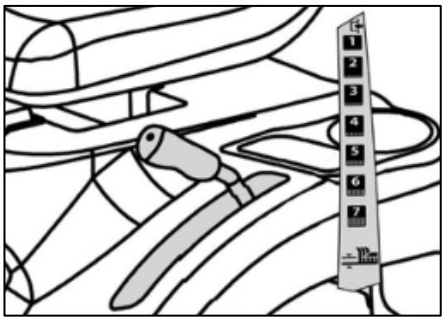


⚠ **WARNING!**

Lower settings increase the risk of scalping, especially on uneven terrain. Use higher settings for rough areas.

## STEERING WHEEL (3)

Controls the direction of the mower by directly steering the front wheels. Provides precise maneuverability for navigating around obstacles and adjusting the mower's path during operation.

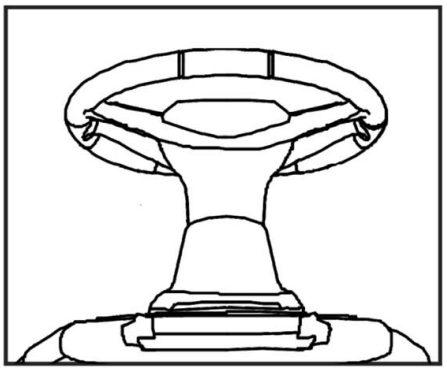

## DECK (4)

The cutting deck houses the mower blades and determines the cutting width. It is designed for durability and efficient grass discharge or mulching. Keep the deck clean and free of debris to maintain performance and prevent corrosion.

## BREAK PEDAL (5)

The brake pedal is located on the left front side of the board.

The brake pedal can be used for sudden stops or setting the parking brake.

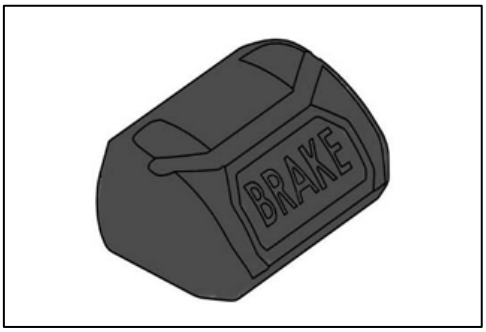


⚠ **NOTE:**

When the machine is moving, keep your foot off the brake pedal.

## FUEL CAP/ FUEL SHUT-OFF VALVE (UNDER ENGINE COVER) (6)

The fuel cap seals the tank; the shut-off valve controls fuel flow to the engine for maintenance or storage.

## ENGINE COVER (7)

Protects the engine from debris and provides access for maintenance.

## FRONT WHEELS (8)

Provide maneuverability and support for steering.

## THROTTLE LEVER (9)

The throttle lever regulates engine speed. Positions are indicated on a label with the following symbols:

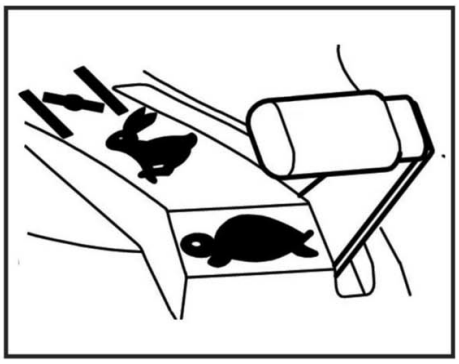

| | | |
|---|---|---|
|  | **CHOKE** | For cold starting, it enriches the fuel mixture |
|  | **SLOW** | Engine Idle or minimum speed. |
|  | **FAST** | Maximum engine speed for mowing. |

**USAGE GUIDELINES**

- Use **CHOKE** only for the time necessary when starting a cold engine.
- When moving between areas, set the lever between **SLOW** and **FAST**.
- For cutting operations, shift the lever to **FAST** for optimal performance.

## REVERSE MODE OPERATION BUTTON (RMO) (11)

The reverse mode operation knob is located on the RH console to the left of the blade start/stop knob. The blades will stop when traveling in reverse. When traveling in reverse, press the RMO button to reengage the rotation of the blades.

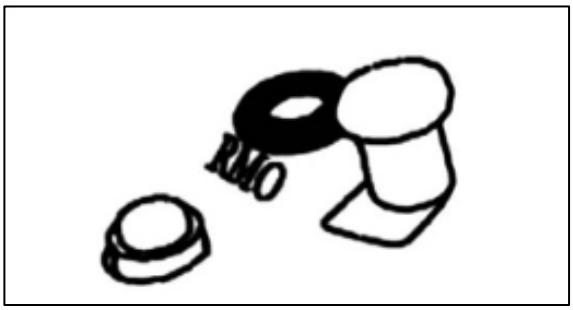


⚠ **NOTE:**
When traveling in reverse, the blades will stop.

If the blades are rotating when traveling in reverse, press the RMO button. Turning off the Blade Start/stop Knob (12) or restarting the engine will unlock the reverse mowing.

⚠ **NOTE:**
Mowing in reverse is not recommended.

## BLADE START/STOP KNOB (12)

The blade start/stop knob is located on the RH console in front of the key switch. The blade start/stop knob operates the electric clutch.
Pull the knob upward to engage the blades or push the knob downward to disengage the blades.

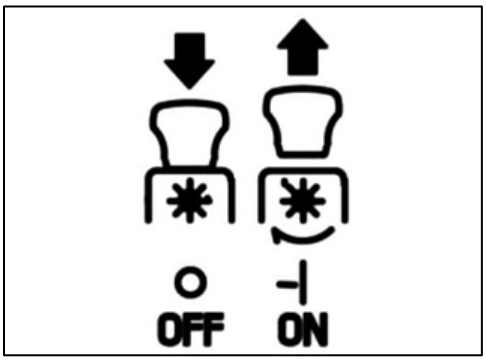


## IGNITION SWITCH (13)

This key-operated control has four positions:

**OFF** position: Everything is switched off.

**ON** position: Activates all parts except the headlight.

**START** position: Makes electrical contact and engages the starter motor. If you release the key on **START**, it will automatically return to **ON**.

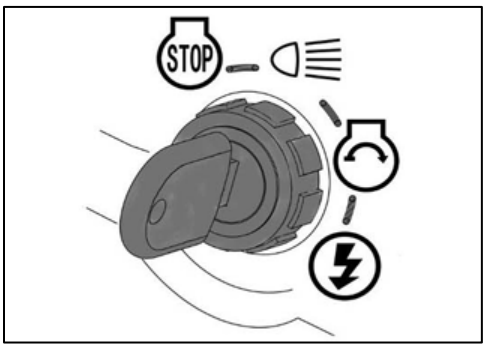


**When the key is in this position, power is sent to the headlights.**

## PARKING BRAKE LEVER (14)

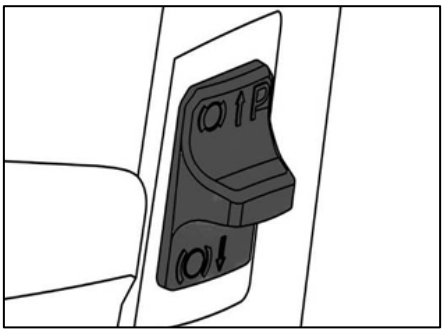


**WITH THE MACHINE STOPPED:**

- Keep the brake pedal pressed.
- Lift the parking brake lever and keep it lifted.

**RELEASE THE PEDAL:**

- This way, the rear wheels remain braked. To release the parking brake, fully press the brake pedal (the parking brake lever is automatically released and returns to its down position).

⚠ **NOTE:**

The engine can only be started in the parking position, while sitting on the machine and with either the parking brake lifted or the brake pedal pressed.

## DRIVE ENGAGEMENT (15) (FOR HYDROSTATIC TRANSMISSION)

This pedal engages the drive in the wheels as well as modulating the machine's forward and reverse speeds.

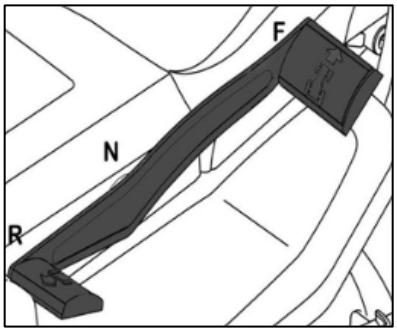


1. To engage forward drive, press it towards F with your toecap. As you increase the pressure on the pedal, the speed of the machine increases.
2. The reverse is engaged by pressing the pedal with the heel towards R.
3. The pedal automatically goes into neutral N when released.

⚠ **WARNING!**

**The reverse must only be engaged when the machine is stopped.**

Make sure the parking brake has been released before driving the mower.

## SAFETY RECOMMENDATIONS

⚠ **DANGER!**

The machine must only be used for its intended purpose—cutting grass. Do not tamper with or remove any safety devices.

**REMEMBER:** The user is always responsible for damage or injury to others.

**BEFORE USING THE MACHINE:**

1. Read all safety regulations, especially those related to driving and cutting on slopes.
2. Review the instructions for use. Know the controls and how to stop the blades and engine quickly.
3. Never place hands or feet near rotating parts or the discharge area.
4. Do not operate if unwell or under the influence of substances that impair reflexes or concentration. Assess the work area for risks, especially on slopes or unstable ground.
5. Do not leave the machine running in high grass to avoid fire hazards.
6. Always use the machine with the side deflector in place.

⚠ **WARNING!**

- Do not use the machine on lawns with gradients over 15° (27%) or side gradients above 10° (18%).
- For frequent use on slopes, install counterweights beneath the front wheel cross-member to improve stability and reduce tipping risk.

⚠ **IMPORTANT!**

All control positions are described in **CONTROLS AND INSTRUMENTS.**

## SAFETY DEVICES

**THE SAFETY DEVICES WORK IN TWO WAYS:**

1. Prevents engine start if safety conditions are not met.
2. Stops the engine if conditions change during operation.

**TO START THE ENGINE:**

- Blades disengaged.
- Parking brake engaged, transmission disengaged.
- Operator seated.

**ENGINE STOPS WHEN:**

- Operator leaves the seat while mowing or driving.

## DIRECTIONS BEFORE STARTING WORK

Before mowing, perform these checks to ensure efficiency and safety.

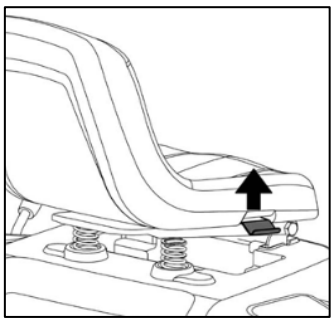

## SEAT ADJUSTMENT

Lift the adjustment lever, slide the seat forward or backward to the desired position, then release the lever.

⚠ **NOTE:**
Ensure the seat is locked before operating.

## TIRE PRESSURE

Correct tire pressure keeps the cutting deck level for an even cut.

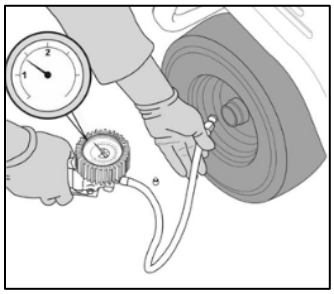

**TIRE PRESSURES:**

- **FRONT:** 1.2 bar/ 17.4 PSI (15 x 6.0-6)
- **REAR:** 1.0 bar/ 14.5 PSI (18 x 8.5-8)

Remove valve caps and use a gauge to check pressure.

## CHECKING MACHINE SAFETY AND EFFICIENCY

1. Verify that all safety devices function correctly.
2. Ensure the brake works perfectly.
3. Do not start mowing if blades vibrate or seem dull.

**Remember**

- A poorly sharpened blade tears grass and causes yellowing.
- A loose blade creates dangerous vibrations.

⚠ **WARNING!**
Do not use the machine if you are unsure about its safety or efficiency. Contact **PRORUN Customer Service** or an authorized service provider immediately for checks and repairs.

## HYDROSTATIC TRANSMISSION DISENGAGEMENT LEVER

**THIS LEVER HAS TWO POSITIONS:**

**A. Transmission engaged:**
For all normal operations, including moving and cutting.

**B. Transmission disengaged:**
Allows the machine to be moved by hand with the engine off, making manual handling easier.

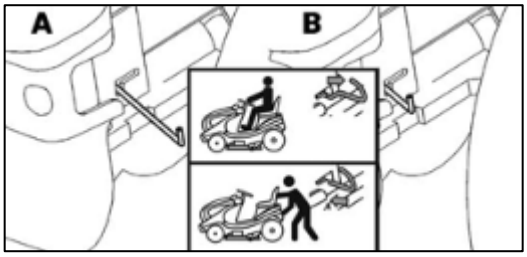

## OPERATIONS STARTING

⚠ **DANGER!**

Exhaust gases are toxic! Start the engine only in an open or well-ventilated area.

⚠ **IMPORTANT!**

Open the choke as soon as the engine runs smoothly. Using the choke on a warm engine can foul spark plugs and cause erratic running.

⚠ **NOTE:**

If the engine does not start, do not persist—this can drain the battery and flood the engine. Turn the key to OFF, wait a few seconds, then try again. If the problem continues, refer to the engine manual.

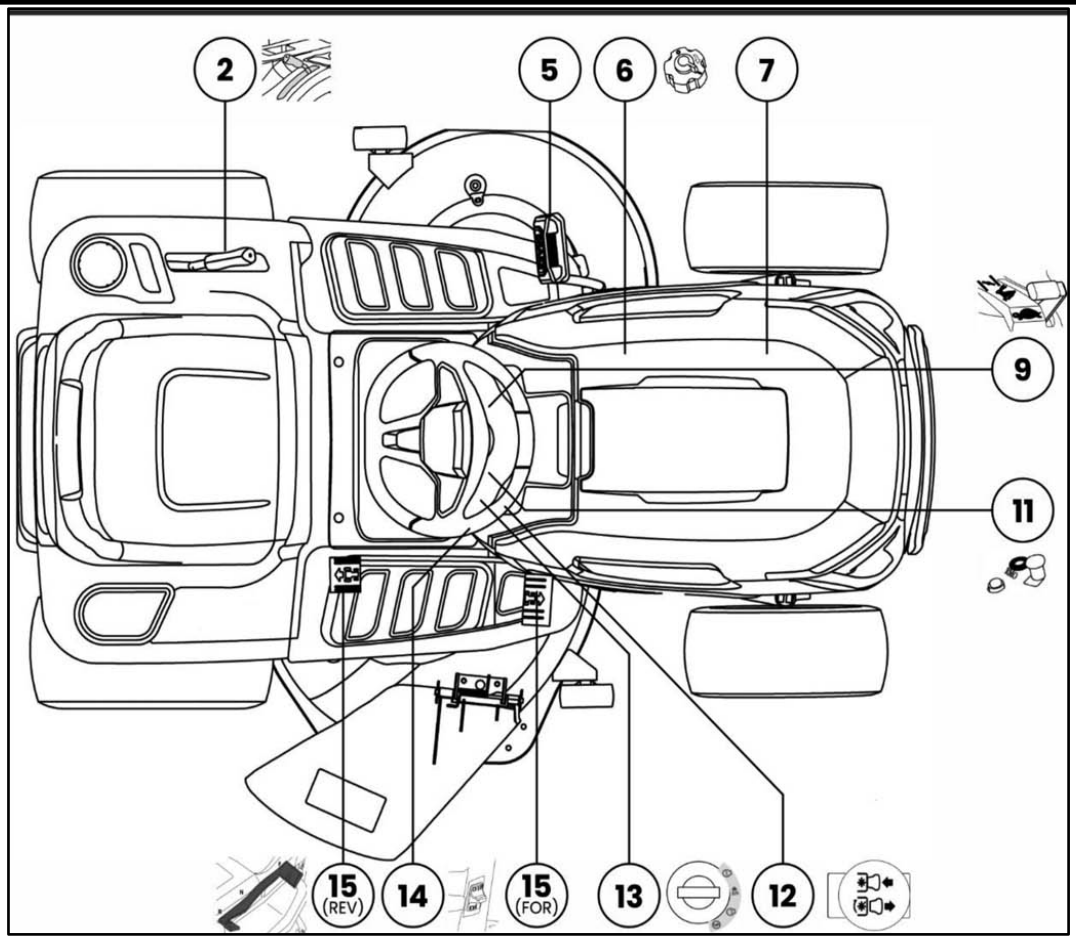


⚠ **IMPORTANT!**

Safety devices prevent the engine from starting if requirements are not met. After correcting the issue, turn the key to OFF before restarting.

## TO START THE ENGINE:

1. Open the **Fuel Shut-Off Valve** on the fuel cap (6) to **ON**.
2. Close the **Engine Cover** (7).
3. Raise the cutting deck using the **Height Adjustment Lever** (2).
4. Disengage the blades with the **Blade Start/Stop Knob** (12).
5. Shift **Drive Engagement** (15) to **Neutral** (N).
6. Depress the **Brake Pedal** (5) and engage the **Park Brake Lever** (14).
7. For cold start: move **Throttle Lever** (9) to **CHOKE.**
8. For warm start: set **Throttle Lever** (9) between **SLOW** and **FAST.**
9. Insert **Ignition Key** (13), turn to **ON**, then to **START.**
10. Release the key once the engine starts.
11. After starting, move the **Throttle Lever** (9) to **SLOW**.

## TRANSPORTING WITHOUT MOWING

⚠ **WARNING!**

This machine is not approved for public roads. Use only in private areas closed to traffic.
When moving the machine:

1. Disengage blades using Blade Start/Stop Knob (12).
2. Raise the cutting deck to position 7 with Height Adjustment Lever (2).
3. Set Throttle Lever (9) between SLOW and FAST.
4. Release the parking brake gradually and press the Drive Pedal forward (F) to move.
5. Increase speed gradually using the throttle.

⚠ **WARNING!**

Release the brake pedal slowly—sudden release may cause tipping or loss of control.

**BRAKING**

1. Reduce speed with Throttle Lever (9).
2. Press Brake Pedal (5) until the machine stops.

**REVERSE**

⚠ **IMPORTANT!**

Engage reverse only when the machine is completely stopped.

1. Press Brake Pedal (5) until fully stopped.
2. Shift Drive Engagement (15) to R for revers

## GRASS CUTTING

**TO START CUTTING:**

1. Move Throttle Lever (9) to FAST.
2. Raise the cutting deck to position 7 using Height Adjustment Lever (2).
3. Engage blades with Blade Start/Stop Knob (12).
4. Begin moving forward slowly using Drive Engagement (15).
5. Adjust cutting height and speed based on grass conditions (height, density, dampness).

⚠ **WARNING!**

- Reduce speed on slopes for safety.
- Slow down if engine speed drops.
- Disengage blades and raise deck when crossing obstacles.

⚠ **IMPORTANT!**

- Mowing in reverse is not approved.
- Blades stop automatically when reverse is engaged.

## OPERATING TIMES

Check local regulations for permitted mowing times.

## END OF MOWING

**WHEN YOU HAVE FINISHED MOWING:**

1. Disengage blades.

2. Lower engine speed with Throttle Lever (9).
3. Raise the cutting deck to position 7.
4. Drive to storage location.

## END OF WORK

1. Stop the machine completely.
2. Move Throttle Lever (9) to SLOW, then turn Ignition Key (13) to OFF.
3. Engage Park Brake Lever (14).
4. Close Fuel Shut-Off Valve (6).
5. Remove Ignition Key (13).

⚠ **WARNING!**

- To avoid backfire, keep the throttle at SLOW for 20 seconds before stopping.
- Always remove the key before leaving the machine. Do not leave the key in the ON position when the engine is off.

## CLEANING THE MACHINE

1. Clean the exterior, discharge chute, and remove debris.
2. Wipe plastic parts with a damp sponge and mild detergent. Avoid wetting the engine or electrical components.

⚠ **IMPORTANT!**

- Never use high-pressure hoses or harsh detergents.
- For deck cleaning:
  - Machine on firm ground.
  - Discharge chute fitted, operator seated, engine running, transmission in Neutral (N), blades engaged.
  - Connect the water hose to deck fittings one at a time for a few minutes with the blades moving.
  - Keep the deck in the lowest position during washing.

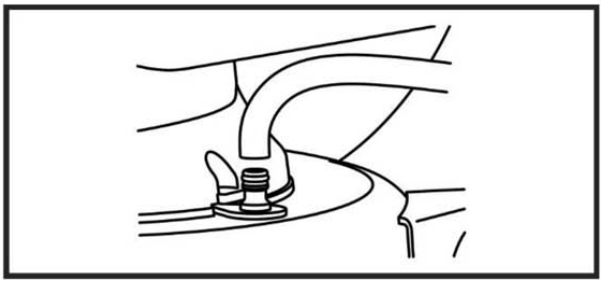

## PERIODS (Long-Term Storage)

1. If storing for more than 1 month, disconnect battery cables and follow engine manual instructions.
2. Empty the fuel tank by disconnecting the tube at the fuel filter inlet (see engine manual).

⚠ **WARNING!**

Remove dry grass around the engine or silencer to prevent fire risk. Store the machine in a dry, sheltered place, preferably covered.

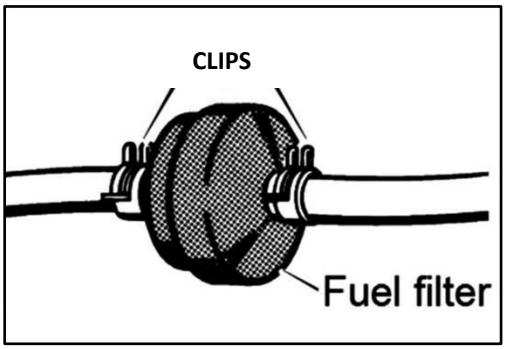


⚠ **IMPORTANT!**

- Keep the battery in a cool, dry place. Charge before storage and recharge before use.
- Before restarting, check for fuel leaks from tubes, the shut-off valve, or the carburetor.
- Blades are a sharp risk of serious injury! Before inspection or cleaning:
  - Stop the engine and remove the ignition key.
  - Disconnect the spark plug wire and keep the cap away from the plug to prevent accidental start.

## SUMMARY OF MAIN STEPS TO FOLLOW WHEN USING THE MACHINE

| To... | You must... |
|---|---|
| Start the engine | Open fuel shut-off valve, check safety conditions, and turn key. |
| Go forward | Press the brake, engage the gear, and release the brake gradually. |
| Brake or stop | Reduce engine speed, press the brake pedal. |
| Reverse | Stop completely, shift to neutral, press the brake, engage reverse, and release the brake slowly. |
| Cut the grass | Fit discharge chute, set throttle to FAST, engage blades, adjust cutting height, press brake, engage gear, and release brake gradually. |
| Finish mowing | Disengage blades, reduce engine speed. |
| Stop the engine | Reduce speed, wait a few seconds, turn the key OFF, and close the fuel shut-off valve. |
| Store the machine | Engage the parking brake, remove the key, clean the machine and cutting deck if needed. |

## USING ON SLOPING GROUND

⚠ **WARNING!**

Do not use the machine on slopes with longitudinal gradients over 15° (27%).

⚠ **DANGER!**

**RISK OF OVERTURNING ON STEEP GRADIENTS**

- Only mow slopes up to the maximum allowed.
- Always mow up and down, never across.
- When changing direction, avoid obstacles that could cause sliding or tipping.

⚠ **DANGER!**

**REDUCE SPEED BEFORE TURNING ON SLOPES!**

Engage the Park Brake Lever (14) before leaving the machine unattended.

⚠ **WARNING!**

Start moving forward slowly on slopes. Reduce speed before going downhill.

⚠ **DANGER!**

- Never use reverse to slow down on slopes—risk of losing control.
- Never ride in neutral gear or with the clutch out on slopes.
- Always engage the low gear before leaving the machine stopped.

**USE THIS SLOPE GAUGE TO DETERMINE IF A SLOPE IS TOO STEEP FOR SAFE OPERATION!**

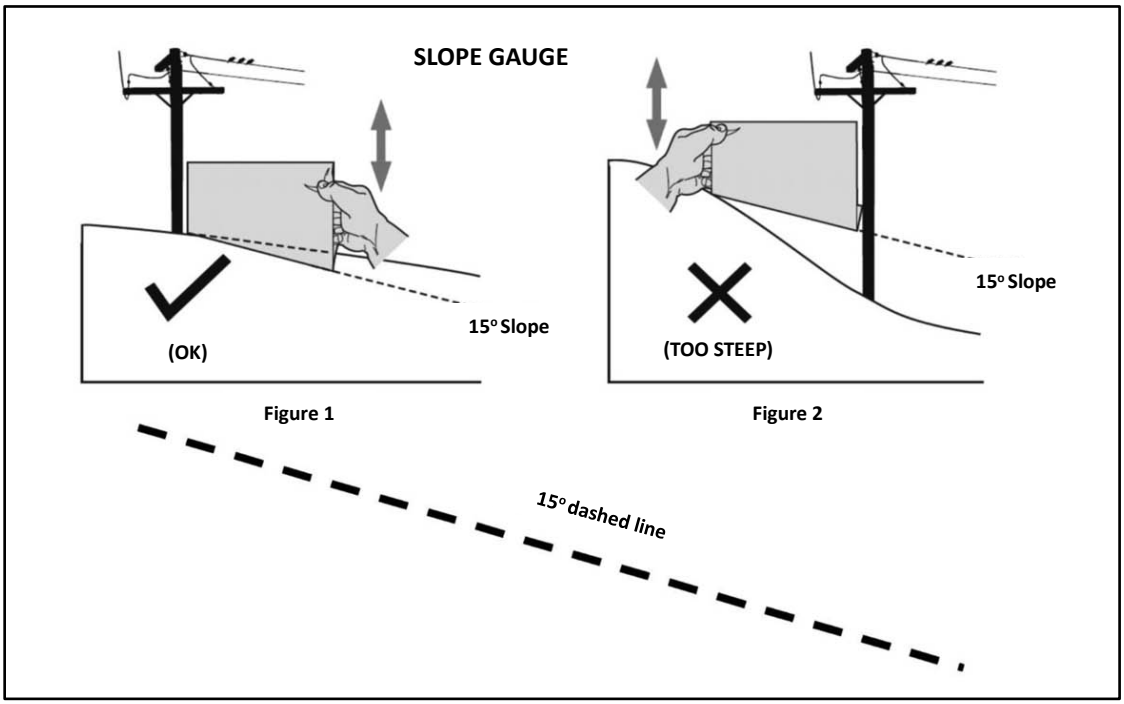


Figure 1

Figure 2

**CHECKING THE SLOPE**

1. Remove this page and fold along the dashed line.
2. Find a vertical object (pole, building, tree, etc.) on or behind the slope.
3. Align the slope gauge with the object.
4. Adjust until the left corner touches the slope.

If there is a gap below the gauge, the slope is too steep for safe operation.

⚠ **WARNING!**

Slopes are a major factor in tip-over accidents, which can cause injury or death.

Do not operate on slopes over 15° (27%). All slopes require extra caution.

## LAWN MAINTENANCE

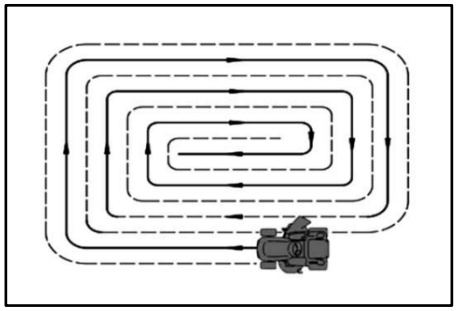

1. Cut regularly to keep the lawn green and healthy. Frequent mowing encourages strong grass growth and prevents weeds.
2. Always mow when the grass is dry.
3. Keep blades sharp for a clean cut—dull blades tear grass and cause yellowing.
4. Run the engine at full speed for proper cutting and discharge.
5. Adjust mowing frequency based on grass growth; avoid letting grass grow too tall.
6. During hot, dry periods, cut grass slightly higher to retain soil moisture.
7. Ideal lawn height: 4–5 cm (1.6-2.0 inches). Remove no more than one-third of the grass height per cut. For very tall grass, mow twice: first at max height, then at the desired height.
8. When mowing large areas, start turning right, then alternate directions for a better finish.
9. Alternate cutting directions to improve lawn appearance.
10. If the collector clogs, reduce forward speed. Persistent clogging may indicate dull or damaged blades.
11. Be cautious near curbs or bushes to avoid deck misalignment and blade damage.

# 8. MAINTENANCE

⚠ **WARNING!**

- Before cleaning or maintenance, remove the ignition key and read the instructions.
- Wear proper clothing and gloves when your hands are at risk.

⚠ **WARNING!**

- Never use the machine with worn or damaged parts. Replace faulty parts—do not repair.
- Use only original spare parts; inferior parts can damage the machine and compromise safety.

⚠ **IMPORTANT!**

Never dispose of used oil, fuel, batteries, or other pollutants in unauthorized places.

## Maintenance Table

| Operation | Hours | Completed (Date or Time) | | | | | | | |
|---|---|---|---|---|---|---|---|---|---|
| **1. MACHINE (Continued)** | | | | | | | | | |
| **1.1 Check transmission belt** | Each 25 hours | | | | | | | | |
| **1.2 Check the blade belt** | Each 25 hours | | | | | | | | |
| **1.3 Bolt and screw check** | Every 25 hours | | | | | | | | |
| **1.4 General Lubrication (3)** | Each 25 hours | | | | | | | | |
| **1.5 Blade replacement** | Each 100 hours | | | | | | | | |
| **1.6 Maintenance review (made by Authorized Dealer or Service Center)** | Every year | | | | | | | | |
| **2. ENGINE** | | | | | | | | | |
| **2.1 First Oil Change** | Each 20 hours | | | | | | | | |
| **2.2 Engine oil change** | Each 50 hours | | | | | | | | |
| **2.3 Air filter cleaning** | Each 50 hours | | | | | | | | |
| **2.4 Check and adjust Spark Plug** | Each 100 hours | | | | | | | | |
| **2.5 Fuel tank and fuel filters cleaning** | Each 100 hours | | | | | | | | |
| **2.6 Air filter replacement** | Every year | | | | | | | | |
| **2.7 Spark plug replacement** | Every year | | | | | | | | |

Use the chart provided to track maintenance tasks and their frequency. Record the date or operating hours after each service.

⚠ **WARNING!**

Any checks, adjustments, or replacements not described in this manual must be performed by an Authorized Dealer or Service Center. They have the tools and expertise to ensure safety.

## ENGINE

⚠ **IMPORTANT!**

Follow all instructions in the engine manual.

**To drain oil:** unscrew the oil plug and refit it with the seal correctly positioned.

## BATTERY

**MAINTAIN THE BATTERY FOR LONG LIFE:**

- Charge before first use, before long storage, and before restarting after inactivity.
- Read and follow the battery manual carefully.
- Recharge flat batteries immediately using a constant-voltage charger only. Other methods can damage the battery.

## CUTTING DECK CHECKS AND ADJUSTMENTS

For best cutting results, the **front of the deck should be 5–6 mm lower than the rear.**

**STEPS:**

1. Place the machine on a flat surface and check tire pressure.
2. Put 30 mm blocks under the front edge and 35 mm blocks under the rear edge; set Height Lever (2) to position 2.
3. Adjust front and rear rods so the deck touches the blocks.
4. Adjust the lift rod for proper alignment.

For lower cuts on flat lawns, adjust the deck wheel position. For heavy lawns, set wheels in hole **A**.

⚠ **IMPORTANT!**

Contact **PRORUN Customer Service** for assistance if needed.

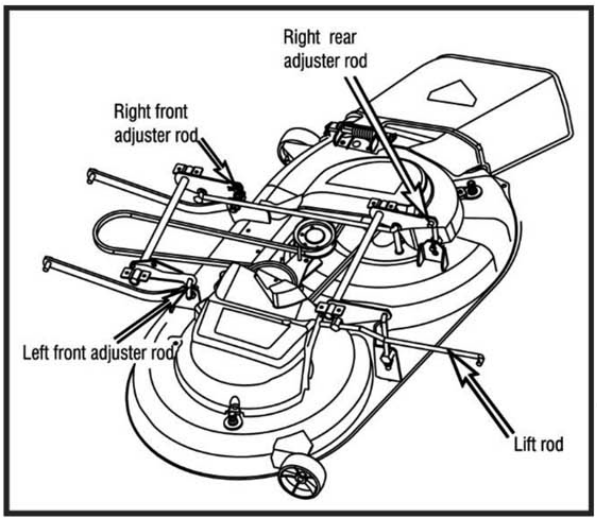


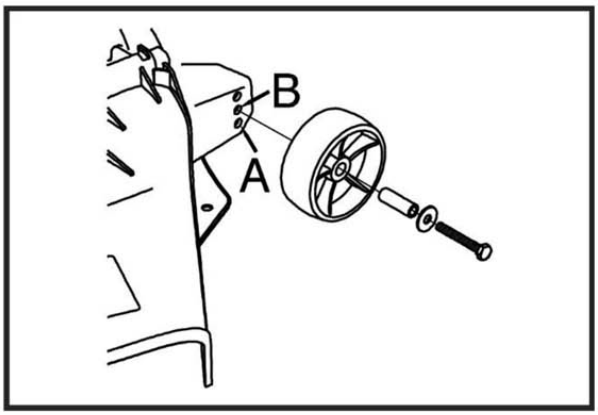


## REPLACING WHEELS

1. Stop the machine on flat ground and block the frame on the side of the wheel to be changed.

2. Remove the snap ring with a screwdriver.

⚠ **NOTE:**
Replace both rear wheels if needed; ensure the same diameter and deck remains level.
**BEFORE REMOUNTING:**

- Apply grease to the axle.
- Refit the snap ring and washer securely.

## REPLACING AND REPAIRING THE TIRES

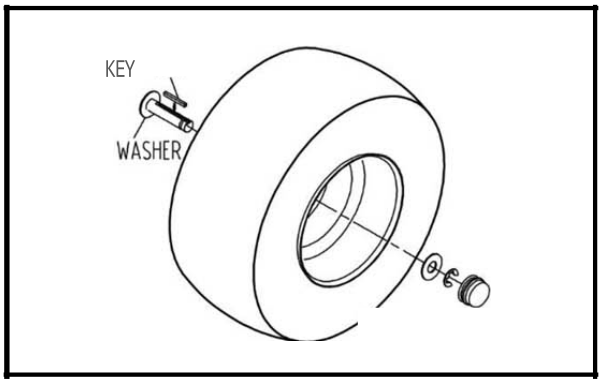


The tires on this equipment are tubeless. All punctures must be repaired by a qualified tire repair technician using the correct procedures for tubeless tires. Improper repair can lead to air leakage, tire failure, or unsafe operation.

**IMPORTANT GUIDELINES**

- Do not attempt temporary fixes such as inner tubes or unauthorized sealants.
- Always inspect the tire thoroughly before repair to confirm it is suitable for continued use.
- Follow manufacturer specifications for repair limits and safety standards.

## REPLACING A FUSE

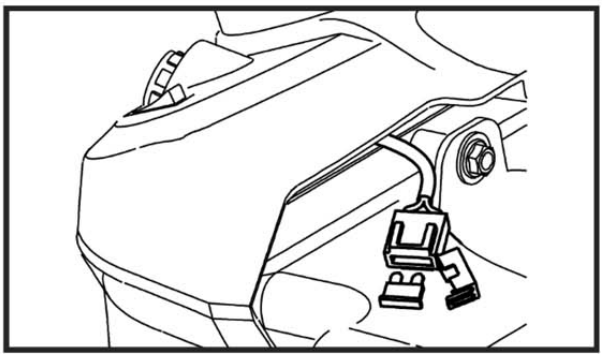

The machine is equipped with 20A fuses. When a fuse blows:

- The machine will stop.
- The dashboard light will switch off.
- The battery will gradually discharge.
- The machine may have difficulty starting.

**Procedure:**

1. Remove the blown fuse.
2. Replace it with an identical fuse rated at 20A.

⚠ **IMPORTANT!**
A blown fuse must always be replaced with an identical fuse of the same amperage.
Never use a fuse with a different rating.

## DISMANTLING, REPLACING, AND REMOUNTING THE BLADES

⚠ **WARNING!**

- Always wear work gloves when handling blades.
- Before inspecting or removing a blade, stop the engine and disconnect the spark plug wire.
- Damaged or bent blades must always be replaced—never attempt to repair them.

**ALWAYS USE ORIGINAL BLADES BEARING THE SYMBOL "ZHONG JIAN"!**

- Ensure blades are correctly balanced.
- Reinstall blades in the correct position by referring to the code and rotation direction stamped on each blade.
- For blade models, refer to the "**SPECIFICATIONS**" section.

### DISMANTLING

1. Loosen the screw counterclockwise.

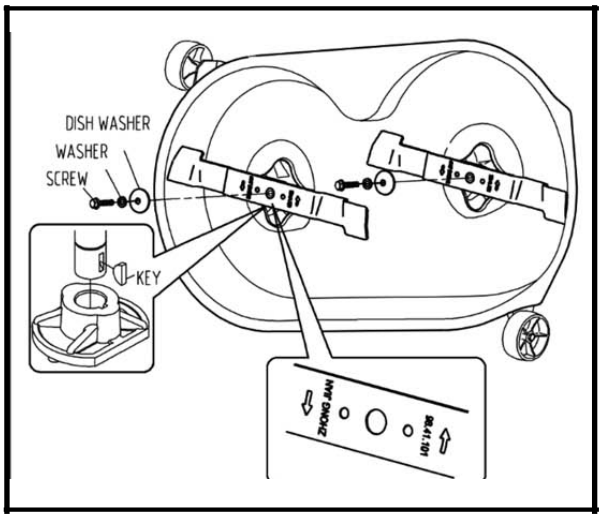


### REMOUNTING

1. Ensure the printed code on the blade faces the operator during installation.
2. Check that the concave part of the disc washer presses against the blade.
3. Remount the shaft hubs, ensuring the keys are securely lodged in place.

### TIGHTENING THE SCREWS

1. Tightening clockwise using a torque wrench calibrated to 40-45 N.m.

### REPLACING THE BELT

Belt replacement must be performed at a **Licensed Service Center**. Replace belts as soon as they show obvious signs of wear.

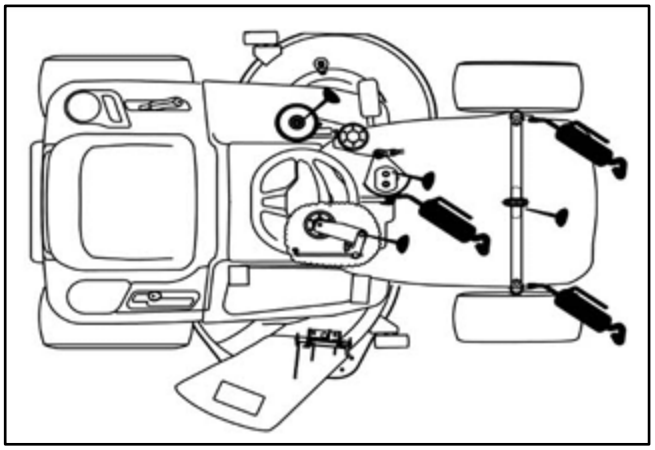

⚠ **WARNING!**

Always use genuine replacement belts.

### LUBRICATION

1. Apply grease with an injector to the designated areas. Use two or three shots of grease and wipe off excess.

2. Lubricate specified areas with engine oil. Clean the area, apply a few drops of oil, and wipe up any drips or spills.

⚠ **IMPORTANT!**

Do not contaminate the belt, brake shoe, or tires with grease or oil. These substances will damage the components.

# 9. TROUBLESHOOTING

⚠ **DANGER!**

**INJURY HAZARD**

If the engine is started inadvertently, serious injury can occur. Protect yourself against injury.

**BEFORE PERFORMING ANY WORK ON THIS MOWER:**

1. Switch off the engine.
2. Remove the ignition key.
3. Engage the parking brake.
4. Wait until all moving parts have completely stopped and the engine has fully cooled.
5. Disconnect the spark plug wire to prevent accidental engine start.

**TROUBLESHOOTING**

Faults that occur during mower operation often have simple causes that you may be able to correct yourself.

If you are uncertain or unable to resolve the issue, contact your dealer or authorized service center for assistance.

| Problem | Cause(s) | Remedy |
|---|---|---|
| Lighting does not function. | 1. The headlight wire connector is not connected. | Turn the ignition key to the «STOP» position and connect the headlight wire. |
| | 2. Bulbs defective. | Turn the ignition key to the «STOP» position and replace the bulbs. |
| | 3. Battery not connected correctly. | Connect the red cable to the (+) battery terminal and the black cable to the (-) battery terminal. (par. 3.4) |
| | 4. Ignition switch defective | Replace the ignition switch. |
| | 5. Battery defective. | Test and recharge or replace the battery. |
| | 6. Short-Circuit in the wire harness. | Contact PRORUN Customer Service or your Dealer or Service center. |

| Problem | Cause(s) | Remedy |
|---|---|---|
| The starter motor will not turn the engine. | 1. Starting conditions have not been met. | Check that all starting conditions are met (par. 5.4.1). |
| | 2. No fuel in the fuel tank. | Turn the ignition key to the «STOP» position and refuel the fuel tank (par. 5.3.3). |
| | 3. Poor contact between the cable and the battery pole. | Check the connections. (par. 3.4). |
| | 4. Battery flat or defective. | Test and recharge or replace the battery. |
| | 5. Fuse defective. | Replace the fuse. If the fuse blows repeatedly, determine the cause (usually a short-circuit). (par. 6.4.3). |
| | 6. Clogged air filter | Clean air filter. |
| | 7. Spark Plug defective. | Check the connection of the spark plug socket. Clean or replace the spark plug. |
| | 8. Brake pedal defective. | Contact PRORUN Customer Service or your service center. |
| | 9. Start relay defective. | Replace the start relay. |
| | 10. The ignition switch start defective. | Replace the ignition switch. |

| Problem | Cause(s) | Remedy |
|---|---|---|
| The engine runs unevenly | 1. Carburetor problem. | Contact your Dealer or Service center. |
| | 2. Air filter blocked. | Clean or replace the air filter. (See engine manual). |
| | 3. Fuel tank ventilation blocked. | l. Check and replace the fuel filter if necessary;(see engine manual or contact PRORUN Customer Service or an authorized Service center). |
| | | 2. Empty the fuel tank and refuel with fresh fuel. |
| | 4. Grass is too high. | Reduce the travelling speed according to the height of the grass and/or raise the cutting height. |
| The engine feels weak | 1. Air filter blocked. | Clean or replace the air filter. (See engine manual). |
| | 2. Engine speed too low | Increase throttle. |
| | 3. Travelling speed too high. | Set to a lower travelling speed. |
| | 4. Spark Plug defective. | Replace the spark plug. (See engine manual). |
| | 5. Fuel tank ventilation blocked. | 1. Check and replace the fuel filter if necessary; (see engine manual or contact PRORUN Customer Service or an authorized Service center). |
| | | 2. Empty the fuel tank and refuel with fresh fuel. |

| Problem | Cause(s) | Remedy |
|---|---|---|
| The battery does not charge | 1. Fuse defective. | Replace the fuse. If the fuse blows repeatedly, determine the cause (usually a short-circuit). |
| | 2. Poor contact between battery poles and cables. | Check the connections. |
| The machine does not move | 1. Brake is engaged. | Keep the brake pedal pressed down and release the parking brake. Release the brake pedal slowly to start the forward movement of the machine. |
| | 2. Gearbox disengaged (Hydrostatic Gear). | Engage the gearbox. |
| | 3. Drive belt detached. | Fit the belt in place. |
| | 4. Drive belt defective or worn. | Replace the drive belt. |
| Strong vibrations | 1. Blades loose. | Check and tighten all the blades (see Torque tightening par. 6.4.4) or contact PRORUN Customer Service or Service center. |
| | 2. Engine loose. | Check and tighten all the engine and frame bolts. |
| | 3. One or both blades are imbalanced, resulting from damage. | Contact PRORUN Customer Service or Service Center. |
| | 4. Cutting-means assembly is full of grass. | Clean the cutting-means assembly. |
| | 5. Engine mounting not securely tightened. | Tighten engine mounting or contact PRORUN Customer Service or Service center. |
| | 6. Belt damaged. | Replace the belt. |

| Problem | Cause(s) | Remedy |
|---|---|---|
| Uneven or poor cutting results | 1. Blades are blunt or worn. | Sharpen or replace mowing blades |
| | 2. Different air pressures in tires on the left and right sides. | Check the tire pressure (par. 5.3.2). |
| | 3. Cutting deck adjustment. | Check deck adjustment (6.3 or Contact PRORUN Customer Service or Service center). |
| | 4. Long and/or wet grass. | Adapt the cutting level and driving speed to the mowing conditions. |
| | 5. Travelling speed too high. | Set to a lower travelling speed. |
| | 6. Grass stuck under the cutting deck. | Cleaning inside the deck properly (Use a suitable accessory to access the cleaning of the cutting deck). |
| | 7. Cutting the drive belt. Slipping. | Replace the cutting drive belt. |

If problems persist after having performed the above operations, contact PRORUN Customer Service or an authorized Service center.

## MACHINE DIMENSIONS

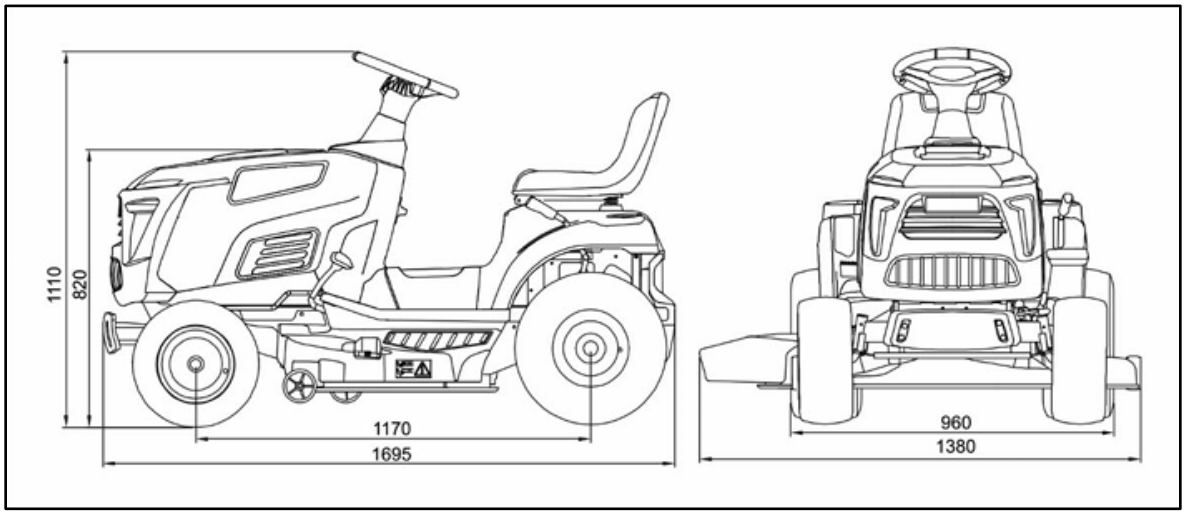


| Description | Millimeters | Centimeters | Inches |
|---|---|---|---|
| Overall Length | 1695 mm | 169.5 cm | 66.7 in |
| Wheelbase | 1170 mm | 117.0 cm | 46.1 in |
| Overall, Height | 1110 mm | 110.0 cm | 43.7 in |
| Seat Height | 820 mm | 82.0 cm | 32.3 in |
| Overall width | 1380mm | 138.0 cm | 54.3 in |
| Front Width | 960 mm | 96.9 cm | 37.8 in |

# 10. EXPLODED VIEWS AND PART

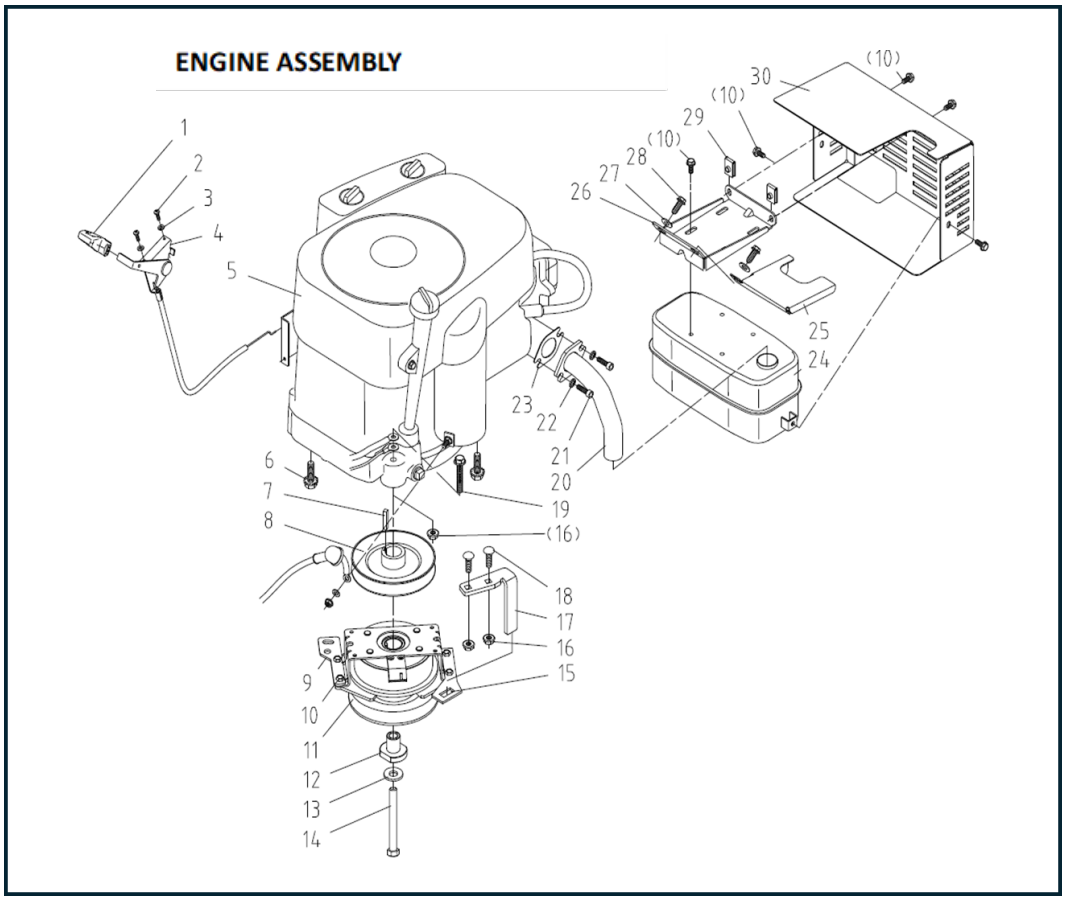


| NO | PART NAME | QTY | PART # |
|---|---|---|---|
| 1 | CHOKE KNOB | 1 | 20084362 |
| 2 | SCREW M4x16 | 2 | 20051803 |
| 3 | WASHER 4 | 2 | 20061531 |
| 4 | THROTTLE CABLE | 1 | 20071241 |
| 5 | ENGINE | 1 | 20085172 |
| 6 | TAPPING SCREW 3/8”-16-1 ¼” | 3 | 20061285 |
| 7 | FLAT KEY 6.35x30 | 1 | 20070519 |
| 8 | ENGINE PULLEY WELDMENT | 1 | 20071187 |
| 9 | STAND PLATE | 1 | 20088530 |
| 10 | TAPPING SCREW M6x16 | 12 | 20082800 |
| 11 | ELECTRIC CLUTCH | 1 | 20093233 |
| 12 | CLUTCH STEP BUSHING | 1 | 20085758 |
| 13 | DISC WASHER 12 | 1 | 20085758 |
| 14 | BOLT 7/16”-20-4” | 1 | 20093810 |
| 15 | CLUTCH CLAMP PLATE | 1 | 20085121 |

| | | | |
|---|---|---|---|
| 16 | FLANGE LOCK NUT M8 | 3 | 20061348 |
| 17 | CLUTCH BAFFLE | 1 | 20093071 |
| 18 | BOLT M8x20 | 2 | 20061299 |
| 19 | FLANGE BOLT M8x40 | 1 | 20061254 |
| 20 | EXHAUST PIPE | 1 | 20085204 |
| 21 | SCREW 5/16”-18-3/4” | 2 | 20060850 |
| 22 | SPRING WASHER 5/16” | 2 | 20061453 |
| 23 | GASKET | 1 | 20070868 |
| 24 | MUFFLER | 1 | 20071214 |
| 25 | SINGLE-CYLINDER HEAT SHIELD (REAR) | 1 | 20095299 |
| 26 | BRACKET | 1 | 20084296 |
| 27 | BIG WASHER 8 | 2 | 20061541 |
| 28 | HEX FLANGE FACE BOLT 5/16-18TX3/4 | 2 | 20082799 |
| 29 | BUCKLE NUT M6 | 2 | 20070630 |
| 30 | SINGLE-CYLINDER HEAT SHIELD (FRONT) | 1 | 20095300 |

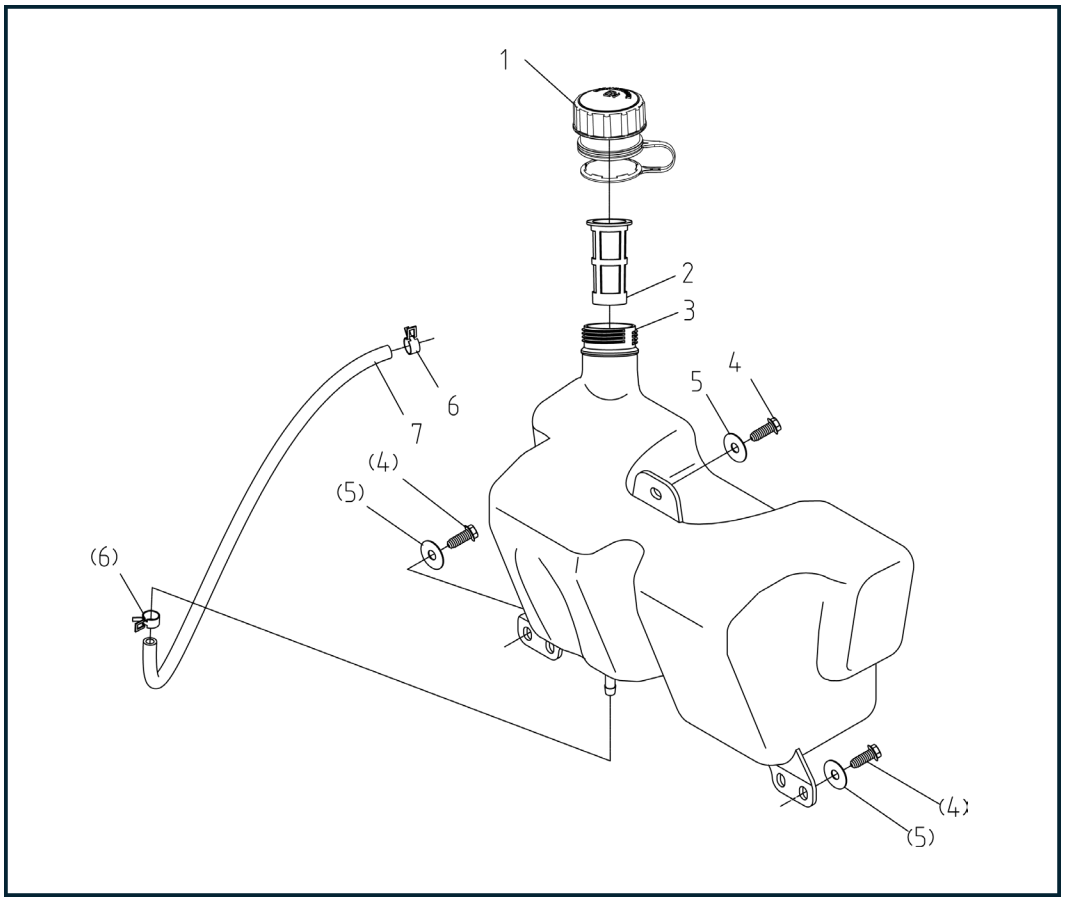

| NO | PART NAME | QTY | PART # |
|---|---|---|---|
| 1 | FUEL TANK CAP ASSEMBLY | 1 | 20098708 |
| 2 | FUEL TANK OIL INLET FILTER SCREEN | 1 | 20059766 |
| 3 | FUEL TANK | 1 | 20091738 |
| 4 | LOCKING SCREW 6x16 | 3 | 20082800 |
| 5 | FUEL TANK CAP GASKET 6x25x1.5 | 3 | 20071676 |
| 6 | PLATE CLAMP ϕ10 | 2 | 20062744 |
| 7 | OIL PIPE ϕ6×10 | 1 | 20070865 |

**DRIVE ASSEMBLY**

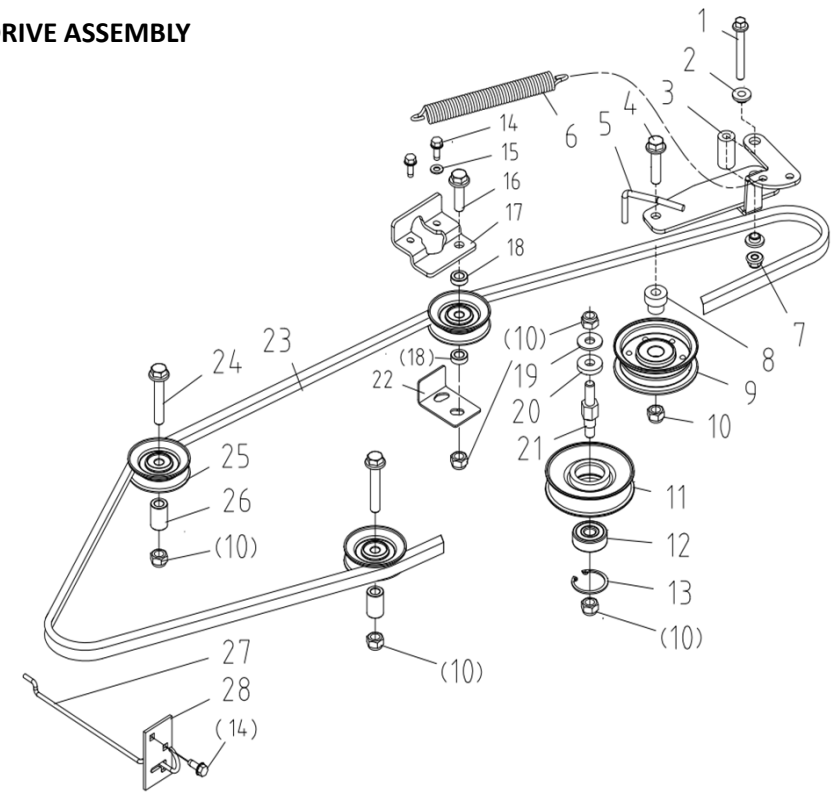


| NO | PART NAME | QTY | PART # |
|---|---|---|---|
| 1 | FUEL TANK CAP ASSEMBLY | 1 | 20098708 |
| 2 | BUSHING | 2 | 20070780 |
| 3 | SPACER ¢8x¢18x33 | 1 | 20084436 |
| 4 | FLANGE BOLT M10x1.25x40 | 1 | 20062521 |
| 5 | DRIVING TENSION ARM WELDMENT | 1 | 20090612 |
| 6 | SPRING | 1 | 20070875 |

| | | | |
|---|---|---|---|
| 7 | FLANGE NUT M8 | 1 | 20061336 |
| 8 | TENSION PULLEY BUSHING | 1 | 20071180 |
| 9 | TENSION PULLEY | 1 | 20099153 |
| 10 | LOCK NUT M10x1.25 | 6 | 20061403 |
| 12 | BEARING 6301-2RS | 1 | 20092588 |
| 13 | SNAP RING 37 | 1 | 20061549 |
| 14 | TAPPING SCREW M6x16 | 4 | 20082800 |
| 15 | WASHER 6 | 1 | 20061482 |
| 16 | FLANGE BOLT M10x1.25x45 | 1 | 20061321 |
| 17 | GUIDE PULLEY BASE PLATE | 1 | 20088482 |
| 18 | WASHER ¢10x¢18x7 | 2 | 20088483 |
| 19 | BIG WASHER 10 | 1 | 20061542 |
| 20 | WASHER ¢27x¢10.5x5 | 1 | 20062499 |
| 21 | TENSIONING WHEEL BOLT | 1 | 20084441 |
| 22 | GUIDE WHEEL BAFFLE | 1 | 20097685 |
| 23 | V BELT LG4-1050 | 1 | 20084444 |
| 24 | FLANGE BOLT M10x1.25x50 | 2 | 20062515 |
| 25 | DRIVING GUIDE PULLEY | 3 | 20071208 |
| 26 | GUIDE PULLEY CUSHION SLEEVE | 2 | 20084442 |
| 27 | OIL DRAIN PUSH ROD | 1 | 20084654 |
| 28 | OIL DRAIN ROD BASE | 1 | 20084654 |

**CHASSIS ASSEMBLY**

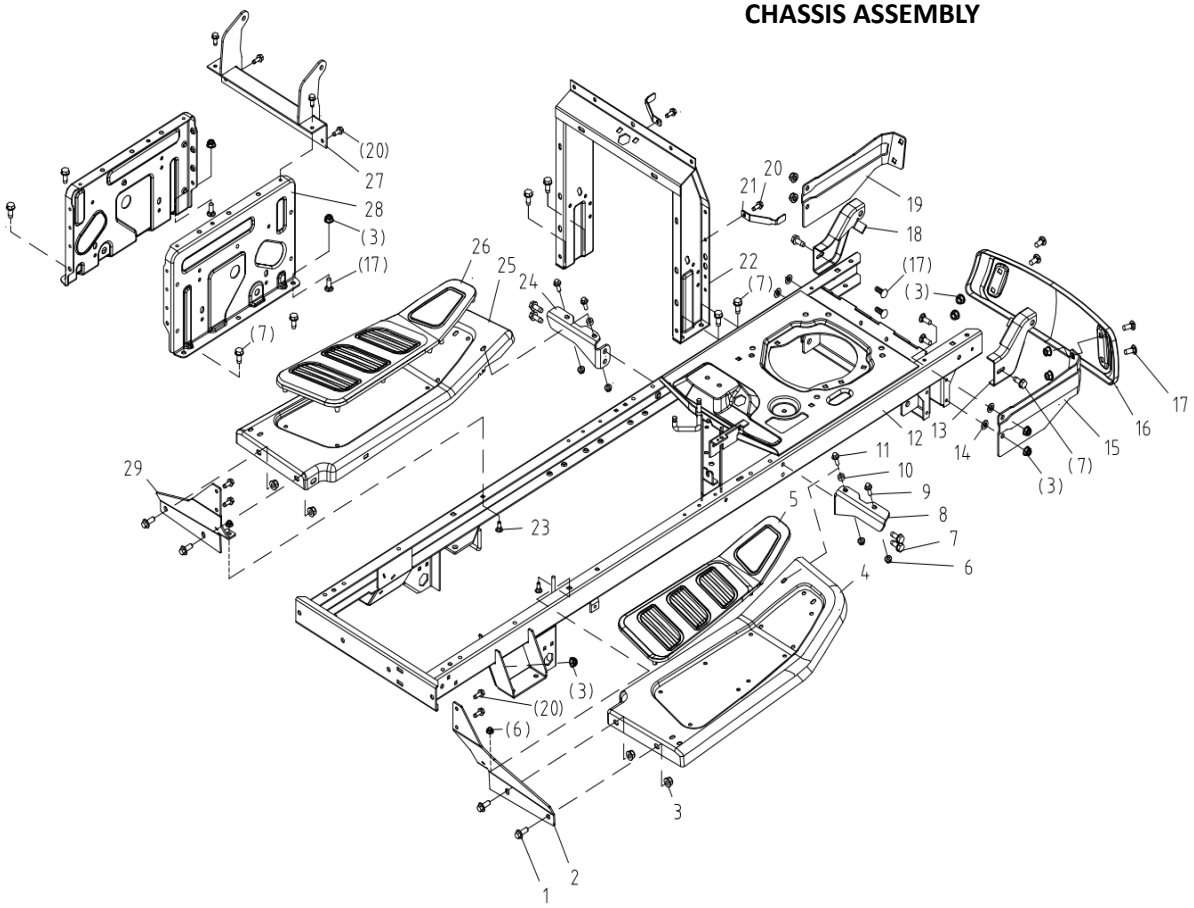


| NO | PART NAME | QTY | PART # |
|---|---|---|---|
| 1 | FLANGE BOLT M8x20 | 4 | 20061274 |
| 2 | RIGHT PEDAL HANGER | 1 | 20084428 |
| 3 | FLANGE LOCK NUT M8 | 14 | 20061348 |
| 4 | RIGHT PEDAL | 1 | 20084430 |
| 5 | RIGHT FOOT PAD | 1 | 20084393 |
| 6 | HEXAGON FLANGE LOCK NUT M6 | 6 | 20061385 |
| 7 | FLANGE BOLT 5/16-18TX3/4 | 14 | 20082799 |
| 8 | PEDAL FRONT SUPPORT RIGHT | 1 | 20084427 |
| 9 | FLANGE BOLT M6x16 | 2 | 20061200 |
| 10 | BUSHING | 2 | 20070916 |
| 11 | FLANGE BOLT M6x25 | 2 | 20061196 |
| 12 | CHASSIS | 1 | 20097093 |

| | | | |
|---|---|---|---|
| 13 | ENGINE COVER BRACKET RIGHT | 1 | 20098969 |
| 14 | LOCK WASHER 6 | 2 | 20062405 |
| 15 | RIGHT BUMPER ROD | 1 | 20095181 |
| 16 | BUMPER | 1 | 20085086 |
| 17 | BOLT M8x20 | 10 | 20061299 |
| 18 | ENGINE COVER BRACKET LEFT | 1 | 20098968 |
| 19 | LEFT BUMPER ROD | 1 | 20095166 |
| 20 | TAPPING SCREW M6x16 | 10 | 20082800 |
| 21 | STEERING | 2 | 20084384 |
| 22 | STEERING BRACKET | 1 | 20097072 |
| 23 | BOLT M6x16 | 2 | 20061289 |
| 24 | PEDAL FRONT SUPPORT LEFT | 1 | 20084422 |
| 25 | LEFT PEDAL | 1 | 20084429 |
| 26 | LEFT FOOT PAD | 1 | 20084388 |
| 27 | FRONT BEAM WELDMENT | 1 | 20084388 |
| 28 | SIDE PLATE | 2 | 20084399 |
| 29 | LEFT PEDAL HANGER | 1 | 20084414 |

**FRONT AXLE ASSEMBLY**

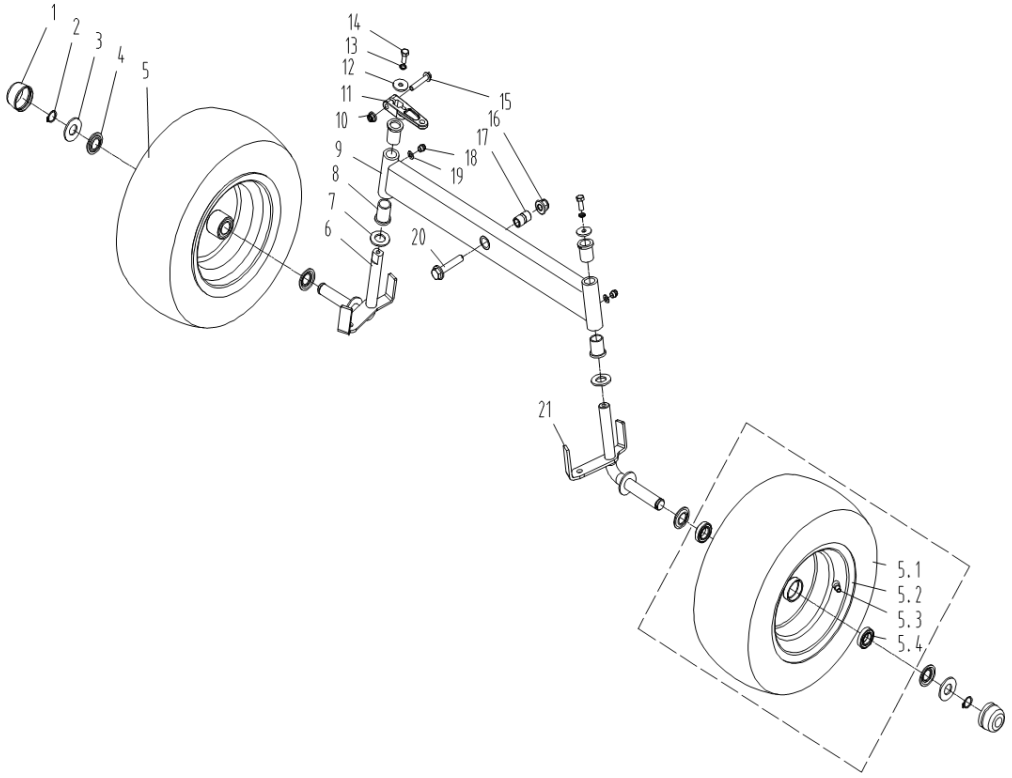

| NO | PART NAME | QTY | PART # |
|---|---|---|---|
| 1 | HUB COVER | 2 | 20068187 |
| 2 | SNAP RING 19 | 2 | 20061488 |
| 3 | WASHER ϕ20xϕ43x3 | 2 | 20071143 |
| 4 | WASHER | 4 | 20071144 |
| 5 | FRONT WHEEL ASSEMBLY | 2 | 20086529 |
| 5.1 | FRONT VACUUM TIRE | 1 | 20083980 |
| 5.2 | FRONT HUB | 2 | 20071149 |
| 5.3 | VALVE | 2 | 20061665 |
| 5.4 | BEARING 61904-2RZ | 4 | 20061595 |
| 6 | FRONT AXLE RH | 1 | 20084372 |
| 7 | WASHER 20 | 2 | 20061444 |
| 8 | BUSHING | 4 | 20070566 |
| 9 | FRONT AXLE WELDMENT | 1 | 20084364 |
| 10 | FLANGE LOCK NUT M8 | 1 | 20061348 |
| 11 | STEERING ARM | 1 | 20070941 |
| 12 | WASHER | 2 | 20091656 |
| 13 | SPRING WASHER 8 | 2 | 20061533 |
| 14 | BOLT M8x20 | 2 | 20061291 |
| 15 | FLANGE BOLT M8x45 | 1 | 20061256 |
| 16 | FLANGE LOCK NUT M12x1.25 | 1 | 20061359 |
| 17 | FRONT AXLE LINER | 1 | 20084370 |
| 18 | OIL INJECTION NOZZLE | 2 | 20061649 |
| 19 | WASHER 6 | 2 | 20061482 |
| 20 | FLANGE BOLT M12x1.25x55 | 1 | 20085752 |
| 21 | FRONT AXLE LH | 1 | 20084367 |

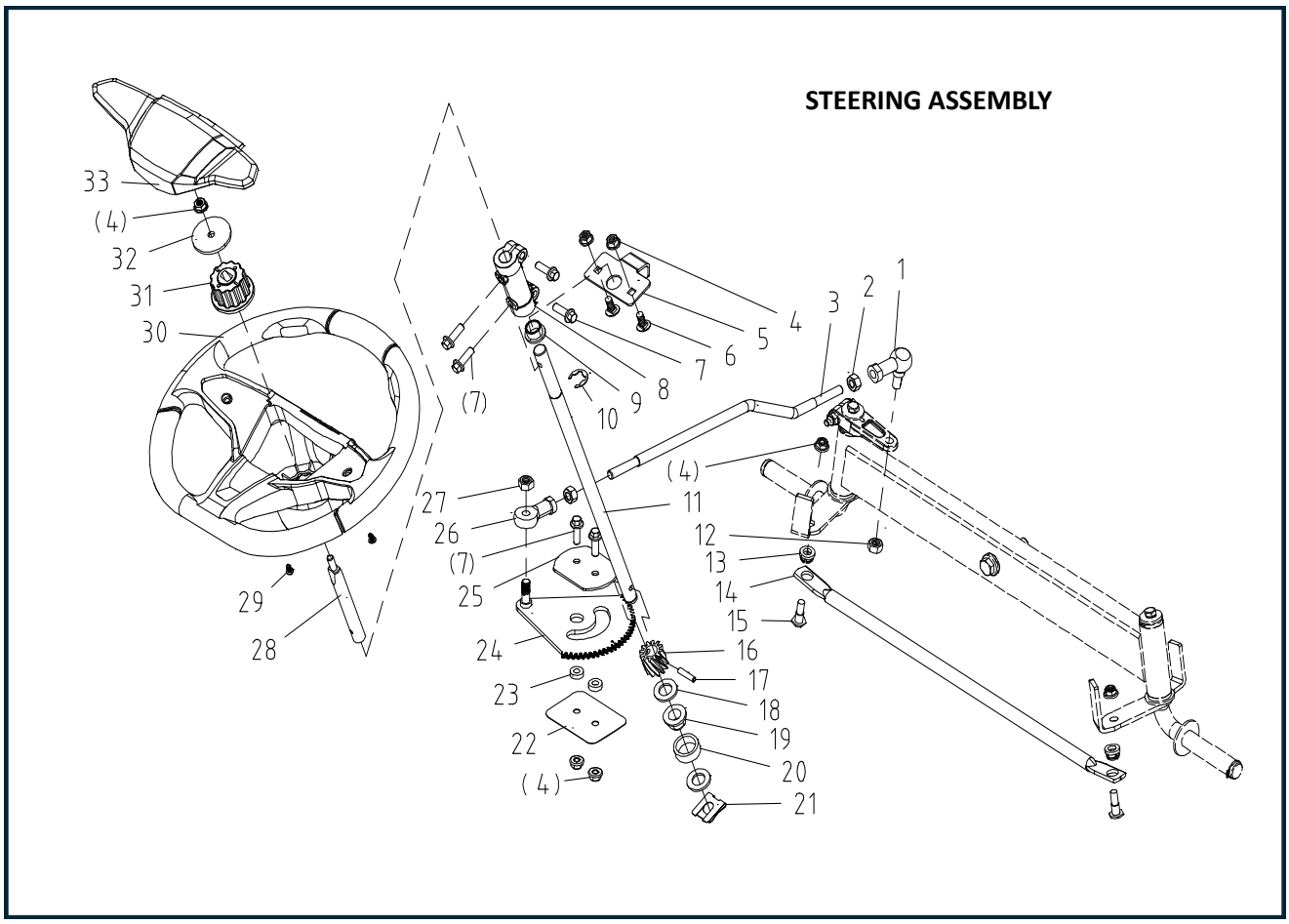


| NO | PART NAME | QTY | PART # |
|---|---|---|---|
| 1 | JOINT BEARING M10 | 1 | 20085366 |
| 2 | NUT M10 | 2 | 20061399 |
| 3 | STEERING DRAG ROD | 1 | 20084461 |
| 4 | FLANGE LOCK NUT M8 | 7 | 20061348 |
| 5 | SQUARE HOLE BOARD | 1 | 20084463 |
| 6 | SCREW M8×20 | 2 | 20061299 |
| 7 | FLANGE BOLT M8×25 | 6 | 20061298 |
| 8 | COUPLINGS | 1 | 20083389 |
| 9 | HATCH BUSHING | 1 | 20082643 |
| 10 | SNAP RING 15 | 1 | 20061548 |
| 11 | STEERING | 1 | 20084458 |
| 12 | LOCK NUT M10 | 1 | 20061419 |
| 13 | ELASTIC BUSHING | 2 | 20084462 |
| 14 | STEERING DRAG ROD | 1 | 20084456 |
| 15 | PIN SCREW M8×28 | 2 | 20084459 |
| 16 | STEERING GEAR LEFT | 1 | 20084457 |
| 17 | PIN 6×25 | 1 | 20097032 |
| 18 | WASHER 16 | 2 | 20061437 |
| 19 | HEXAGON BUSHING | 1 | 20070612 |

| | | | |
|---|---|---|---|
| 20 | BUSHING | 1 | 20071127 |
| 21 | SNAP RING 16 | 1 | 20085898 |
| 22 | TIE PLATE | 1 | 20070939 |
| 23 | BUSHING | 2 | 20070932 |
| 24 | STEERING GEAR PLATE WELDMENT | 1 | 20084464 |
| 25 | DOUBLE HOLE BOARD | 1 | 20070942 |
| 26 | JOINT BEARING SIJK10C | 1 | 20061641 |
| 27 | LOCK NUT M10×1.25 | 1 | 20061403 |
| 28 | STEERING WHEEL ADAPTER A | 1 | 20084465 |
| 29 | TAPPING SCREW ST4.8x16 | 2 | 20051824 |
| 30 | STEERING WHEEL | 1 | 20082707 |
| 31 | SPLINED HUB | 1 | 20079969 |
| 32 | WASHER | 1 | 20082683 |
| 33 | STEERING WHEEL CAP | 1 | 20082679 |

**REAR AXLE ASSEMBLY**

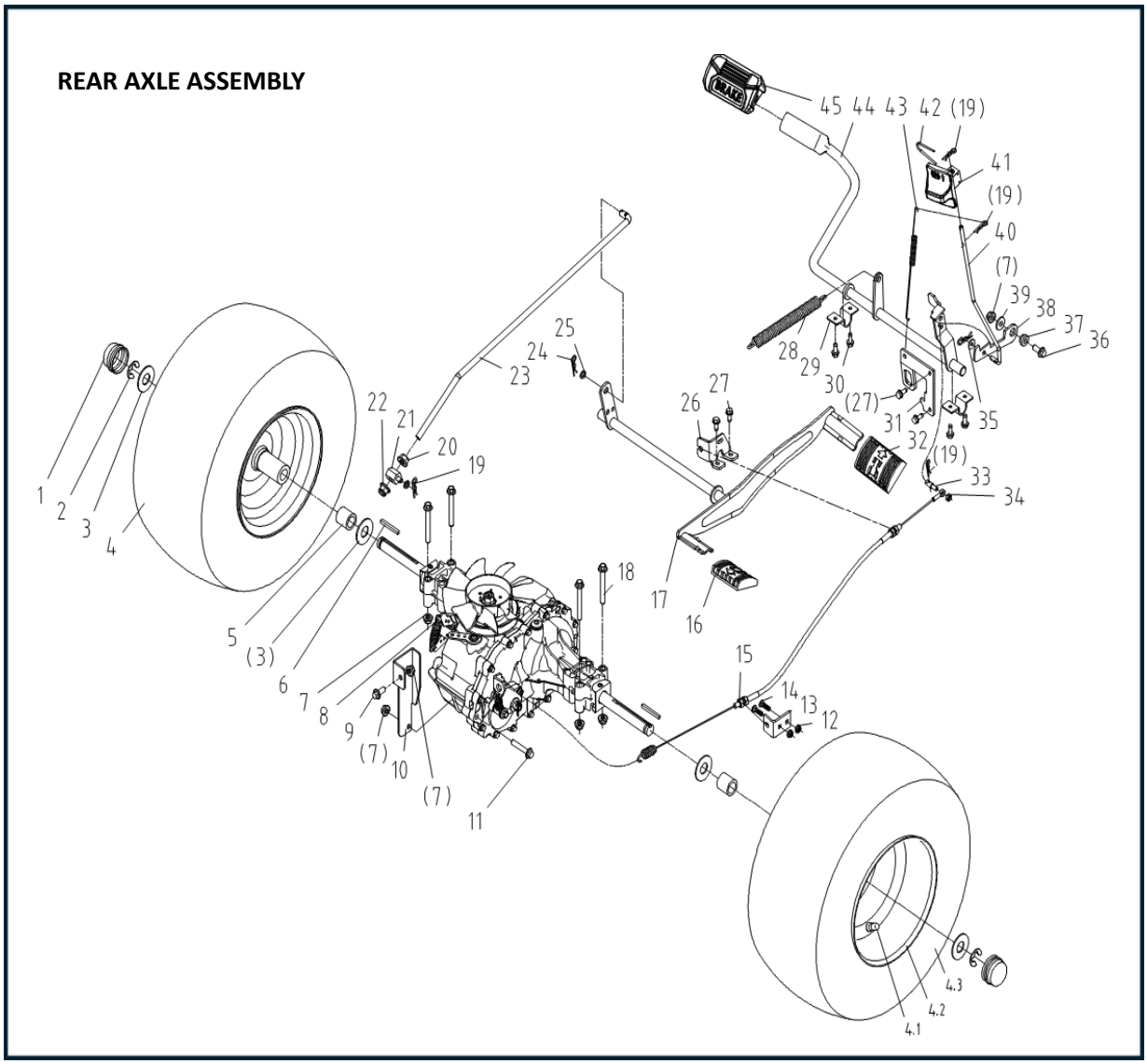


| NO | PART NAME | QTY | PART # |
|---|---|---|---|
| 1 | HUB COVER | 2 | 20068187 |
| 2 | RETAINING RING 15 | 2 | 20061430 |
| 3 | WASHER ϕ20×ϕ43×3 | 4 | 20071143 |
| 4 | REAR WHEEL ASSEMBLY | 2 | 20086530 |
| 4.1 | VALVE | 2 | 20061665 |
| 4.2 | REAR HUB | 2 | 20089809 |
| 4.3 | REAR VACUUM TIRE | 2 | 20093132 |
| 5 | REAR WHEEL PAD | 2 | 20071171 |
| 6 | FLAT KEY 4.8x60 | 2 | 20071174 |
| 7 | FLANGE LOCK NUT M8 | 7 | 20061348 |
| 8 | LONCIN HYDRAULIC DRIVE AXLE | 1 | 20089029 |

| | | | |
|---|---|---|---|
| 9 | FLANGE BOLT M8x20 | 1 | 20061274 |
| 10 | HYDRAULIC BRIDGE REAR FIXING PLATE (NON-352 ENGINE) | 1 | 20085923 |
| | REAR AXLE CONNECTION PLATE WELDING (WITH 352 ENGINE) | 1 | 20096876 |
| 11 | FLANGE BOLT M8x50 | 1 | 20061230 |
| 12 | FLANGE LOCK NUT M6 | 2 | 20061385 |
| 13 | CABLE SUPPORT | 1 | 20085192 |
| 14 | BOLT M6x16 | 2 | 20061289 |
| 15 | BRAKE CABLE | 1 | 20088865 |
| 16 | REVERSE PEDAL | 1 | 20068229 |
| 17 | FOOT LEVER WELDMENT | 1 | 20098545 |
| 18 | FLANGE BOLT 8x65 | 4 | 20061310 |
| 19 | ELASTIC LATCH (SMALL) | 5 | 20070582 |
| 20 | HEXAGON NUT 10x1.25 | 1 | 20061369 |
| 21 | PULL ROD PIN | 1 | 20096503 |
| 22 | LOCK NUT M10x1.25 | 1 | 20061403 |
| 23 | TRAVELLING PULL ROD | 1 | 20085194 |
| 24 | ELASTIC LATCH | 1 | 20070576 |
| 25 | WASHER 10 | 1 | 20061497 |
| 26 | CABLE FIXING PLATE | 1 | 20088861 |
| 27 | TAPPING SCREW M6x16 | 4 | 20082800 |
| 28 | BRAKE RETURN SPRING | 1 | 20084574 |
| 29 | U-SHAPED CLAMP | 2 | 20089912 |
| 30 | FLANGE BOLT 5/16-18TX3/4 | 4 | 20082799 |
| 31 | BRAKE SWITCH SEAT PLATE | 1 | 20089015 |
| 32 | FORWARD PEDAL | 1 | 20068230 |
| 33 | BRAKE PIN SHAFT | 1 | 20086191 |
| 34 | LOCK NUT M6 | 1 | 20061421 |
| 35 | WASHER 6 | 1 | 20061482 |
| 36 | FLANGE BOLT M8x25 | 1 | 20061250 |
| 37 | STEP SET | 1 | 20088842 |
| 38 | PARKING HOOK PLATE | 1 | 20090105 |
| 39 | BIG WASHER 8 | 1 | 20061541 |
| 40 | PARKING LEVER | 1 | 20090104 |
| 41 | PARKING HANDLE | 1 | 20085155 |

| | | | |
|---|---|---|---|
| 42 | U-SHAPED LATCH | 1 | 20084581 |
| 43 | CLUTCH LEVER SPRING | 1 | 20070894 |
| 44 | BRAKE PEDAL BAR WELDMENT (MANUAL) | 1 | 20092450 |
| 45 | BRAKE PEDAL | 1 | 20082728 |

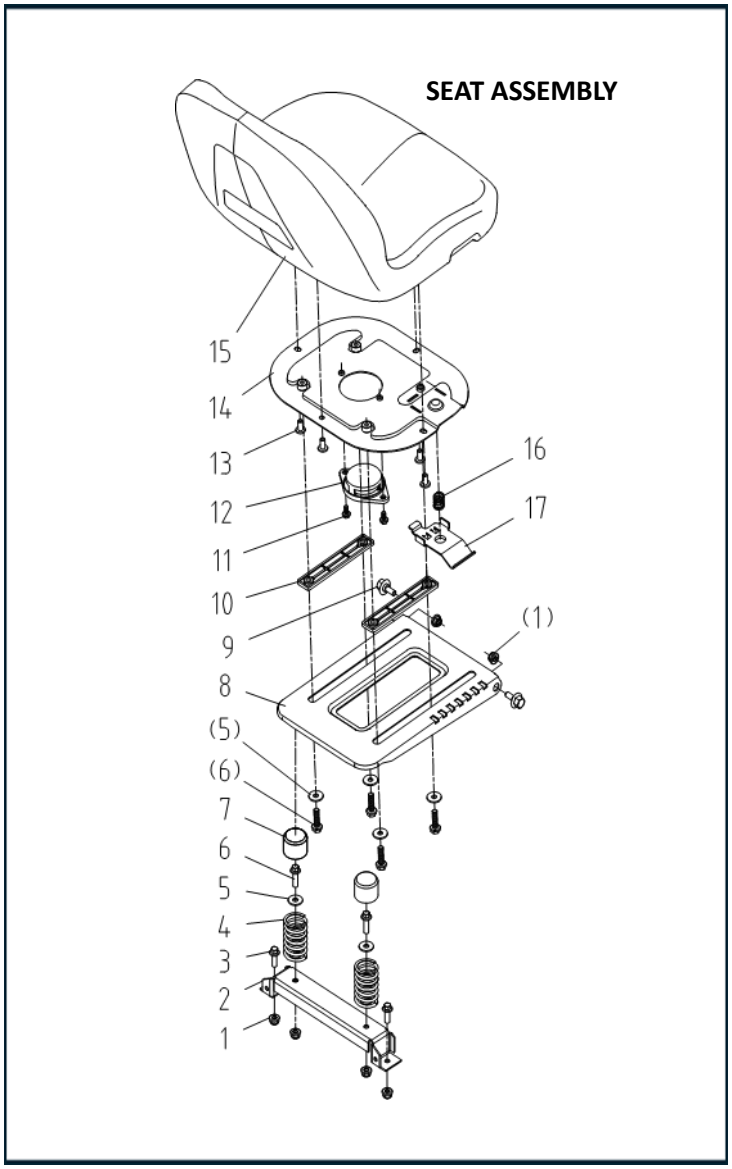


| NO | PART NAME | QTY | PART # |
|---|---|---|---|
| 1 | FLANGE LOCK NUT M8 | 6 | 20061348 |
| 2 | SEAT BACK BEAM | 1 | 20084447 |
| 3 | FLANGE BOLT M8×20 | 2 | 20061274 |
| 4 | SEAT SPRING | 2 | 20070964 |
| 5 | BIG WASHER | 6 | 20061541 |

| | | | |
|---|---|---|---|
| 6 | FLANGE BOLT M8×25 | 6 | 20061298 |
| 7 | SPRING CAP | 2 | 20068240 |
| 8 | ADJUSTABLE SEAT BASE PLATE | 1 | 20092225 |
| 9 | SEAT SCREW | 2 | 20088755 |
| 10 | SEAT CUSHION STRIP | 2 | 20088754 |
| 11 | TAPPING SCREW M6x16 | 2 | 20082800 |
| 12 | SEAT SWITCH COMPONENTS | 1 | 20088756 |
| 13 | HEXAGON SOCKET FLAT ROUND HEAD SCREW M8x20 | 4 | 20062556 |
| 14 | SEAT PLATE | 1 | 20091256 |
| 15 | SEAT ZJZY2-3 | 1 | 20092693 |
| 16 | SPRING | 1 | 20091602 |
| 17 | SEAT ADJUSTMENT PLATE | 1 | 20092317 |

**SUSPENSION ASSEMBLY**

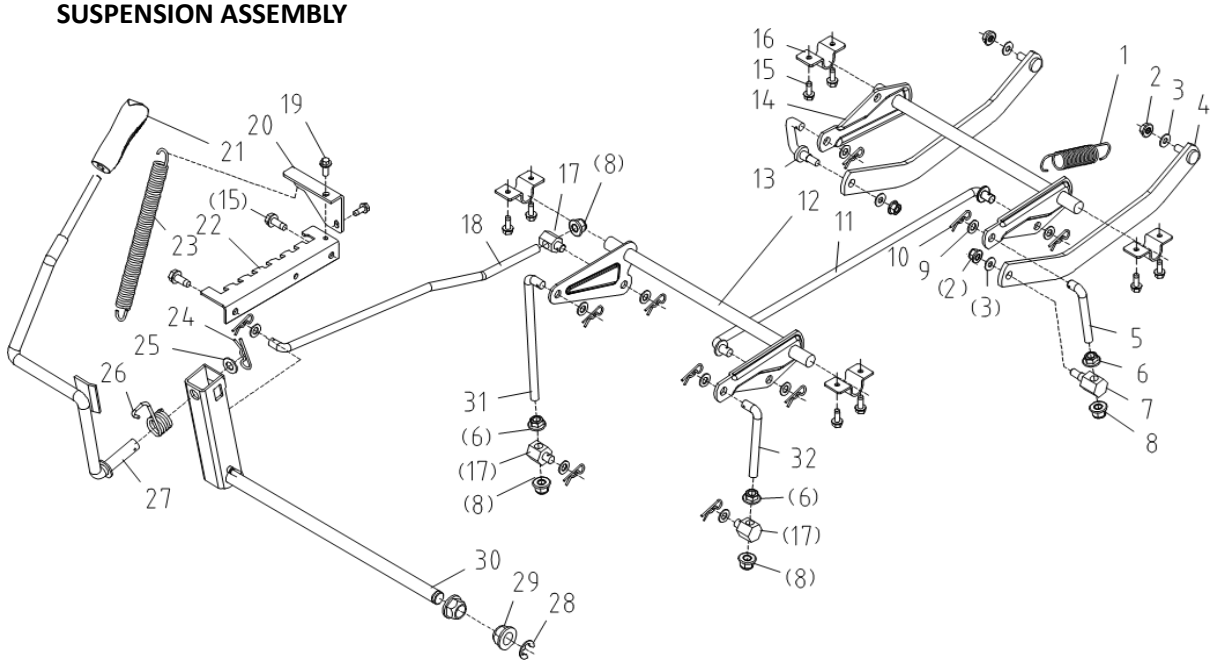

| PLT42LH2 LAWN TRACTOR | | | |
|---|---|---|---|
| **NO** | **PART NAME** | **QTY** | **PART #** |
| 1 | SPRING | 1 | 20095090 |
| 2 | FLANGE LOCK NUT M8 | 4 | 20061348 |
| 3 | BIG WASHER | 4 | 20061541 |
| 4 | FRONT STAY WELDMENT | 2 | 20093410 |
| 5 | FRONT RIGHT LEVER | 1 | 20084557 |
| 6 | HEXAGON NUT 10x1.25 | 3 | 20061369 |
| 7 | PIN | 1 | 20084533 |
| 8 | FLANGE LOCK NUT M10×1.25 | 4 | 20061405 |
| 9 | WASHER 10 | 10 | 20061497 |
| 10 | SPRING PIN | 10 | 20070576 |
| 11 | LIFTING LINK ROD WELDMENT (SIDE ROW) | 1 | 20095494 |
| 12 | REAR ARM WELDMENT (SIDE ROW) | 1 | 20084723 |
| 13 | U-SHAPED LEVER | 1 | 20084553 |
| 14 | FRONT ARM WELDMENT | 1 | 20084560 |
| 15 | FLANGE BOLT 5/16-18TX3/4 | 10 | 20082799 |
| 16 | U-SHAPED CLAMP | 4 | 20089912 |
| 17 | PIN JOINT | 3 | 20085750 |
| 18 | LIFTING TIE ROD (SIDE ROW) | 1 | 20084726 |
| 19 | TAPPING SCREW M6x16 | 2 | 20082800 |
| 20 | SPRING HANGING PLATE | 1 | 20085316 |
| 21 | HANDLE | 1 | 20070900 |
| 22 | RATCHET PLATE | 1 | 20084549 |
| 23 | LIFTING SPRING | 1 | 20084564 |
| 24 | COTTER PIN ϕ3 | 1 | 20071251 |
| 25 | WASHER 14x1.5 | 1 | 20062529 |
| 26 | RIGHT SPRING | 1 | 20071354 |
| 27 | LIFTING ROD WELDED FITTING | 1 | 20084535 |
| 28 | RETAINER RING 12 | 1 | 20061473 |
| 29 | HEXAGON BUSHING | 2 | 20070612 |
| 30 | LIFTING ARM WELDED FITTING | 1 | 20092440 |
| 31 | REAR LEFT ADJUSTING LEVER | 1 | 20094620 |

| | | | |
|---|---|---|---|
| 32 | REAR RIGHT ADJUSTING LEVER | 1 | 20094621 |

‘

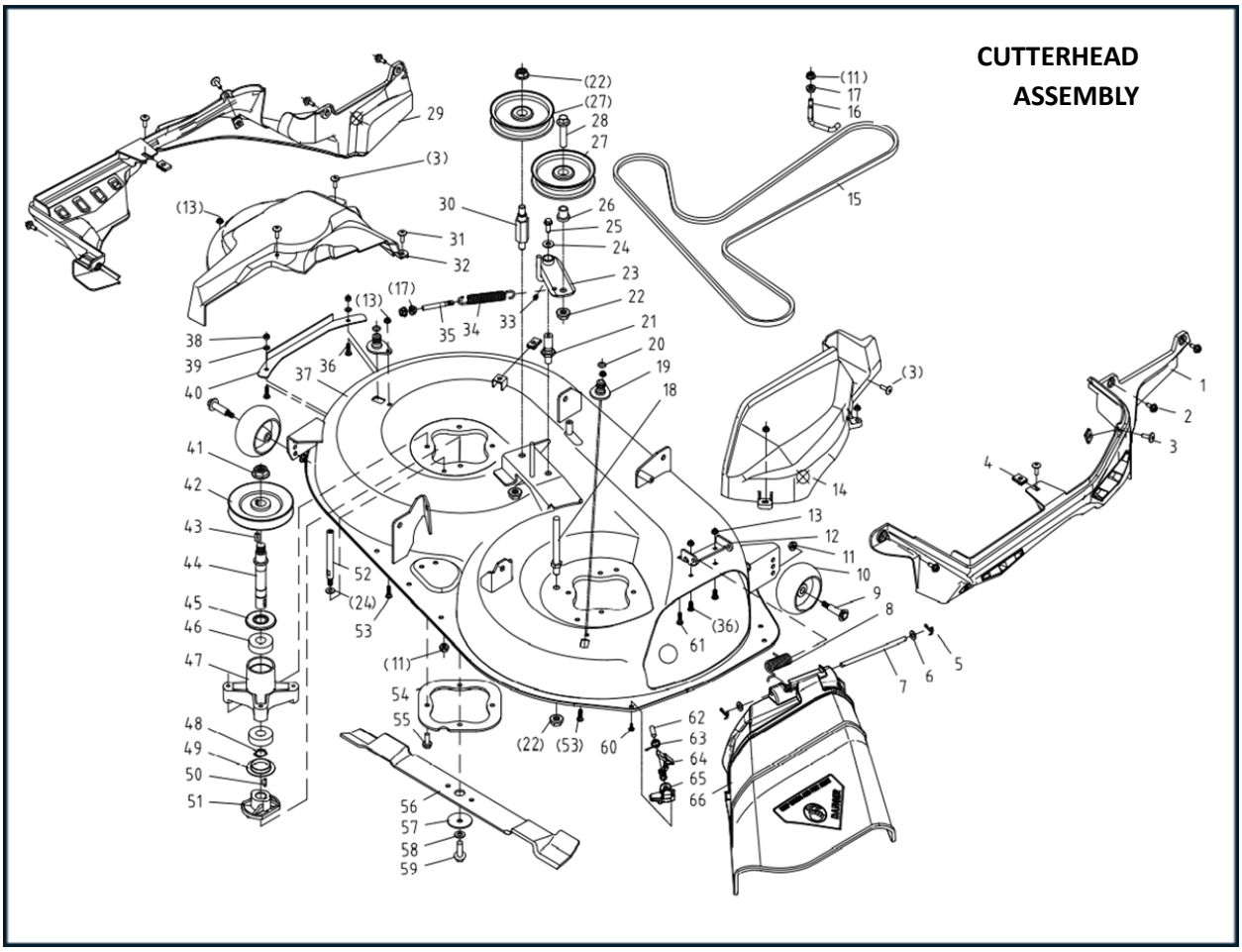


| NO | PART NAME | QTY | PART # |
|---|---|---|---|
| 1 | RIGHT BELT COVER | 1 | 20086269 |
| 2 | HEXAGONAL HEAD TAPPING SCREW 6.3x11.5 | 6 | 20082801 |
| 3 | SCREW M6×16 | 7 | 20060893 |
| 4 | BUCKLE NUT M6 | 5 | 20070630 |
| 5 | COTTER PIN 2.5X20 | 2 | 20097934 |
| 6 | WASHER 8 | 4 | 20061544 |
| 7 | PIN ϕ8×168 | 1 | 20082335 |
| 8 | TORSION SPRING | 1 | 20086192 |
| 9 | WHEEL AXLE | 2 | 20085378 |

| | | | |
|---|---|---|---|
| 10 | WHEEL | 2 | 20088559 |
| 11 | FLANGE LOCK NUT M8 | 3 | 20061348 |
| 12 | HINGE | 1 | 20098326 |
| 13 | FLANGE LOCK NUT M6 | 7 | 20061385 |
| 14 | RIGHT BELT WHEEL COVER | 1 | 20086316 |
| 15 | V BELT 4L920 | 1 | 20093639 |
| 16 | CLUTCH BELT GEAR LEVER | 1 | 20093277 |
| 17 | FLANGE NUT M8 | 3 | 20061336 |
| 18 | GEAR LEVER ϕ12 | 1 | 20093232 |
| 19 | SPOUT | 2 | 20070624 |
| 20 | O RING 11.2×2.65 | 2 | 20055756 |
| 21 | TENSION ARM SHAFT | 1 | 20093235 |
| 22 | FLANGE LOCK NUT M12×1.25 | 4 | 20061359 |
| 23 | CUT TENSION ARM ASSEMBLY | 1 | 20094144 |
| 24 | BIG WASHER 8 | 2 | 20061541 |
| 25 | FLANGE BOLT M8x16 | 1 | 20061309 |
| 26 | TENSIONING CUSHION SLEEVE | 1 | 20084617 |
| 27 | IDLENESS PULLEY | 2 | 20070908 |
| 28 | FLANGE BOLT M10×1.25×35 | 1 | 20061286 |
| 29 | LEFT GUARD | 1 | 20086267 |
| 30 | IDLENESS PULLEY SHAFT | 1 | 20097097 |
| 31 | SCREW M6×12 | 1 | 20060923 |
| 32 | LEFT BELT WHEEL COVER | 1 | 20086315 |
| 33 | OIL INJECTION NOZZLE | 1 | 20092292 |
| 34 | SPRING | 1 | 20070875 |
| 35 | ADJUSTMENT SCREW | 1 | 20098363 |
| 36 | BOLT M6×16 | 4 | 20061289 |
| 37 | DECK WELDMENT | 1 | 20097099 |
| 38 | HEXAGON LOCK NUT M6 | 2 | 20061421 |
| 39 | WASHER 6 | 2 | 20061482 |
| 40 | REINFORCEMENT PLATE | 1 | 20086368 |
| 41 | NUT FOR BLADE AXLE | 2 | 20070627 |
| 42 | PULLEY | 2 | 20070638 |
| 43 | FLAT KEY C6×18 | 2 | 20061650 |
| 44 | BLADE SPINDLE | 2 | 20070622 |
| 45 | HOOD, BEARING | 2 | 20071285 |

| | | | |
|---|---|---|---|
| 46 | BEARING 6204-2RZ | 4 | 20092592 |
| 47 | BLADE BASE | 2 | 20054347 |
| 48 | SNAP RING 19 | 2 | 20061488 |
| 49 | HOOD, BEARING | 2 | 20070635 |
| 50 | HALFMOON KEY 4×16 | 2 | 20061651 |
| 51 | BLADE ADAPTER | 2 | 20054345 |
| 52 | STUD SCREW | 2 | 20070892 |
| 53 | SCREW M6×30 | 2 | 20061249 |
| 54 | DECK REINFORCEMENT PLATE | 2 | 20093234 |
| 55 | FLANGE BOLT M8x35 | 8 | 20061265 |
| 56 | BLADE | 2 | 20071405 |
| 57 | DISC WASHER | 2 | 20070623 |
| 58 | WASHER 10 | 2 | 20061497 |
| 59 | BOLT | 2 | 20061267 |
| 60 | TAPPING SCREW ST4.8×13 | 1 | 20051827 |
| 65 | SELF-LOCKING BASE | 1 | 20086277 |
| 66 | DISCHARGE CHUTE | 1 | 20086249 |
| 31 | SCREW M6×12 | 1 | 20060923 |
| 32 | LEFT BELT WHEEL COVER | 1 | 20086315 |
| 33 | OIL INJECTION NOZZLE | 1 | 20092292 |
| 34 | SPRING | 1 | 20070875 |

**ELECTRICAL ASSEMBLY**

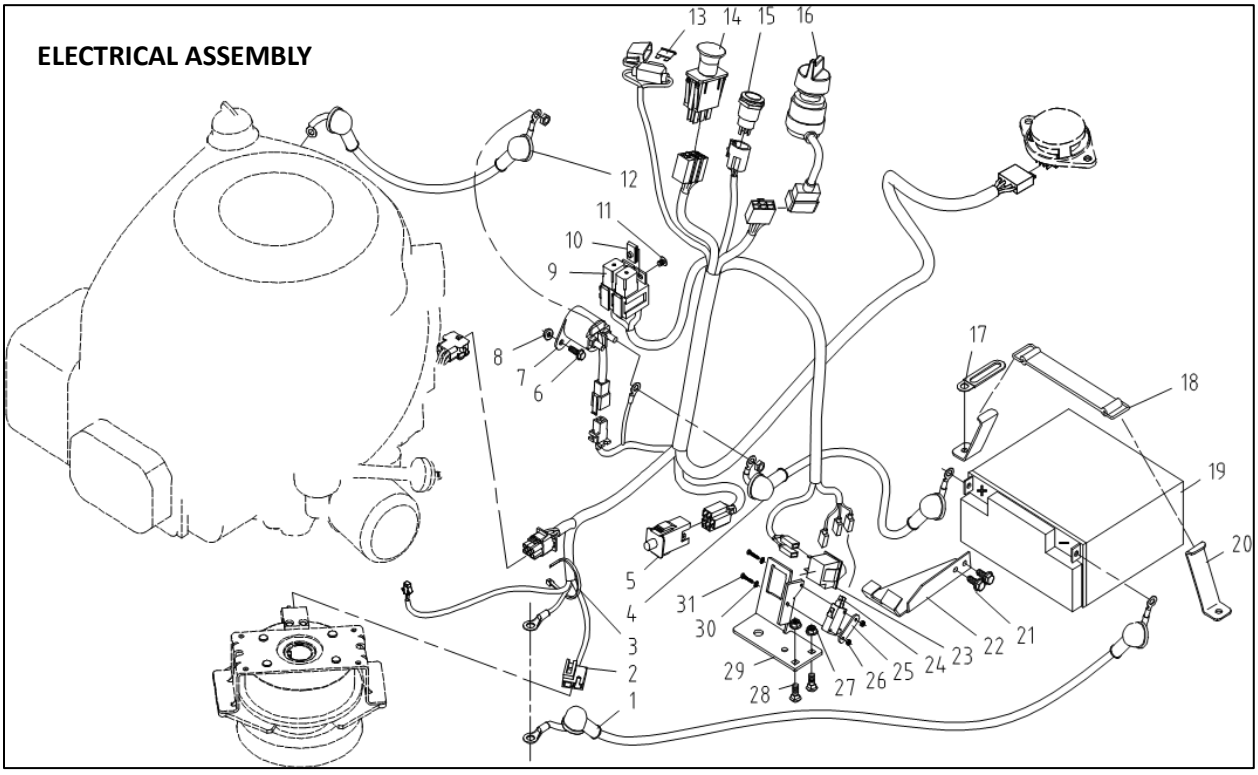

| PLT42LH2 LAWN TRACTOR | | | |
|---|---|---|---|
| **NO** | **PART NAME** | **QTY** | **PART #** |
| 1 | GROUND CABLE | 1 | 20085496 |
| 2 | ELECTRIC CABLE (ELECTRIC START) | 1 | 20097573 |
| 3 | CABLE TIE | 20 | 20051895 |
| | CABLE TIE | 2 | 20086002 |
| 4 | BATTERY CABLE | 1 | 20084624 |
| 5 | SWITCH, PLUNGER | 1 | 20093538 |
| 6 | BOLT M5×16 | 2 | 20061186 |
| 7 | STARTER RELAY | 1 | 20071221 |
| 8 | FLANGE LOCK NUT M5 | 2 | 20061341 |
| 9 | RELAY YAP23H-12-HR | 2 | 20089006 |
| 10 | BUCKLE NUT M5 | 1 | 20089880 |
| 11 | SCREW M5×12 | 1 | 20061195 |
| 12 | POWER CABLE | 1 | 20084637 |
| 13 | FUSE BRM148S，20A | 1 | 20085696 |
| 14 | SWITCH, PTO | 1 | 20097587 |
| 15 | SWITCH | 1 | 20096310 |
| 16 | ELECTRIC DOOR LOCK | 1 | 20089345 |
| 17 | WIRE CLAMP | 1 | 20089223 |
| 18 | BATTERY PULL STRAP | 1 | 20070744 |
| 19 | BATTERY 12V 18Ah | 1 | 20092080 |
| 20 | HOOK | 2 | 20084632 |
| 21 | TAPPING SCREW M6x1 | 2 | 20082800 |
| 22 | EMPTY REVERSE SWITCH PLATE | 1 | 20098553 |
| 23 | SWITCH | 1 | 20086270 |
| 24 | SHORT LEVER MICROSWITCH | 1 | 20092446 |
| 25 | WASHER | 1 | 20098555 |
| 26 | NUT M3 | 2 | 20061334 |
| 27 | HEXAGON FLANGE LOCK NUT M6 | 2 | 20061385 |
| 28 | BOLT M6×16 | 2 | 20061289 |
| 29 | EMPTY REVERSE SWITCH MOUNTING PLATE | 1 | 20092970 |
| 30 | WASHER 3 | 2 | 20084633 |
| 31 | SCREW M3x20 | 2 | 20051763 |

**HOUSING ASSEMBLY**

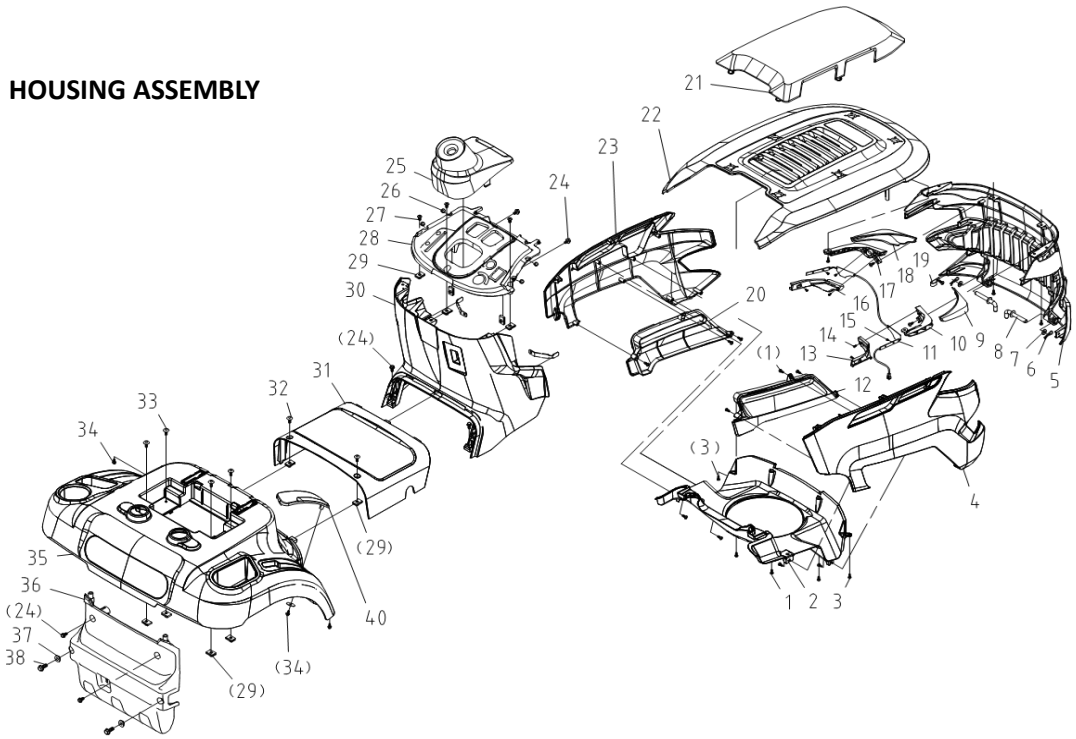


| NO | PART NAME | QTY | PART # |
|---|---|---|---|
| 1 | SCREW ST4.8×16 | 29 | 20061038 |
| 2 | AIR DEFLECTOR | 1 | 20084507 |
| 3 | SCREW ST4.8×20 | 2 | 20084497 |
| 4 | RIGHT SIDE COVER A | 1 | 20085244 |
| 5 | FRONT COVER A | 1 | 20085247 |
| 6 | SPRING PIN | 2 | 20070576 |
| 7 | WASHER 10 | 2 | 20061497 |
| 8 | PIN | 2 | 20078136 |
| 9 | RIGHT LIGHT COVER A | 1 | 20085248 |
| 10 | RIGHT LIGHT HOLDER A | 1 | 20085239 |
| 11 | LED LIGHT PANEL ASSEMBLY | 1 | 20085768 |
| 12 | RIGHT AIR INTAKE HOOD A | 1 | 20085246 |
| 13 | RIGHT LIGHT REAR COVER | 1 | 20085872 |
| 14 | TAPPING SCREW ST2.9x12 | 4 | 20051768 |
| 15 | TAPPING SCREW ST3x8 | 4 | 20051777 |

| | | | |
|---|---|---|---|
| 16 | LEFT LIGHT REAR COVER | 1 | 20085871 |
| 17 | LEFT LIGHT BASE A | 1 | 20085245 |
| 18 | RIGHT LIGHT BASE A | 1 | 20085241 |
| 19 | IGNITION WIRE CLAMP | 4 | 20050895 |
| 20 | LEFT AIR INTAKE HOOD A | 1 | 20085243 |
| 21 | DECORATIVE COVER A | 1 | 20085392 |
| 22 | UPPER COVER A | 1 | 20085250 |
| 23 | LEFT SIDE COVER A | 1 | 20085240 |
| 24 | SCREW 6x16 | 6 | 20082800 |
| 25 | STEERING WHEEL COVER | 1 | 20084503 |
| 26 | HANDLE SHOCK-ABSORBING RUBBER | 4 | 20075146 |
| 27 | SCREW M6×16 | 3 | 20061013 |
| 28 | PANEL | 1 | 20084494 |
| 29 | BUCKLE NUT M6 | 9 | 20070630 |
| 30 | SHIELD | 1 | 20091237 |
| 31 | MAINTENANCE COVER | 1 | 20085331 |
| 32 | SCREW M6×16 | 2 | 20060893 |
| 33 | SCREW M6×25 | 4 | 20060919 |
| 34 | TAPPING SCREW ST4.8x16 | 3 | 20084298 |
| 35 | SIDE ROW REAR SEAT | 1 | 20091776 |
| 36 | BUSHING COVER | 1 | 20093089 |
| 37 | Bushing | 2 | 20070780 |
| 38 | FLANGE BOLT M8×20 | 2 | 20061274 |
| 39 | GASKET 6.5×25×1.4 | 1 | 20071676 |
| 40 | GEAR TRIM PLATE | 1 | 20091266 |

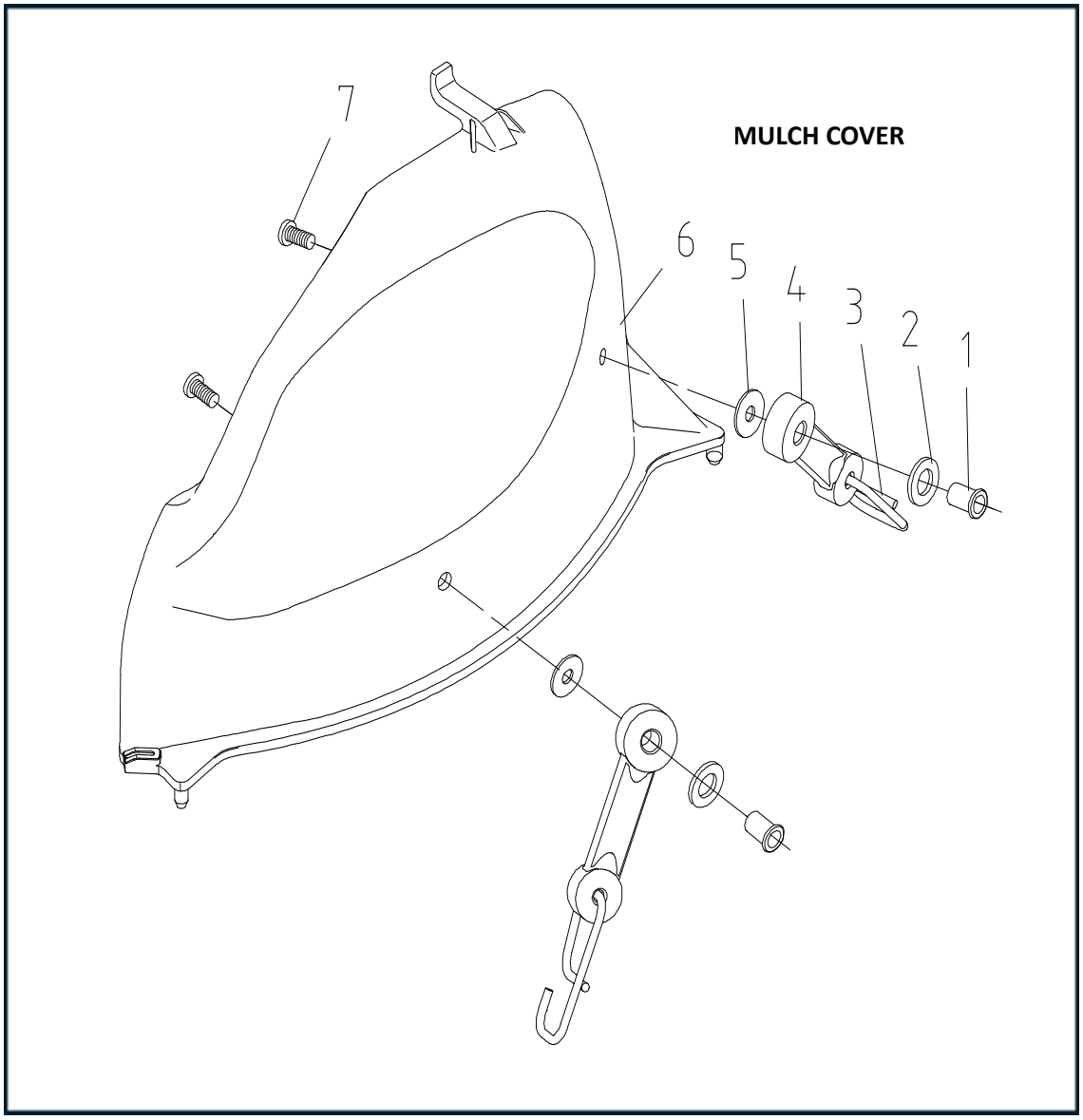


| NO | PART NAME | QTY | PART # |
|---|---|---|---|
| 1 | FLANGE BOLT M8×40 | 2 | 20061254 |
| 2 | TRACTION PLATE WELDING | 1 | 20085158 |
| 3 | TRACTION PAD COVER | 2 | 20085165 |
| 4 | TRACTION LATCH WELDING | 1 | 20086357 |
| 5 | COTTER PIN ϕ3 | 1 | 20071251 |

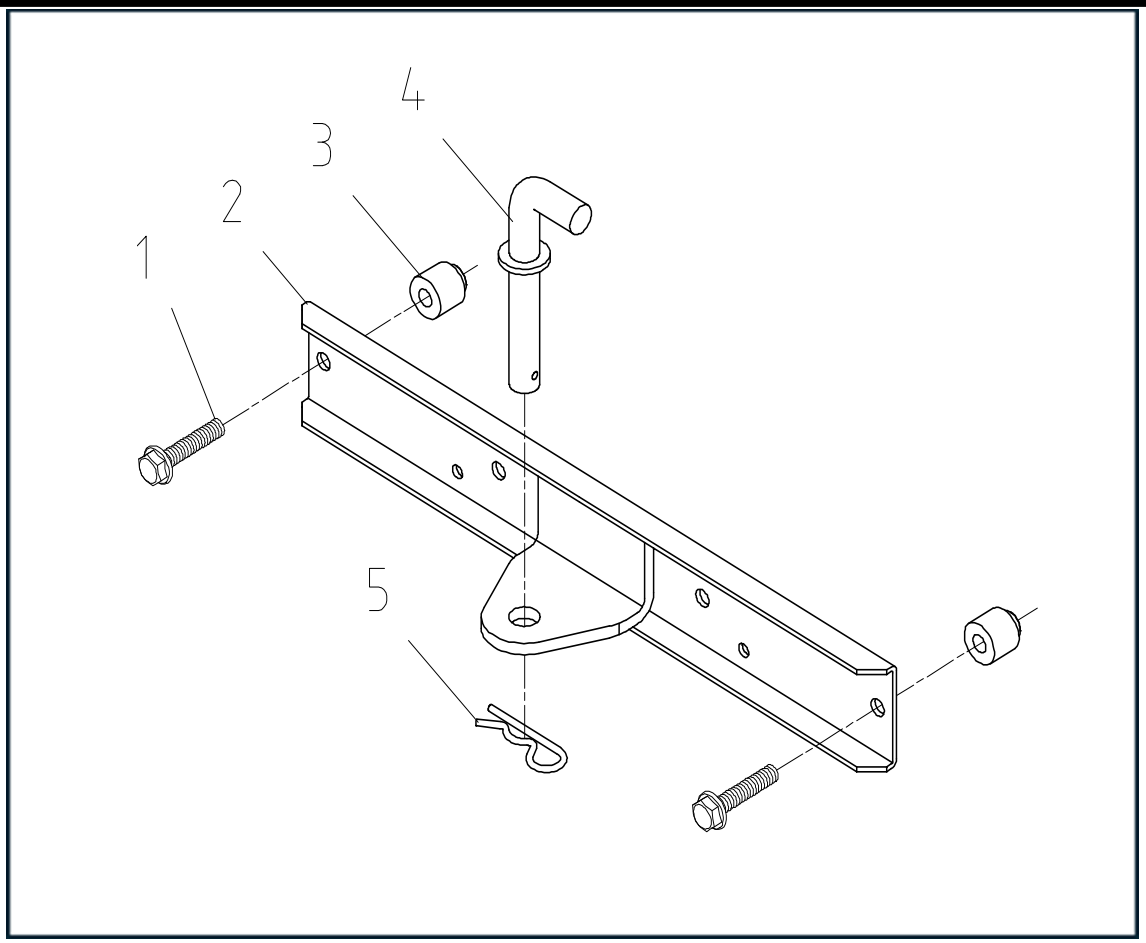


| NO | PART NAME | QTY | PART # |
|---|---|---|---|
| 1 | FLANGE BOLT M8×40 | 2 | 20061254 |
| 2 | TRACTION PLATE WELDING | 1 | 20085158 |
| 3 | TRACTION PAD COVER | 2 | 20085165 |
| 4 | TRACTION LATCH WELDING | 1 | 20086357 |
| 5 | COTTER PIN ϕ3 | 1 | 20071251 |

# PRORUN LIMITED WARRANTY

## WARRANTY COVERAGE:

PRORUN, a brand under Topsun USA Inc., warrants that its products are free from defects in material or workmanship under normal use and maintenance. The company will, at its discretion, repair or replace any defective product or part covered by this Limited Warranty, free of charge at any authorized Servicing Dealer/Center using OEM replacement parts, subject to the limitations and exclusions described below.

## LIMITED WARRANTY PERIOD:

PRORUN products are warranted to the original retail purchaser from the date of retail purchase for the applicable period of time specified in the product documentation or as listed below. Please note that certain products may have extended warranties as indicated.

## WHAT IS NOT COVERED:

This Limited Warranty does not cover:

- Replacement of normal wear parts, including but not limited to air filters, belts, blades (excluding normal wear for electric units), fuel filters, lubricants, spark plugs, seats, etc.
- Damage caused by improper use, neglect, modifications, improper servicing, or use of unauthorized
- attachments.
- Damage resulting from the use of improper fuel or failure to follow prescribed fuel and oil usage.
- Damage caused by external factors such as accidents or events beyond PRORUN's reasonable control.
- Damage due to improper setup, pre-delivery service, or repair service by unauthorized personnel.
- Damage to batteries, including failure due to discharge or improper voltage use, is not covered under this warranty. Please note that batteries can be susceptible to damage from improper storage, particularly in extremely low temperatures. It is recommended that users store batteries indoors during the winter or any period of extreme temperatures to prevent potential damage.
- Damage due to exposure of products to temperatures outside product specifications.

## YOUR RESPONSIBILITIES:

To maintain your rights under this Limited Warranty, you must exercise reasonable care and use of the product as outlined in the operator's manual. Failure to perform required maintenance as described will void this warranty. Additionally, you must cease using the product immediately upon any failure or damage and take it to an authorized servicing dealer for inspection.

## LIMITATION OF LIABILITY FOR PERSONAL INJURY:

PRORUN shall not be liable for any personal injury, including but not limited to bodily harm, illness, or death, arising from the use, misuse, or improper handling of its products. Users assume all risks associated with the use of PRORUN products and are responsible for ensuring safe operation and adherence to safety guidelines provided in the operator's manual. PRORUN

shall not be held liable for any damages or injuries resulting from misuse, negligence, improper maintenance, alteration, or unauthorized repair of its products. Users are advised to exercise caution and follow all safety precautions to prevent personal injury while using PRORUN products.

## WARRANTY EXCLUSIONS, DISCLAIMERS, AND LIMITED RIGHTS:

PRORUN shall not be liable for any incidental, consequential, special, or punitive damages or losses. Your remedy is limited to repair or replacement of the product or part, at PRORUN's discretion. The company's liability shall not exceed the actual amount paid for the defective product.
It should be noted that PRORUN is not liable for any personal injury due to misuse. Our manuals typically include safety requirements that users must adhere to.

## HOW TO OBTAIN SERVICE:

To obtain warranty service, you must take your product to an authorized Servicing Dealer/Center. Proof of purchase is required, including date, product model, and serial number. Any costs associated with transporting the product are your responsibility.
For assistance in locating an authorized Servicing Dealer/Center or for inquiries, please visit https://www.proruntools.com or contact our customer service hotline at 1-844-905-0882.

## ADDITIONAL INFORMATION:

Registering your product is not a condition of warranty service; however, it may help ensure that you receive important product information.

## DISCLAIMER:

This Limited Warranty gives you specific legal rights, and you may also have other rights based on your locality. Any warranty implied by state law is hereby disclaimed to the extent permitted by law. Some localities may not allow exclusions of incidental or consequential damages or limitations on how long an implied warranty lasts, so the above limitations may not apply to you.

| Product Platform | Residential Warranty | Commercial Warranty |
|---|---|---|
| **20V Handheld (Lithium-Ion)** | 3 Years (Tool & Battery) | Not Currently Available |
| **60V Handheld (Lithium-Ion)** | 3 Years (Tool & Battery) | 1 Year (Tool & Battery) |
| **Gas Handheld** | 3 Years | 1 Year |
| **48V Wheeled (Lead-Acid)** | 3 Years (Tool & Battery) | Not Currently Available |
| **60V Wheeled (Lithium-Ion)** | 3 Years (Tool & Battery) | Not Currently Available |
| **Gas Wheeled** | 3 Years | Not Currently Available |

**Note:**
This warranty page is subject to change without notice. Please refer to the latest product documentation or contact customer service for the most up-to-date warranty information.

PRORUN regularly improves our products, and you may find slight differences between your machine and the descriptions contained within this operator's manual. Modifications can be made to the machine without notice and without the obligation to update the manual, provided that the essential safety and functional characteristics remain unaltered. Contact PRORUN Customer Service with any questions and for current specifications.

PRORUN / SUNFUTURE INC.
200 Overhill Drive, Suite A
Mooresville, NC 28117
www.proruntech.com

Zhejiang Zhongjian Technology Co., Ltd
Web: www.topsunpower.cc
E-mail: sales@topsunpower.cc
ADD: No.155 Mingyuan North AVE, Economic Development Zone,
Yongkang, Zhejiang, 321300, P.R. CHINA
Made in China

# LC1P91F ENGINE
# PLT42LH2 546CC LAWN TRACTOR
## OWNER'S MANUAL



**READ ALL INSTRUCTIONS BEFORE FIRST USE.**
**KEEP THIS MANUAL FOR FUTURE REFERENCE.**
**KEEP OUT OF REACH OF CHILDREN**



**WEAR CSA APPROVED EYE PROTECTION**



**WEAR EAR PROTECTION**



**WEAR FACE PROTECTION**

# TABLE OF CONTENTS


1. General information
2. Safety regulations
3. Components and controls
4. What you need to know
5. Standards of use
6. Maintenance
7. Troubleshooting
8. Technical data


# 1. GENERAL INFORMATION

### READING AND UNDERSTANDING THE MANUAL

Some paragraphs in the manual containing information of particular importance for safety and operation are highlighted at various levels of emphasis, and signify
the following:

⚠ **NOTE or WARNING!**

These give details or further information on what has already been said and aim to prevent damage either to the engine or to other damage.

⚠ **WARNING!**

Non-observance will result in the risk of injury to oneself or others.

⚠ **DANGER!**

Non-observance will result in the risk of
serious injury or death to oneself or others.

⚠ **NOTE**

All indications, "*front*", "rear", "*right*", and "*left*", are to be taken as referring to the engine positioned with the spark plug facing forward with respect to the observer.

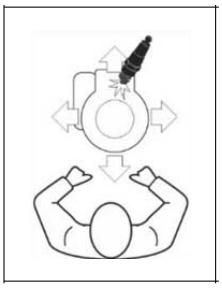

The number before the paragraph title refers to the text references and their related figures (shown inside front and back covers).

## SAFETY SYMBOLS

Your engine should be used with due care and attention. Symbols have therefore been placed on the engine to remind you of the main precautions to be taken. Their full meaning is explained later.
You are also asked to carefully read the safety regulations in the applicable chapter of this handbook.

⚠ **WARNING!**
Read and follow the Operating Instructions before running the engine.

⚠ **WARNING!**
Gasoline is flammable. Allow the engine to cool at least 2 minutes before refueling.

⚠ **WARNING!**
Engines emit carbon monoxide. DO NOT run in enclosed areas.

## GENERAL SAFETY STANDARDS

**A. TRAINING**

1. Carefully read the instructions contained in this manual and the instructions of the machine on which this engine is installed. Learn how to stop the engine quickly.
2. Never allow people unfamiliar with these instructions to use the engine.
3. Never use the engine while people, especially children or pets, are nearby.
4. Remember that the operator or user is responsible for accidents or hazards occurring to other people or their property.

**B. PREPARATION**

1. Do not wear loose-fitting clothing, dangling drawstrings, jewels, or items that could become caught; tie up long hair and keep a safe distance while starting the lawnmower.
2. Turn the engine OFF and let it cool before removing the gas cap.
3. ⚠ **WARNING! DANGER!**
   **Fuel is highly flammable:**
   - Store the fuel in special containers.
   - Refuel only outdoors by using a funnel; never smoke while refueling and/or handling fuel.
   - Add fuel before starting the engine. Never remove the cap of the fuel tank or add fuel while the engine is running or when the engine is hot.
   - If you have spilt some fuel, do not attempt to start the engine but move the machine away from the area of spillage and avoid creating any source of ignition until the fuel has evaporated and fuel vapors have dissipated.
   - Always put the tank and fuel container caps back on and tighten well.
4. Replace faulty silencers and the guard if damaged.

**C. OPERATION**

1. Do not operate the engine in a confined space where dangerous carbon monoxide fumes can collect.
2. Do not use starting fluids or similar products.

3. Do not change the engine governor settings or overspeed the engine.
4. Do not tilt the machine onto its side to prevent fuel leaks from the fuel tank cap.
5. Do not touch the cylinder fins and/or the silencer guard until the engine has cooled down.
6. Stop the engine and disconnect the spark plug cable before checking, cleaning, or servicing the machine or the engine.
7. Do not crank the engine with the spark plug removed.
8. Transport the machine with an empty tank.

**D. MAINTENANCE AND STORAGE**

1. Routine maintenance is essential for safety and for keeping a high-performance level.
2. Do not store the machine with fuel in the tank in an area where the fuel vapors could reach an open flame, a spark, or a strong heat source.
3. Allow the engine to cool before storing it in any enclosure.
4. To reduce the fire hazard, keep the engine, the silencer, and the fuel storage area free of grass, leaves, or excessive grease.
5. If the fuel tank must be drained, this should be done outdoors once the engine has cooled down.
6. For safe operation, never use the engine with either worn or damaged parts. Parts should be replaced and not repaired. Use genuine spare parts. Parts that are not of the same quality can damage the engine and impair your safety.

# 4. COMPONENTS AND CONTROLS

## ENGINE COMPONENTS

1. Oil filler cap with dipstick
2. Oil drain plug
3. Air cleaner cover
4. Fuel shut-off valve
5. Spark plug cap
6. Engine code

⚠ **NOTE:**

**Your engine serial number here: _**

## ACCELERATOR CONTROL

The throttle trigger (generally a lever), fitted to the machine, is connected to the engine by a cable.

Consult the machine's Instructions Manual to identify the throttle trigger and its positions, usually marked by symbols, corresponding to:

**CHOKE** = to be used for starting from cold.

**FAST** = corresponds to maximum revs; to be used when working.

**SLOW** = corresponds to minimum revs.

# 5. WHAT YOU NEED TO KNOW

Engine performance, reliability, and life are influenced by many factors, some external and some strictly associated with the quality of the products used and with the scheduled maintenance. The following information allows a better understanding and use of your engine.

## ENVIRONMENTAL CONDITIONS

The operation of a four-stroke endothermic engine is affected by:

1. Temperature:
   - Working in low temperatures could lead to a difficult cold start.
   - Working in very high temperatures could lead to a difficult hot start due to the evaporation of the fuel either in the carburetor float chamber or in the pump.
   - In any case, the right kind of oil must be used, according to the operating temperatures.
2. Altitude:
   - The higher the altitude (above sea level), the lower the max power developed by an endothermic engine.
   - When there is a considerable increase in altitude, the load on the machine should be reduced and particularly heavy work avoided.

## FUEL

Good quality fuel is important for reliable engine operation.

**A.** Use unleaded gasoline with a minimum of 90 octane.
**B.** Use clean, fresh fuel; purchase fuel in quantities that can be used within 30 days, to prevent
**C.** gum from forming inside the container or the tank.
**D.** Do not use fuel that contains Methanol.
**E.** Do not add either oil or any kind of fuel additive.

## OIL

Always use high-quality oils, choosing their viscosity grade according to the operating temperature.

**A.** Use only detergent oil classified SF-SG.
**B.** Choose the SAE viscosity grade of oil from this chart:
   - from 5 to 35 °C = SAE 30
   - from -15 to+ 5 °C = 5W-30 or l0W-30 (multi-viscosity)
   - from -25 to+ 35 °C = Synthetic oils 5W-30 or lOW-30 (multi-viscosity)
**C.** The use of multi-viscosity oils in hot temperatures will result in higher-than- normal oil consumption; therefore, check oil level more frequently.
**D.** Do not mix oils of different brands and features.
**E.** SAE 30 oil, if used below 5°C, could result in possible engine damage due to inadequate lubrication.
**F.** Oil should be at the "MAX" mark. Do not overfill.
   - Overfilling with oil may cause Smoking, spark plug, or air filter fouling, which will cause hard starting.

### AIR FILTER

The air filter must always be in perfect working order to prevent debris and dust from getting sucked into the engine, reducing the efficiency and life of the machine.

- **A.** Always keep the filtering element free of debris and in perfect working order.
- **B.** If necessary, replace the filtering element with an original spare part. Incompatible filtering elements can impair the efficiency and life of the engine.
- **C.** Never start the engine without mounting the filtering element properly.

### SPARK PLUG

Not all the spark plugs for endothermic engines are the same!

- **A.** Use only spark plugs of the recommended type, with the right heat range.
- **B.** Check the length of the thread, because - if it is too long - it will damage the engine beyond repair.
- **C.** Make sure that the electrodes are clean, and their gap is correct.

## 6. STANDARDS OF USE

### BEFORE EVERY USE

Before every use, perform the following checking procedures in order to ensure regular operation.

### CHECK OIL LEVEL

See the specific chapter (8.1) for the oil to be used.

A. Place engine level.
B. Clean around the oil fill.
C. Unscrew the cap, clean the end of the dipstick, and insert it, as illustrated, without screwing it down.
D. Remove the cap with the dipstick and check the oil level that must be between the "MIN" and "MAX" marks.
E. If oil is required, add oil of the same kind up to the "MAX" mark, being careful not to spill any outside the oil fill.

### CHECK THE AIR CLEANER

The efficiency of the air filter is fundamental to the engine working properly. Do not start the engine if the filtering element is missing or broken.

A. Clean around the filter cover.
B. Remove the cover by unscrewing the two knobs.
C. Check the condition of the filtering element. It must be intact, clean, and in perfect working order; if not, either carry out maintenance or replace it.
D. Put the cover back.

### ADDING FUEL

⚠ **IMPORTANT!**

Do not drip gasoline onto the plastic parts of the motor or the machine to prevent damaging them, and remove all traces of spilt gasoline immediately. The warranty does not cover damage to plastic parts caused by gasoline.

See "Technical Data" chapter (8.1) for the fuel characteristics.
Refueling must be made when the engine is cold, following the instructions contained in the machine's 'Instructions Manual.

## SPARK PLUG CAP

Firmly connect the cable cap to the spark plug, making sure that there are no traces of dirt inside the cap and on the spark plug terminal.

## STARTING THE ENGINE (COLD)

The engine must be started in the way described in the machine's Instruction Manual, always making sure that any device (if present) that could cause the machine to advance or the engine to stop is disengaged.

A. Open the fuel shut-off valve.
B. Move the throttle to "CHOKE".
C. Turn the starter key as described in the machine's instruction manual.

After a few seconds, slowly move the throttle from "**CHOKE**" to either "**FAST**" or "SLOW".

⚠ **NOTE:**
If the engine starts but does not keep running, repeat the above steps with the throttle on "FAST".

## STARTING THE ENGINE (HOT STARTING)

- Follow the whole cold-starting procedure with throttle control in "FAST" position.

## USE OF THE ENGINE IN OPERATION

Maximum revs must be used to optimize the engine's yield and performance by setting the throttle trigger to "FAST".

⚠ **WARNING!**
Keep your hands away from the silencer and the surrounding areas that can become extremely hot. With the engine running, do not get loose-fitting clothing (ties, scarves, etc.) or hair closer to the top part of the engine.

⚠ **IMPORTANT!**
Do not operate on over 20° inclines to prevent the malfunctioning of the engine.

## STOPPING THE ENGINE DURING MOWING

**A.** Move the throttle to "SLOW".
**B.** Allow the engine to run at minimum speed for at least 15-20 seconds.
**C.** Stop the engine following the instructions contained in the machine's Instructions Manual.

## STOPPING THE ENGINE AFTER MOWING

- **A.** Move the throttle to "SLOW".
- **B.** Allow the engine to run at minimum speed for at least 15-20 seconds.
- **C.** Stop the engine following the instructions contained in the machine's Instructions Manual.
- **D.** When the engine is cold, disconnect the spark plug and remove the starter key (if present).
- **E.** Close the fuel shut-off valve.
- **F.** Remove any debris from the engine and especially around the exhaust silencer to reduce the risk of fire.

## CLEANING AND STORAGE

- **A.** Do not spray water or use hydraulic lances to clean the exterior of the engine.
- **B.** Use a compressed air gun (max. 6 bars) for preference, thus preventing debris and dust from penetrating inside.
- **C.** Store the lawnmower (and the engine) in a dry place, sheltered from severe weather conditions and sufficiently ventilated.

## LONG STORAGE (OVER 30 DAYS)

In case the engine has to be stored for a long time (for example, at the end of the season), a few precautions are needed to help the future start-up.

- **A.** To prevent the formation of deposits inside the tank, empty it of fuel by unscrewing the carburetor float chamber plug and collecting all the fuel in a suitable container. At the end of the operation, remember to screw the plug back on and fully tighten it.
- **B.** Remove the spark plug and pour about 3 cl of clean engine oil into the spark plug hole, then, having blocked the hole with a rag, run the starter motor briefly to turn the engine for a few revs and distribute the oil over the inner surface of the cylinder. Finally, replace the spark plug without connecting the cable cap.

# 6. MAINTENANCE

## SAFETY RECOMMENDATIONS

⚠ **WARNING!**

Remove the spark plug cap and read instructions before carrying out any cleaning, repair, or maintenance operation. Wear proper clothing and gloves whenever your hands are at risk. Do not perform maintenance or repair operations without the necessary tools and technical knowledge.

⚠ **IMPORTANT!**

Never get rid of used oil, fuel, or other pollutants in unauthorized places.

## MAINTENANCE SCHEDULE

Follow the hourly or calendar - whichever occurs first - maintenance schedule shown in the following table.

| Operation | After the first 5 hours | Every 5 hours or daily | Every 50 hours or every season | Every 100 hours |
|---|---|---|---|---|
| **Check oil level** | | **X** | | |
| **Change oil** [1)] | **X** | | | **X** |
| **Clean the silencer and engine.** | | **X** | | |
| **Air filter cleaning** [2)] **and check** | | **X** | | |
| **Air filter replacement 2l** | | | **X** | |
| **Check the spark plug.** | | | **X** | |
| **Replace the spark plug.** | | | | **X** |
| **Fuel filter check** [3)] | | | | **X** |

1. Change the oil every 25 hours if the engine is operating under heavy load or in hot weather.
2. Clean the air cleaner more frequently if the machine is operating in dusty areas.
3. To be carried out by a specialized Centre.

## CHANGE OIL

See the specific chapter (8.1) for the oil to be used.

⚠ **WARNING!**

Drain oil while the engine is warm, being careful not to touch the hot engine or the drained oil.

- **A.** Place the machine on a flat surface.
- **B.** Clean the area around the filler cap and unscrew the cap with the dipstick.
- **C.** Provide a suitable container for collecting the oil and unscrew the drain plug.
- **D.** Refit the drain plug and fully tighten it, having made sure that the gasket is in the right position.
- **E.** Fill up with fresh oil.
- **F.** Check that the oil level has reached the "MAX" notch on the dipstick.
- **G.** Close the cap again and clean up any traces of oil that were possibly spilt.

⚠ **NOTE**

The oil capacity is about 1.2 Liters.

⚠ **WARNING!**

- The length of time that gasoline can be left in your fuel tank and carburetor without causing functional problems will vary with such factors as gasoline blend, your storage temperatures, and whether the fuel tank is partially or fully filled. The air in a partially filled fuel tank promotes fuel deterioration. Very warm storage temperatures accelerate fuel deterioration. Gasoline will oxidize and deteriorate in storage. Deteriorated gasoline will cause hard starting, and it leaves gum deposits that clog the fuel system. As a result, if the engine is not used for more than one month, the fuel oil shall be drained thoroughly to prevent deterioration of the fuel in the fuel system and carburetor.
- The failures of the fuel system or engine performance arising from improper storage are beyond the scope of the warranty.

## CLEAN SILENCER AND ENGINE

The silencer must be cleaned when the engine is cold.

- **A.** Use a jet of compressed air to remove any debris and dirt that could cause a fire from the silencer and its protective cover.
- **B.** Make sure that the cooling air intakes are not blocked.
- **C.** Clean the plastic components with a sponge soaked in water and detergent.

## AIR FILTER MAINTENANCE

- **A.** Clean the area around the filter cover.
- **B.** Remove the cover by unscrewing the two knobs.
- **C.** Remove the filtering element.
- **D.** Tap the cartridge on a solid surface and blow it from the inside with compressed air to remove dust and debris.

⚠ **IMPORTANT!**

Do not use water, gasoline, detergent, or any other products to clean the cartridge.

⚠ **IMPORTANT!**

The sponge pre-filter must NEVER be oiled.

**A.** Clean the inside of the housing from dust and debris, making sure to block the inlet duct with a rag to prevent it from entering the engine.

**B.** Remove the rag, install the filtering element in its housing, and refit the cover.

## SPARK PLUG SERVICE

**A.** Remove the spark plug using a spark socket wrench.

**B.** Clean the electrodes with a metal brush and remove any carbonaceous build-up.

**C.** Using a thickness gauge, check for the right gap (0.6 - 0.8 mm) between the electrodes.

**D.** Install the spark plug and tighten with a socket wrench.

Replace the spark plug if the electrodes are burnt or if the porcelain is broken or damaged.

⚠ **WARNING!**

**Fire hazard! Do not check the ignition system with the spark removed.**

⚠ **IMPORTANT!**

**Use only spark plugs of the recommended type.**

## TUNING THE THROTTLE CABLE AND THE CARBURETTOR

Should the engine not reach maximum revs with the throttle trigger set to "FAST", it could be due to the throttle trigger and speed control lever being out of phase or to a carburetion problem.

Go to a specialized Center or contact your Dealer to restore normal operation.

## CARBURETOR MODIFICATION FOR HIGH ALTITUDE OPERATION

At high altitudes, the standard carburetor air-fuel mixture will be too rich. Performance will decrease, and fuel consumption will increase. A very rich mixture will also foul the spark plug and cause hard starting. Operation at an altitude that differs from that at which this engine was certified, for extended periods of time, may increase emissions.

High altitude performance can be improved by specific modifications to the carburetor. If you always operate your engine at altitudes above 5,000 feet (1,500 meters), have your servicing dealer perform these carburetor modifications. This engine, when operated at a high altitude with the carburetor modifications for high altitude use, will meet each emission standard throughout its useful life.

# 7. TOUBLESHOOTING

| PROBLEM | LIKELY CAUSE | SOLUTION |
|---|---|---|
| **A.** Hard starting | • No fuel<br>• Stale fuel or build-ups in the tank<br>• Incorrect starting procedure<br>• Spark plug disconnected<br>• The spark plug is wet, or the spark plug electrodes are dirty or placed inadequately<br>• Air filter clogged<br>• Incorrect oil for the season<br>• Fuel evaporation in the carburetor (vapor lock) due to high temperatures<br>• Fault in carburation<br>• Hard starting | • Check and top up<br>• Empty fuel tank and refill with fresh fuel<br>• Perform the starting procedure correctly<br>• Check that the spark plug cap fits well over the plug terminals<br>• Check<br>• Check and clean<br>• Replace with proper oil<br>• Wait for a few minutes, then start again<br>• Contact a Licensed Service Centre<br>• Contact a Licensed Service Centre |
| **B.** Inconsistent working | • Dirty electrodes or incorrect gap<br>• The spark plug cap is inserted incorrectly<br>• Air filter clogged<br>• Throttle trigger in "CHOKE" position<br>• Fault in carburation<br>• Fault in ignition | • Check<br>• Check that the cap is fitted correctly<br>• Check and clean<br>• Move the lever to the "FAST" position<br>• Contact a Licensed Service Centre<br>• Contact a Licensed Service Centre |
| **C.** Loss of power whilst operating | • Air filter clogged<br>• Fault in carburation<br>• Governor out of phase with respect to the accelerator | • Check and clean<br>• Contact a Licensed Service Centre<br>• Adjust the cable |

# TECHNICAL SPECIFICATIONS

| | | |
|---|---|---|
| Fuel | Unleaded gasoline, minimum 90 octane | |
| Engine oil | From 5 to 35 °C | SAE 30 |
| Engine oil | From -15 to +5 °C | 5W-30 or 10W-30 |
| Engine oil | From -25 to +35 °C | Synthetic 5W-30 or 10W-30 |
| Oil capacity | 1.6 liter | |
| Spark plug | F7RTC or equivalent | |
| Spark plug gap | 0.6- 0.8 mm | |