HONDA

Owner's Manual

GENERATOR

EU7000iS

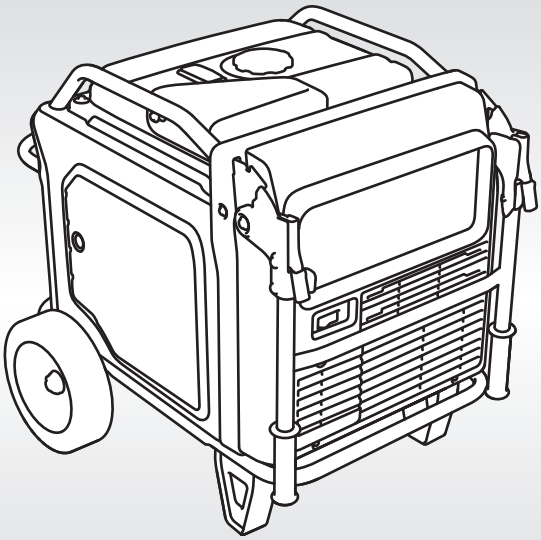

See page 14 for instructions on assembling your generator.
See page 19 for Initial Use Instructions.

© 2025 Honda Motor Co., Ltd. -All Rights Reserved

⚠ WARNING: ⚠

The engine exhaust from this product contains chemicals known to the State of California to cause cancer, birth defects or other reproductive harm.

⚠ WARNING

Exhaust contains poisonous carbon monoxide gas that can build up to dangerous levels in enclosed or partly enclosed areas.

Breathing carbon monoxide can cause unconsciousness or death.

Never run this product's engine in an enclosed, or even partly enclosed area.

Keep this owner's manual handy so that you can refer to it any time.
This owner's manual is considered a permanent part of the generator and should remain with the generator if resold.

The information and specifications included in this publication were in effect at the time of approval for printing. Honda Motor Co., Ltd. reserves the right, however, to discontinue or change specifications or design at any time without notice and without incurring any obligation whatsoever.

The illustration may vary according to the type.

QUICK REFERENCE INFORMATION

Fuel	Type	Regular unleaded gasoline with an ethanol content of no more than 10% and a pump octane rating of 86 or higher (see page 23)
Engine Oil	Type	SAE 10W-30, API SJ or later (or equivalent), for general use (see page 20)
Spark Plug	Type	NGK: BPR6ES
	Electrode Gap	0.028–0.031 in (0.7–0.8 mm)
Maintenance	Before each use	Check engine oil level. Check air cleaner. Check GFCI operation.
	First 20 hours	Change engine oil.
	Subsequent	See "MAINTENANCE SCHEDULE" (see page 75)

INTRODUCTION

Thank you for purchasing a Honda generator.

We would like to help you get the best results from your new generator and to operate it safely. This manual contains the information on how to do that; please read it carefully.

We suggest you read the "Distributor's Limited Warranty" (see page 109) to fully understand its coverage and your responsibilities of ownership.

When your generator needs scheduled maintenance, keep in mind that your Honda servicing dealer is specially trained in servicing Honda generators and is supported by the parts and service divisions of American Honda. Your Honda servicing dealer is dedicated to your satisfaction and will be pleased to answer your questions and concerns.

INTRODUCTION

A FEW WORDS ABOUT SAFETY

Your safety and the safety of others are very important.

We have provided important safety messages in this manual and on the generator. This information alerts you to potential hazards that could hurt you or others. Please read these messages carefully.

Of course, it is not practical or possible to warn you about all the hazards associated with operating or maintaining a generator. You must use your own good judgment.

You will find important safety information in a variety of forms:

- **Safety Labels** — on the generator.
- **Instructions** — how to use this generator correctly and safely.
- **Safety Headings** — such as *IMPORTANT SAFETY INFORMATION*.
- **Safety Messages** — preceded by a safety alert symbol ⚠ and one of three signal words, DANGER, WARNING, or CAUTION.

  These signal words mean:

⚠ DANGER You WILL be KILLED or SERIOUSLY HURT if you do not follow instructions.

⚠ WARNING You CAN be KILLED or SERIOUSLY HURT if you do not follow instructions.

⚠ CAUTION You CAN be HURT if you do not follow instructions.

This entire book is filled with important safety information - please read it carefully.

DAMAGE PREVENTION MESSAGES

In addition to the above, you will find information preceded by a NOTICE symbol. That information is intended to help you avoid damage to your generator, other property, or the environment.

CONTENTS

INTRODUCTION 1

GENERATOR SAFETY 7
IMPORTANT SAFETY INFORMATION 7
Operator Responsibility 7
Carbon Monoxide Hazards 8
Electric Shock Hazards 9
Fire and Burn Hazards 9
Refuel With Care 10
Vehicles and Transportation Hazards 10
SAFETY LABEL LOCATIONS 11

ASSEMBLY 14
SAFETY 14
The Importance of Proper Assembly 14
ASSEMBLY 15
Unpacking 15
Loose Parts 15
Wheel Kit Installation 16
Battery 17

INITIAL USE INSTRUCTIONS 19
ENGINE OIL 19
ENGINE OIL RECOMMENDATIONS 20
FUEL 21
FUEL RECOMMENDATIONS 23

CONTROLS & FEATURES 24
COMPONENT & CONTROL LOCATIONS 24
CONTROLS 26
MAIN Switch 26
ENGINE START Button 26
Starter Grip 27
Eco Throttle® Switch 27
CO-MINDER® (CO Shut-off System) 28
Parallel Operation Outlets 30
Voltage Selector Switch 30
AC Circuit Protectors 31
Ground Fault Circuit Interrupter (GFCI) Receptacle 32
Folding Handle 33
Maintenance Covers 34
FEATURES 35
Ground Terminal 35

CONTENTS

OUTPUT Indicator 36
OVERLOAD ALARM (Indicator) 36
OIL ALERT®/CHECK Indicator 37
i-Monitor™ 38
Fuel Gauge (AN1 type only) 43
Bluetooth® Function 44
Smartphone application 44

BEFORE OPERATION 45
ARE YOU READY TO GET STARTED? 45
Knowledge 45
IS YOUR GENERATOR READY TO GO? 45
Check the Engine 46
Check the GFCI 46
Check the Battery Voltage 46
Battery Maintenance Cover and Wheel Kit 47
AC Appliance and Power Cord 48
ENGINE OIL LEVEL CHECK 49
AIR FILTER CHECK 50
SAFE OPERATING PRECAUTIONS 51

OPERATION 52
STARTING THE ENGINE 52
STOPPING THE ENGINE 55
STARTING AND STOPPING THE ENGINE with *Bluetooth*® ENABLED SMARTPHONE 56
HOW TO RESTART WHEN STOPPED BY CO-MINDER® (CO SHUT-OFF SYSTEM) 56
GFCI OPERATION CHECK 57
AC OPERATION 60
AC Applications 62
AC Receptacle Selection 63
Power Producing Circuits 63
Voltage Selector Switch 64
AC PARALLEL OPERATION 65
AC Parallel Operation Applications 67
ECO THROTTLE® SYSTEM 70
STANDBY POWER 71
Connections to a Building's Electrical System 71
System Ground 71
Special Requirements 72

SERVICING YOUR GENERATOR 73
THE IMPORTANCE OF MAINTENANCE 73
MAINTENANCE SAFETY 74
Safety Precautions 74
MAINTENANCE SCHEDULE 75
ENGINE OIL CHANGE 76
AIR CLEANER SERVICE 78
Foam Air Filter Cleaning 78
SPARK PLUG SERVICE 79
SPARK ARRESTER SERVICE 81
BATTERY SERVICE 82
Emergency Procedures 82
Battery Removal 83
Battery Charging 85
Battery Installation 85
FUSE 86

STORAGE 87
STORAGE PREPARATION 87
Cleaning 87
Fuel 87
Engine Oil 90
Engine Cylinder 90
Battery 90
STORAGE PRECAUTIONS 91
REMOVAL FROM STORAGE 91

TRANSPORTING 92

TAKING CARE OF UNEXPECTED PROBLEMS 93
ENGINE WILL NOT START 93
ENGINE LACKS POWER 94
NO POWER AT THE AC RECEPTACLES 94
ENGINE AUTOMATICALLY STOP AND THE CO ALARM INDICATOR FLASHING 95
ENGINE AUTOMATICALLY STOP AND THE FAULT/CO SENSOR LIFE INDICATOR FLASHING 95
FAULT/CO SENSOR LIFE INDICATOR FLASHING WHEN RUNNING THE ENGINE 95

TECHNICAL INFORMATION 96
SERIAL NUMBER AND TYPE LOCATION 96
EMISSION CONTROL SYSTEM INFORMATION 97

CONTENTS

Source of Emissions 97
The U.S. and California Clean Air Acts, and Environment and Climate Change Canada (ECCC) 97
Tampering and Altering 98
Problems That May Affect Emissions 98
Replacement Parts 99
Maintenance 99
Air Index 100
Emission Control Information 100
SPECIFICATIONS 101
WIRING DIAGRAM 103

CONSUMER INFORMATION 107
DEALER LOCATOR INFORMATION 107
Honda PUBLICATIONS 107
CUSTOMER SERVICE INFORMATION 108
Distributor's Limited Warranty 109
Emission Control System Warranty 114
REGISTRATION 119
Please Register Your Generator 119

OPTIONAL PARTS 120
HANGER KIT 120

REFERENCE INFORMATION 121

INDEX 122

QUICK REFERENCE INFORMATION ..... inside back cover

GENERATOR SAFETY

IMPORTANT SAFETY INFORMATION

Honda generators are designed for use with electrical equipment that has suitable power requirements. Other uses can result in injury to the operator or damage to the generator and other property.

Most injuries or property damage can be prevented if you follow all instructions in this manual and on the generator. The most common hazards are discussed below, along with the best way to protect yourself and others.

Operator Responsibility

- Never attempt to modify the generator. It can cause an accident as well as damage to the generator and appliances.
- Know how to stop the generator quickly in case of emergency.
- Understand the use of all generator controls, output receptacles, and connections.
- Be sure that anyone who operates the generator receives proper instruction.
- Protect children by keeping them at a safe distance from the generator.
- Obey all applicable laws and regulations where the generator is used.

GENERATOR SAFETY

Carbon Monoxide Hazards
A generator's exhaust contains toxic carbon monoxide, which you cannot see or smell. Breathing carbon monoxide can KILL YOU IN MINUTES. To avoid carbon monoxide poisoning, follow these instructions when operating a generator:

- Only run a generator OUTSIDE, far away from windows, doors, and vents with engine exhaust directed away from occupied structures.
- Never operate a generator inside a house, garage, basement, crawl space, any type of vehicle, trailer, or boat, or any enclosed or partly enclosed space.
- Never operate a generator near open doors, windows, vents, or hatches.
- Get fresh air and seek medical attention immediately if you suspect you have inhaled carbon monoxide.

Early symptoms of carbon monoxide exposure include headache, fatigue, shortness of breath, nausea, and dizziness. Continued exposure to carbon monoxide can cause loss of muscular coordination, loss of consciousness, and then death.

To alert you to potentially dangerous levels of carbon monoxide coming from a generator operating outside or from other sources, install battery operated carbon monoxide alarms or plug-in carbon monoxide alarms with battery back-up on every level of your home, outside sleeping areas, inside any type of vehicle, trailer, or boat in accordance with the alarm's instructions.

CO-MINDER®:
This generator is equipped with a CO-MINDER® system that automatically stops the engine before the surrounding carbon monoxide concentration exceeds a certain concentration.
- Do not modify the CO-MINDER.
- The CO-MINDER cannot prevent all danger associated with or caused by carbon monoxide. Pay careful attention to the location of the generator (see page 28).

Electric Shock Hazards
The generator produces enough electric power to cause a serious shock or electrocution if misused.

- Do not use in wet conditions. Keep the generator dry.
  - Do not use in the rain or snow.
  - Do not use near pool or a sprinkler system.
  - Do not use when your hands are wet.

- If the generator is stored outdoors, unprotected from the weather, check all of the electrical components on the control panel before each use. Moisture or ice can cause a malfunction or short circuit in electrical components that could result in electrocution.

- Do not connect to a building's electrical system unless an isolation switch has been installed by a qualified electrician.

- For parallel operation, use only a Honda approved parallel kit (optional equipment) when connecting one EU7000iS to another EU7000iS generator.

- Never connect different generator models.

Fire and Burn Hazards
- The exhaust system gets hot enough to ignite some materials.
  - Keep the generator at least 3 feet (1 meter) away from buildings and any type of vehicle, trailer, boat, or other equipment during operation.
  - Do not enclose the generator in any structure.
  - Keep flammable materials away from the generator.
  - Generators with standard equipment transport wheels must not be operated with the wheels and/or stands removed.
  - Do not block intake or exhaust vents, hoses, ports, or restrict air into or away from generator.
  - Do not add, remove, or modify covers, panels, cowlings, or straps.

- The muffler becomes very hot during operation and remains hot for a while after stopping the engine. Be careful not to touch the muffler while it is hot. Let the engine cool before storing the generator.

- Do not pour the water directly on the generator to put out the fire when it occurs. Use an appropriate fire extinguisher specially designed for electric fire or oil fire.

GENERATOR SAFETY

Refuel With Care
Gasoline is highly flammable, and gasoline vapor can explode.

- Do not refuel during operation.
- Allow the engine to cool if it has been in operation.
- Refuel only outdoors in a well-ventilated area and on a level surface.
- Never smoke near gasoline, and keep other flames and sparks away.
- Do not overfill the fuel tank.
- Make sure that any spilled fuel has been wiped up and cleaned before starting the engine.
- Always store gasoline in an approved container.

Vehicles and Transportation Hazards
- Do not operate the generator while it is being transported or while it is mounted to any type of vehicle, trailer, or boat.
- Do not operate the generator when it is in a storage, cargo, or security enclosure, including any RV generator bay.
- Always completely remove the generator from the vehicle, RV, truck, trailer, boat, other equipment or structure during operation.
- The generator must remain stationary while in operation.

SAFETY LABEL LOCATIONS

These labels warn you of potential hazards that can cause serious injury. Read them carefully.
If a label comes off or becomes hard to read, contact your servicing dealer for a replacement.

AN1 type

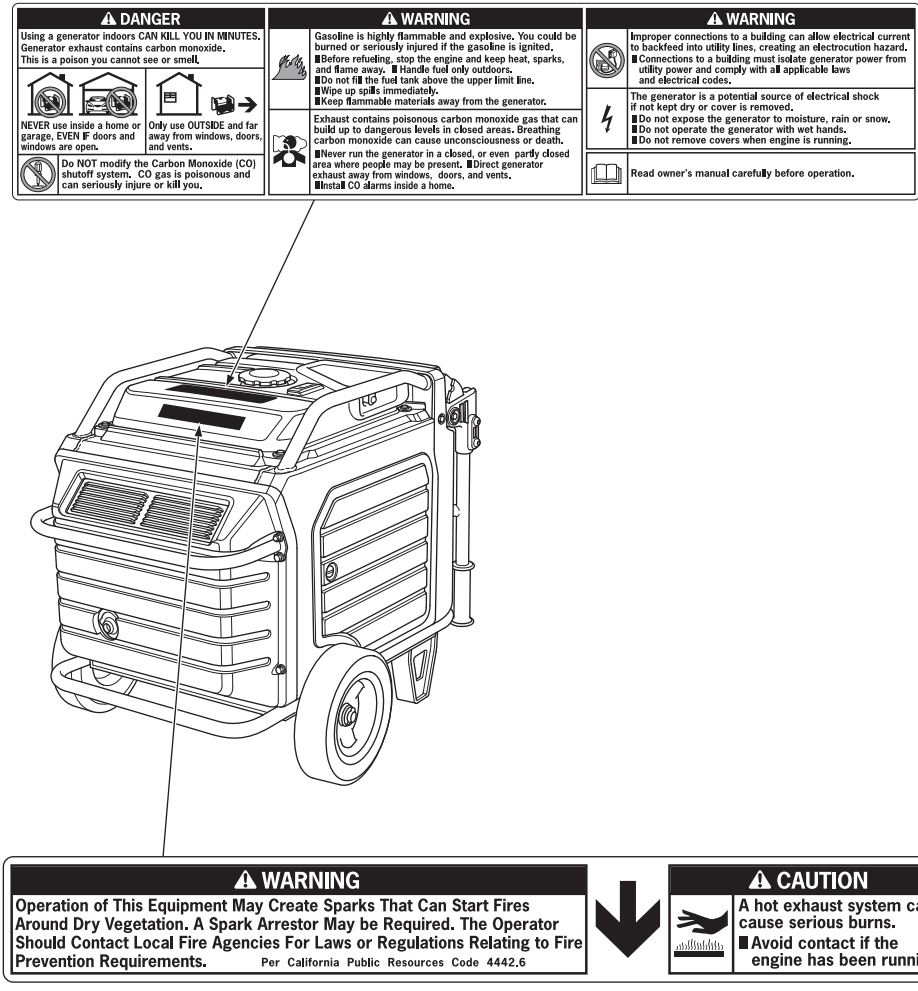

GENERATOR SAFETY

AC1 type

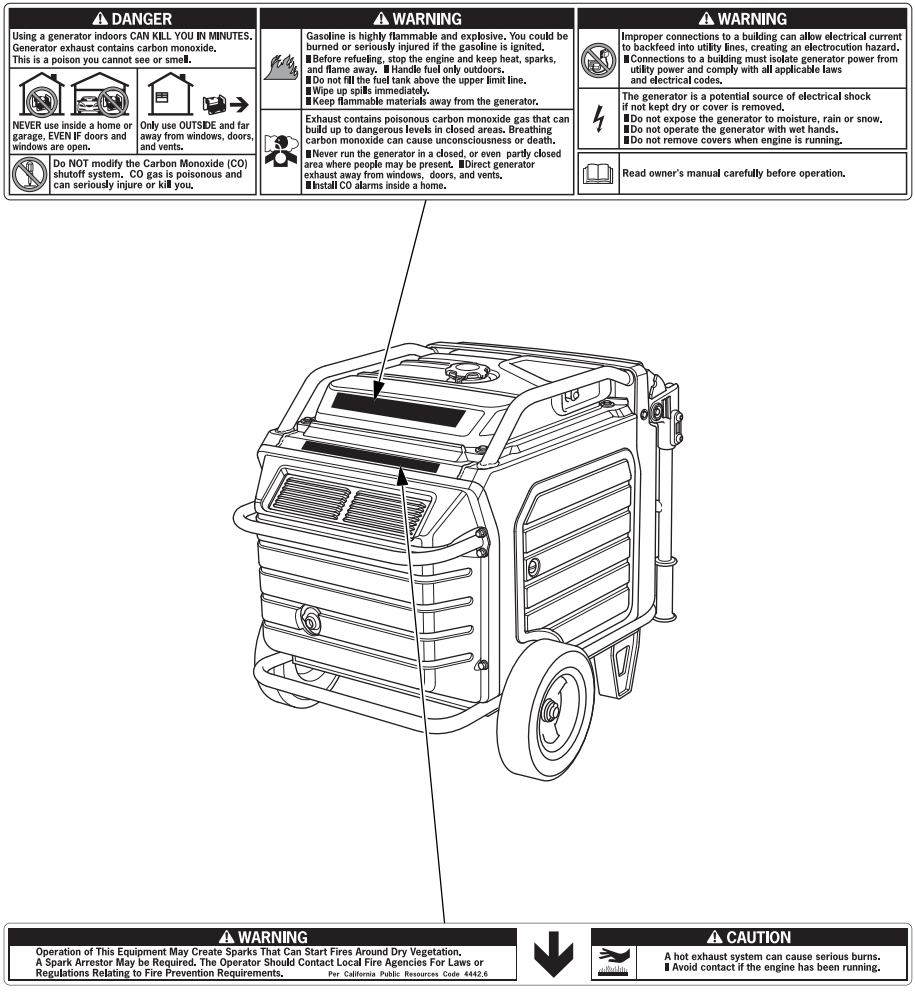

AN1 type



AC1 type



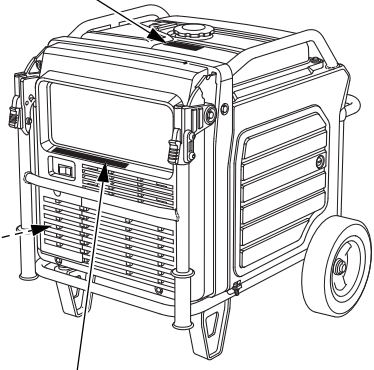

ALL types

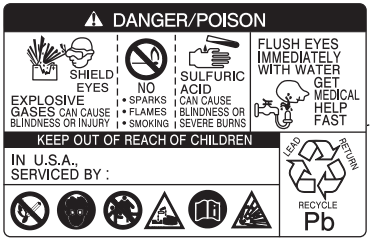

ALL types

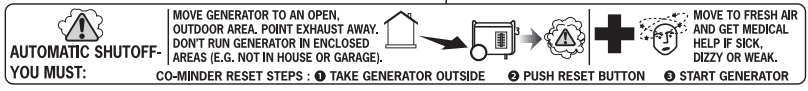

ASSEMBLY

SAFETY

The Importance of Proper Assembly
Proper assembly is essential to operator safety and the reliability of the machine.

> **⚠ WARNING**
>
> Improper assembly can cause an unsafe condition.
>
> Failure to properly follow assembly procedures can lead to serious injury or death.
>
> Follow the procedures and precautions in this owner's manual carefully.

We cannot warn you of every conceivable hazard that can arise in performing this assembly. Only you can decide whether or not you should perform a given task.

ASSEMBLY

Unpacking

1. Remove the generator and loose parts box from the carton.

2. Compare the loose parts with the inventory list below.

Tools Required: 12 mm wrench, 10 mm wrench or Phillips head screwdriver for battery connections, pliers (not included)

NOTICE

Do not add fuel or oil before tipping the generator. Oil or fuel may damage the engine or your property.

Loose Parts

Check all loose parts against the following list.

Ref. No.	Description	Qty.
1	Wheel	2
2	Axle	1
3	Stand	2
4	20 mm Washer	2
5	4.0×28 mm Cotter pin	2
6	8×20 mm Flange bolt	8

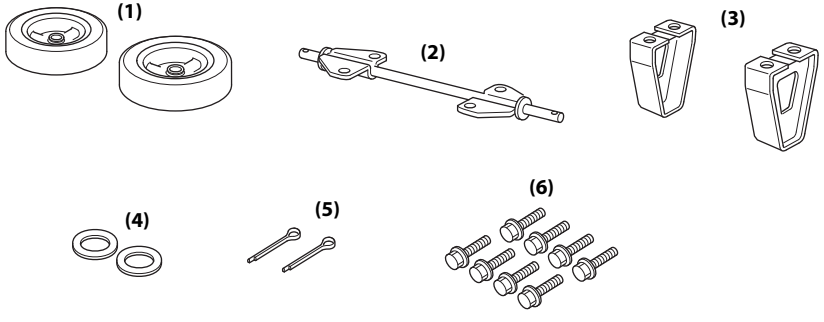

Wheel Kit Installation

Do not operate the generator without the wheel kit installed. The wheel kit provides air space between the ground and the generator air intake.

⚠ WARNING

Operating the generator without the wheel kit installed can pinch or block air vent tubes or fuel drain tubes, causing fuel to spill on the ground or, inside or around the generator.

Spilled fuel can cause a fire and you can be burned or seriously injured.

Always operate the generator with the wheel kit installed and do not modify any part of the generator, including air, drain and fuel tubes, or covers, panels and air intakes.

NOTICE

Generators with standard equipment transport wheels must be operated with the wheels and stands installed to provide air space between the ground and the generator air intake. This prevents fuel, dirt, or debris from being drawn into the generator air intake, which can cause generator or engine damage.

1. Install the two stands on the under frame by tightening four 8×20 mm flange bolts.

2. Install the two wheels on the axle by tightening the 20 mm washers and 4.0×28 mm cotter pins. After installing the split pins, bend the pins to ensure that the wheels are secured to the axle.

3. Install the axle assembly on the generator by tightening four 8×20 mm flange bolts. Make sure that the axle's direction is correct as it is shown in the illustration.

   Torque: 19.5 lbf·ft (26.5 N·m, 2.7 kgf·m)

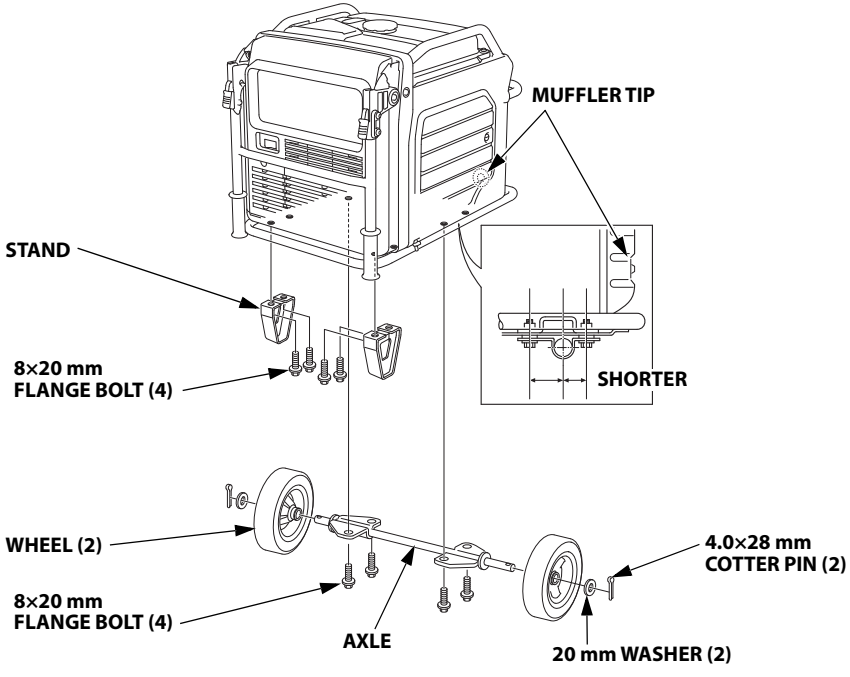

Battery

WARNING: Battery posts, terminals, and related accessories contain lead and lead compounds. **Wash your hands after handling.**

The battery is disconnected and strapped into the battery tray for shipment.

1. Remove the battery maintenance cover (see page 83).

2. Remove the battery strap from the bottom hook, and then remove the battery.

3. Charge the battery properly (see page 85).
   Pull out the harness and reinstall the battery.

4. Remove the protective cover from the battery positive (+) terminal, and connect the positive (+) cable to the battery positive (+) terminal. Make sure to cover the terminal with the battery boot.

5. Connect the negative (–) cable to the battery negative (–) terminal.

6. Secure the battery by hooking the strap onto the bottom hook of the generator.

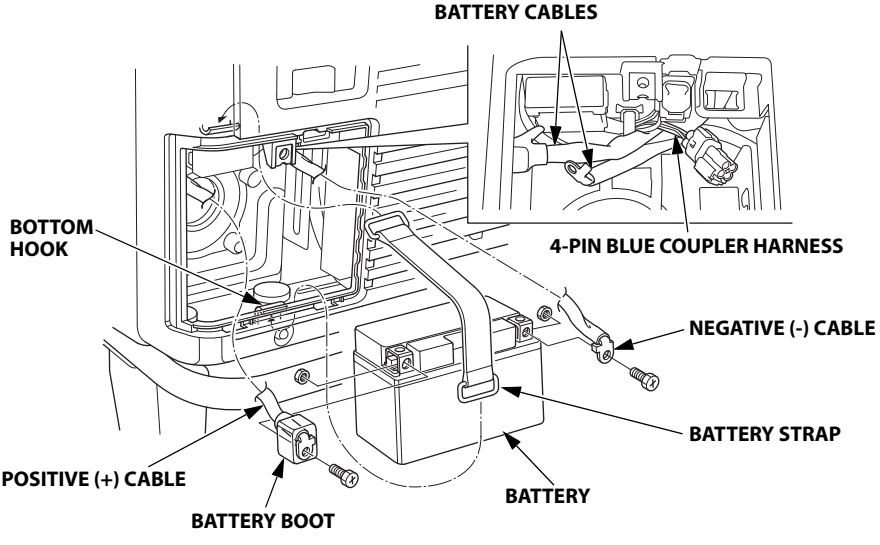

7. Install the battery maintenance cover in the reverse order of removal (see page 83).
   Never operate the generator without the battery maintenance cover in place, as poor engine and generator performance will result.

INITIAL USE INSTRUCTIONS

ENGINE OIL

The generator is shipped **WITHOUT OIL** in the engine.

1. Place the generator on a level surface.
2. Open the right maintenance cover by turning its latch counterclockwise.
3. Remove the oil filler cap by turning it counterclockwise.

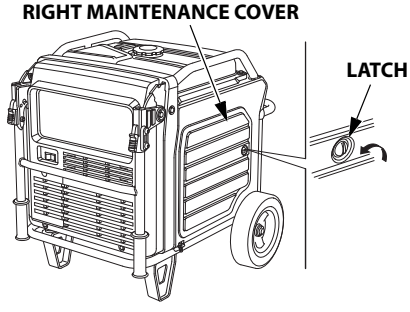

4. Add enough oil to bring the oil level to the upper limit of the oil filler neck. SAE10W-30 API service category SJ or later (or equivalent) is recommended for general use; for additional recommendations (see page 20).

   Maximum oil capacity: 1.2 US qt (1.1 L)

   Do not overfill the engine with oil. If the engine is overfilled, the excess oil may be transferred to the air cleaner housing and air filter.

5. Reinstall the oil filler cap securely.
6. Close the right maintenance cover by turning its latch clockwise.

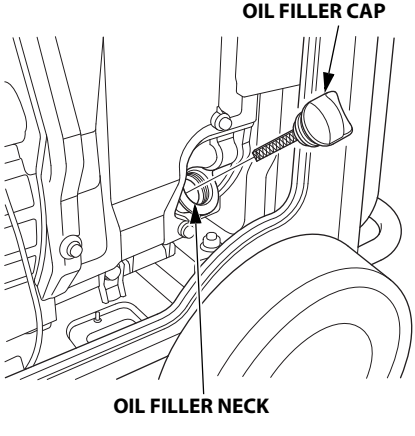

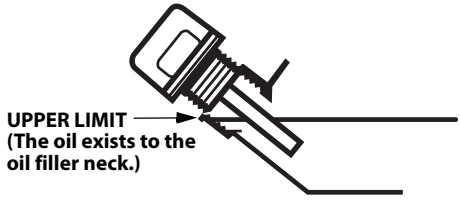

INITIAL USE INSTRUCTIONS

ENGINE OIL RECOMMENDATIONS

Oil is a major factor affecting performance and service life. Use 4-stroke automotive detergent oil.

SAE 10W–30 is recommended for general use. Other viscosities shown in the chart may be used when the average temperature in your area is within the recommended range.

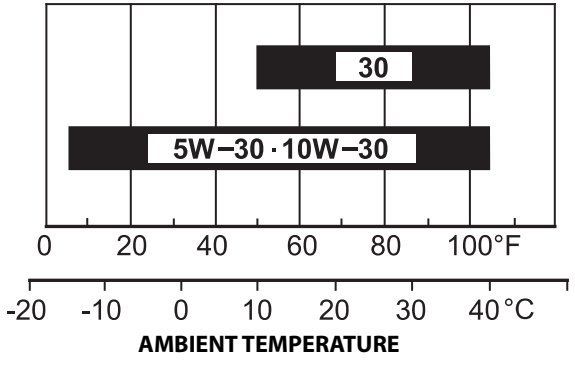

Read the instructions on the oil container before use.

The SAE oil viscosity and service category are in the API label on the oil container. Honda recommends that you use API service category SJ or later (or equivalent) oil.

FUEL

Add fuel to the generator in a well-ventilated area. Fuel only outdoors. Keep gasoline away from appliances, such as pilot lights, barbecues, electric appliances, power tools, etc. Spilled fuel is not only a fire hazard, it causes environmental damage. Fuel carefully to avoid spilling fuel. Wipe up spills immediately. Do not fill the fuel tank above the upper level mark (red) on the fuel strainer. After fueling, reinstall the fuel tank cap securely.

When appropriate, with the engine stopped, check the fuel gauge for the fuel level. If the fuel level is low, wait for the generator to cool off and refill the fuel tank.

This engine is certified to operate on unleaded gasoline with a pump octane rating of 86 or higher. Refer to "FUEL RECOMMENDATIONS" (see page 23) for additional fuel recommendations.

⚠ WARNING

Gasoline is highly flammable and explosive.

You can be burned or seriously injured when handling fuel.

- Stop the engine and let it cool before handling fuel.
- Keep heat, sparks, and flame away.
- Handle fuel only outdoors.
- Keep away from your vehicle.
- Wipe up spills immediately.

NOTICE

Fuel can damage paint and plastic. Be careful not to spill fuel when filling your fuel tank. Damage caused by spilled fuel is not covered under the Distributor's Limited Warranty (US) / Distributor's warranty (C.A.).

Remaining fuel amount can be confirmed with the fuel gauge (AN1 type, see page 43) / i-Monitor display (AC1 type, see page 41).

INITIAL USE INSTRUCTIONS

1. Make sure the MAIN switch is in the OFF position.
2. Remove the fuel tank cap by turning it counterclockwise.
3. Fuel carefully to avoid spilling fuel. Do not fill the fuel tank above the upper level mark (red) on the fuel strainer or fuel may flow into the charcoal canister causing fuel spillage.

AN1 type

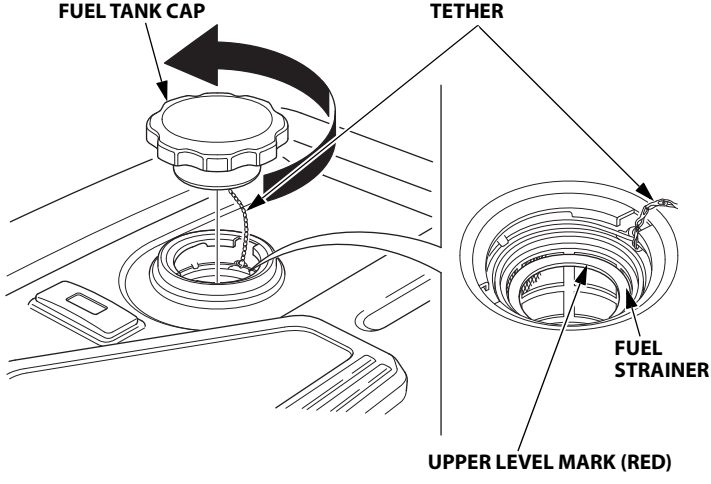

AC1 type

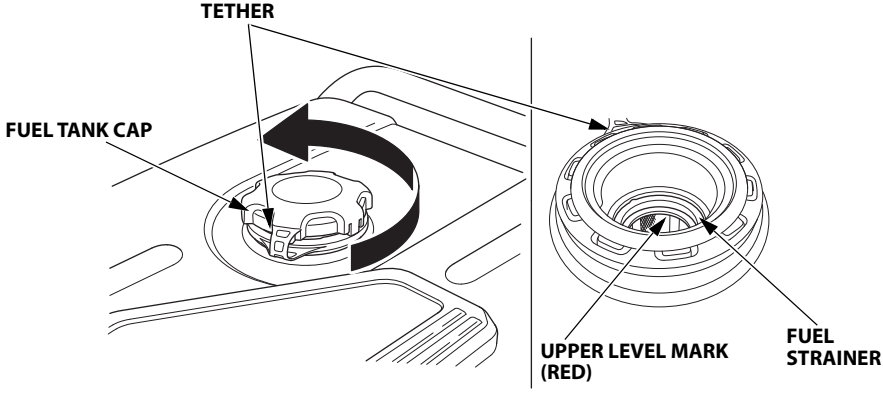

4. After fueling, reinstall the fuel tank cap securely. (AN1 type) / After refueling, reinstall the fuel tank cap until it clicks. (AC1 type)

NOTICE

Fuel can damage paint and plastic. Be careful not to spill fuel when filling your fuel tank. Damage caused by spilled fuel is not covered under the Distributor's Limited Warranty (US) / Distributor's warranty (C.A.).

Move the generator at least 10 feet (3 meters) away from the fueling source and site before starting the engine.

FUEL RECOMMENDATIONS

This engine is certified to operate on regular unleaded gasoline with a pump octane rating of 86 or higher.

Use unleaded gasoline only, or the catalyzer will lose its effectiveness and negatively affect exhaust emissions.

Never use gasoline that is stale, contaminated, or mixed with oil. Avoid getting dirt or water in the fuel tank.

You may use regular unleaded gasoline containing no more than 10% ethanol (E10) or 5% methanol by volume. In addition, methanol must contain cosolvents and corrosion inhibitors.

Use of fuels with content of ethanol or methanol greater than shown above may cause starting and/or performance problems. It may also damage metal, rubber, and plastic parts of the fuel system.

Engine damage or performance problems that result from using a fuel with percentages of ethanol or methanol greater than shown above and leaded gasoline are not covered under the Distributor Limited Warranty (US) / Distributor's warranty (C.A.).

If your equipment will be used on an infrequent basis, refer to the fuel section of "STORAGE" chapter (see page 87) for additional information regarding fuel deterioration.

CONTROLS & FEATURES

COMPONENT & CONTROL LOCATIONS

Use the illustrations on these pages to locate and identify the most frequently used controls.

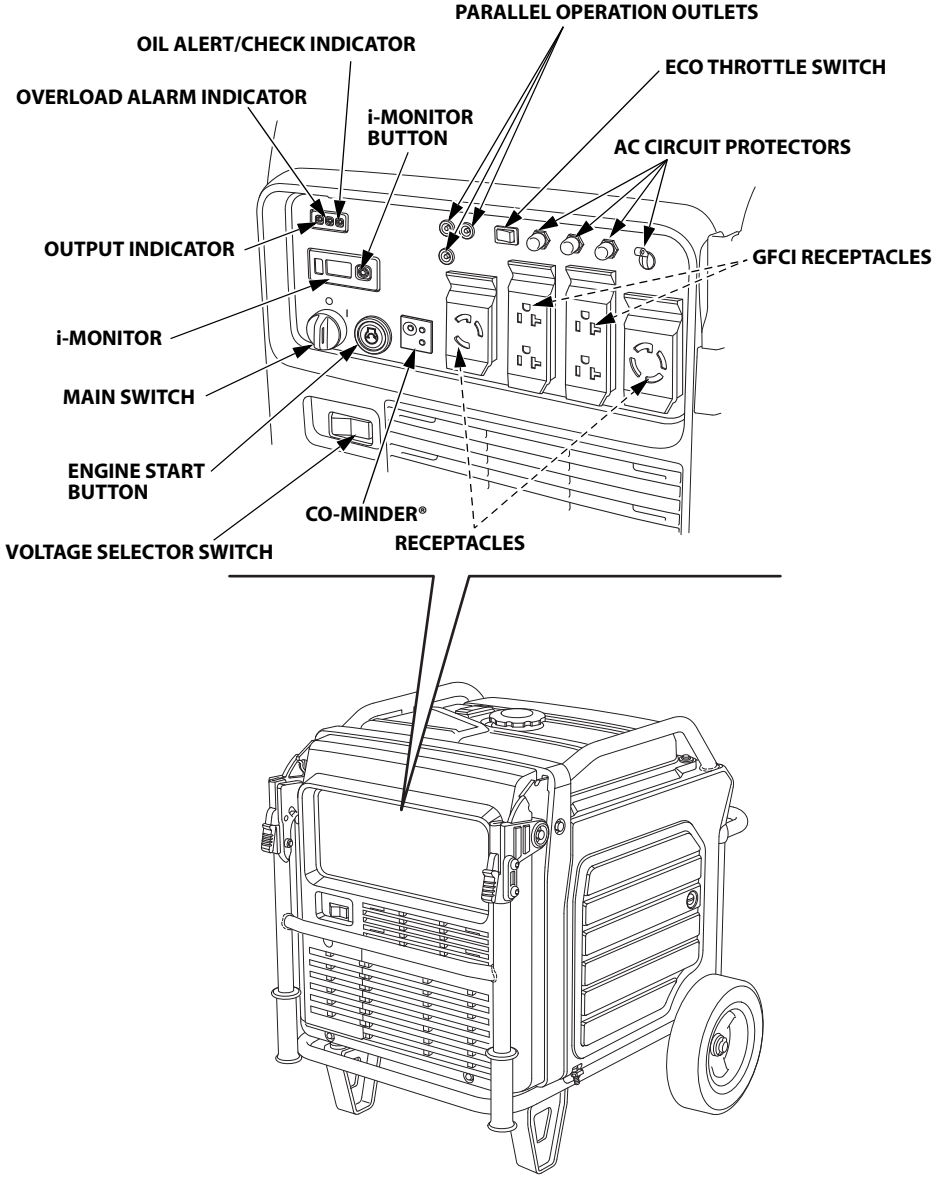

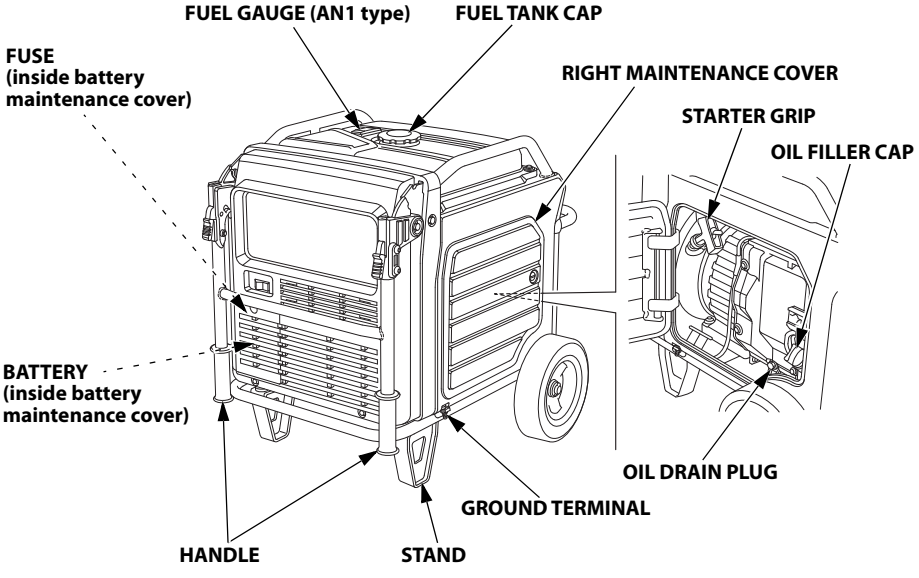
FUEL GAUGE (AN1 type)
FUEL TANK CAP
FUSE
(inside battery
maintenance cover)
RIGHT MAINTENANCE COVER
STARTER GRIP
OIL FILLER CAP
BATTERY
(inside battery
maintenance cover)
OIL DRAIN PLUG
GROUND TERMINAL
HANDLE
STAND

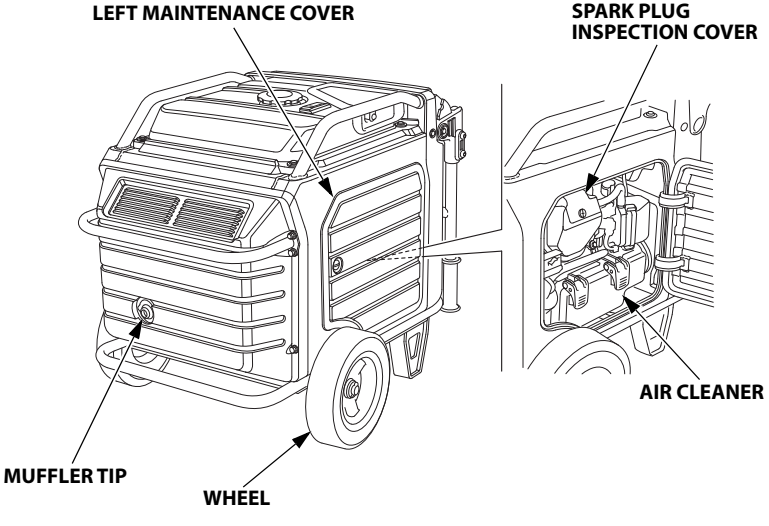
LEFT MAINTENANCE COVER
SPARK PLUG
INSPECTION COVER
AIR CLEANER
MUFFLER TIP
WHEEL

CONTROLS

MAIN Switch

The MAIN switch controls the ignition system.

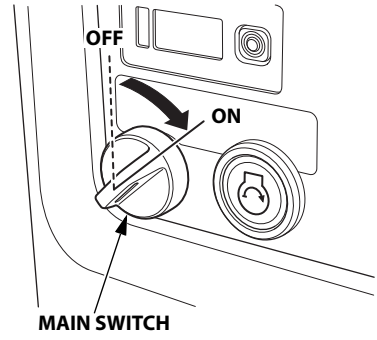

OFF – Stops the engine. The main switch key can be removed/inserted.

ON – Running position, and for starting with the ENGINE START button or recoil starter.

If the MAIN switch is left in the ON position without starting the engine within 30 minutes, the ENGINE START button will not function.

- To restart the engine using the ENGINE START button, the MAIN switch must be turned to the OFF position, and then back to the ON position.
- If the MAIN switch is left on longer than 30 minutes, the engine will still start using a *Bluetooth*® enabled smartphone.

ENGINE START Button

With the MAIN switch in the ON position, press and release the ENGINE START button to start the engine.

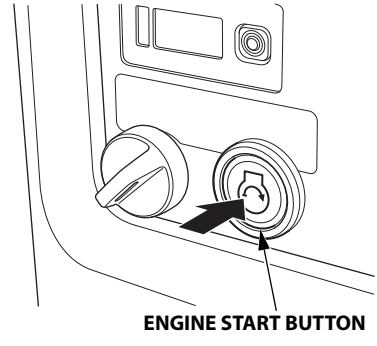

Starter Grip

Used when the battery voltage is too low to turn the starter motor. Pulling the starter grip operates the recoil starter to start the engine.

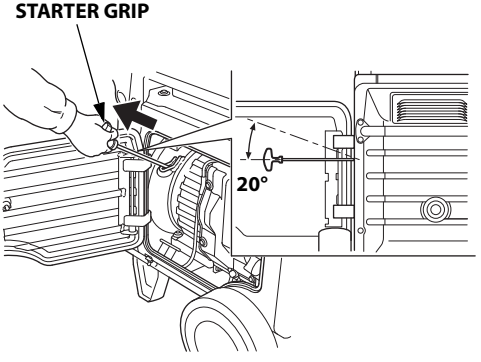

NOTICE

- *Do not exceed 20 degrees from horizontal when pulling the starter grip or the starter rope may become damaged.*
- *Do not allow the starter grip to snap back against the engine. Return it gently to prevent damage to the starter.*
- *Do not let the starter rope rub against the generator body, or the rope will wear out prematurely.*

Eco Throttle® Switch

The Eco Throttle system automatically reduces engine speed when all loads are turned off or disconnected. When appliances are turned on or reconnected, the engine returns to the proper speed to power the electrical load.

If high electrical loads are connected simultaneously, turn the Eco Throttle switch to the OFF position to reduce voltage changes.

ON – Recommended to minimize fuel consumption and further reduce noise levels when a reduced load or no load is applied to the generator.

OFF – The Eco Throttle system does not operate. Generator operates at full speed.

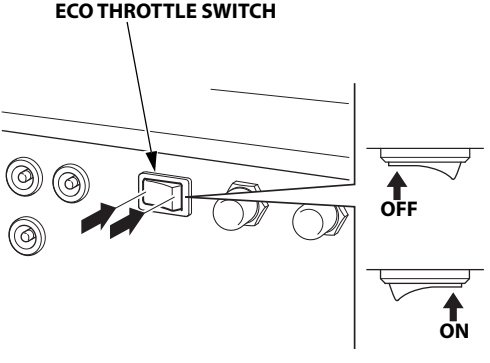

CO-MINDER® (CO Shut-off System)
CO-MINDER® is a system that automatically stops the engine before the surrounding carbon monoxide concentration exceeds a certain level.
If the CO-MINDER detects a high carbon monoxide concentration, the engine will stop and the CO ALARM indicator will flash for about five minutes.

Continuously using the generator in areas with high concentrations of carbon monoxide can cause serious health hazards due to carbon monoxide poisoning (see page 8). If you are in the same area as the generator, evacuate the area immediately. Get fresh air and seek medical attention immediately if you feel sick or suspect you have inhaled carbon monoxide. Ventilate the area or space where the generator is located.

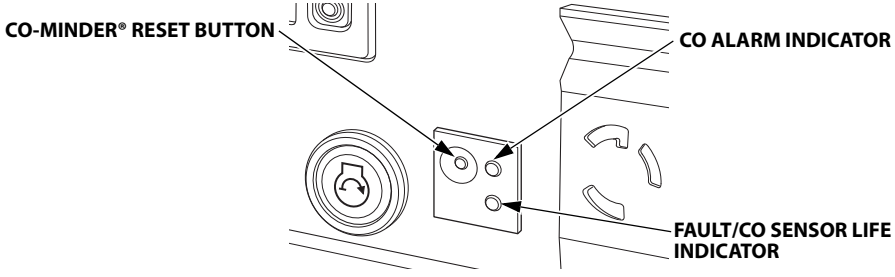

If the engine is stopped by the CO-MINDER system, change the operating location of the generator.

- Do not operate the generator in an enclosed or partly enclosed area such as a garage.
- Do not enclose or cover the generator with boards or a tent, even when it is outside and away from a building.
- Place the generator so that the muffler is pointed in the same direction as the wind is blowing and the exhaust is directed away from buildings, other structures, or vehicles (see page 68).
- Avoid placing the generator near devices that emit carbon monoxide, such as another generator.
- When operating generators in parallel operation, place the generators so that the exhaust from one generator is not directed onto the other generator (see page 68).

RESTARTING THE ENGINE
When the engine is stopped automatically by CO-MINDER®, press the CO-MINDER reset button to restart the engine.
If the engine is restarted without pressing the CO-MINDER reset button, the engine will automatically stop immediately after restarting and the CO ALARM indicator will flash for approximately five minutes.
Resetting the CO-MINDER is possible only after the CO ALARM indicator is turned off.

CO-MINDER® MALFUNCTION DETECTION
If the CO-MINDER® detects a system malfunction, the engine will stop automatically and the FAULT/CO SENSOR LIFE indicator will flash for approximately five minutes. Press the CO-MINDER reset button to turn off the FAULT/CO SENSOR LIFE indicator. If the engine will not remain running after attempting to restart it and the FAULT/CO SENSOR LIFE indicator comes on again, there may be a system malfunction. If this occurs, do not attempt to restart the generator more than two times. If the CO-MINDER system is malfunctioning, it cannot warn you of potential high concentrations of carbon monoxide. Move the generator to a well-ventilated location and consult an authorized Honda Power Equipment dealer.

CO SENSOR LIFE
If the FAULT/CO SENSOR LIFE indicator flashes when operating the generator, the CO-MINDER® may be reaching the end of its useful lifespan and will eventually need replacement.
- If the indicator flashes once every four seconds, this means there is approximately six months to one year of life left in the CO-MINDER.
- If the indicator flashes once every two seconds, this means there is approximately six months of life or less left in the CO-MINDER.

NOTICE
- *The FAULT/CO SENSOR LIFE indicator indicates the estimated life left in the CO-MINDER®.*
- *The generator stopping period and storage period are also included in the useful lifespan of the CO-MINDER.*
- *Contact an authorized Honda Power Equipment dealer for CO-MINDER replacement.*

Parallel Operation Outlets

These outlets are used for connecting the EU7000iS to another EU7000iS generator for parallel operation (see page 65). A Honda approved parallel kit (optional equipment) is required for parallel operation. This kit can be purchased from an authorized Honda Power Equipment dealer.

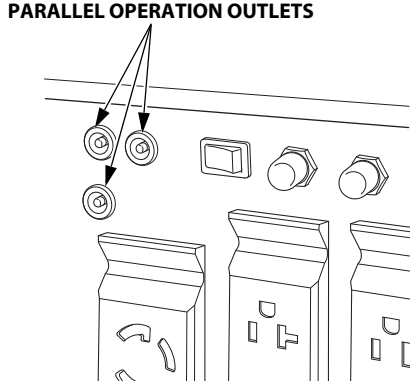

Voltage Selector Switch

Select the voltage before starting the engine.

Always disconnect or turn OFF all appliances or tools connected to the generator before changing the voltage selector switch position.

The voltage selector switch changes generator output to produce "120 V ONLY" or "120 V/240 V". If a 240 V appliance is connected to the 4-prong receptacle, the switch must be in the "120 V/240 V" position. If only the 120 V 3-prong receptacles are being used, select the "120 V ONLY" position.

SWITCH POSITION

- 120 V/240 V: The 120 V and 120 V/240 V receptacles can be used simultaneously.
- 120 V ONLY: ONLY the 120 V receptacles can be used. Do not use the 120 V/240 V receptacle in this position. The most power will be available at the 30 A 120 V locking plug receptacle.

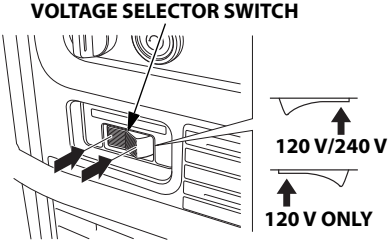

AC Circuit Protectors

The AC circuit protectors will automatically switch OFF if there is a short circuit or a significant overload of the generator at each receptacle. If an AC circuit protector switches OFF automatically, check that the appliance is working properly and does not exceed the rated load capacity of the circuit before resetting the AC circuit protector ON.

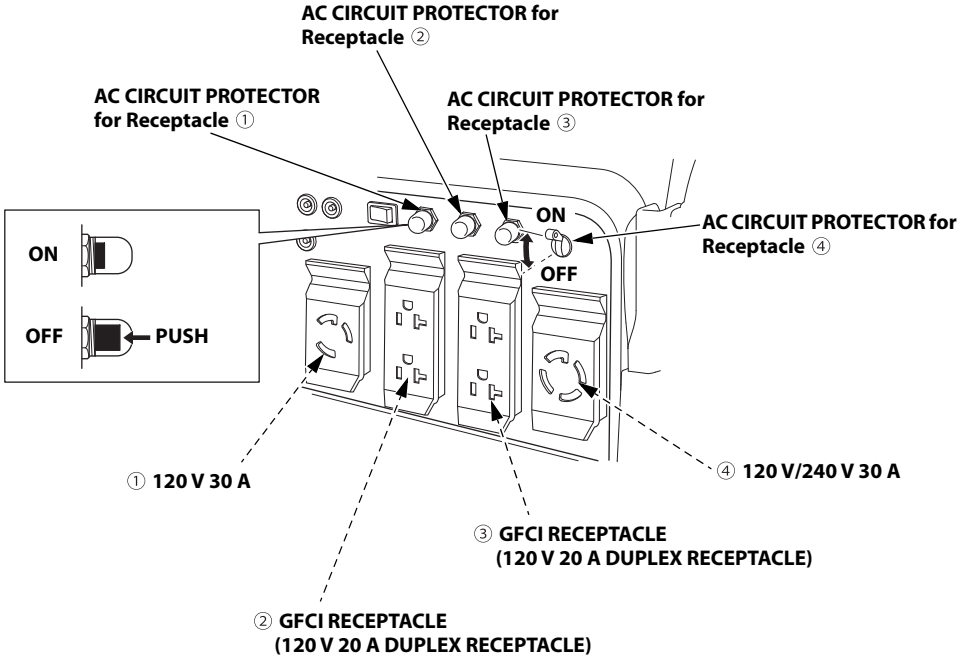

Ground Fault Circuit Interrupter (GFCI) Receptacle
Each 120 V 20 A duplex receptacle is protected by a Ground Fault Circuit Interrupter (GFCI) for protection against the shock hazard of ground fault currents.

An example of ground fault current is the current that would flow through a person who is using an appliance with faulty insulation and, at the same time, is in contact with an electrical ground such as a plumbing fixture, wet floor, or earth. The GFCI will protect against current flowing through that person.

The GFCI will not protect against short circuit or overloads.

GFCIs can be expected to interrupt power supply if there are ground faults or stray current imposed on the wiring by other electrical devices, wiring, or equipment. Due to the risk of a power interruption, this generator is not recommended for powering medical or life support equipment.

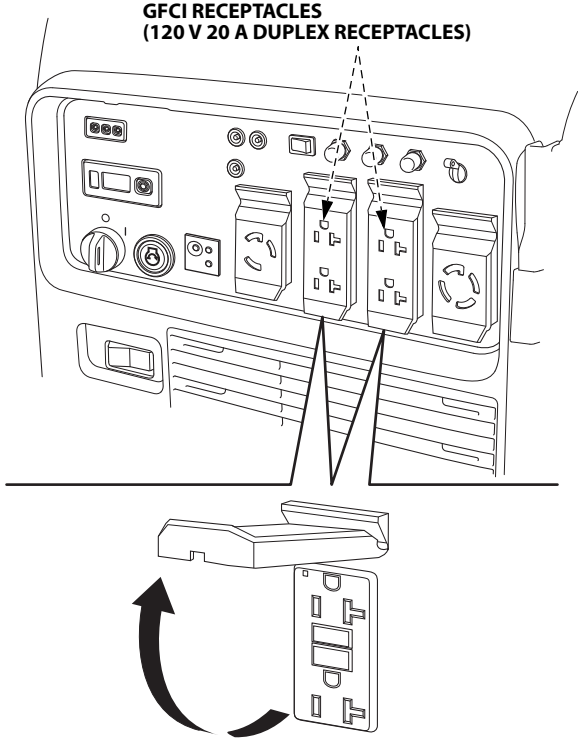

Folding Handle
The foldable handle makes the generator easy to push and should be folded when the generator is stationary. Do not rest objects on the extended handle.

To extend the handle, lift handle upward. Lock levers will lock and secure the handle into place.

To fold the handle,
1. Press both handle lock levers downward.

2. Lower the handle.

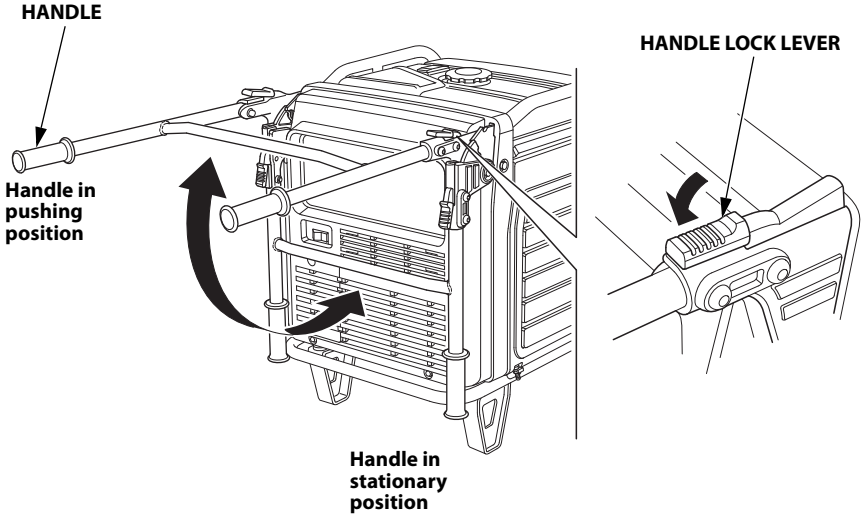

Maintenance Covers

Open and close the maintenance cover for maintenance of this generator. Open the right maintenance cover, to use the recoil starter when the battery is discharged. Be sure the maintenance cover is closed while the generator is running.

NOTICE

Running the generator with maintenance cover(s) open will adversely affect the engine performance, and will cause the generator to overheat.

Open the right maintenance cover for:
- Engine oil inspection/replacement
- Recoil starter

Open the left maintenance cover for:
- Spark plug inspection/replacement
- Air cleaner inspection/cleaning

To open, turn the latch 90° counterclockwise to unlock and open the maintenance cover.

To close, turn the latch 90° clockwise to lock while pushing the cover.

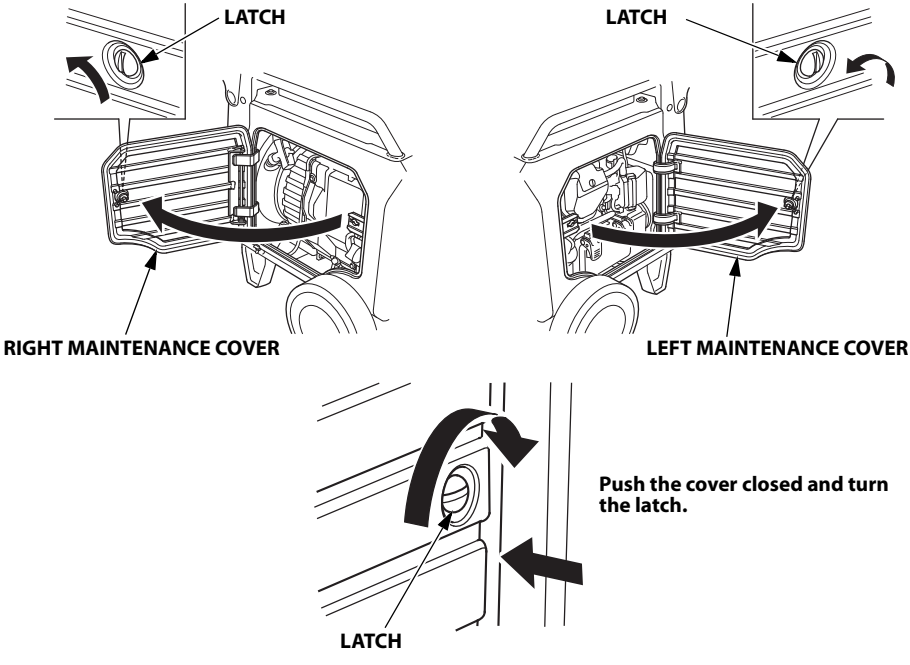

FEATURES

Ground Terminal

The ground terminal is connected to the frame of the generator, the metal non-current-carrying parts of the generator, and the ground terminals of each receptacle.

Before using the ground terminal, consult a qualified electrician, electrical inspector, or local agency having jurisdiction for local codes or ordinances that apply to the intended use of the generator.

NEUTRAL FLOATING:

- The generator (stator winding) is isolated from the frame and from the AC receptacle ground pin.
- Electrical devices that require a grounded receptacle pin connection will not function if the receptacle ground pin is not functional.

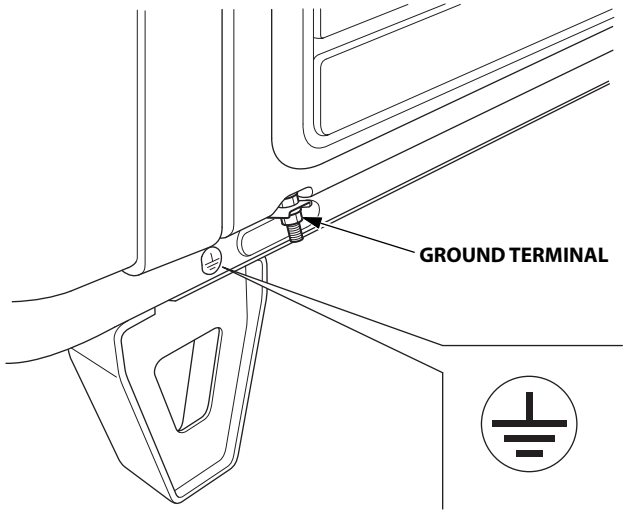

OUTPUT Indicator
The green OUTPUT indicator is illuminated when the generator is operating normally. It indicates that the generator is producing electrical power at the receptacles.

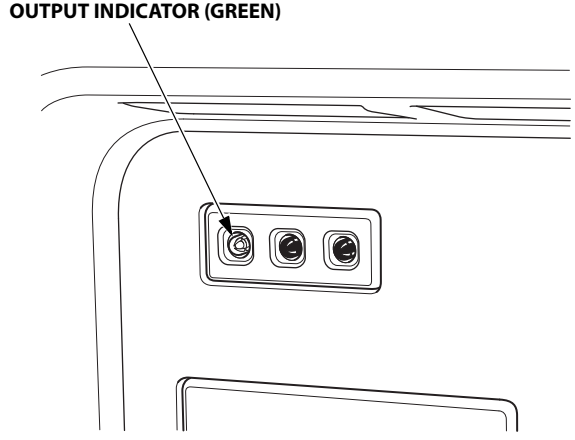

OVERLOAD ALARM (Indicator)
If the generator is overloaded, or if there is a short circuit in a connected appliance, or if the inverter is overheated, the red OVERLOAD ALARM indicator will come ON. When the generator is operating overloaded, the red OVERLOAD ALARM indicator will stay ON and, after about five seconds, current to the connected appliance(s) will shut off, and the green OUTPUT indicator will go OFF.

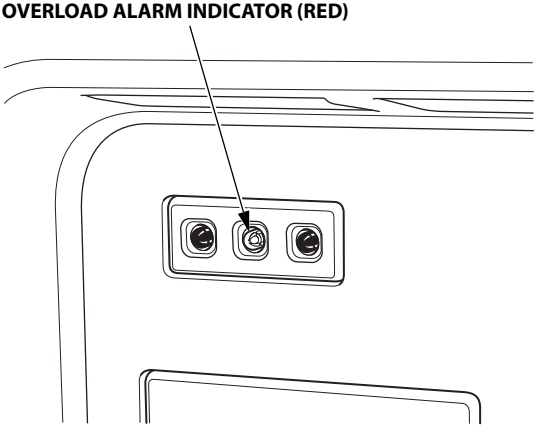

OIL ALERT®/CHECK Indicator

The Oil Alert system is designed to prevent engine damage caused by an insufficient amount of oil in the crankcase. Before the oil level in the crankcase can fall below a safe limit, the OIL ALERT/CHECK indicator comes ON, and the Oil Alert system will automatically stop the engine (the MAIN switch will remain in the ON position).

The i-Monitor display will show "OIL" on the screen and the OIL ALERT/CHECK indicator will illuminate.

If the engine stops or the OIL ALERT/CHECK indicator comes ON when you press the ENGINE START button or pull the starter grip, check the engine oil level (see page 49) before troubleshooting in other areas.

Even when oil is added to the engine, the generator will not restart until the OIL ALERT/CHECK indicator is reset. To reset the OIL ALERT/CHECK indicator, turn the MAIN switch to the OFF position, add the proper amount of oil (see page 49), and then turn the MAIN switch back to the ON position.

If the OIL ALERT/CHECK indicator blinks, consult an authorized Honda Power Equipment dealer.

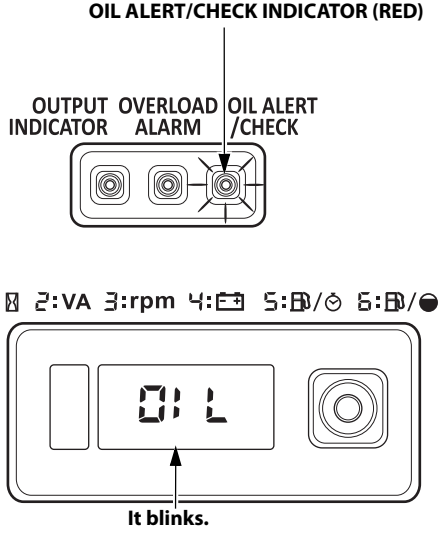

i-Monitor™
The i-Monitor is a user interface that allows the operator to view various information.

i-Monitor at Startup
As the MAIN switch is turned to ON position, all three indicators will blink once and the i-Monitor starts displaying the generator's status in a short while. The condition of the i-Monitor display and all three indicators can be checked. Once the generator is running, the green OUTPUT indicator and the i-Monitor display will remain lit.

Display Backlight Blinks
If the Main switch is left in the ON position for over 30 seconds without starting the engine, the display will start to blink. If the Main switch is left in the ON position for over 30 minutes without starting the engine, the display will turn off.

i-Monitor Display
The i-Monitor display is divided into two screens.
The single-digit screen displays the i-Monitor mode, which is represented by a number:
- Mode 1: Total Operating Hours
- Mode 2: Power Output
- Mode 3: Engine RPM
- Mode 4: Battery Voltage
- Mode 5: Remaining Operating Hours
- Mode 6 (AC1 type only): Remaining Fuel Amount

The four-digit screen displays each mode values or any activated error messages.
The i-Monitor mode switches sequentially by pressing the i-Monitor button.
When you turn the MAIN switch OFF and then ON again, the i-Monitor displays:
- AN1 type: mode 1 - Total Operation Hours
- AC1 type: the mode displayed before turning the MAIN switch to OFF position.

i-Monitor Display Mode 1 – Total Operating Hours

This mode displays the total operating hours of the generator. When the generator is running, the total operating time accumulates. If the total operating time is less than one hour, the numeric display will be "0." When the operating time is one hour or greater, the display will be "1" or "2" and so on. Base the generator's maintenance schedule on the accumulated time displayed.

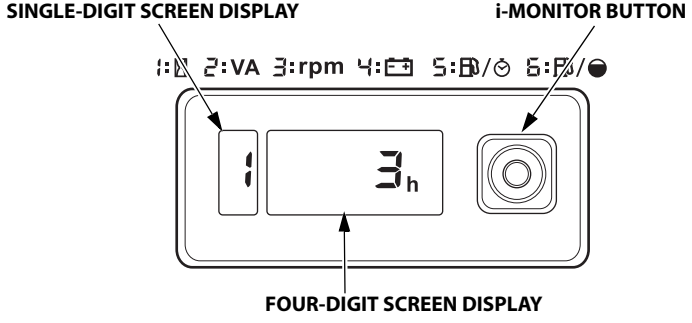

i-Monitor Display Mode 2 – Power Output

This mode displays an approximate generator output on the display screen. The output is expressed in VA (volt-amperes). The output value is not an exact measurement and should be regarded as a reference only. Power output will not display until a load is connected to the generator.

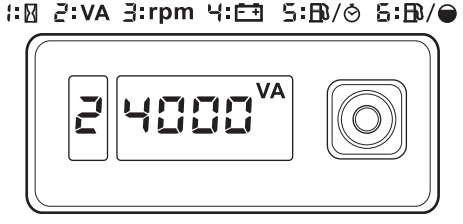

i-Monitor Display Mode 3 – Engine RPM

When the i-Monitor is in this mode, the engine's speed, expressed in revolutions-per-minute (RPM), is displayed.

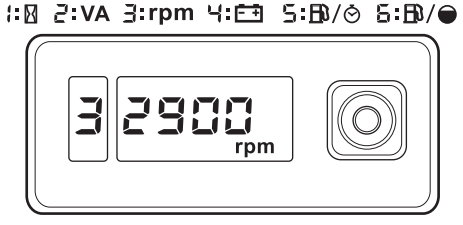

i-Monitor Display Mode 4 – Battery Voltage
This mode displays the battery condition, expressed in Volts DC.

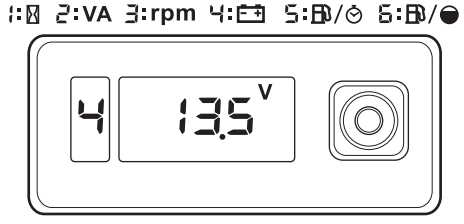

i-Monitor Display Mode 5 – Remaining Operating Hours
This mode displays the remaining operating hours of the generator before it runs out of fuel.

- The remaining operating hours mode is not an exact measurement and should only be regarded as a reference.
- When the engine is started in this mode, remaining operating hours will be displayed in approximately 30 seconds after start-up animation is shown.
- "HI" is displayed when there is enough fuel, and "LO" is displayed when there is not enough fuel.

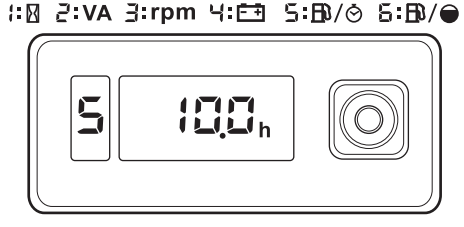

i-Monitor Display Mode 6 – Remaining Fuel Amount (AC1 type only)
This mode displays the remaining amount of the fuel in five levels.

- The remaining amount of fuel is not an exact measurement and should only be regarded as a reference.
- To calculate remaining amount of the fuel properly, always turn the MAIN switch to the OFF position when refueling.
- When the MAIN switch is turned to ON position in this mode, remaining fuel amount will be displayed in approximately 10 seconds after start-up animation is shown.

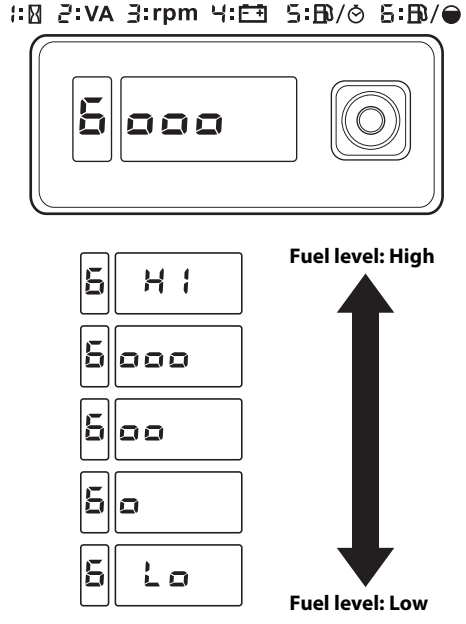

i-Monitor Low Battery Message

If the ENGINE START button is pressed and "batt" is shown on the i-Monitor display, the battery voltage is too low to operate the engine's electric starter. Use the recoil starter to start the generator. Have the battery recharged and checked (see page 85).

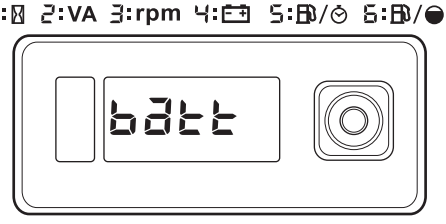

i-Monitor System Error Messages

If the generator has a system malfunction, it will show an error message on the i-Monitor display. During remote control operation, an E-01 error message may display if the ENGINE START button is pressed for more than 10 seconds. With an E-01 error message, the engine will stay running and the electrical output may stay constant.

Normal remote control operation will be restored after the E-01 error message clears automatically. If the E-01 error message does not clear automatically or if any other error message displays, contact an authorized Honda Power Equipment dealer.

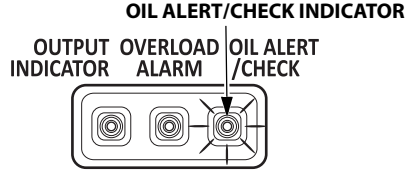

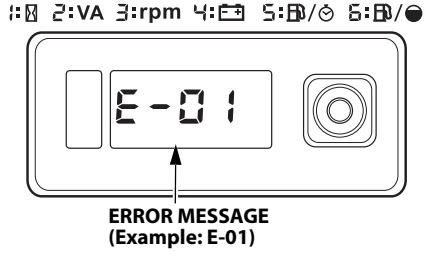

Fuel Gauge (AN1 type only)

The fuel gauge is a mechanical device that measures the fuel level in the tank. The red indicator in the window will reference the level in relation to full or empty. To provide increased operating time, start with a full tank before operation. Check the fuel level with the generator on a level surface. Always refuel with the engine OFF and cool.

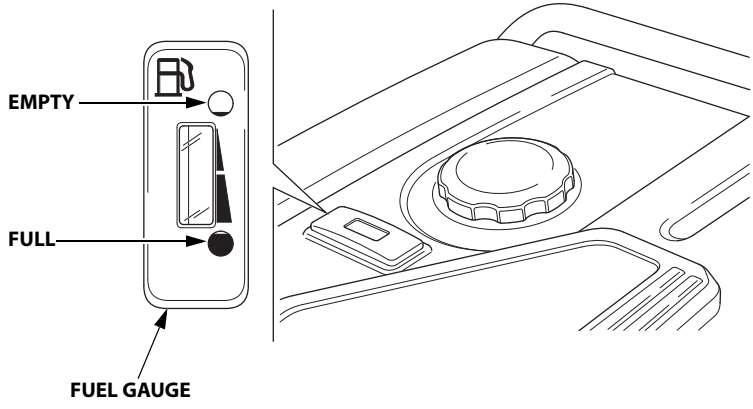

Bluetooth® Function

The generator is connected to a smartphone via a *Bluetooth*® connection.

- The range between your *Bluetooth*® enabled smartphone and the generator can be maximized when there is a clear, obstruction free, line-of-sight between devices. The connection distance is also affected by the type of smartphone used and the surrounding environment, structures, and electronic interference.

Smartphone application

The Honda "My Generator" smartphone application is for use only with Honda generators equipped with *Bluetooth*® technology. The application is able to do the following convenient functions:

- Remote start/stop:
  Can start or stop the generator engine from a distance
- Remote monitoring:
  Displays power output level and remaining fuel level
- Receive notifications:
  Can receive error and maintenance alerts

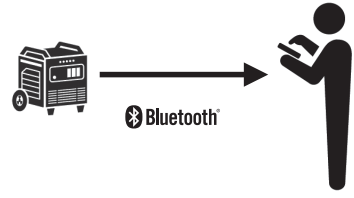

Downloading the app
Go to the App Store (iOS) or Google Play (Android) and search for "Honda My Generator" to download the app.

iOS Android

Pairing (For first time connection only)
Refer to the Support on the Honda "My Generator" smartphone application to pair the smartphone with the generator.

- Perform the pairing operation within 30 seconds after turning the MAIN switch on the generator to the ON position.

Password for the *Bluetooth*® Connection
You may create your own personal password. Please record this password (see page 96). It is very important that you do not forget or lose it. If a password is lost, you must, at your expense, take your generator to an authorized Honda Power Equipment dealer so it can be reset.

BEFORE OPERATION

ARE YOU READY TO GET STARTED?

Your safety is your responsibility. A little time spent in preparation will significantly reduce your risk of injury.

Knowledge
Read and understand this manual. Know what the controls do and how to operate them.

Familiarize yourself with the generator and its operation before you begin using it. Know how to quickly shut off the generator in case of an emergency.

If the generator is being used to power appliances, be sure that they do not exceed the generator's load rating (see page 62).

IS YOUR GENERATOR READY TO GO?

For your safety, to ensure compliance with environmental regulations, and to maximize the service life of your equipment, it is very important to take a few moments before you operate the generator to check its condition. Be sure to take care of any problem you find, or have your servicing dealer correct it, before you operate the generator.

⚠ WARNING

Failure to properly maintain this generator, or failing to correct a problem before operation, could result in a significant malfunction.

Some malfunctions can cause serious injuries or death.

Always perform a pre-operation inspection before each operation and correct any problems.

To prevent a possible fire, keep the generator at least 3 feet (1 meter) away from building walls, vehicles, and other equipment during operation. Do not place flammable objects close to the engine or exhaust.

Before beginning your pre-operation checks, be sure the generator is on a level surface and the MAIN switch is in the OFF position.

NOTICE

Generators with standard equipment transport wheels must not be operated with the wheels and/or stands removed or else the generator may not operate correctly and can become damaged.

Check the Engine

- Before each use, look around and underneath the engine for signs of oil or gasoline leaks.
- Check the engine oil level (see page 49). A low engine oil level will cause the Oil Alert system to shut down the engine.
- Check the air filters (see page 50). Dirty air filters will restrict air flow to the fuel system, reducing engine and generator performance.
- Check the fuel level (see page 43 (AN1 type) / page 41 (AC1 type)). Starting with a full tank will help to eliminate or reduce operating interruptions for refueling.

Check the GFCI

Check the GFCI operation (see page 57) after starting the engine.

Check the Battery Voltage

Check the battery voltage with the i-Monitor (see page 40) before starting the engine.
The battery voltage should be 12.3 V or higher.
If the battery voltage is low, charge the battery until the battery voltage is 12.3 V or higher (see pages 82 to 85).

Battery Maintenance Cover and Wheel Kit

Never operate the generator without the battery maintenance cover and wheel kit in place, as poor engine and generator performance will result.

⚠ WARNING

Operating the generator without the wheel kit installed can pinch or block air vent tubes or fuel drain tubes, causing fuel to spill on the ground or, inside or around the generator.

Spilled fuel can cause a fire and you can be burned or seriously injured.

Always operate the generator with the wheel kit installed and do not modify any part of the generator, including air, drain and fuel tubes, or covers, panels and air intakes.

NOTICE

Generators with standard equipment transport wheels must be operated with the wheels and stands installed to provide air space between the ground and the generator air intake. This prevents fuel, dirt, or debris from being drawn into the generator air intake, which can cause generator or engine damage.

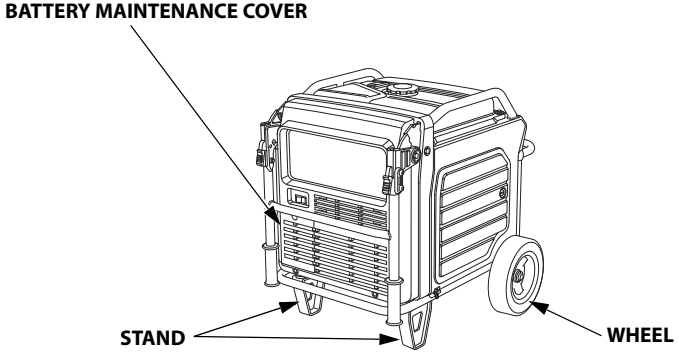

AC Appliance and Power Cord
Before connecting an AC appliance or power cord to the generator:

- Use grounded 3-prong extension cords, tools, and appliances, or double-insulated tools and appliances.
- Inspect cords and plugs, and replace if damaged.
- Do not use cord lengths greater than 164 feet (50 meters), and do not use multiple tools and appliances with built-in noise filters. Such use may activate the GFCI and interrupt power supply.
- Make sure that the appliance is in good working order. Faulty appliances or power cords can create a potential for electric shock.
- Make sure the electrical rating of the tool or appliance does not exceed the rated power of the generator or the receptacle being used.
- Do not exceed the current limit specified for any one receptacle.

ENGINE OIL LEVEL CHECK

Check the engine oil level with the engine stopped and in a level position.

1. Open the right maintenance cover by turning its latch (see page 34).
2. Remove the oil filler cap by turning it counterclockwise. Wipe the dipstick clean.
3. Insert the dipstick into the oil filler neck as shown, but do not screw it in, then remove it to check the oil level.
4. If the oil level is near or below the lower limit, fill with the recommended oil to the upper limit. Do not overfill.
   - "Upper limit" means the oil exists to the oil filler neck.
   - "Lower limit" means the oil only shows at the lower end of the dipstick.

   Refer to "ENGINE OIL RECOMMENDATIONS" on page 20.
5. Reinstall the oil filler cap securely.
6. Close the right maintenance cover by turning its latch (see page 34).

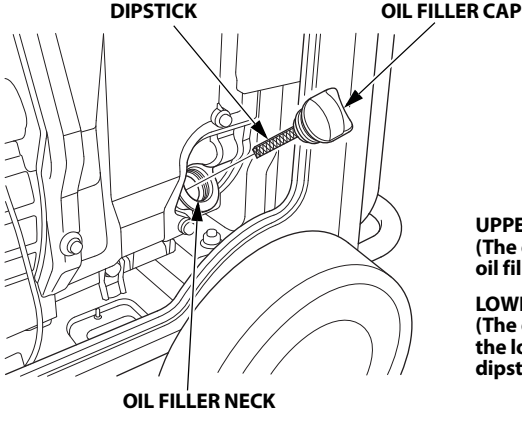

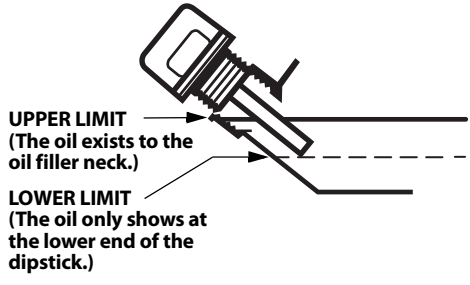

The Oil Alert system will automatically stop the engine before the oil level falls below safe limits. However, to avoid the inconvenience of an unexpected shutdown, check the oil level regularly.

AIR FILTER CHECK

1. Open the left maintenance cover by turning its latch counterclockwise.
2. Unsnap the air cleaner cover clips; remove the air cleaner cover.

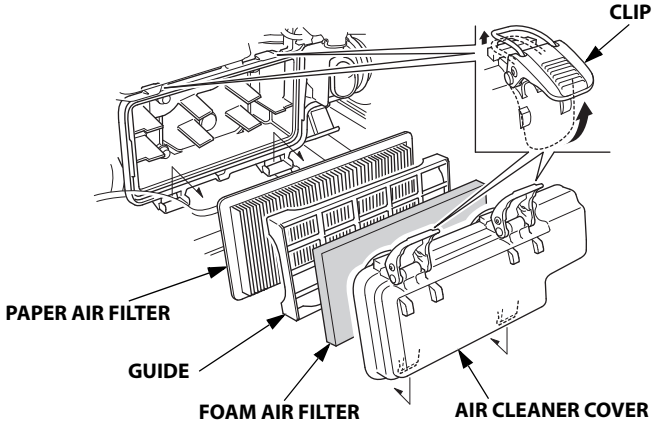

3. Foam air filter:
   a. Remove the foam air filter from the air cleaner cover.
   b. Check the form air filter to be sure it is clean and in good condition.
      If the form air filter is dirty, clean it as described on page 78.
      Replace the form air filter if it is damaged.
   c. Reinstall the form air filter in the air cleaner cover.
4. Paper air filter:
   a. Remove the guide.
   b. If the paper air filter is dirty, replace it with a new one.
      Do not clean the paper air filter.
5. Reinstall the guide and the air cleaner cover.
6. Close the left maintenance cover.

NOTICE

Operating the engine without the air filters, or with damaged air filters, will allow dirt to enter the engine, causing rapid engine wear. This type of damage is not covered by the Distributor's Limited Warranty.

SAFE OPERATING PRECAUTIONS

Before operating the generator, review chapters "GENERATOR SAFETY" (see page 7).

For your safety, do not operate the generator in an enclosed, or partly enclosed area such as a garage (even if the door is open) or near structures or vehicles. Your generator's exhaust contains poisonous carbon monoxide gas that can collect rapidly in such areas, structures, vehicles, trailers, or boats.

- Do not operate the generator when it is in a storage, cargo, or security enclosure, including any RV generator bay.
- Always completely remove the generator from the vehicle, trailer, boat or other equipment or structure during operation.
- The generator must remain stationary while in operation.

⚠ WARNING

Exhaust contains poisonous carbon monoxide gas that can build up to dangerous levels in enclosed or partly enclosed areas.

Breathing carbon monoxide can cause unconsciousness or death.

Never run this product's engine in an enclosed, or even partly enclosed area.

OPERATION

STARTING THE ENGINE

To prevent a possible fire, keep the generator at least 3 feet (1 meter) away from building or trailer walls, vehicles, trailers, boats, and other equipment during operation. Do not place flammable objects close to the engine or exhaust.

NOTICE

- *Operating this generator less than 3 feet (1 meter) from a building, obstruction, or when it is in an enclosure, a storage or security compartment/bay, can cause overheating and damage the generator.*
- *For proper cooling, allow at least 3 feet (1 meter) of empty space above and around the generator.*
  Keep all cooling holes open and clear of debris, mud, water, etc. Cooling holes are located on the control panel and the bottom of the generator. If the cooling holes are blocked, the generator may overheat and damage the engine, inverter, or windings.
- *Since the CO-MINDER® may detect the carbon monoxide concentration and the engine may stop automatically, pay attention to the direction of exhaust and where the generator is located (see page 28).*

Refer to "SAFE OPERATING PRECAUTIONS" on page 51 and perform the "IS YOUR GENERATOR READY TO GO?" checks (see page 45).

Refer to "AC OPERATION" (see page 60) for connecting loads to the generator.

1. Make sure that all appliances are disconnected from the AC receptacles.

2. Set the Voltage Selector Switch to match the voltage requirements for the application.

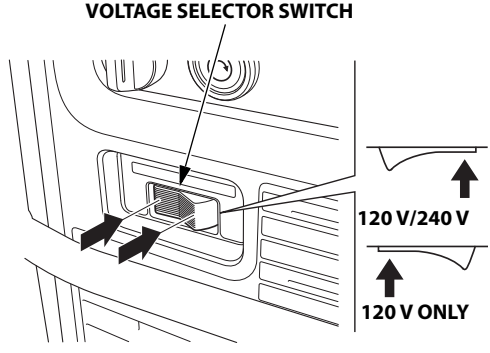

3. Make sure the Eco Throttle switch is in the OFF position, or more time will be required for warm-up.
   If you wish to use the Eco Throttle system, turn the Eco Throttle switch to the ON position after the engine has warmed up for 2 or 3 minutes.

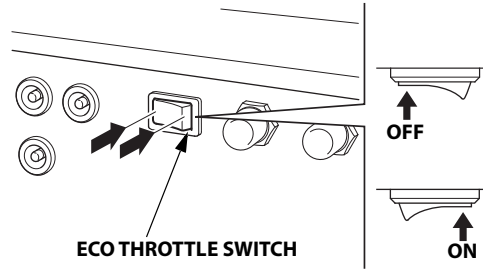

4. Turn the MAIN switch to the ON position.

5. Press and release the ENGINE START button.
   The ENGINE START button functions for 5 seconds. As soon as the engine starts, the starter will stop automatically.

   If the engine fails to start, wait at least 10 seconds before operating the starter again.

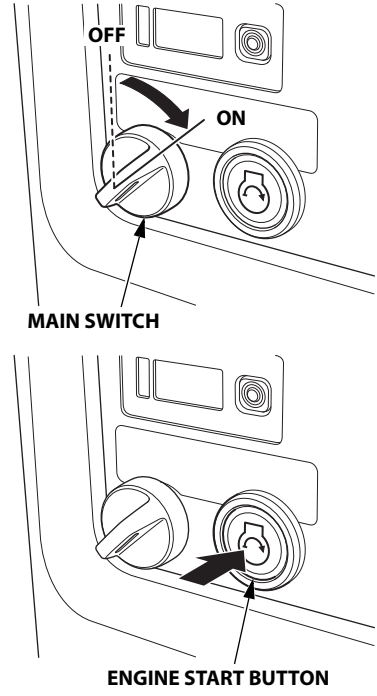

Do not leave the MAIN switch in the ON position when the generator is not operating or the battery will be drained. Turn the MAIN switch to the OFF position when not in use.
If the MAIN switch is left in the ON position without starting the engine within 30 minutes, the ENGINE START button will not function.

- To restart the engine using the ENGINE START button, the MAIN switch must be turned to the OFF position, and then back to the ON position.
- If the MAIN switch is left on longer than 30 minutes, the engine will still start using a *Bluetooth*® enabled smartphone.

- Use the recoil starter when the battery voltage is too low to turn the starter motor.

  a. Turn the MAIN switch to the ON position.

  b. Open the right maintenance cover by turning its latch counterclockwise.

  c. Pull the starter grip lightly until you feel resistance; then pull briskly in the direction of the arrow as shown.

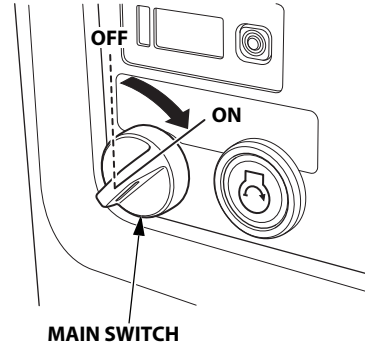

NOTICE

- *Do not exceed 20 degrees from horizontal when pulling the starter grip or the starter rope may become damaged.*
- *Do not allow the starter grip to snap back against the engine. Return it gently to prevent damage to the starter.*
- *Do not let the starter rope rub against the generator body, or the rope will wear out prematurely.*

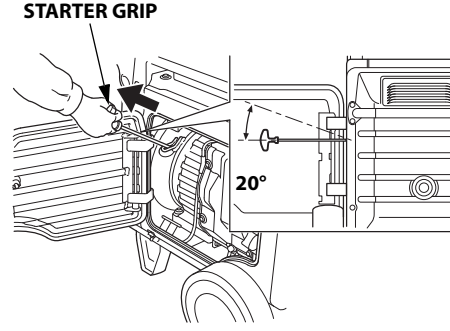

  d. Close the right maintenance cover by turning its latch clockwise.

6. If you wish to use the Eco Throttle system, turn the Eco Throttle switch to the ON position after the engine has warmed up for 2 or 3 minutes.

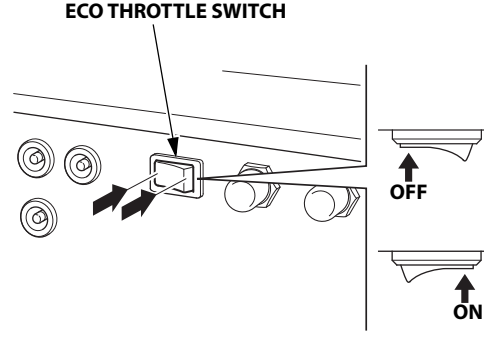

STOPPING THE ENGINE

1. Turn off or disconnect all appliances or devices that are connected to the generator.

2. Turn the MAIN switch to the OFF position. For additional safety, remove the key from the MAIN switch.

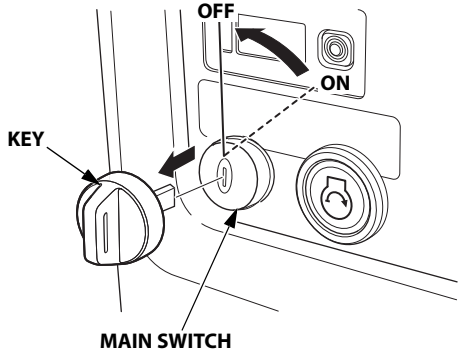

3. Unplug all appliances from the generator AC receptacles.

4. If two generators were connected for parallel operation, disconnect the parallel operation cable after stopping the engines if you do not wish to resume parallel operation.

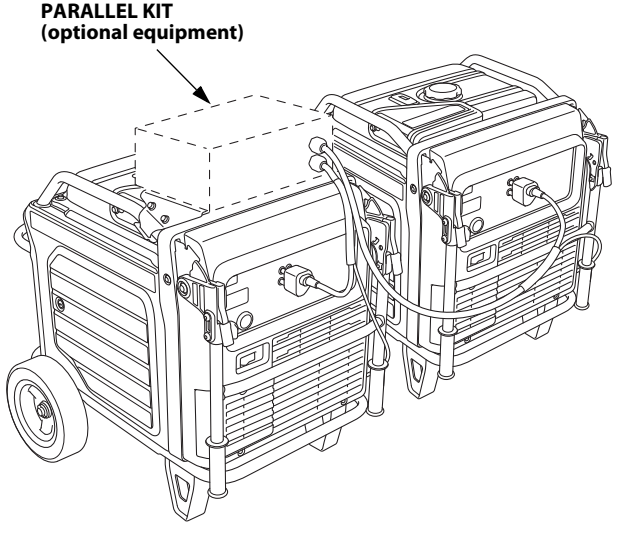

STARTING AND STOPPING THE ENGINE with *Bluetooth*® ENABLED SMARTPHONE

The engine can be started/stopped via a *Bluetooth*® enabled smartphone using a *Bluetooth*® application.
Refer to the *Bluetooth*® application to check the connection, operation, and for help pairing a smartphone.

HOW TO RESTART WHEN STOPPED BY CO-MINDER® (CO SHUT-OFF SYSTEM)

When the engine is automatically stopped by the CO-MINDER®, move the generator to an area with fresh air and away from any device that may be emitting carbon monoxide, such as another generator. Press the CO-MINDER reset button and then follow the standard procedure for starting the engine.
When the CO ALARM indicator or the FAULT/CO-MINDER LIFE indicator flashes, press the CO-MINDER reset button to turn off the indicator.
However, even if the CO-MINDER reset button is pressed and the CO ALARM indicator turns off, the engine cannot be started remotely using the *Bluetooth*® connection unless the engine is started using the ENGINE START button on the control panel once.

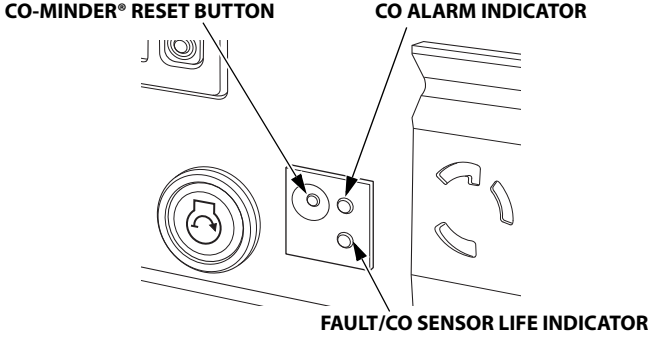

GFCI OPERATION CHECK

Always check GFCI operation before using the generator.

⚠ WARNING

A faulty GFCI system will not provide proper protection against electric shock as designed.

An electric shock can result in serious injury or death.

Always perform the GFCI system inspection before using the generator. If the GFCI system fails the test, the generator must be repaired by your servicing dealer before use.

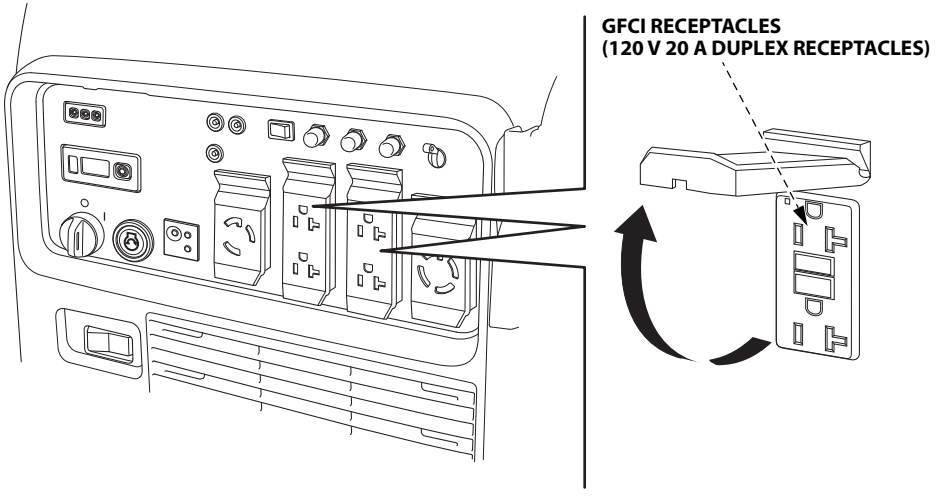

1. Unplug all tools and appliances from the generator.
2. Start the engine (see page 52).
   When the GFCI is operating normally, the GFCI indicator will continuously light green.

   Light order:
   (red) Blink once → (green) Lights continuously

   - If the green GFCI indicator does not come on, press the GFCI RESET button.
   - If the red GFCI indicator starts to blink continuously, contact an authorized Honda Power Equipment dealer.

3. Press the GFCI TEST button:
   - The GFCI RESET button will pop out and the green GFCI indicator will go off.
   - If the GFCI does not function as described, contact an authorized Honda Power Equipment dealer.

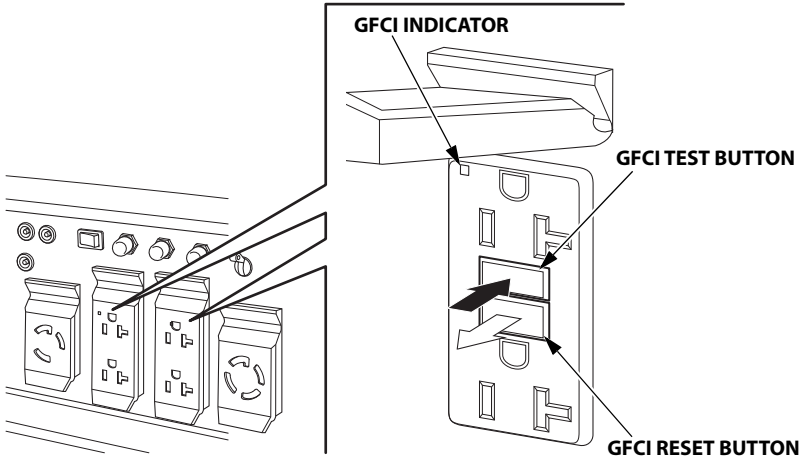

4. Press the GFCI RESET button:
   - The green GFCI indicator will light continuously.
   - If the red GFCI indicator starts to blink continuously, contact an authorized Honda Power Equipment dealer.

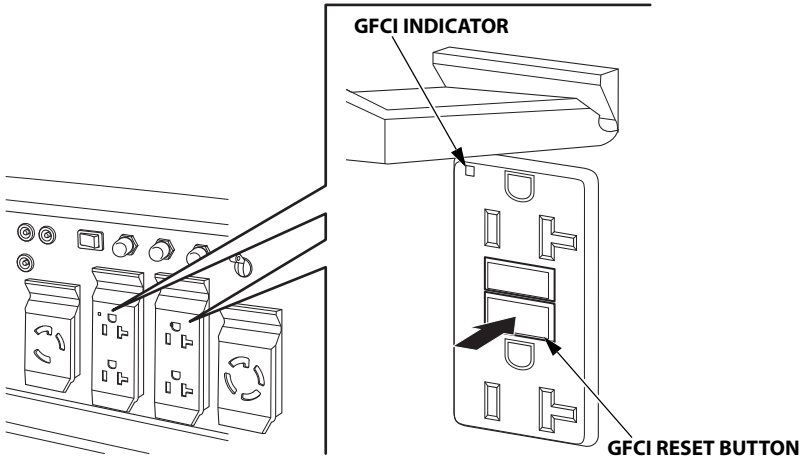

When the GFCI RESET button pops out or the green GFCI indicator does not light during operation:

- Unplug all appliances from the GFCI protected receptacle.
- Press the GFCI RESET button.
  – If the GFCI cannot be reset, the GFCI is faulty. Contact an authorized Honda Power Equipment dealer.
  – If the GFCI RESET button extends, this usually indicates a faulty power tool, appliance, or cord. If that occurs, perform operation check steps 1 through 4 to verify that the GFCI is in proper working order. If the GFCI tests correctly, then the fault is likely to be in the power tool, appliance, or cord. Repair or replace the faulty power tool, appliance, or cord before further use.

AC OPERATION

If an appliance begins to operate abnormally, becomes sluggish, or stops suddenly, turn it off immediately. Disconnect the appliance, and determine whether the problem is in the appliance or the rated load capacity of the generator has been exceeded.

NOTICE

- *Substantial overloading that continuously lights the red OVERLOAD ALARM indicator may damage the generator. Marginal overloading that temporarily lights the red OVERLOAD ALARM indicator may shorten the service life of the generator.*
- *Be sure that all appliances are in good working order before connecting them to the generator. Electrical equipment (including lines and plug connections) should not be defective. If an appliance begins to operate abnormally, becomes sluggish, or stops suddenly, turn the MAIN switch to OFF position immediately. Then disconnect the appliance, and examine it for signs of malfunction.*

1. Turn the voltage selector switch to either position.
   With the voltage selector switch in the "120 V/240 V" position, you can use the 120 V and 120 V/240 V receptacles simultaneously. If you are NOT using the 120 V/240 V receptacle, then select the "120 V ONLY" position.

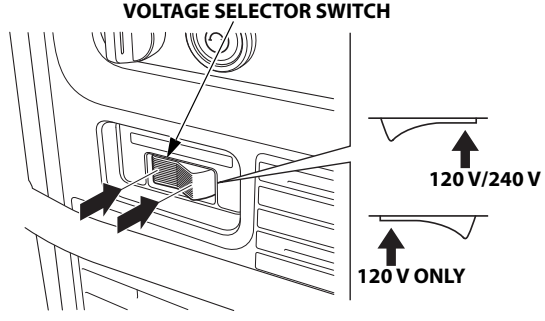

2. Start the engine and make sure the green OUTPUT indicator comes on.

3. Make sure the AC circuit protectors are ON (see page 31).

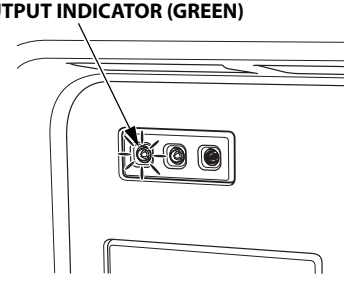

4. Plug in the appliance.
   Most motorized appliances require more than their rated wattage for startup.

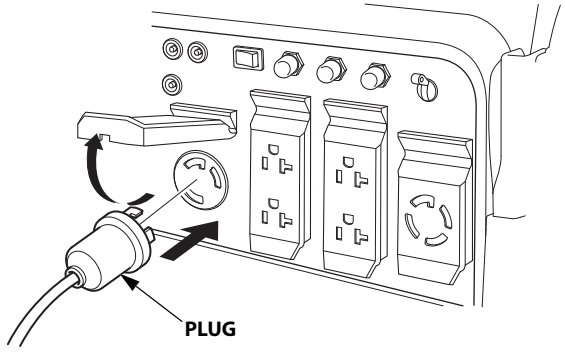

5. Turn on the appliance.

If the generator is overloaded, or if there is a short circuit in a connected appliance, or if the inverter is overheated, the red OVERLOAD ALARM indicator will come ON. The red OVERLOAD ALARM indicator will stay ON and, after about five seconds, current to the connected appliance(s) will shut off, and the green OUTPUT indicator will go OFF. Stop the engine and investigate the problem.

Determine if the cause is a short circuit in a connected appliance, an overload, or an overheated inverter. Correct the problem and restart the generator.

Before connecting an appliance to the generator, make sure that it is in good order and that its electrical rating does not exceed that of the generator. Then start the generator and connect the appliance power cord.

When an electric motor is started, the red OVERLOAD ALARM indicator may come on. This is normal if the red OVERLOAD ALARM indicator goes OFF after about five seconds. If the red OVERLOAD ALARM indicator stays ON, consult an authorized Honda Power Equipment dealer.

AC Applications
Before connecting an appliance or power cord to the generator:

- Make sure that it is in good working order. Faulty appliances or power cords can create a potential for electrical shock.
- If an appliance begins to operate abnormally, becomes sluggish, or stops suddenly, turn it off immediately. Disconnect the appliance, and determine whether the problem is the appliance or the rated load capacity of the generator has been exceeded.

Most appliance motors require more than their rated wattage for startup. Make sure the electrical rating of the tool or appliance does not exceed the maximum power rating of the generator.

Maximum power is:

7.0 kVA

For continuous operation, do not exceed the rated power.
Rated power is:

5.5 kVA

In either case, the total power requirements (VA) of all appliances connected must be considered. Appliance and power tool manufacturers usually list rating information near the model number or serial number.

NOTICE
Substantial overloading will open the circuit protector. Slightly overloading the generator may not switch the circuit protector OFF, but will shorten the service life of the generator.

AC Receptacle Selection

The control panel, shown below, has a voltage selector switch and four receptacles. Receptacle 4, the 240-volt receptacle, has two powered terminals, 4A and 4B.

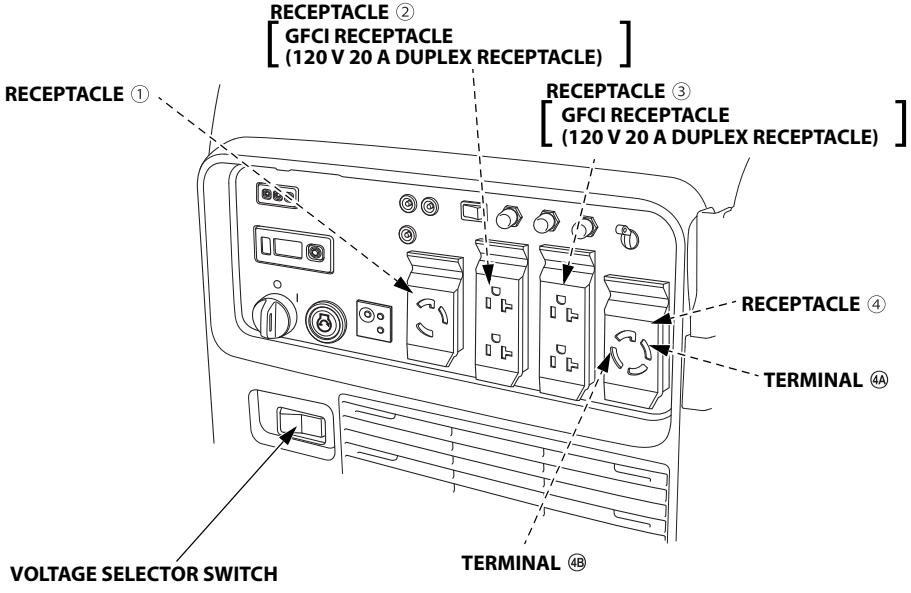

Power Producing Circuits

This generator is equipped with two power generating circuits. When the voltage selector switch is in the 120 V/240 V position, each of the two power producing circuits supplies power to specific receptacles. When the voltage selector switch is in the 120 V ONLY position, the power producing circuits operate in parallel, sharing the total load connected to terminal 4A and receptacles 1, 2, and 3.

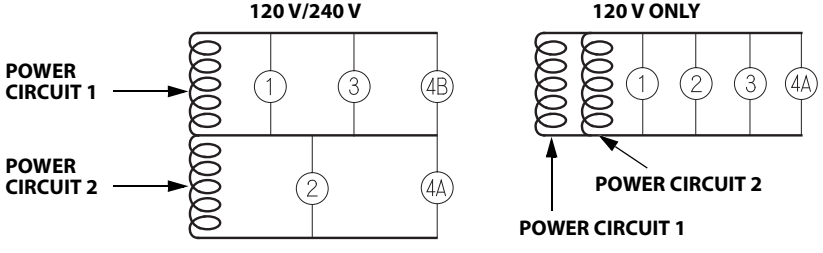

Voltage Selector Switch

NOTICE

Disconnect or turn OFF all appliances or tools connected to the generator before changing the voltage selector switch position.
The generator may be damaged if the switch position is changed with loads connected and operating.

The power available to each receptacle depends on the position of the voltage selector switch.

Switch Position	Receptacle	Available Power
120 V ONLY	①	30 A at 120 V
	②	20 A at 120 V
	③	20 A at 120 V
	④A	30 A at 120 V
	④B	None
120 V/240 V	①	22.9 A at 120 V
	②	20 A at 120 V
	③	20 A at 120 V
	④A-④B	22.9 A at 240 V

120 V ONLY POSITION
When the voltage selector switch is in the 120 V ONLY position, you do not need to spread the load over the receptacles. You must, however, make sure the load on any receptacle does not exceed its available power shown in the preceding table and the total load does not exceed 45.8 amps.

120 V/240 V POSITION
When the voltage selector switch is in the 120 V/240 V position, you must balance the load. Divide the load between the two sets of receptacles shown below. Balancing is necessary because each set of receptacles is powered by only one power producing circuit that can produce a maximum of 22.9 amps.

Set of Receptacles	Total Current Available	Power Producing Circuit
① + ③ + ④B	22.9 A	1
② + ④A	22.9 A	2

AC PARALLEL OPERATION

Before connecting an appliance to either generator, make sure that the appliance is in good working order and that its electrical rating does not exceed that of the receptacle.
Most motorized appliances require more than their electrical rating for startup. When an electric motor is started, the OVERLOAD ALARM indicator (red) may come ON. This is normal if the OVERLOAD ALARM indicator (red) goes OFF within 5 seconds. If the OVERLOAD ALARM indicator (red) stays ON, consult your generator dealer.
During parallel operation, the Eco Throttle switch should be in the same position on both generators.

1. Install the parallel kit on the frame of one generator.
   Connect the parallel operation cable between two EU7000iS generators following the instructions supplied with the parallel kit.

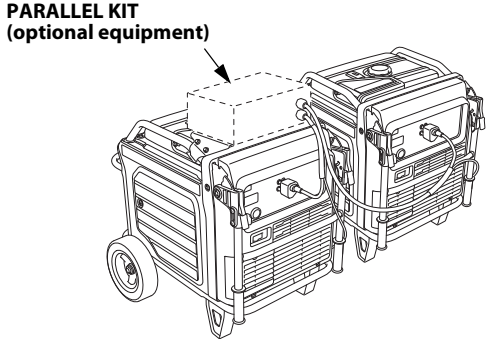

2. Set the voltage selector switch of both generators to 120 V/240 V.

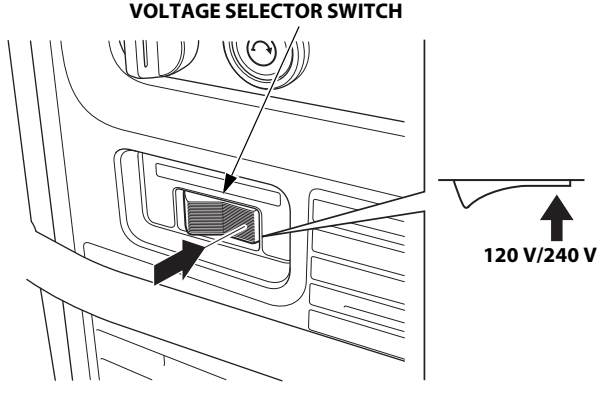

3. Start the engine on each generator and make sure each OUTPUT indicator (green) comes ON.

4. Turn the AC circuit protector of the parallel operation box ON.

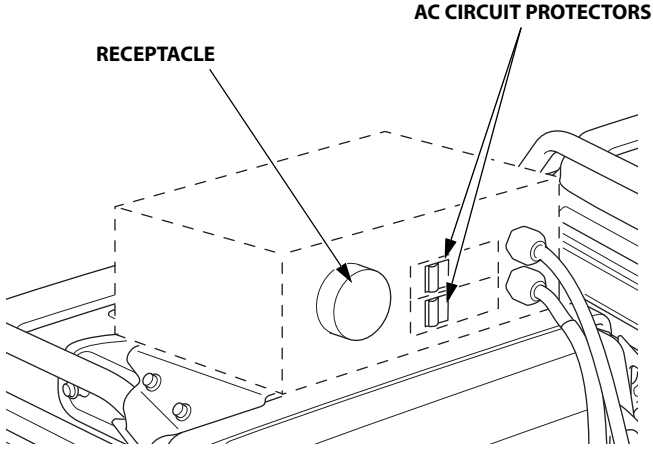

5. Plug in the appliance following the instructions provided with the parallel kit.

6. Turn on the appliance.

If the generators are overloaded (see page 69), or if there is a short circuit in a connected appliance, the OVERLOAD ALARM indicators (red) will come ON. The OVERLOAD ALARM indicators (red) will stay ON and after about five seconds, current to the connected appliance(s) will shut off, and the OUTPUT indicators (green) will go OFF. Stop both engines and investigate the problem. Determine if the cause is a short circuit in a connected appliance or an overload. Correct the problem and restart the generators.

AC Parallel Operation Applications

Two EU7000iS generators can be connected together to increase the available power using a parallel kit (optional equipment).

Follow the instructions included with the parallel kit.
Before connecting an appliance or power cord to the generator:

- Make sure that it is in good working order. Faulty appliances or power cords can create a potential for electrical shock.
- If an appliance begins to operate abnormally, becomes sluggish, or stops suddenly, turn it off immediately. Disconnect the appliance, and determine whether the problem is the appliance or the rated load capacity of the generator has been exceeded.
- Never connect different generator models.
- For parallel operation, use only a Honda approved parallel kit (optional equipment) when connecting one EU7000iS to another EU7000iS generator.
- Never connect or remove the parallel operation cable when the generator is running.
- For single generator operation, the parallel operation cable must be disconnected from both generators.

NOTICE

When operating generators in parallel operation, if one generator emits exhaust toward the other, the CO-MINDER® (CO Shut-off System) of the generator that is receiving the exhaust may stop the engine. Pay attention to the following for placing generators in parallel operation.

- *Align the two generators so that their mufflers are on the same line and their exhaust in the same direction.*
- *Place the generator so that the muffler is pointed in the same direction as the wind is blowing and the exhaust is directed away from buildings, other structures, or vehicles.*

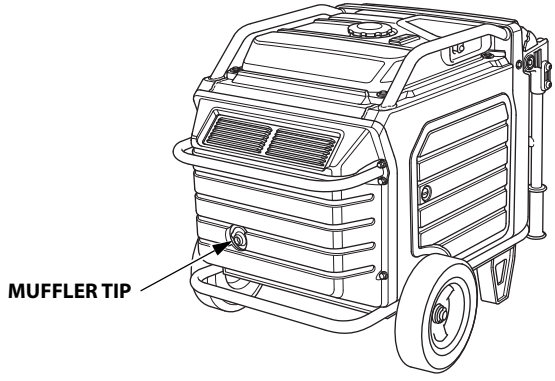

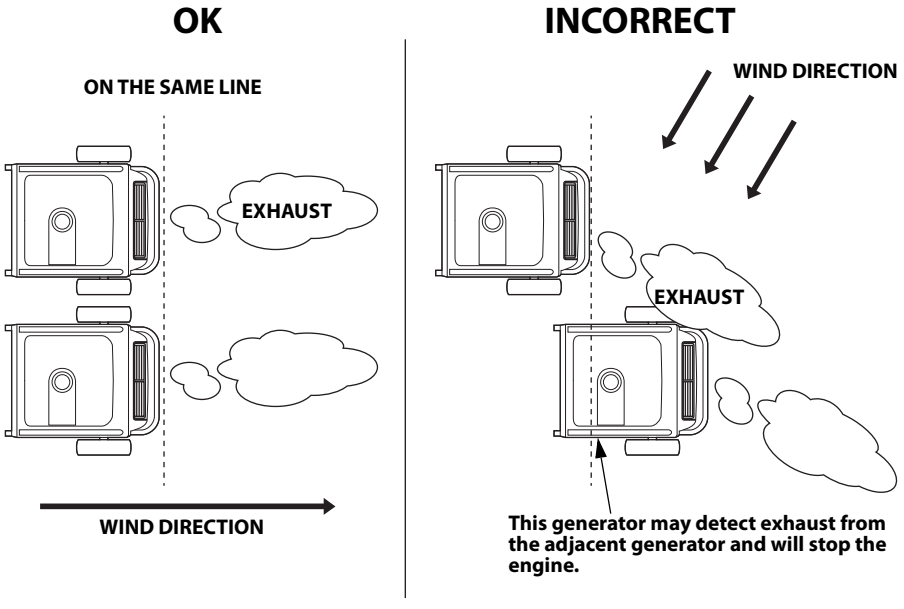

Most appliance motors require more than their rated wattage for startup. Make sure the electrical rating of the tool or appliance does not exceed the maximum power rating of the generator.

Maximum power in parallel operation is:

12.0 kVA

For continuous operation, do not exceed the rated power.
Rated power in parallel operation is:

11.0 kVA

In either case, the total power requirements (VA) of all appliances connected must be considered. Appliance and power tool manufacturers usually list rating information near the model number or serial number.

NOTICE

Substantial overloading that continuously lights the red OVERLOAD ALARM indicator may damage the generator. Marginal overloading that temporarily lights the red OVERLOAD ALARM indicator may shorten the service life of the generator.

ECO THROTTLE® SYSTEM

With the switch in the ON position, engine speed is automatically lowered when loads are reduced, turned off, or disconnected. When appliances are turned on or reconnected, the engine returns to the proper speed to power the electrical load. In the OFF position, the Eco Throttle system does not operate.

Appliances with large start-up power demands may not allow the engine to reach normal operating rpm when they are connected to the generator. Turn the Eco Throttle switch to the OFF position and connect the appliance to the generator. If the engine still will not reach normal operating speed, check that the appliance does not exceed the rated load capacity of the generator.

If high electrical loads are connected simultaneously, turn the Eco Throttle switch to the OFF position to reduce voltage changes.

The Eco Throttle system is not effective for use with appliances or tools that require only momentary power. If the tool or appliance will be turned ON and OFF quickly, the Eco Throttle switch should be in the OFF position.

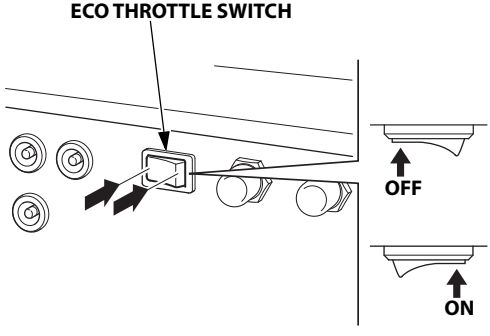

STANDBY POWER

Connections to a Building's Electrical System

Connections for standby power to a building's electrical system must be made by a qualified electrician. The connection must isolate the generator power from utility power, and must comply with all applicable laws and electrical codes.

⚠ WARNING

Improper connections to a building's electrical system can allow current from the generator to backfeed into the utility lines.

Such backfeed may electrocute utility company workers or others who contact the lines during a power outage, and the generator may explode, burn, or cause fires when utility power is restored.

Consult the utility company or a qualified electrician prior to making any power connections.

In some areas, generators are required by law to be registered with local utility companies. Check local regulations for proper registration and use procedures.

System Ground

This generator has a system ground that connects generator frame components to ground terminals in the AC output receptacles. The system ground is not connected to the AC neutral wire.

Special Requirements

NOTICE

Do not lay the generator on its side when moving, storing, or operating it. Oil and fuel may leak and damage the engine or your property.

There may be Federal or State Occupational Safety and Health Administration (OSHA) regulations, local codes, or ordinances that apply to the intended use of the generator. Please consult a qualified electrician, electrical inspector, or the local agency having jurisdiction.

- In some areas, generators are required to be registered with local utility companies.
- If the generator is used at a construction site, there may be additional regulations that must be observed.

SERVICING YOUR GENERATOR

THE IMPORTANCE OF MAINTENANCE

Good maintenance is essential for safe, economical, and trouble-free operation. It will also help reduce air pollution.

To help you properly care for your generator, the following pages include a maintenance schedule, routine inspection procedures, and simple maintenance procedures using basic hand tools. Other service tasks that are more difficult or require special tools are best handled by professionals and are normally performed by a Honda technician or other qualified mechanic.

The maintenance schedule applies to normal operating conditions. If you operate your generator under unusual conditions, such as sustained high-load or high-temperature operation, or use it in dusty conditions, consult your servicing dealer for recommendations applicable to your individual needs and use.

⚠ WARNING

Failure to properly maintain this generator, or failing to correct a problem before operation, could result in a significant malfunction.

Some malfunctions can cause serious injuries or death.

Always follow the inspection and maintenance recommendations and schedules in this owner's manual.

Remember that an authorized Honda Power Equipment dealer knows your generator best and is fully equipped to maintain and repair it.

To ensure the best quality and reliability, use only new, Honda Genuine parts or their equivalents for repair and replacement.

Maintenance, replacement, or repair of the emission control devices and systems may be performed by any engine repair establishment or individual, using parts that are "certified" to EPA standards.

MAINTENANCE SAFETY

Some of the most important safety precautions follow. However, we cannot warn you of every conceivable hazard that can arise in performing maintenance. Only you can decide whether or not you should perform a given task.

⚠ WARNING

Improper maintenance can cause an unsafe condition.

Failure to properly follow maintenance instructions and precautions can cause serious injuries or death.

Always follow the procedures and precautions in this owner's manual.

Safety Precautions
Read the instructions before you begin, and make sure you have the tools and skills required.

- Make sure the engine is off before you begin any maintenance or repairs. This will eliminate several potential hazards:
  - **Carbon monoxide poisoning from engine exhaust**
    Operate outside away from open windows or doors with engine exhaust directed away from occupied structures.
  - **Burns from hot parts**
    Let the engine and exhaust system cool before touching.
  - **Injury from moving parts**
    Do not run the engine unless instructed to do so.
- To reduce the possibility of fire or explosion, be careful when working around gasoline. Use only a non-flammable solvent, not gasoline, to clean parts. Keep cigarettes, sparks, and flames away from all fuel-related parts.

MAINTENANCE SCHEDULE

Failure to follow this maintenance schedule could result in non-warrantable failures.

REGULAR SERVICE PERIOD (3) / ITEM Perform at every indicated month or operating hour interval, whichever comes first.		Each use	First month or 20 hrs.	Every 3 months or 50 hrs.	Every 6 months or 100 hrs.	Every year or 300 hrs.	Page
Engine oil	Check level	o					49
	Change		o		o		76
Air cleaner	Check	o					50
	Clean			o (1)			78
	Replace					o (*)	50
GFCI operation	Check	o					57
Canister	Check	Every 2 years (2)					—
Purge tube	Check						—
Charge tube	Check						—
Air tube (AC1 type only)	Check						—
Purge control solenoid valve (AC1 type only)	Check						—
Fuel tank cap tether (AC1 type only)	Check						—
Spark plug	Check-adjust				o		79
	Replace					o	
Spark arrester	Clean				o		81
Valve clearance	Check-adjust					o (2)	—
Combustion chamber	Clean	After every 1,000 hrs. (2)					—
Fuel tank	Clean	Every 2 years or 1,000 hrs. (2)					—
Fuel pump filter	Change						—
Fuel tube	Check	Every 2 years (Replace if necessary) (2)					—

NOTE:
(*) Replace paper air filter only.
(1) Service more frequently when used in dusty areas.
(2) These items should be serviced by your servicing dealer, unless you have the proper tools and are mechanically proficient. Refer to the Honda shop manual for service procedures. See "Honda PUBLICATIONS" on page 107 for ordering information.
(3) For commercial use, log hours of operation to determine proper maintenance intervals.

This generator is equipped with a catalytic converter. If the engine is not properly maintained, the catalyst in the muffler may lose effectiveness.

ENGINE OIL CHANGE

Drain the oil while the engine is warm to assure rapid and complete draining.

1. Open the right maintenance cover by turning its latch (see page 34).
2. Reach under the generator and remove the black rubber seal located below the oil drain plug.
3. Place a suitable container underneath the generator to catch the used oil.
4. Remove the oil filler cap.
5. Remove the oil drain plug and sealing washer and allow the oil to drain completely.
6. Reinstall the oil drain plug and a new sealing washer. Tighten the plug securely.

   Torque: 16.3 lbf·ft (22.5 N·m, 2.25 kgf·m)
7. Reach under the generator and reinstall the black rubber seal.

NOTICE

Improper disposal of engine oil can be harmful to the environment.
If you change your own oil, please dispose of the used oil properly. Do not discard it in a trash bin, dump it on the ground, or pour it down the drain.

8. With the generator in a level position, fill with the recommended oil to the upper limit. Do not overfill.

   • "Upper limit" means the oil exists to the oil filler neck.
   Refer to "ENGINE OIL RECOMMENDATIONS" on page 20.

   Maximum oil capacity: 1.2 US qt (1.1 L)

9. Reinstall the oil filler cap securely.

10. Close the right maintenance cover by turning its latch (see page 34).

Wash your hands with soap and water after handling used oil.

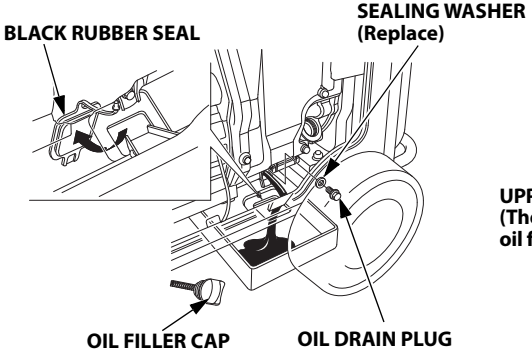

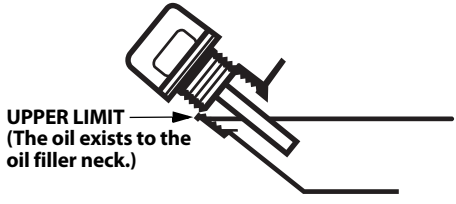

AIR CLEANER SERVICE

Foam Air Filter Cleaning

A dirty foam air filter will restrict air flow to the fuel system, reducing engine performance. If you operate the generator in very dusty areas, clean the foam air filter more frequently than specified in the Maintenance Schedule.

1. Clean the foam air filter in warm soapy water, rinse, and allow to dry thoroughly, or clean in non-flammable solvent and allow to dry.

2. Dip the foam air filter in clean engine oil, and then squeeze out all excess oil. The engine will smoke when started if too much oil is left in the filter.

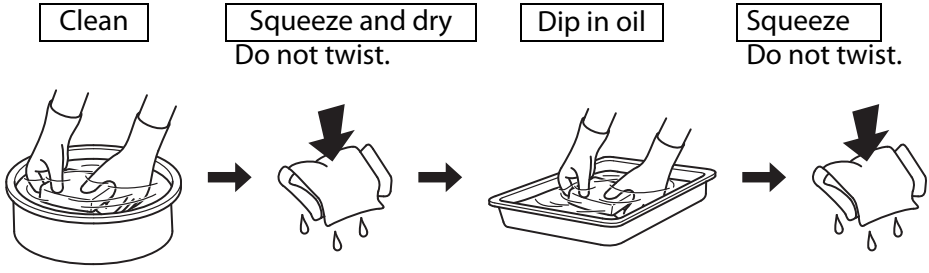

3. Wipe dirt from the inside of the air cleaner cover using a moist rag. Be careful to prevent dirt from entering the air duct that leads to the fuel system.

SPARK PLUG SERVICE

In order to service the spark plug, you will need a spark plug wrench (commercially available).

Required spark plug: BPR6ES (NGK)

To ensure proper engine operation, the spark plug must be properly gapped and free of deposits.

NOTICE

An incorrect spark plug can cause engine damage.

If the engine is hot, allow it to cool before servicing the spark plug.

1. Open the left maintenance cover by turning its latch counterclockwise.
2. Loosen the cover screw and remove the spark plug inspection cover.

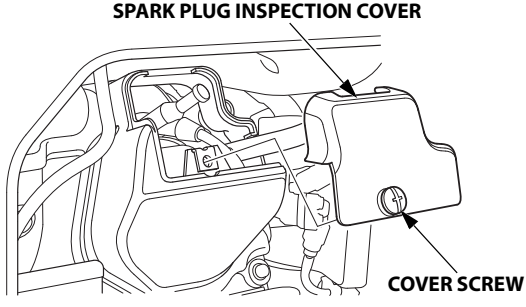

3. Disconnect the spark plug cap, and remove any dirt from around the spark plug area.
4. Remove the spark plug with a spark plug wrench.

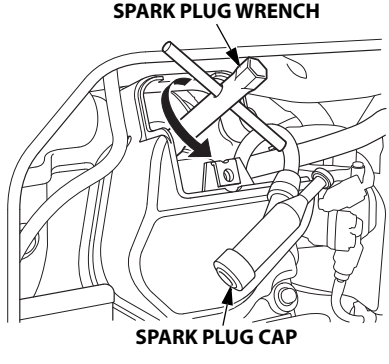

5. Inspect the spark plug. Replace it if the electrodes are worn or fouled, or if the insulator is cracked or chipped. Clean the spark plug with a wire brush if it is to be reused.

6. Measure the spark plug electrode gap with a wire-type feeler gauge. Correct the gap, if necessary, by carefully bending the side electrode.

   Spark plug gap:
   0.028–0.031 in (0.7–0.8 mm)

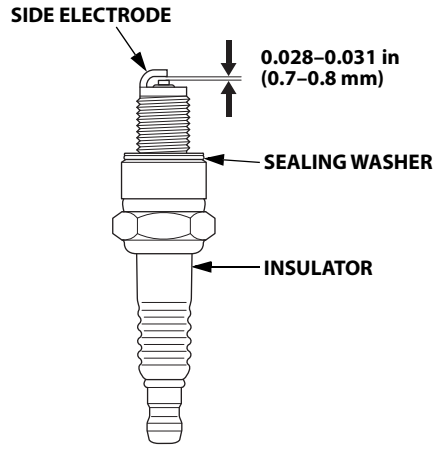

7. Make sure that the spark plug sealing washer is in good condition, and thread the spark plug in by hand to prevent cross-threading.

8. After the spark plug is seated, tighten with a spark plug wrench to compress the washer.
   If reinstalling a used spark plug, tighten 1/8–1/4 turn after the spark plug is seated.
   If installing a new spark plug, tighten 1/2 turn after the spark plug is seated.

   Torque: 13.0 lbf·ft (18 N·m, 1.8 kgf·m)

   NOTICE
   A loose spark plug can overheat and damage the engine.
   Overtightening the spark plug can damage the threads in the cylinder head.

9. Attach the spark plug cap.

10. Reinstall the spark plug inspection cover and tighten the cover screw.

11. Close the left maintenance cover.

SPARK ARRESTER SERVICE

The spark arrester must be serviced every 100 hours to keep it functioning as designed.

If the engine has been running, the muffler will be very hot. Allow the muffler to cool before servicing the spark arrester.

1. Remove the two 5 × 16 mm pan head screws, and remove the tail pipe and spark arrester.

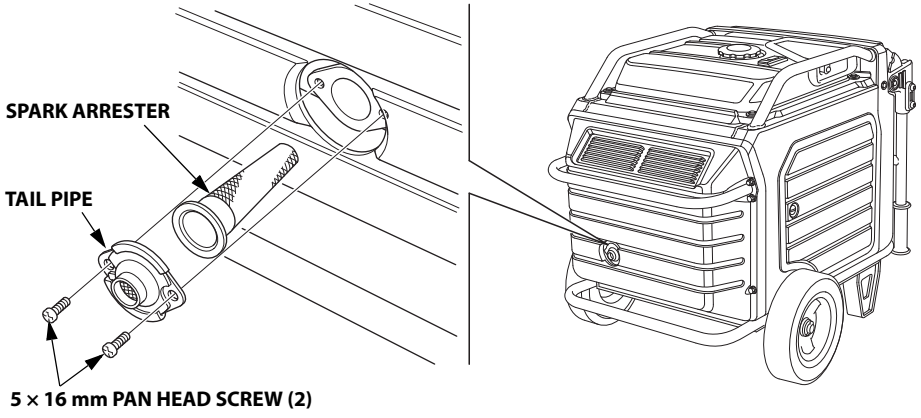

2. Use a brush to remove carbon deposits from the spark arrester screen. Be careful to avoid damaging the screen.
   The spark arrester must be free of breaks and tears. Replace the spark arrester if it is damaged.

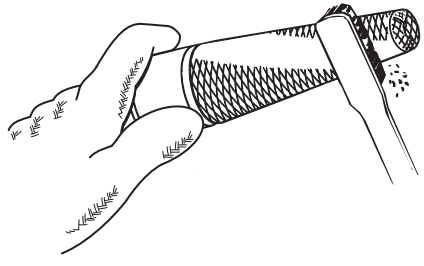

3. Install the spark arrester in the reverse order of removal.

BATTERY SERVICE

Your generator's engine charging system charges the battery while the engine is running. However, if the generator is only used periodically, the battery must be charged monthly to maintain the battery service life.

⚠ WARNING

The battery contains sulfuric acid (electrolyte), which is highly corrosive and poisonous.

Getting electrolyte in your eyes or on your skin can cause serious burns.

Wear protective clothing and eye protection when working near the battery.

Emergency Procedures

Eyes – Wash your eye(s) with plenty of water avoiding damaging your eye(s) with water pressure. Call your local Poison Center or a doctor immediately.

Skin – Remove contaminated clothing. Wash the skin with large quantities of water. Call your local Poison Center or a doctor immediately.

Swallowing – Wash mouth with a large amount of water and drink a cup of water. Call your local Poison Center or a doctor immediately.

⚠ WARNING

The battery gives off explosive hydrogen gas during normal operation.

A spark or flame can cause the battery to explode with enough force to kill or seriously hurt you.

Wear protective clothing and a face shield, or have a skilled mechanic perform the battery maintenance.

Battery Removal

WARNING: Battery posts, terminals, and related accessories contain lead and lead compounds. **Wash your hands after handling.**

1. Lift the handle upward. The lock levers will lock and secure the handle in place.

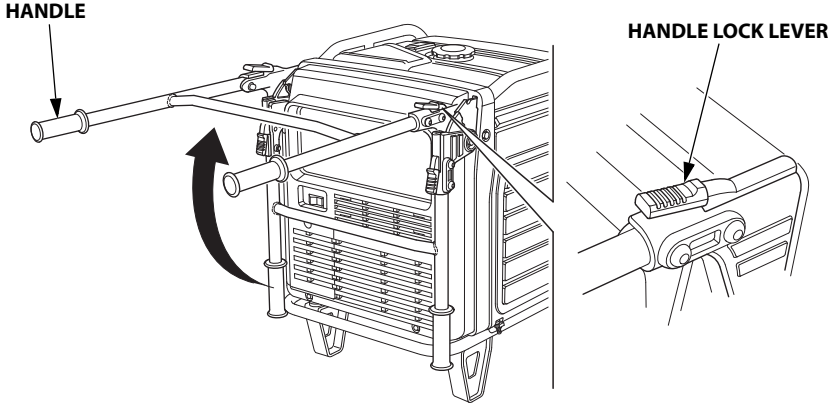

2. Loosen the cover screw and remove the battery maintenance cover.

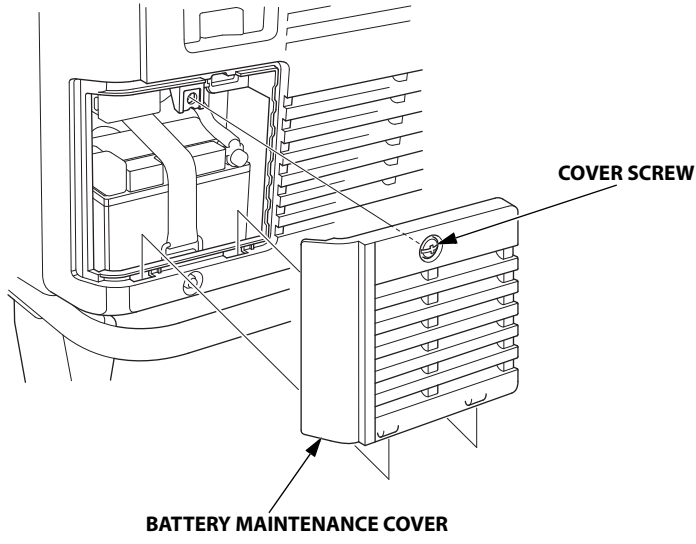

3. Remove the negative (–) cable from the battery negative (–) terminal, and then remove the positive (+) cable from the battery positive (+) terminal.

4. Unhook the battery strap from the bottom hook of the generator.

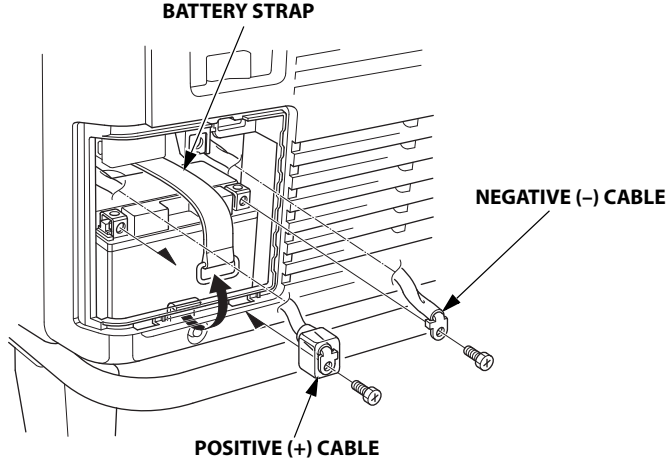

5. Remove the battery.



This symbol on the battery means that this product must not be treated as household waste.

An improperly disposed of battery can be harmful to the environment and human health.
Always confirm local regulations for battery disposal.

Battery Charging
The battery is rated at 11.2 Ah (ampere-hours). Charging current should equal 10% of the battery's ampere-hour rating. A battery charger should be used that can be adjusted to deliver 1.1 ampere.

Battery: 12 V 11.2 Ah (10 HR)

1. Connect the battery charger following the manufacturer's instructions.
2. Charge the battery 5—10 hours.
3. Clean the outside of the battery and the battery tray compartment with a solution of baking soda and water.

Battery Installation
1. Install the battery into the generator.
2. Connect the battery positive (+) cable to the battery positive (+) terminal first, and tighten the bolt securely.
3. Slide the battery boot over the positive (+) cable and terminal.
4. Connect the battery negative (–) cable to the battery negative (–) terminal, and tighten the bolt securely.
5. Install the battery strap.
6. Install the battery maintenance cover in the reverse order of removal (see page 83).

Never operate the generator without the battery cover in place, as poor engine and generator performance will result.

FUSE

If the fuse is blown, the starter motor will not work.

In the event of fuse failure, locate the cause of failure and repair it before you continue operation. If the fuse continues to fail, discontinue generator use and consult your authorized Honda Power Equipment dealer.

1. Turn the MAIN switch to the OFF position and remove the key before checking or replacing the fuse.
2. Loosen the cover screw and remove the battery maintenance cover.

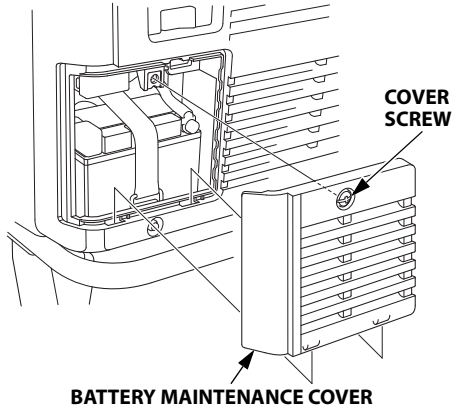

3. Remove the fuse holder cover and pull the fuse out.
4. Replace the fuse with a fuse of the same type and rating.

   Specified fuse: 3 A, 15 A

   NOTICE

   Never use a fuse with a different rating from that specified. Serious damage to the electrical system or fire may result.

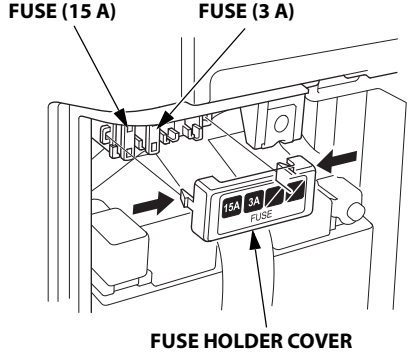

5. Install the fuse holder cover and the battery maintenance cover in the reverse order of removal.

Never operate the generator without the battery maintenance cover in place, as poor engine and generator performance will result.

STORAGE

STORAGE PREPARATION

Proper storage preparation is essential for keeping your generator trouble-free and looking good. The following steps will help to keep rust and corrosion from impairing your generator's function and appearance, and will make the engine easier to start when you use the generator again.

Cleaning

Wipe the generator with a moist cloth. After the generator has dried, touch up any damaged paint, and coat other areas that may rust with a light film of oil.

Fuel

NOTICE

Depending on the region where you operate your equipment, fuel formulations may deteriorate and oxidize rapidly. Fuel deterioration and oxidation can occur in as little as 30 days and may cause damage to the fuel system. Please check with your servicing dealer for local storage recommendations.

Gasoline will oxidize and deteriorate in storage. Old gasoline will cause hard starting, and it leaves gum deposits that clog the fuel system. If the gasoline in your generator deteriorates during storage, you may need to have the fuel system components serviced or replaced.
The length of time that gasoline can be left in your fuel tank without causing functional problems will vary with such factors as gasoline blend, your storage temperatures, and whether the fuel tank is partly or completely filled. The air in a partly filled fuel tank promotes fuel deterioration. Very warm storage temperatures accelerate fuel deterioration. Fuel deterioration problems may occur within a few months, or even less if the gasoline was not fresh when you filled the fuel tank.

The *Distributor's Limited Warranty (U.S.) / Distributor's Warranty (C.A.)* does not cover fuel system damage or engine performance problems resulting from neglected storage preparation.
You can extend fuel storage life by adding a gasoline stabilizer that is formulated for that purpose, or you can avoid fuel deterioration problems by draining the fuel tank.

STORAGE

Service according to the table below:

STORAGE TIME	RECOMMENDED SERVICE PROCEDURE TO PREVENT HARD STARTING
Less than 1 month	No preparation required.
1 month to 1 year	Fill with fresh gasoline and add gasoline stabilizer*.
1 year or more	Fill with fresh gasoline and add gasoline stabilizer*. Remove the spark plug. Put a teaspoon of engine oil into the cylinder. Turn the engine slowly with the pull rope to distribute the oil. Reinstall the spark plug. Change the engine oil (see page 76). After removal from storage, drain the stored gasoline into a suitable container, and fill with fresh gasoline before starting.
*Use gasoline stabilizers that are formulated to extend storage life. Follow the manufacturer's instructions for use. Contact your authorized Honda Power Equipment dealer for stabilizer recommendations.	

DRAINING THE FUEL TANK

⚠ WARNING

Gasoline is highly flammable and explosive.

You can be burned or seriously injured when handling fuel.

- Stop the engine and let it cool before handling fuel.
- Keep heat, sparks, and flame away.
- Handle fuel only outdoors.
- Keep away from your vehicle.
- Wipe up spills immediately.

Unscrew the fuel tank cap, remove the fuel strainer, and empty the fuel tank into an approved gasoline container. We recommend using a commercially available gasoline hand pump to empty the tank. Do not use an electric pump. Siphon the gasoline by inserting the tip of the hand pump into the side of the pump guard, as shown in the figure below. Reinstall the fuel strainer and the fuel tank cap.

AN1 type

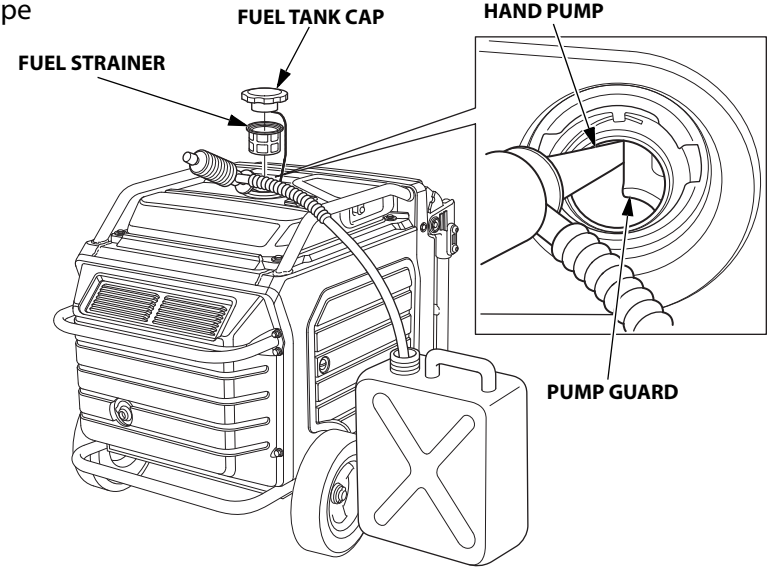

AC1 type

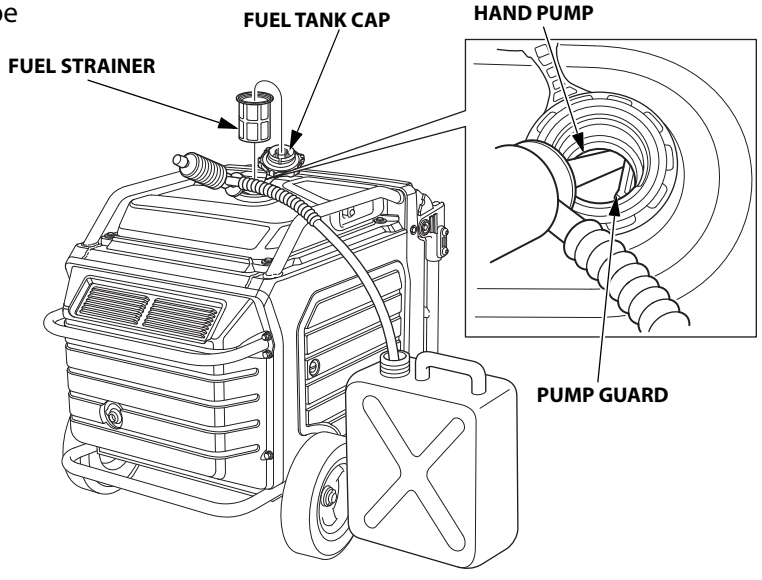

Engine Oil
Change the engine oil (see page 76).

Engine Cylinder
1. Remove the spark plug (see page 79).
2. Pour a teaspoon (5 cc) of clean engine oil into the cylinder.
3. Pull the starter rope several times to distribute the oil in the cylinder.
4. Reinstall the spark plug (see page 79).
5. Slowly pull the starter grip until resistance is felt. At this point, the piston is coming up on its compression stroke and both the intake and exhaust valves are closed. Storing the engine in this position will help to protect it from internal corrosion. Return the starter grip gently.

Battery
Charge the battery before storing the generator (see page 85).

STORAGE PRECAUTIONS

If your generator will be stored with gasoline in the fuel tank, it is important to reduce the hazard of gasoline vapor ignition.

Select a well-ventilated storage area away from any appliance that operates with a flame, such as a furnace, water heater, or clothes dryer. Also avoid any area with a spark-producing electric motor, or where power tools are operated.

If possible, avoid storage areas with high humidity, because that promotes rust and corrosion.

Place the generator on a level surface. Tilting can cause fuel or oil leakage.

With the engine and exhaust system cool, cover the generator to keep out dust. A hot engine and exhaust system can ignite or melt some materials.

Do not use a plastic sheet as a dust cover. A nonporous cover will trap moisture around the generator, promoting rust and corrosion.

Fully charge the battery. Recharge the battery once a month (see page 85).

REMOVAL FROM STORAGE

Check your generator as described in the "BEFORE OPERATION" chapter of this manual (see page 45).

If the generator was stored for 1 year or longer, drain the fuel tank (see page 89) and refuel with fresh gasoline. If you keep a container of gasoline for refueling, be sure that it contains only fresh gasoline. Gasoline oxidizes and deteriorates over time, causing hard starting.

If the cylinder was coated with oil during storage preparation, the engine may smoke briefly at startup. This is normal.

TRANSPORTING

⚠ CAUTION

An engine that has been running will remain very hot for a period of time.

A hot engine and exhaust system can burn you and ignite some material.

If the generator has been used, allow it to cool for at least 15 minutes before loading the generator on the transport vehicle.

To prevent spillage when transporting, the generator should be secured upright in its normal operating position.

NOTICE

Do not lay the generator on its side when moving, storing, or operating it. Oil or fuel may leak and damage the engine or your property.

Do not operate the generator while it is being transported or while it is mounted to any type of vehicle, trailer, or boat.

Take care not to drop or strike the generator when transporting. Do not place heavy objects on the generator.

When using ropes or tie-down straps to secure the generator for transportation, be sure to only use the frame bars as attachment points. Do not fasten ropes or straps to any portions of the generator body or the folding transport handle.

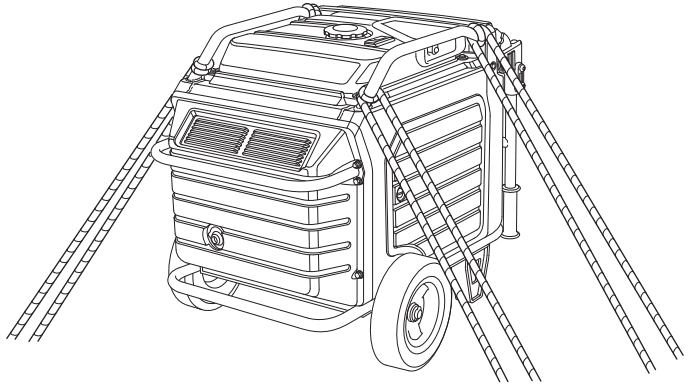

TAKING CARE OF UNEXPECTED PROBLEMS

ENGINE WILL NOT START

Possible Cause	Correction
MAIN switch is in the OFF position.	Turn MAIN switch to the ON position (see page 26).
MAIN switch is left in the ON position without starting the engine within 30 minutes.	Turn MAIN switch to the OFF position once and then to the ON position.
CO-MINDER® (CO Shut-off System) is detecting high carbon monoxide (CO) levels around the generator.	Review the location of the generator, such as by placing it in a well-ventilated outdoor location (see page 28). When the engine is stopped automatically by CO-MINDER, press the CO-MINDER reset button to restart the engine (see page 56).
Out of fuel.	Refuel (see page 21).
Bad fuel, generator stored without treating or draining gasoline, or refueled with bad gasoline.	Drain fuel tank (see page 89). Refuel with fresh gasoline (see page 21).
Low engine oil level caused Oil Alert to stop engine.	Turn the MAIN switch to the OFF position. Add engine oil. Then turn the MAIN switch to the ON position and restart the engine.
Spark plug wet with fuel (flooded engine).	• Turn MAIN switch to OFF position and pull starter grip swiftly five times or more. This may dry spark plug. • If it still not start, remove spark plug and dry.
Spark plug faulty, fouled, or improperly gapped.	Gap or replace spark plug (see page 79). Reinstall spark plug.
Fuel filter restricted, fuel system malfunction, fuel pump failure, ignition malfunction, valves stuck, etc.	Take the generator to an authorized Honda Power Equipment dealer, or refer to the shop manual.

ENGINE LACKS POWER

Possible Cause	Correction
Air filter restricted.	Clean or replace air filter (see pages 50, 78).
Bad fuel, generator stored without treating or draining gasoline, or refueled with bad gasoline.	Drain fuel tank (see page 89). Refuel with fresh gasoline (see page 21).
Fuel filter restricted, fuel system malfunction, fuel pump failure, ignition malfunction, valves stuck, etc.	Take the generator to an authorized Honda Power Equipment dealer, or refer to the shop manual.

NO POWER AT THE AC RECEPTACLES

Possible Cause	Correction
OUTPUT indicator is OFF, and OVERLOAD ALARM indicator is ON.	Check AC load. Stop and restart the engine.
	Check the cooling air inlet. Stop and restart the engine.
AC Circuit protector(s) tripped.	Check AC load and reset AC circuit protector(s) (see page 31).
GFCI system activated.	• GFCI receptacle (120 V 20 A duplex receptacle): Test GFCI and press the GFCI RESET button (see page 57). • Replace or repair power tool or appliance.
Faulty power tool or appliance.	Replace or repair power tool or appliance. Stop and restart the engine.
Faulty generator.	Take the generator to an authorized Honda Power Equipment dealer, or refer to the shop manual.

ENGINE AUTOMATICALLY STOP AND THE CO ALARM INDICATOR FLASHING

Possible Cause	Correction
CO concentration around the generator is high.	Review the location of the generator, and place it in a well-ventilated outdoor location (see page 28). When the engine is stopped automatically by CO-MINDER®, press the CO-MINDER reset button to restart the engine (see page 56).

ENGINE AUTOMATICALLY STOP AND THE FAULT/CO SENSOR LIFE INDICATOR FLASHING

Possible Cause	Correction
CO sensor malfunction.	If the engine cannot be started and the CO ALARM indicator flashes, even if the location of the generator has changed, there may be a CO-MINDER® malfunction. Consult an authorized Honda Power Equipment dealer.
CO sensor may have reached the end of its useful lifespan (see page 29).	Consult an authorized Honda Power Equipment dealer.

FAULT/CO SENSOR LIFE INDICATOR FLASHING WHEN RUNNING THE ENGINE

Possible Cause	Correction
CO sensor may reach the end of its useful lifespan (see page 29).	Consult an authorized Honda Power Equipment dealer for replacement.

TECHNICAL INFORMATION

SERIAL NUMBER AND TYPE LOCATION

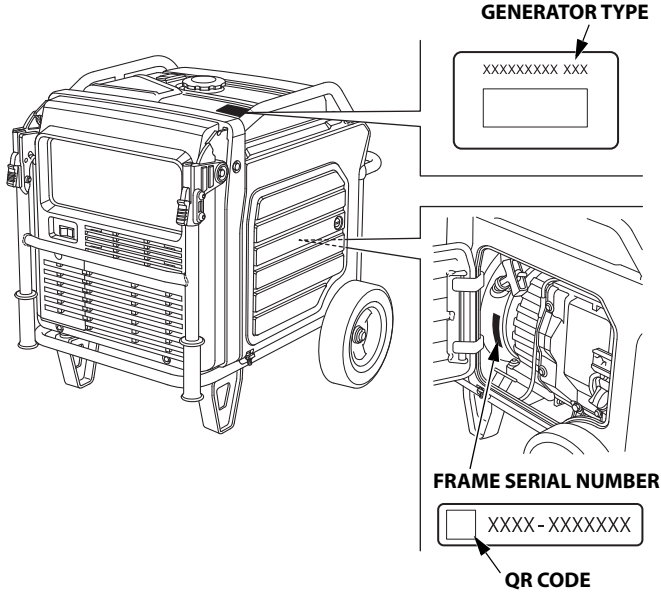

Record the frame serial number and date purchased in the spaces below. You will need this information when ordering parts and when making technical or warranty inquiries.

Frame serial number:_____

Date purchased:_____

Entering the frame serial number of the generator is required during the first *Bluetooth*® connection. Read the QR code or enter the 12 digit frame serial number contained "- (hyphen)".
Record the password set for the *Bluetooth*® connection in the space below. Do not write or attach the password on the generator.

Bluetooth® password:_____

EMISSION CONTROL SYSTEM INFORMATION

Source of Emissions

The combustion process produces carbon monoxide, oxides of nitrogen, and hydrocarbons. Control of hydrocarbons and oxides of nitrogen is very important because, under certain conditions, they react to form photochemical smog when subjected to sunlight. Carbon monoxide does not react in the same way, but it is toxic.

Honda utilizes appropriate air/fuel ratios and other emissions control systems to reduce the emissions of carbon monoxide, oxides of nitrogen, and hydrocarbons.

Additionally, Honda fuel systems utilize components and control technologies to reduce evaporative emissions.

The U.S. and California Clean Air Acts, and Environment and Climate Change Canada (ECCC)

U.S. EPA, California and Canadian regulations require all manufacturers to furnish written instructions describing the operation and maintenance of emission control systems.

The following instructions and procedures must be followed in order to keep the emissions from your Honda engine within the emission standards.

Tampering and Altering

NOTICE

Tampering is a violation of federal and California law.

Tampering with or altering the emission control system may increase emissions beyond the legal limit. Among those acts that constitute tampering are:

- Removal or alteration of any part of intake, fuel, or exhaust systems.
- Alterations that would cause the engine to operate outside its design parameters.

Problems That May Affect Emissions

If you are aware of any of the following symptoms, have your engine inspected and repaired by your authorized Honda Power Equipment dealer.

- Hard starting or stalling after starting.
- Rough idle.
- Misfiring or backfiring under load.
- Afterburning (backfiring).
- Black exhaust smoke or high fuel consumption.

Replacement Parts

The emissions control systems on your new Honda engine were designed, built, and certified to conform with EPA, California (models certified for sale in California only), and Canadian emissions regulations. We recommend the use of Honda Genuine parts whenever you have maintenance done. These original design replacement parts are manufactured to the same standards as the original parts, so you can be confident of their performance. Honda cannot deny coverage under the emission warranty solely for the use of non-Honda replacement parts or service performed at a location other than an authorized Honda dealership; you may use comparable parts certified by the EPA, CARB or ECCC, as applicable, and have service performed at non-Honda locations. However, the use of replacement parts that are not of the original design and quality may impair the effectiveness of your emissions control system.

A manufacturer of an aftermarket part assumes the responsibility that the part will not adversely affect emissions performance. The manufacturer or rebuilder of the part must certify that use of the part will not result in a failure of the engine to comply with emissions regulations.

Maintenance

As the power equipment engine owner, you are responsible for completing all required maintenance listed in your owner's manual. Honda recommends that you retain all receipts covering maintenance on your power equipment engine, but Honda cannot deny warranty coverage solely for the lack of receipts or for your failure to ensure that all scheduled maintenance has been completed.

Follow the "MAINTENANCE SCHEDULE" on page 75.

Remember that this schedule is based on the assumption that your Honda engine product will be used for its designed purpose. Sustained high-load or high-temperature operation, or use in dusty conditions, will require more frequent service.

Air Index
(Models certified for sale in California)
An Air Index Information label is applied to engines certified to an emission durability time period in accordance with the requirements of the California Air Resources Board.

The bar graph is intended to provide you, our customer, the ability to compare the emissions performance of available engines. The lower the Air Index, the less pollution.

The durability description is intended to provide you with information relating to the engine's emission durability period. The durability period of the engine is 1,000 hours. See your "Emission Control System Warranty" (see page 114) for additional information.

Emission Control Information
An Emission Control Information label describes the engine's emission control systems. The specification of the evaporative emission control system is represented by the abbreviated symbol "CM" and means it has a canister as venting control and the fuel tank barrier is made of metal.

SPECIFICATIONS

Dimensions

Model	EU7000iSN	
Type	**AN1**	**AC1**
Description code	EEJD	
Length [Handle in up position]	33.4 in (848 mm) [47.2 in (1,198 mm)]	
Width	27.6 in (700 mm)	
Height	28.4 in (721 mm)	28.7 in (730 mm)
Dry mass [weight]*	263.2 lbs (119.4 kg)	271.2 lbs (123.0 kg)

* With battery

Engine

Model	GX390T2
Engine type	4-stroke, overhead valve, single cylinder
Displacement [Bore×Stroke]	23.7 cu-in (389 cm^3) [3.5×2.5 in (88×64 mm)]
Compression ratio	8.2:1
Engine speed	2,400–3,600 rpm <with Eco Throttle switch ON> 3,300-3,600 rpm <with Eco Throttle switch OFF>
Cooling system	Forced air
Ignition system	Full transistor
Engine oil capacity	1.2 US qt (1.1 L)
Fuel tank capacity	5.07 US gal (19.2 L)
Spark plug	BPR6ES (NGK)

Generator

AC output	Rated voltage	120 V/240 V
	Rated frequency	60 Hz
	Rated current	45.8 A/22.9 A
	Rated output	5.5 kVA
	Maximum output	7.0 kVA

Tune-up Specifications

ITEM	SPECIFICATION	MAINTENANCE
Spark plug gap	0.028–0.031 in (0.7–0.8 mm)	Refer to page 80.
Valve clearance (cold)	IN: 0.15±0.02 mm EX: 0.20±0.02 mm	See your authorized Honda dealer.
Other specifications	No other adjustments needed.	

Specifications are subject to change without notice.

WIRING DIAGRAM

AN1 type

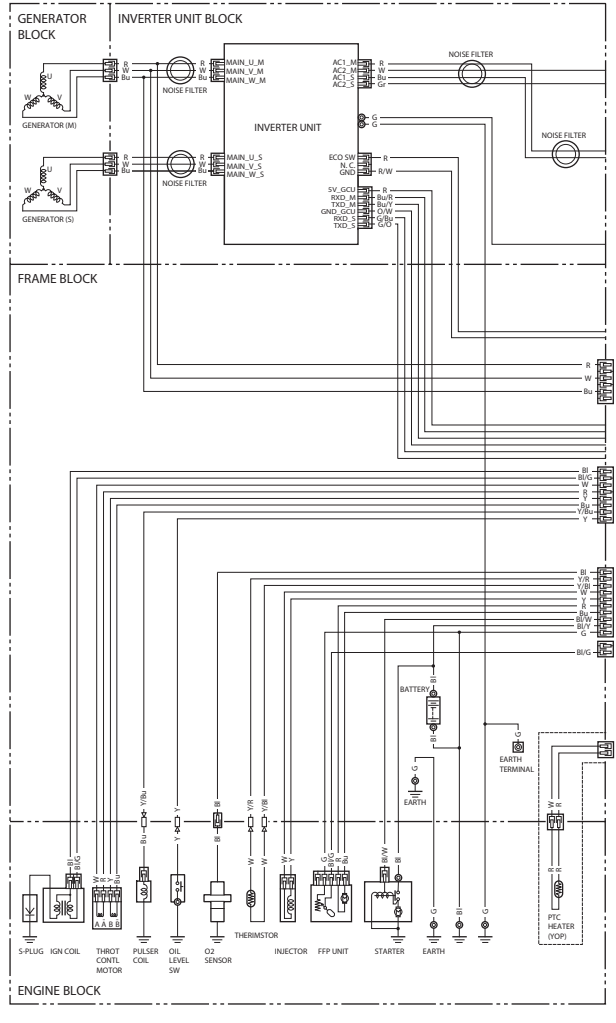

TECHNICAL INFORMATION

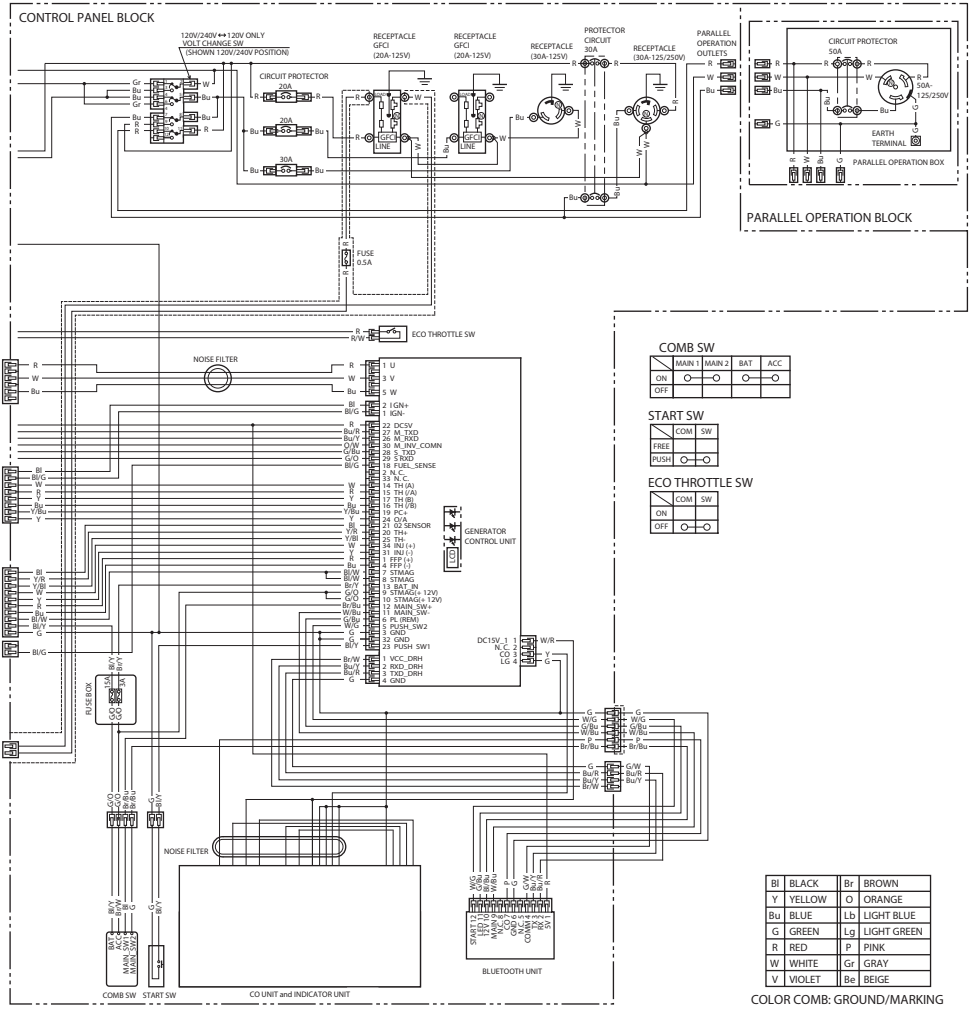

COMB SW

	MAIN 1	MAIN 2	BAT	ACC
ON	○	○	○	○
OFF				

START SW

	COM	SW
FREE		
PUSH	○	○

ECO THROTTLE SW

	COM	SW
ON		
OFF	○	○

Bl	BLACK	Br	BROWN
Y	YELLOW	O	ORANGE
Bu	BLUE	Lb	LIGHT BLUE
G	GREEN	Lg	LIGHT GREEN
R	RED	P	PINK
W	WHITE	Gr	GRAY
V	VIOLET	Be	BEIGE

COLOR COMB: GROUND/MARKING

AC1 type

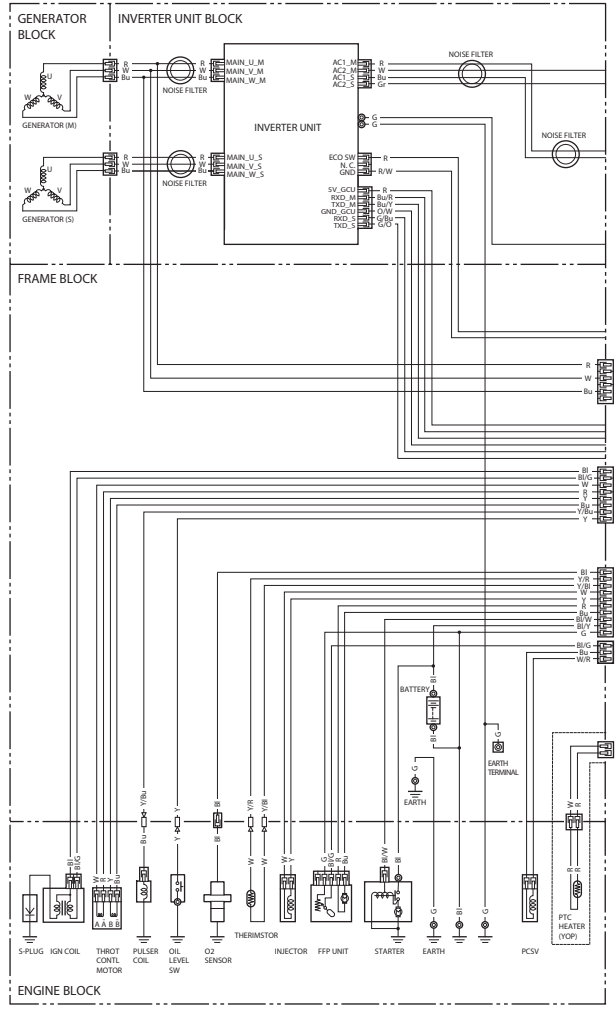
GENERATOR BLOCK
INVERTER UNIT BLOCK
GENERATOR (M)
GENERATOR (S)
NOISE FILTER
INVERTER UNIT
MAIN_U_M
MAIN_V_M
MAIN_W_M
MAIN_U_S
MAIN_V_S
MAIN_W_S
AC1_M
AC2_M
AC1_S
AC2_S
ECO SW
N.C
GND
5V_GCU
RXD_M
TXD_M
GND_GCU
RXD_S
TXD_S
FRAME BLOCK
BATTERY
EARTH
EARTH TERMINAL
S-PLUG
IGN COIL
THROT CONTL MOTOR
PULSER COIL
OIL LEVEL SW
O2 SENSOR
THERIMSTOR
INJECTOR
FFP UNIT
STARTER
PCSV
PTC HEATER (YOP)
ENGINE BLOCK

TECHNICAL INFORMATION

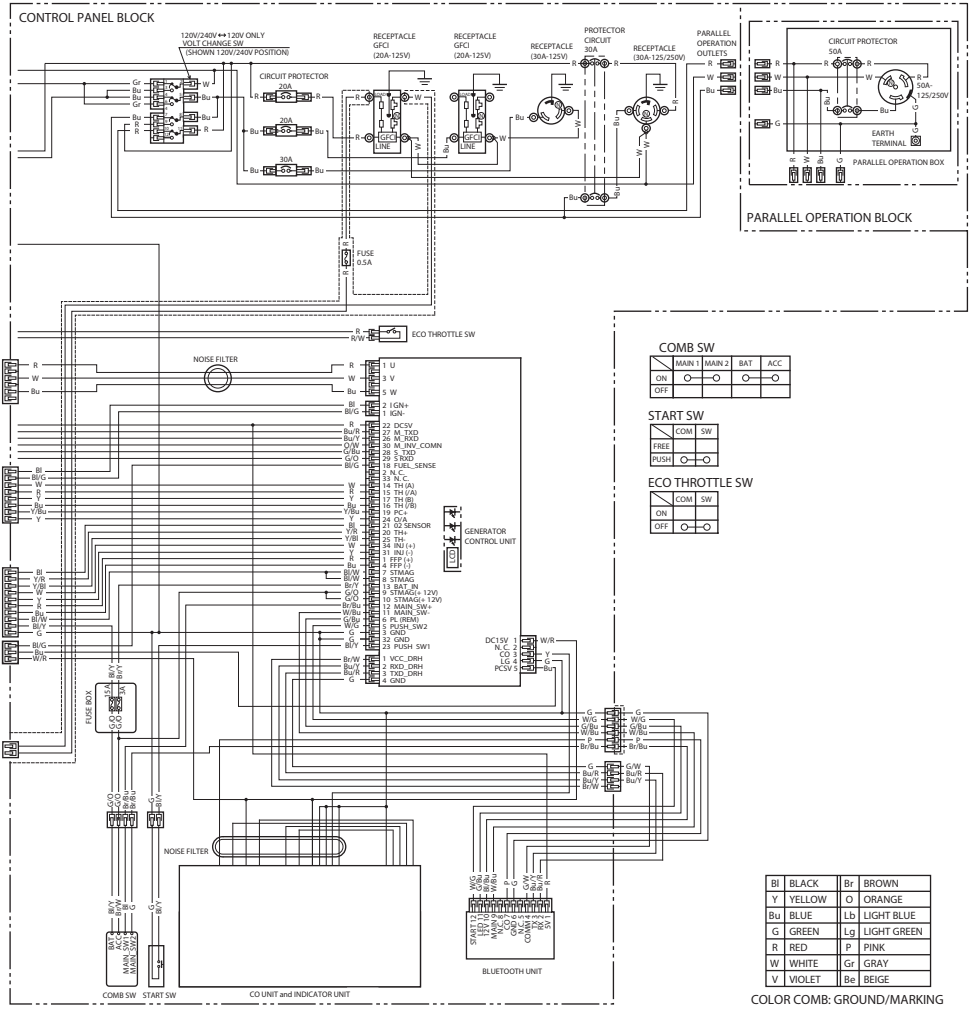

COMB SW

	MAIN 1	MAIN 2	BAT	ACC
ON	○	○	○	○
OFF				

START SW

	COM	SW
FREE		
PUSH	○	○

ECO THROTTLE SW

	COM	SW
ON		
OFF	○	○

Bl	BLACK	Br	BROWN
Y	YELLOW	O	ORANGE
Bu	BLUE	Lb	LIGHT BLUE
G	GREEN	Lg	LIGHT GREEN
R	RED	P	PINK
W	WHITE	Gr	GRAY
V	VIOLET	Be	BEIGE

COLOR COMB: GROUND/MARKING

CONSUMER INFORMATION

DEALER LOCATOR INFORMATION

To find an authorized Honda Servicing Dealer anywhere in the United States:
Visit our website:
http://powerequipment.honda.com/dealer-locator

Honda PUBLICATIONS

Shop Manual

This manual covers complete maintenance and overhaul procedures.
It is intended to be used by a skilled technician.
Available through your Honda dealer or
visit http://powerequipment.honda.com/support/shop-manuals

Parts Catalog

This manual provides complete, illustrated parts lists for your generator. Visit peparts.honda.com for free online access to the parts catalog. It is also available for purchase in paper form through your Honda dealer or by visiting:
https://publications.powerequipment.honda.com/power-equipment

Accessories Catalog

Your authorized Honda Power Equipment dealer offers a wide selection of accessories (optional equipment) to make your generator even more useful.
Visit http://powerequipment.honda.com/generators/accessories and click on See all generator accessories to see the entire catalog of accessories.

CONSUMER INFORMATION

CUSTOMER SERVICE INFORMATION

Honda Power Equipment dealership personnel are trained professionals. They should be able to answer any question you may have. If you encounter a problem that your dealer does not solve to your satisfaction, please discuss it with the dealership's management.
The Service Manager or General Manager can help. Almost all problems are solved in this way.

If you are dissatisfied with the decision made by the dealership's management, contact the Honda Power Equipment Customer Relations Office. You can write to:

American Honda Motor Co., Inc.
Power Equipment Division
Customer Relations Office
4900 Marconi Drive
Alpharetta, Georgia 30005-8847

Or telephone: (770) 497-6400
1-888-888-3139 (toll free)
9:00 am to 7:30 pm EST

To email Honda, visit
powerequipment.honda.com/support/contact-us

When you write or call, please give us this information:

- Model and serial numbers (see page 96)
- Name of the dealer who sold the generator to you
- Name and address of the dealer who services your generator
- Date of purchase
- Your name, address, and telephone number
- A detailed description of the problem

Distributor's Limited Warranty

This warranty is limited to the following Honda products when distributed by American Honda Motor Co., Inc., Power Sports and Products Division, 4900 Marconi Drive, Alpharetta, Georgia 30005. **The following warranty applies to products manufactured on or after April 1, 2023.**

PRODUCTS COVERED BY THIS WARRANTY:	**LENGTH OF WARRANTY: (1)** (FROM DATE OF ORIGINAL RETAIL PURCHASE)	
	PRIVATE RESIDENTIAL (2)	**COMMERCIAL/ RENTAL/INSTITUTIONAL**
Generators	36 months	12 months
The Parts, Accessories, and Apparel warranty is on page 112		

(1) Length of Warranty: Batteries supplied with applicable products as standard, original equipment are covered by this warranty for a period of 12 months (private residential) or 3 months (commercial/rental/institutional use) from the date of original retail product purchase.

(2) Private residential: Used in maintaining owner's primary and/or secondary residence. Any other use, including but not limited to informal "for hire" use, is considered commercial/rental/institutional use.

To Qualify for This Warranty:
The product must be purchased in the United States, Puerto Rico, or the U.S. Virgin Islands from American Honda or a dealer authorized by American Honda to sell those products. This warranty applies to first retail purchaser and each subsequent owner during the applicable warranty time period, unless noted otherwise.

What American Honda Will Repair or Replace Under Warranty:
American Honda will repair or replace, at its option, any part that is proven to be defective in material or workmanship under normal use during the applicable warranty time period. Warranty repairs and replacements will be made without charge for parts or labor. Anything replaced under warranty becomes the property of American Honda Motor Co., Inc. All parts replaced under warranty will be considered as part of the original product, and any warranty on those parts will expire coincident with the original product warranty.

CONSUMER INFORMATION

To Obtain Warranty Service:
You must, at your expense, take the Honda Power Equipment product, accessory, replacement part, apparel, or the power equipment on which the accessory or replacement part is installed, and proof of purchase to any Honda Power Equipment dealer in the United States, Puerto Rico, or the U.S. Virgin Islands who is authorized to sell and/or service that product, during the dealer's normal business hours. To locate a dealer near you, visit our web site at http://powerequipment.honda.com and click on Find a Dealer.
If you are unable to obtain warranty service or are dissatisfied with the warranty service you receive, contact the owner of the dealership involved; normally this will resolve the problem. However, if you should require further assistance, write or call the Power Equipment Customer Relations Department of American Honda Motor Co., Inc. at the following address:

American Honda Motor Co., Inc.
Power Equipment Customer Relations Dept.
4900 Marconi Drive
Alpharetta, GA 30005-8847 Telephone: (770) 497-6400

Exclusions:

1. Any damage or deterioration resulting from the following:
   - Neglect of the periodic maintenance as specified in the product owner's manual
   - Improper repair or maintenance
   - Operating methods other than those indicated in the product owner's manual
   - Increasing engine speed beyond factory specification
   - The use of non-genuine Honda parts, accessories, lubricants, and fluids other than those approved by Honda
   - Exposure of the product to soot and smoke, chemical agents, bird droppings, sea water, salt, or other corrosive environments
   - Collision, fuel contamination or deterioration, neglect, unauthorized alteration, misuse, incorporation or use of unsuitable attachments or parts
   - Normal wear and tear (including, but not limited to, normal fading of painted or plated surfaces, sheet peeling, and other natural deterioration)
2. Consumable parts: Honda does not warrant parts deterioration due to normal wear and tear. The following parts are not covered by this warranty unless they are needed during another repair covered under this warranty: spark plug, fuel filter, air cleaner element, clutch disc, tire, wheel bearing, recoil starter rope, cable, belt, cutter blade, oil, and grease.
3. Cleaning, adjustment, and normal periodic maintenance work (carburetor cleaning, engine oil draining, blade sharpening, belt and cable adjustments).
4. Any product that has ever been declared a total loss or sold for salvage by a financial institution or insurer.
5. Auger and paddle assemblies, skid shoes, and scraper bars of snow throwers/snow blowers, tiller tines of roto-tillers, and mower blades and mower deck housings are specifically not warranted against impact damage including, but not limited to, abrasive damage.

Disclaimer of Consequential Damage and Limitation of Implied Warranties:
American Honda disclaims any responsibility for loss of time or use of the product, transportation, commercial loss, or any other incidental or consequential damage. Any implied warranties are limited to the duration of this written limited warranty. Some states do not allow limitations on how long an implied warranty lasts and/or do not allow the exclusion or limitation of incidental or consequential damages, therefore the above exclusions and limitations may not apply to you. This warranty gives you specific legal rights, and you may also have other rights, which vary from state to state.

Honda Parts, Accessories, and Apparel
This warranty is limited to Honda Power Equipment parts, accessories, and apparel when distributed by American Honda Motor Co., Inc., 4900 Marconi Drive, Alpharetta, Georgia 30005-8847.

PRODUCTS COVERED BY WARRANTY:	LENGTH OF WARRANTY: (FROM DATE OF ORIGINAL RETAIL PURCHASE)	
	PRIVATE RESIDENTIAL	COMMERCIAL/ RENTAL/INSTITUTIONAL
Parts	6 months	3 months
Batteries	6 months	3 months
Accessories	12 months	3 months
Apparel	6 months	3 months

To Qualify for This Warranty:
1. The parts, accessories, or apparel must be purchased from American Honda or a dealer authorized by American Honda to sell those products in the United States, Puerto Rico, and the U.S. Virgin Islands. Parts and accessories must be purchased for installation on original Honda equipment or engines to be eligible for warranty coverage.
   Installing parts and accessories on non-Honda products or engines voids this warranty.
2. You must be the first retail purchaser. This warranty is not transferable to subsequent owners.

What American Honda Will Repair or Replace Under Warranty:
American Honda will repair or replace, at its option, any Honda Power Equipment parts, accessories, or apparel that are proven to be defective in material or workmanship under normal use during the applicable warranty time period. Anything replaced under warranty becomes the property of American Honda Motor Co., Inc. The warranty on all parts, accessories, and apparel replaced under warranty will expire coincident with the original warranty on the replaced parts, accessories, or apparel.
Parts and accessories installed by a dealer who is authorized by American Honda to sell them will be repaired or replaced under warranty without charge for parts or labor. If installed by anyone else, parts and accessories will be repaired or replaced under warranty without charge for parts, but any labor charges will be the responsibility of the purchaser.
Apparel will be repaired or replaced under warranty without any charge.

To Obtain Warranty Service:
You must, at your expense, take the Honda Power Equipment part, accessory, or apparel, or the Honda Power Equipment on which the accessory or part is installed, and proof of purchase to any Honda Power Equipment dealer in the United States, Puerto Rico, or the U.S. Virgin Islands who is authorized to sell that product, during the dealer's normal business hours.
To locate a dealer near you, go to our web site at http://PowerEquipment.Honda.com and click on Find a Dealer.
If you are unable to obtain warranty service or are dissatisfied with the warranty service you receive, contact the owner of the dealership involved; normally this will resolve the problem. However, if you should require further assistance, write or call the Power Equipment Customer Relations Department of American Honda Motor Co., Inc. Refer to page 110 for contact information.

Exclusions:
This warranty does not extend to parts, accessories, or apparel affected or damaged by collision, normal wear, use in an application for which the product was not designed, or any other misuse, neglect, incorporation or use of unsuitable attachments or parts, unauthorized alteration, improper installation, or any causes other than defects in material or workmanship of the product. Installing parts and accessories on non-Honda products or engines voids this warranty.

Disclaimer of Consequential Damage and Limitation of Implied Warranties:
American Honda disclaims any responsibility for loss of time or use of the product, or the power equipment on which the product is installed, transportation, commercial loss, or any other incidental or consequential damage. Any implied warranties are limited to the duration of this written warranty. Some states do not allow limitations on how long an implied warranty lasts and/or do not allow the exclusion or limitation of incidental or consequential damages, so the above exclusions and limitations may not apply to you.
This warranty gives you specific legal rights, and you may also have other rights, which vary from state to state.

Emission Control System Warranty

Your new Honda Power Equipment engine complies with the U.S. EPA, Environment Canada, and State of California (models certified for sale in California only) emission regulations. American Honda Motor Co., Inc. provides the emission warranty coverage for engines in the United States and its territories. Honda Canada Inc. provides the emission warranty for engines in the 13 provinces and territories of Canada. In the remainder of this Emission Control System Warranty, American Honda Motor Co., Inc. and Honda Canada Inc. will be referred to as Honda.

CALIFORNIA EXHAUST AND EVAPORATIVE EMISSIONS CONTROL WARRANTY STATEMENT YOUR WARRANTY RIGHTS AND OBLIGATIONS

The California Air Resources Board and Honda are pleased to explain the exhaust and evaporative emissions ("emissions") control system warranty on your 2026 and later Honda Power Equipment engine. In California, new equipment that use small off-road engines must be designed, built, and equipped to meet the State's stringent anti-smog standards. Honda must warrant the emissions control system on your power equipment engine for the periods of time listed below provided there has been no abuse, neglect, or improper maintenance of your small off-road engine or equipment leading to the failure of the emissions control system.

Your emissions control system may include parts such as the carburetor or fuel-injection system, the ignition system, catalytic converter, fuel tanks, fuel lines (for liquid fuel and fuel vapors), fuel caps, valves, canisters, filters, clamps and other associated components. Also included may be hoses, belts, connectors, and other emission-related assemblies (see page 118 for additional covered parts).

Where a warrantable condition exists, Honda will repair your power equipment engine at no cost to you including diagnosis, parts and labor.

MANUFACTURER'S WARRANTY COVERAGE:

The exhaust and evaporative emissions control system on your Honda power equipment engine is warranted for two years. If any emissions-related part on your Honda power equipment engine is defective, the part will be repaired or replaced by Honda.

OWNER'S WARRANTY RESPONSIBILITY:

- As the power equipment engine owner, you are responsible for the performance of the required maintenance listed in your owner's manual. Honda recommends that you retain all receipts covering maintenance on your power equipment engine, but Honda cannot deny warranty coverage solely for the lack of receipts or for your failure to ensure the performance of all scheduled maintenance.
- As the power equipment engine owner, you should however be aware that Honda may deny you warranty coverage if your power equipment engine or a part has failed due to abuse, neglect, improper maintenance, or unapproved modifications.
- You are responsible for presenting your power equipment engine to a Honda Power Equipment servicing dealer as soon as the problem exists. The warranty repairs shall be completed in a reasonable amount of time, not to exceed 30 days.

If you have any questions regarding your warranty rights and responsibilities, you should contact the Honda office in your region:

American Honda Motor Co., Inc.
Power Equipment Customer Relations
4900 Marconi Drive
Alpharetta, Georgia 30005-8847
Telephone: (888) 888-3139
Email: powerequipmentemissions@ahm.honda.com

or

Honda Canada Inc.
Power Equipment Customer Relations
180 Honda Blvd.
Markham, ON, L6C 0H9
Telephone: (888) 946-6329

YOUR WARRANTY RIGHTS AND OBLIGATIONS

Other States, U.S. territories, and Canada:
In other areas of the United States and in Canada, your engine must be designed, built, and equipped to meet the U.S. EPA and Environment Canada emission standards for spark-ignited engines at or below 19 kilowatts.

Specific Honda products that do not meet the California emissions regulations can be identified by a "California: Not for sale or use" or "California: Only for use in Farming or Construction Equipment" decal.

All of the United States and Canada:
The exhaust and evaporative emissions control system on your Honda power equipment engine sold in the United States and Canada is warranted for two years from the date of delivery to the ultimate purchaser or the length of the Honda Distributor's Limited Warranty, whichever is longer. This warranty is transferable to each subsequent purchaser for the duration of the warranty period.

If any emissions-related part on your Honda power equipment engine is defective, the part will be repaired or replaced by Honda. All defective parts replaced under this warranty become the property of Honda. Only Honda approved replacement parts may be used in the performance of any warranty repairs and must be provided without charge to the owner. A list of warranted parts is on the reverse side of this warranty statement. All emission related parts are under warranty for the remainder of the warranty period. Normal maintenance items, such as spark plugs and filters, that are on the warranted parts list are warranted up to their required replacement interval only.

Honda will also replace other engine components damaged by a failure of any warranted part during the warranty period. Honda cannot deny coverage under the emission warranty solely for use of non-Honda replacement parts or service performed at a location other than an authorized Honda dealership; however, use of a part that is not functionally identical to the original equipment part in any respect that may in any way affect emissions (including durability) could result in denial of coverage. If such a non-Honda replacement part is used in the repair or maintenance of your engine, and an authorized Honda dealer determines it is defective or causes a failure of a warranted part, your claim for repair of your engine may be denied. If the part in question is not related to the reason your engine requires repair, your claim will not be denied.

TO OBTAIN WARRANTY SERVICE:

You must, at your own expense, take your Honda Power Equipment engine or the product on which it is installed, along with your sales registration card or other proof of original purchase date, to any Honda Power Equipment dealer who is authorized by Honda to sell and service that Honda product during their normal business hours. Claims for repair or adjustment found to be caused solely by defects in material or workmanship will not be denied because the engine was not properly maintained and used.
If you are unable to obtain emission warranty service or are dissatisfied with the warranty service you received, contact the owner of the dealership involved. Normally this should resolve your problem. However, if you require further assistance, contact the Honda office in your region:

American Honda Motor Co., Inc.
Power Equipment Customer Relations
4900 Marconi Drive
Alpharetta, Georgia 30005-8847
Telephone: (888) 888-3139
Email: powerequipmentemissions@ahm.honda.com

or

Honda Canada Inc.
Power Equipment Customer Relations
180 Honda Blvd.
Markham, ON, L6C 0H9
Telephone: (888) 946-6329

EXCLUSIONS:

Failures other than those resulting from defects in material or workmanship are not covered by this warranty. This warranty does not extend to emission control systems or parts that are affected or damaged by owner abuse, neglect, improper maintenance, or unapproved modifications.
This warranty does not cover replacement of expendable maintenance items made in connection with required maintenance service after the item's first scheduled replacement as listed in the maintenance section of the product owner's manual, such as: spark plugs and filters.

DISCLAIMER OF CONSEQUENTIAL DAMAGE AND LIMITATION OF IMPLIED WARRANTIES:

American Honda Motor Co., Inc. and Honda Canada Inc. disclaim any responsibility for incidental or consequential damages such as loss of time or the use of the power equipment, or any commercial loss due to the failure of the equipment; and any implied warranties are limited to the duration of this written warranty. This warranty is applicable only where the California, U.S. EPA, or Environment Canada emission control system warranty regulation is in effect.

EMISSION CONTROL SYSTEM WARRANTY PARTS:

SYSTEMS COVERED BY THIS WARRANTY:	PARTS DESCRIPTION:
Fuel Metering	Carburetor assembly (includes starting enrichment system), Oxygen sensor, Throttle body, Engine temperature sensor, Engine control module, Fuel injector, Fuel regulator, Intake manifold
Evaporative	Fuel tank, Fuel cap, Fuel cap tether, Fuel lines (for liquid and fuel vapors), Carbon canister, Canister mounting brackets, Fuel line fittings, Fuel strainer, Fuel valve, Fuel pump, Fuel hose joint, Canister purge line, Canister purge port connector, Evaporative emission canister purge valve
Exhaust	Catalyst, Exhaust pipe, Muffler (with catalyst), Exhaust manifold
Air Induction	Air cleaner case, Air cleaner element*
Ignition	Flywheel comp., Flywheel magneto, Ignition pulse generator, Crankshaft position sensor, Power coil, Ignition coil assembly, Ignition control module, Spark plug cap, Spark plug*
Crankcase Emission Control	Crankcase breather tube, Breather valve assembly, Cover assembly head, Oil filler cap
Miscellaneous Parts	Tubing, fittings, seals, gaskets, and clamps associated with these listed systems.

*Covered up to the first required replacement only.
See the "MAINTENANCE SCHEDULE" on page 75.

REGISTRATION

Please Register Your Generator

If your dealer did not collect registration information from you, please take a few minutes and register your purchase with Honda. This allows us to contact you with any important updates regarding your generator. Please note registration is not required to obtain warranty service. You can register your generator by visiting the Honda Power Equipment website, http://powerequipment.honda.com/support and click on Product Registration. Your information will remain confidential. It will not be released to any other company or organization.

OPTIONAL PARTS

HANGER KIT

Protect the fuel tank and frame pipe with the protector films during installation of the hanger.

1. Slide one end of the hanger under the frame pipe on the left side of the generator.

2. Slide the other end of the hanger under the frame pipe on the right side of the generator.

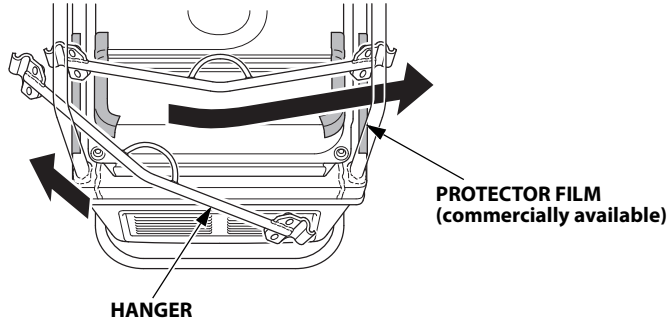

3. Slide the hanger along the frame pipes to align the center of the hanger with the recessed part on the rear side of the fuel tank.

4. Install the hanger brackets on both ends of the hanger and tighten the 8×16 mm flange bolts securely.

   Torque: 19.5 lbf·ft (26.5 N·m, 2.7 kgf·m)

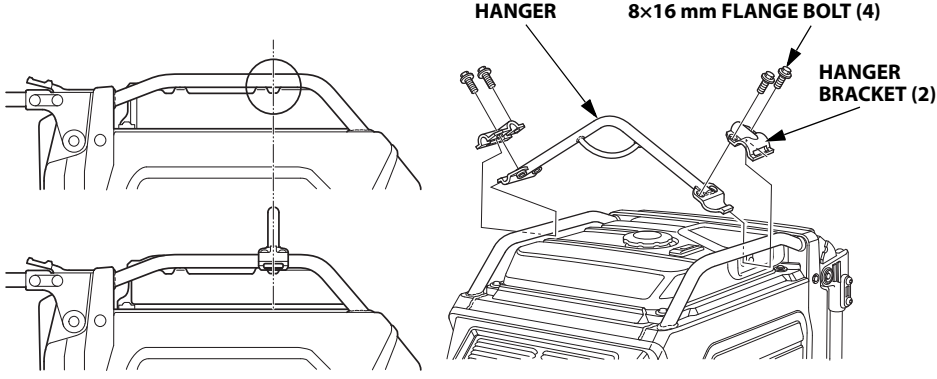

REFERENCE INFORMATION

"QR Code" is registered trademark of DENSO WAVE INCORPORATED.

The *Bluetooth* word mark and logos are registered trademarks owned by Bluetooth SIG, Inc., and any use of such marks by Honda Motor Co., Ltd., is under license. Other trademarks and trade names are those of their respective owners.

FCC Compliance Statement

This device complies with part 15 of the FCC Rules. Operation is subject to the following two conditions: (1) This device may not cause harmful interference, and (2) this device must accept any interference received, including interference that may cause undesired operation.

FCC CAUTION

Changes or modifications not expressly approved by the party responsible for compliance could void the user's authority to operate the equipment.

Responsible Party – U.S. Contact Information
Hosiden America Corp.
120 East State Parkway, Schaumburg, IL. 60173, U.S.A.
E-mail address: HOACO-Info@hoaco.com

Note: The *Bluetooth* unit included with this equipment has been tested and found to comply with the limits for a Class B digital device, pursuant to part 15 of the FCC Rules. These limits are designed to provide reasonable protection against harmful interference in a residential installation. This equipment generates, uses and can radiate radio frequency energy and, if not installed and used in accordance with the instructions, may cause harmful interference to radio communications. However, there is no guarantee that interference will not occur in a particular installation. If this equipment does cause harmful interference to radio or television reception, which can be determined by turning the equipment off and on, the user is encouraged to try to correct the interference by one or more of the following measures:

-- Reorient or relocate the receiving antenna.
-- Increase the separation between the equipment and receiver.
-- Connect the equipment into an outlet on a circuit different from that to which the receiver is connected.
-- Consult the dealer or an experienced radio/TV technician for help.

INDEX

A

AC Appliance and Power Cord 48
AC Applications 62
AC Circuit Protectors 31
AC OPERATION 60
AC Parallel Operation Applications 67
AC PARALLEL OPERATION 65
AC Receptacle Selection 63
AIR CLEANER SERVICE 78
AIR FILTER CHECK 50
Air Index 100
ARE YOU READY TO GET STARTED? 45
ASSEMBLY 14, 15

B

Battery Charging 85
Battery Installation 85
Battery Maintenance Cover and Wheel Kit 47
Battery Removal 83
BATTERY SERVICE 82
Battery 17, 90
BEFORE OPERATION 45
Bluetooth® Function 44

C

Carbon Monoxide Hazards 8
Check the Battery Voltage 46
Check the Engine 46
Check the GFCI 46
Cleaning 87
CO-MINDER® (CO Shut-off System) 28
COMPONENT & CONTROL LOCATIONS 24
Connections to a Building's Electrical System 71
CONSUMER INFORMATION 107
CONTROLS & FEATURES 24
CONTROLS 26
CUSTOMER SERVICE INFORMATION 108

D

DEALER LOCATOR INFORMATION 107
Distributor's Limited Warranty 109

E

Eco Throttle® Switch 27
ECO THROTTLE® SYSTEM 70
Electric Shock Hazards 9
Emergency Procedures 82
Emission Control Information 100
EMISSION CONTROL SYSTEM INFORMATION 97
Emission Control System Warranty 114
ENGINE AUTOMATICALLY STOP AND THE CO ALARM INDICATOR FLASHING 95
ENGINE AUTOMATICALLY STOP AND THE FAULT/CO SENSOR LIFE INDICATOR FLASHING 95
Engine Cylinder 90
ENGINE LACKS POWER 94
ENGINE OIL CHANGE 76
ENGINE OIL LEVEL CHECK 49
ENGINE OIL RECOMMENDATIONS 20
ENGINE OIL 19, 90
ENGINE START Button 26
ENGINE WILL NOT START 93

F

FAULT/CO SENSOR LIFE INDICATOR FLASHING WHEN RUNNING THE ENGINE 95
FEATURES 35
Fire and Burn Hazards 9
Foam Air Filter Cleaning 78
Folding Handle 33
Fuel Gauge (AN1 type only) 43
FUEL RECOMMENDATIONS 23
FUEL 21, 87
FUSE 86

G

GENERATOR SAFETY 7
GFCI OPERATION CHECK 57
Ground Fault Circuit Interrupter (GFCI) Receptacle 32
Ground Terminal 35

INDEX

H

HANGER KIT 120
Honda PUBLICATIONS 107
HOW TO RESTART WHEN STOPPED BY CO-MINDER® (CO SHUT-OFF SYSTEM) 56

I

i-Monitor™ 38
IMPORTANT SAFETY INFORMATION 7
INITIAL USE INSTRUCTIONS 19
INTRODUCTION 1
IS YOUR GENERATOR READY TO GO? 45

K

Knowledge 45

L

Loose Parts 15

M

MAIN Switch 26
Maintenance 99
Maintenance Covers 34
MAINTENANCE SAFETY 74
MAINTENANCE SCHEDULE 75

N

NO POWER AT THE AC RECEPTACLES 94

O

OIL ALERT®/CHECK Indicator 37
OPERATION 52
Operator Responsibility 7
OPTIONAL PARTS 120
OVERLOAD ALARM (Indicator) 36
OUTPUT Indicator 36

P

Parallel Operation Outlets 30
Please Register Your Generator 119
Power Producing Circuits 63
Problems That May Affect Emissions 98

Q

QUICK REFERENCE INFORMATION ..... inside back cover

R

REFERENCE INFORMATION 121
Refuel With Care 10
REGISTRATION 119
REMOVAL FROM STORAGE 91
Replacement Parts 99

S

SAFE OPERATING PRECAUTIONS 51
SAFETY LABEL LOCATIONS 11
Safety Precautions 74
SAFETY 14
SERIAL NUMBER AND TYPE LOCATION 96
SERVICING YOUR GENERATOR 73
Smartphone application 44
Source of Emissions 97
SPARK ARRESTER SERVICE 81
SPARK PLUG SERVICE 79
Special Requirements 72
SPECIFICATIONS 101
STANDBY POWER 71
Starter Grip 27
STARTING AND STOPPING THE ENGINE with *Bluetooth*® ENABLED SMARTPHONE 56
STARTING THE ENGINE 52
STOPPING THE ENGINE 55
STORAGE PRECAUTIONS 91
STORAGE PREPARATION 87
STORAGE 87
System Ground 71

T

TAKING CARE OF UNEXPECTED PROBLEMS 93
Tampering and Altering 98
TECHNICAL INFORMATION 96
THE IMPORTANCE OF MAINTENANCE 73
The Importance of Proper Assembly 14

The U.S. and California Clean Air Acts, and Environment and Climate Change Canada (ECCC) 97
TRANSPORTING 92
TYPE LOCATION 96

U

Unpacking 15

V

Vehicles and Transportation Hazards 10
Voltage Selector Switch 30, 64

W

Wheel Kit Installation 16
WIRING DIAGRAM 103

MEMO

MEMO

HONDA

EU7000iS
31Z37629
00X31-Z37-6290

EM5

AH 英 FM
Hi

Printed in India