ONNAIS RV Keyless Handle Installation Guide and Operating Instructions

Model：W007B

For any assistance, please contact us at:

support@onnaisafe.com

QUICK START GUIDE VIDEO

Scan the code

https://onnaisafe.com/pages/installation-guide Get

Get Start to Use Your ONNAIS RV Lock

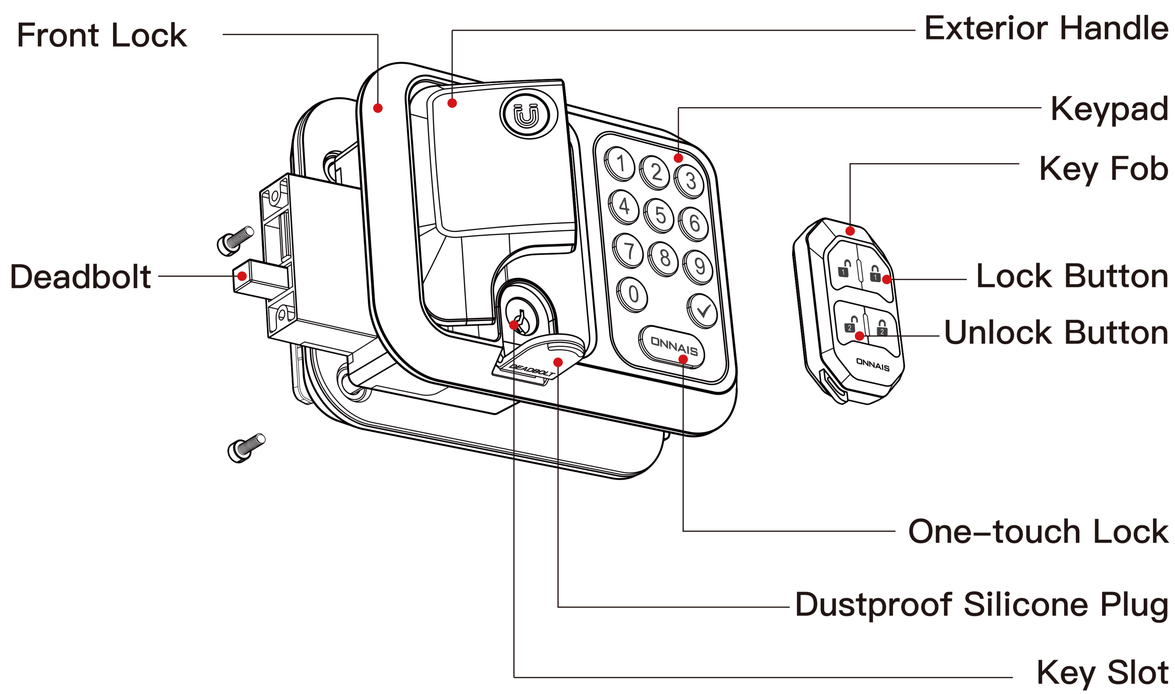

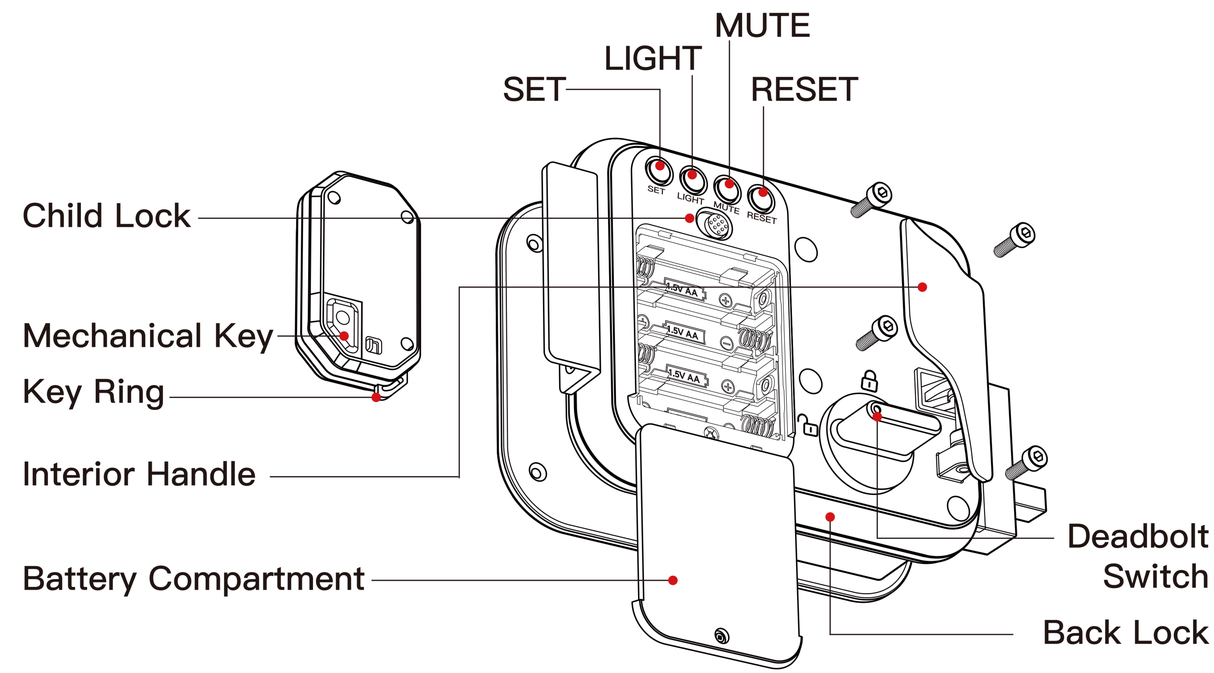

Introduction to Key Components of ONNAIS RV Keyless Lock

- 1. Exterior Handle: Features a magnetic attachment to keep the handle secure and prevent it from opening due to road bumps.
- 2. Mechanical Key: Press the button to eject the mechanical key for manual unlocking.
- 3. Mute Button: Used to turn the keypad sound on or off.
- 4. Light Button: Manually controls the keypad backlight.
- 5. Reset Button: For forgotten passwords or unpairing key fobs, please perform a factory reset. For detailed instructions, refer to the " **Reset** " section on page 8.
- 6. Deadbolt Switch: Manually extends or retracts the deadbolt to lock/unlock the door from the inside.
- 7. Child Lock: Disables the four rear buttons to prevent accidental setting changes or tampering.

Installation Process

Step 1: Insert Batteries

Please install four brand-new AA batteries. Please note that batteries are not included in the package.

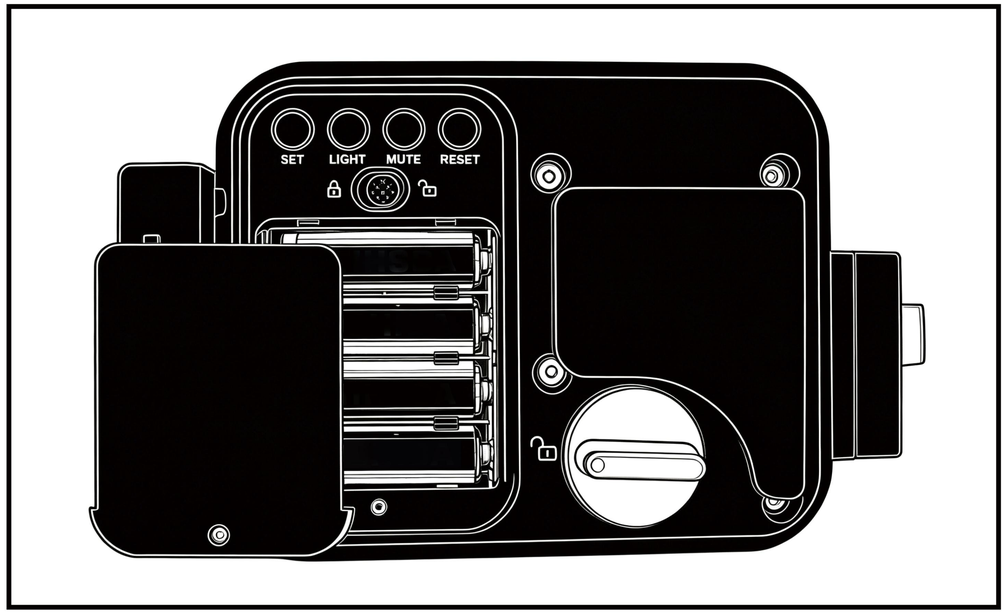

Step 2: Install the Front Lock

Attach the front keypad lock to the door.

Note: This part must be fully extended and sit flush against the door frame.

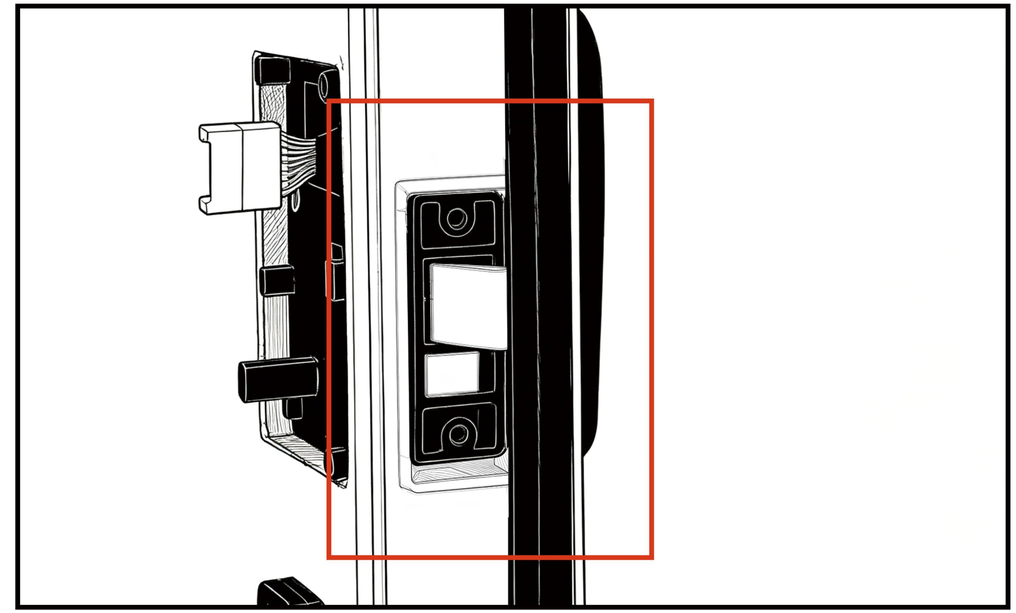

Installation Process

Step 3: Secure the Strike Plate

Align the strike plate and fasten it with screws.

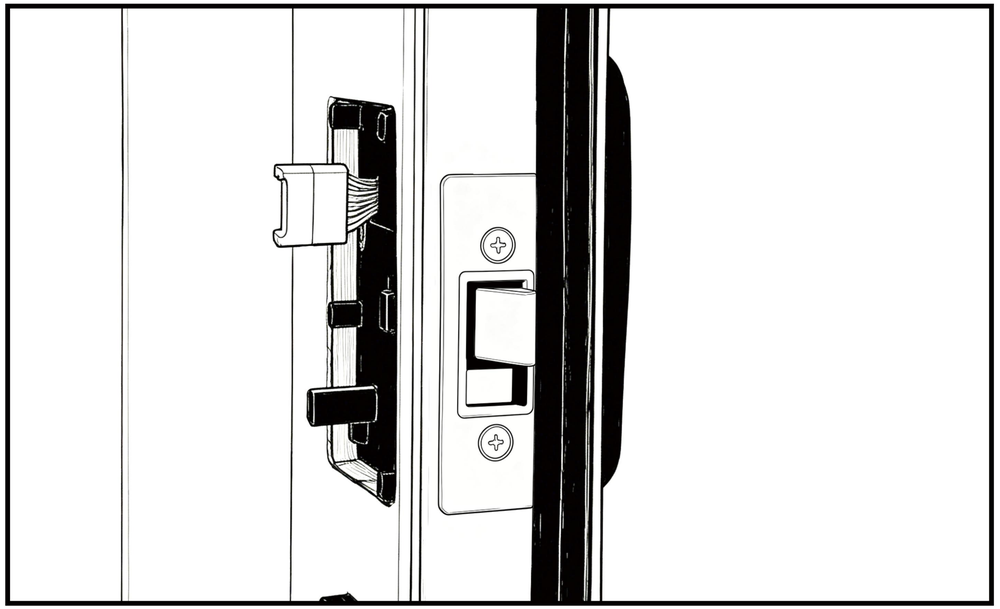

Step 4: Cable Connection

Link front and back.

Note: Do not let the lock hang by the connecting wires.

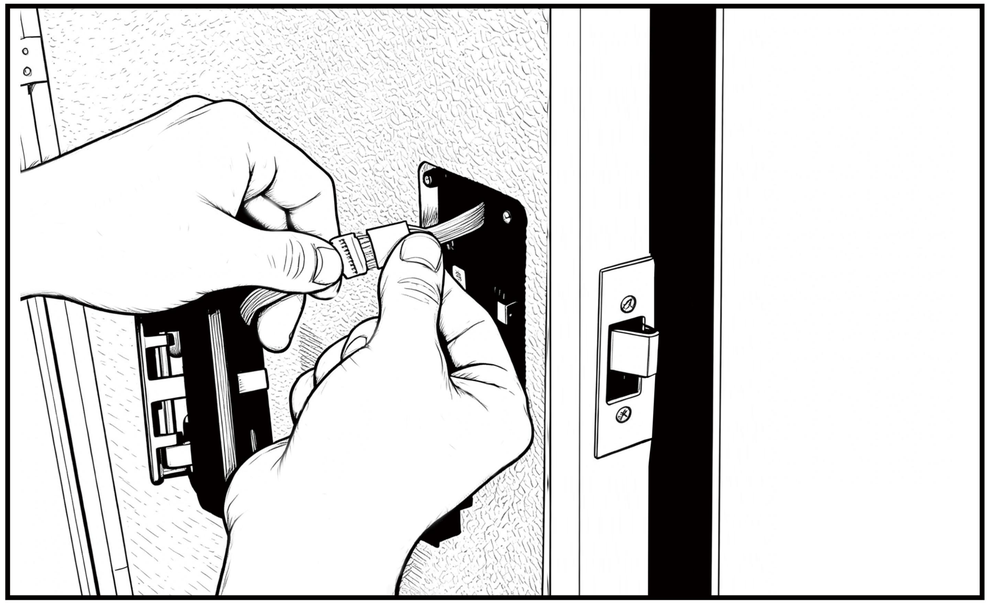

Installation Process

Step 5: Install the Back Lock

Mount the interior lock and tighten all screws.

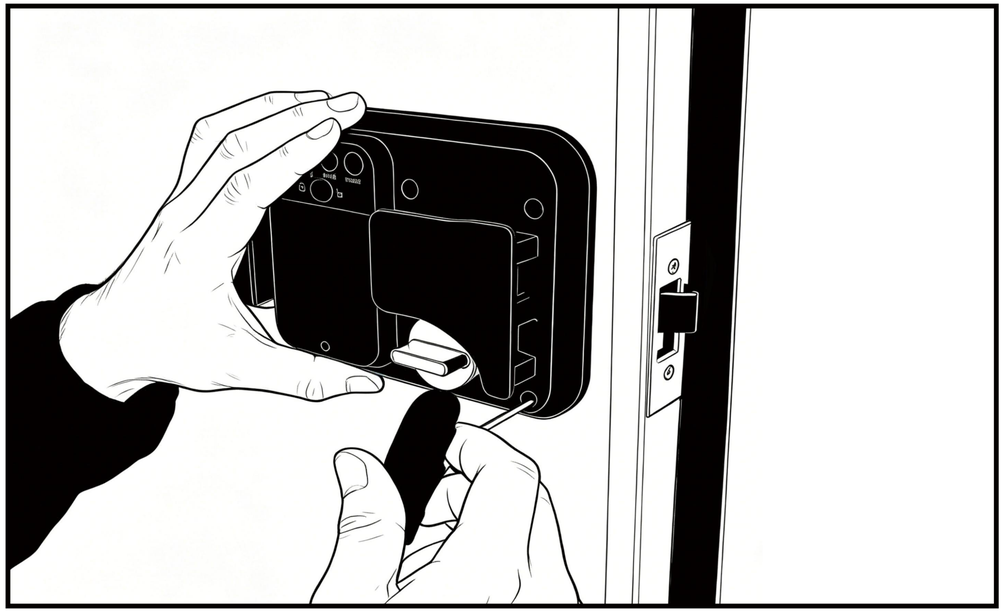

Step 6: Set Up Your RV Lock

Set your code and pair the remote to finish setup.

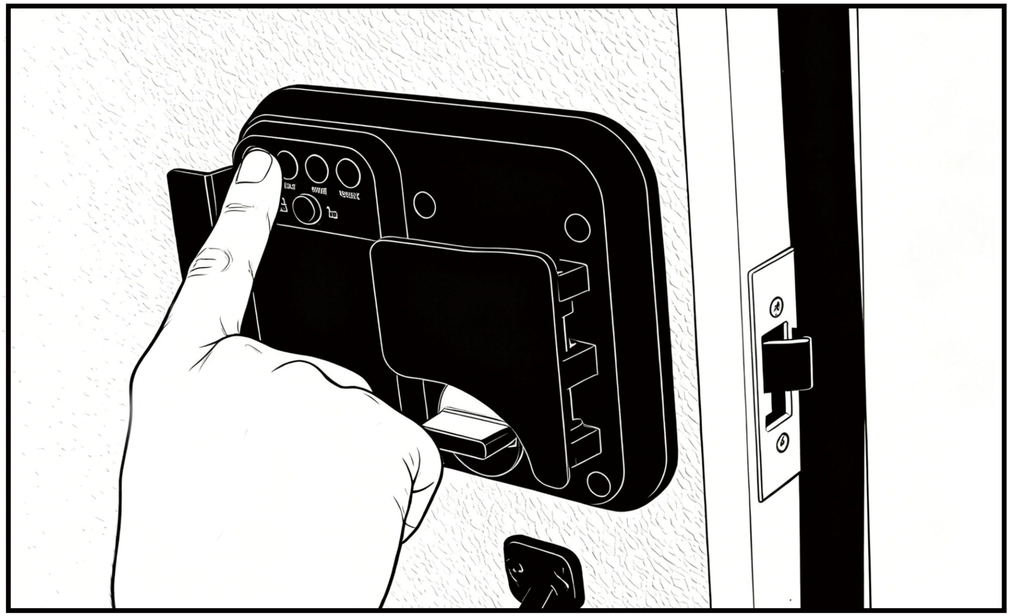

→ Detailed setup steps are on the next page

Quick Set Up

IMPORTANT: Make sure the Child Lock switch is slid to the "Unlock" icon before you begin

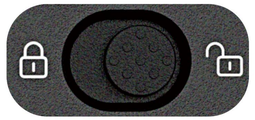

NOTICE: Must set Admin Password before pairing Fobs.

Program Your Keypad

Press "**RESET**" 3 times → Enter default admin code "**12345**" and press+ "√" → Press "**SET**" → New password (5-15 digits) + "√" →

Repeat new password + "√" → "**ONNAIS**" button illuminates green and emit beep sound

TIPS:

1. **If the two entries do not match, the button flashes red two times with two short beeps. The system returns to password setup mode for re-entry.**
2. **Press SET anytime to exit setup mode.**
3. **The default administrator password is 12345.**

Quick Set Up

IMPORTANT: Make sure the Child Lock switch is slid to the "Unlock" icon before you begin

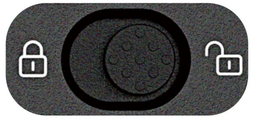

Program Your Fob

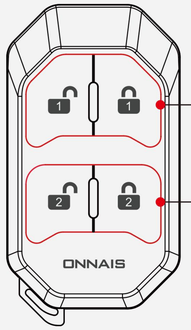

Lock 1

Lock 2

Your new password + "√" → Press "**SET**" 3 times → The panel lights start flashing →

Press any button on the fob → "**ONNAIS**" button lights up green and flashes twice with a single beep →

Keypad flashes for 15s during pairing. Finish within 15s.

***How to pair both Lock 1 & Lock 2 to the same lock:** After entering pairing mode, simply press the 'Lock 1' and 'Lock 2' buttons one after the other. This allows either button to operate your lock.

***How to pair Lock 1 & Lock 2 to different locks:** To control two separate locks with one remote, you need to pair the buttons individually:

Follow the FOB pairing process to pair 'Lock 1' with the first lock.

Repeat the same FOB pairing process to pair 'Lock 2' with the second lock.

TIPS:
1. **The administrator password must be set before adding remotes.**
2. **To pair additional ONNAIS fob, repeat the above process.**
3. **A maximum of six fobs can be paired in total.**
4. **To delete Key Fob data, the RV lock must be reset. This will erase ALL data, including paired Fobs and password settings.**

After you finish the setup, please slide the "**Child Lock**" button on the setting panel to the "**Lock**" icon position. This will lock your settings and prevent any accidental resets in the future.

Keypad Operation

Lock: Press the **"ONNAIS"** button on the keypad.

Unlock: Enter your password and press "√".

Change Password

Make sure the Child Lock is on "🔓" → Enter Your Administrator Password → Press "**SET**" → New password (5-15 digits) + "√" → Repeat new password + "√" → "**ONNAIS**" button illuminates green and emit beep sound

Reset the Lock (Forgot Password or Clearing Paired Fobs)

Make sure the Child Lock is on "🔓" → Simply follow the setup process on Page 6 from the beginning.

TIPS: After the reset, all passwords and fobs will be cleared and must be set up again.

Use the Key

How to Unlock: Insert key → Turn right 180° to unlock → Turn back 180° to remove.

How to Lock: Insert key → Turn left 90° to lock → Turn back 90° to remove.

Must Read

Low Battery Warning

When the battery level drops below 5 V, the lock will issue a low-power alert. After unlocking (indicated by three short beeps), the buzzer will sound a long beep, and the one-touch lock button will flash red five times. At this time, please replace the battery as soon as possible.

Changing Batteries

Remove the screw on the back battery cover and install four AA batteries. For best performance, please use four AA alkaline batteries. Try to avoid using rechargeable batteries, as they may cause unstable voltage. Changing the batteries will not affect the current code or remote programming.

*To extend battery life and prevent lock damage during periods of non-use, it is recommended to remove the batteries from the handle when not in the travel season.

Silicone Cover

Ensure the silicone cover remains closed when the mechanical key is not in use to prevent water ingress.

Must Read

Anti-peeping Password

The lock supports an anti-peeping password feature, allowing you to enter random digits before or after the actual password to prevent others from seeing your true code.

TIPS: Up to 32 digits can be entered at one time.

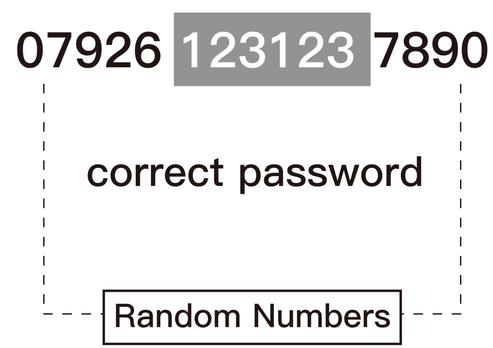

Child Lock

When the switch is in the " 🔓 " position, the SET, LIGHT, MUTE, and RESET buttons are enabled and can be used for their corresponding functions.

When the switch is in the " 🔒 " position, the SET, LIGHT, MUTE, and RESET buttons are disabled and cannot be operated.

Follow Onnais on Instagram & Facebook for faster help.

@ONNAISOFFICIAL

@Onnaisofficial

@Onnais