EWORK®

CORDLESS TIRE INFLATOR

USER MANUAL

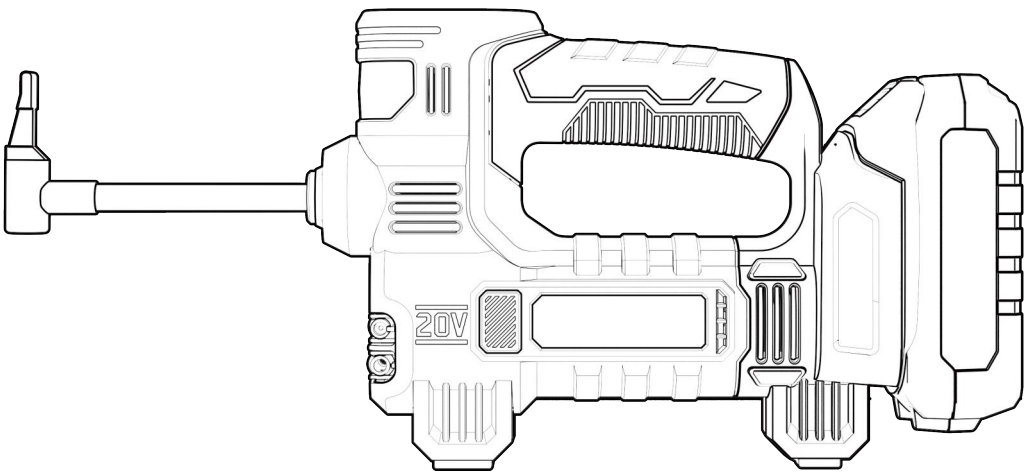

(Include a tool, 2.0Ah battery and 1.5A charger)

EK-XYS-019

Please read before use. Keep for backup.

NOTE

Please check the product for damage or missing accessories.
Please check if there are accessories damaged or lost.
If there are, please contact our customer service team to get a replacement or a full refund.

support_ework@yeah.net

PRODUCT SAFETY

WARNING: This product can expose you to chemicals including lead and Di(2-ethylhexyl) phthalate (DEHP) which are known to the State of California to cause cancer and birth defects or other reproductive harm. For more information go to www.P65Warnings.ca.gov.

WARNING Read all safety warnings and all instructions. Failure to follow the warnings and instructions may result in electric shock, fire and/or serious injury.
Save all warnings and instructions for future reference.
Hot Surface – To reduce the risk of burns, do not touch.
To Reduce the Risk of Electric shock or Injury, Use Indoors Only. Do not expose to rain. Store indoors. Household Use Only.
Risk of Injury – Do not direct air stream at body.
Risk of Bursting – Do not adjust regulator to result in output pressure greater than marked maximum pressure of attachment.

SAFETY WARNINGS FOR WORKLIGHT

CAUTION: Read, understand and follow all Safety Rules and Operating Instructions in this Manual before using this product.

SAVE THESE INSTRUCTIONS!
READ ALL INSTRUCTIONS!

SAFETY INSTRUCTIONS
WARNING: BE SURE to read and understand all instructions in this manual before using this portable hand-held light. Failure to follow all instructions may result in electric shock, fire and/or serious personal injury.

1. **Know your worklight. Read operator's manual carefully.**
   Learn its applications and limitations, as well as the specific potential hazards related to this light.
2. **Use only recommended battery pack and charging stand / transformer.**
   Any attempt to use another battery pack will cause damage to the portable hand-held light and could possible explode, cause a fire, or personal injury.
   Note : For specific information about battery pack and charger ,please refer to Table 1 in this manual.
3. **Remove battery pack from worklight before replacing bulb or performing any routine maintenance or cleaning.**
4. Do not disassemble the worklight.
5. **Do not place worklight or battery pack near fire or heat.** They may explode. Also, do not dispose of a worn out battery pack by incineration, even if it is severely damaged or completely worn out. The battery may explode in fire.
6. **Do not operate worklight or charging stand/ transformer near flammable liquids or in gaseous or explosive atmospheres.** Internal sparks may ignite fumes.
7. **To reduce the risk of electric shock, do not put worklight in water or other liquid.** Do not place or store portable hand-held light where it can fall or be pulled into a tub or sink.
8. **Do not permit children to use worklight unsupervised. It is not a toy.** The temperature of the bulb will become hot after being on only a short period of time. This hot temperature can cause burn injury if touched.
9. **Do not use or permit use of worklight in bed or sleeping bags.** This portable hand-held light lens can melt fabric and a burn injury could result.
10. **Keep light dry, clean, and free from oil and grease.** Always use a clean cloth when cleaning. Never use brake fluid, gasoline, petroleum-base products or any strong solvent to clean the portable hand-held light.

GENERAL SAFETY WARNINGS

WARNING: Read all safety warnings and instructions. Failure to follow the warnings and instructions may result in electric shock, fire and/or serious injury.
Save all warnings and instructions for future reference.

SAFETY WARNINGS FOR BATTERY PACK

a) **Do not dismantle, open or shred battery pack.**
b) **Do not expose battery pack to heat or fire. Avoid storage in direct sunlight.**
c) **Do not short-circuit a battery pack. Do not store battery packs haphazardly in a box or drawer where they may short-circuit each other or be short-circuited by other metal objects.** When battery pack is not in use, keep it away from other metal objects, like paper clips, coins, keys, nails, screws or other small metal objects, that can make a connection from one terminal to another. Shorting the battery terminals together may cause burns or fire.
d) **Do not remove battery pack from its original packaging until required for use.**
e) **Do not subject battery pack to mechanical shock.**
f) **In the event of battery leaking, do not allow the liquid to come in contact with the skin or eyes. If contact has been made, wash the affected area with copious amounts of water and seek medical advice.**
g) **Observe the plus (+) and minus (–) marks on the battery back and equipment and ensure correct use.**
h) **Do not use any battery pack which is not designed for use with the equipment.**
i) **Keep battery pack out of the reach of children.**
j) **Seek medical advice immediately if a cell or battery has been swallowed.**
k) **Please use chargers and battery packs that must be the same specifications and models as the ones we provide.**

l) **Keep battery pack clean and dry.**
m) **Wipe the battery pack terminals with a clean dry cloth if they become dirty.**
n) **Battery pack needs to be charged before use. Always use the correct charger.**
o) **Do not leave battery pack on prolonged charge when not in use.**
p) **After extended periods of storage, it may be necessary to charge and discharge the battery pack several times to obtain maximum performance.**
q) **Battery pack gives its best performance when it is operated at normal room temperature** (20 °C ± 5 °C).
r) **When disposing of battery packs, keep battery packs of different electrochemical systems separate from each other.**
s) **Do not use any charger other than that specifically provided for use with the equipment.** A charger that is suitable for one type of battery pack may create a risk of fire when used with another battery pack.
t) **Retain the original product literature for future reference.**
u) **Use only the battery pack in the application for which it was intended.**
v) **Remove the battery pack from the equipment when not in use.**
w) **Dispose of properly.**

SYMBOL

	To reduce the risk of injury, user must read instruction manual
	Warning
	Wear eye protection
	Li-Ion battery, battery must be recycled
	Batteries may enter water cycle if disposed improperly, which can be hazardous for ecosystem. Do not dispose of waste batteries as unsorted municipal waste.
	Do not burn

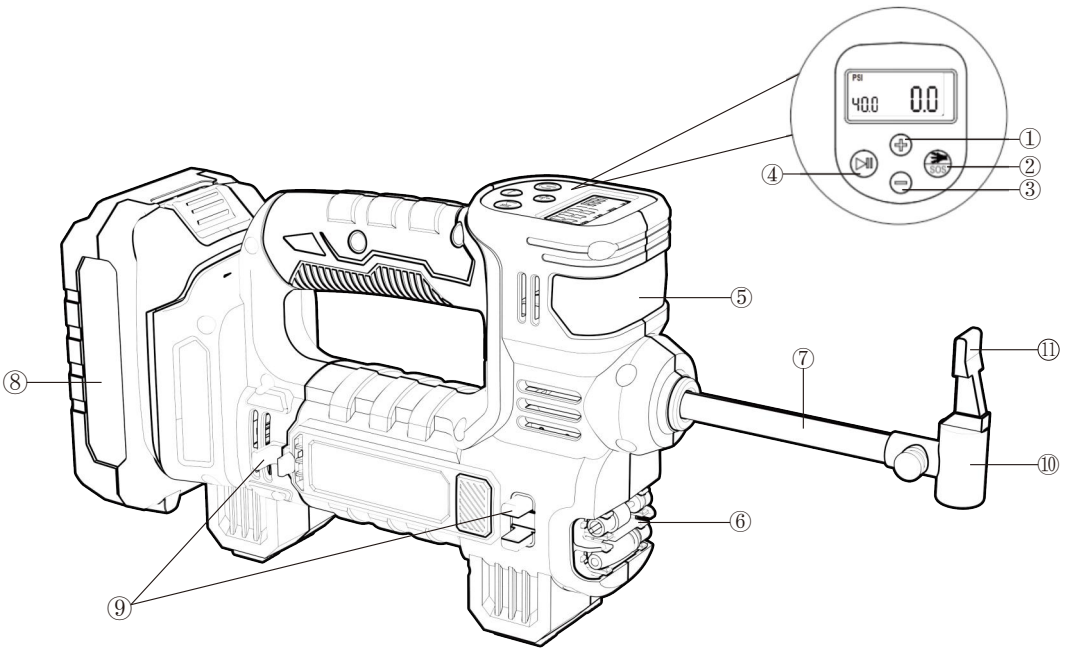
PSI
40.0
0.0
①
②
③
④
⑤
⑥
⑦
⑧
⑨
⑩
⑪

COMPONENT LIST

1.	INCREASE PSI
2.	START/STOP BUTTON
3.	DECREASE PSI
4.	POWER BUTTON
5.	WORKLIGHT
6.	ADAPTER HOLDER
7.	HOSE
8.	BATTERY PACK*
9.	HOSE CLAMP
10.	AIR CHUCK
11.	AIR CHUCK CLAMP
12.	PRESTA VALVE ADAPTER(SEE FIGURE D2)
13.	SPORT BALL NEEDLE(SEE FIGURE D3)
14.	TAPERED ADAPTER (SEE FIGURE D4)
15.	WORKLIGHT BUTTON (SEE FIGURE F)

TECHNICAL DATA

Rated voltage	20 V ⎓ Max**
Inflation efficiency (0 to 36PSI for 215/55R17 tires)	4 mins
Working pressure	150 psi Max 120 psi 2.5 mins/7.5 mins
Weight (Bare tool)	2.1 lbs

** Voltage measured without workload. Initial battery voltage reaches maximum of 20 volts. Nominal voltage is 18 volts.

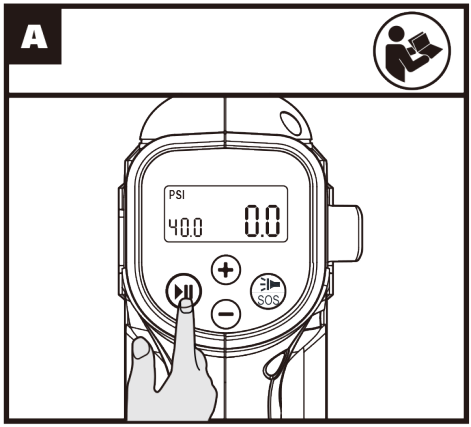
A
PSI
40.0
0.0
SOS

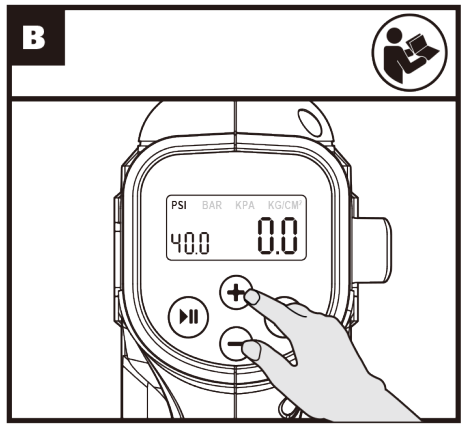
B
PSI
BAR
KPA
KG/CM²
40.0
0.0

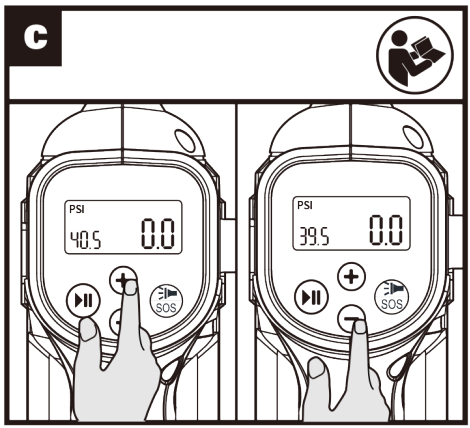
C
PSI
40.5
0.0
PSI
39.5
0.0
SOS
SOS

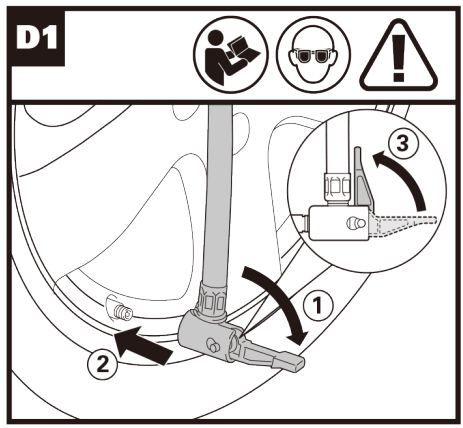
D1
1
2
3

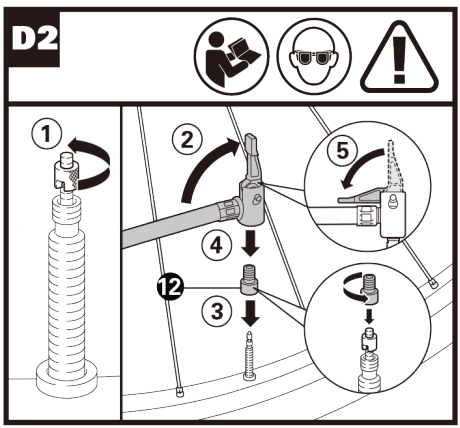
D2
1
2
3
4
5
12

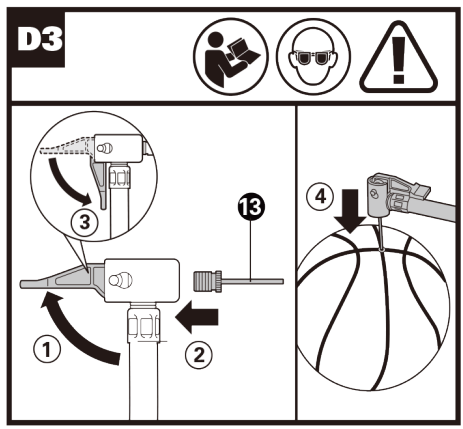
D3
1
2
3
4
13

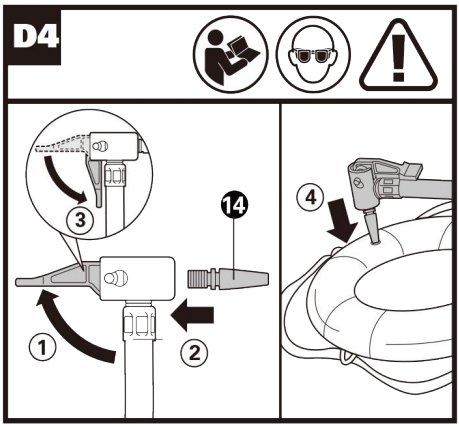
D4
3
14
4
1
2

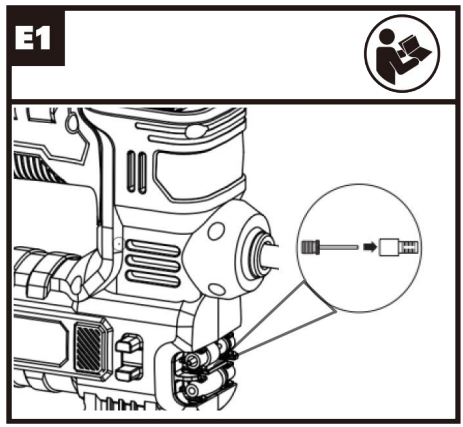
E1

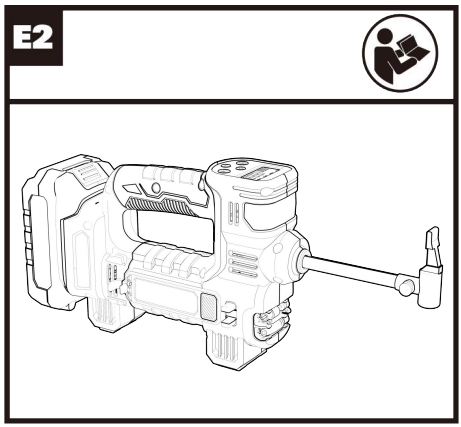
E2

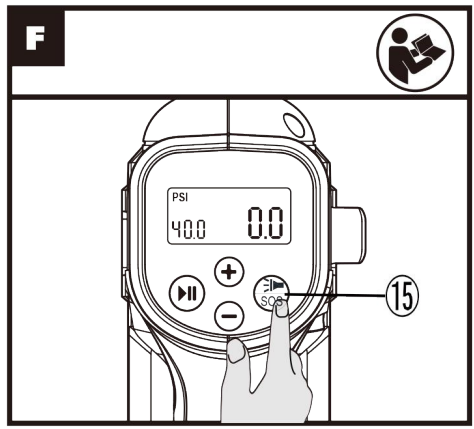
F
PSI
40.0
0.0
SOS
15

OPERATING INSTRUCTIONS

NOTE: Before using the tool, read the instruction book carefully.

INTENDED USE

This product is a multifunctional device, combining inflators, deflators, tire pressure monitor, lighting, SOS warning five functions in one.

ASSEMBLY AND OPERATION

ACTION	FIGURE
OPERATION	
Power button Press the button to turn on the tool and hold the button to turn it off. **NOTE:** To avoid unintentional start up, the power button will automatically shut down when the Start/Stop button is not pressed for a certain period after the power button is turned on.	See Fig.A
Changing the unit of measure Press INCREASE PSI and DECREASE PSI simultaneously to change the unit of measure	See Fig. B
Setting the pressure Press INCREASE PSI or DECREASE PSI to set the pressure value. **NOTE:** Object's original air pressure will be displayed once connected. Without connection, "0" will be displayed.	See Fig.C
Inflating Connect the object to the tool. Then press Start/Stop button. Once it reaches the set pressure, the tool will automatically stop. **NOTE:** Make sure all connections have been tightened before inflating. **NOTE:** In E2, loosen the locking nut on the valve stem first. **! WARNING:** When inflating the floating tube, check the status of the tube rather than using the pressure value on the gauge.	See Fig. D1,D2,D3, D4
Work Light Press the work light button to cycle through work light or SOS emergency light. **! WARNING:** Do not look towards the light directly.	See Fig. F
Storing adapter and hose	See Fig. E1,E2

Battery protection system

The tool is equipped with a battery protection system. The system will automatically cut off power to the tool to extend battery life. The tool will automatically stop during operation if the battery is placed under one of the following conditions:

- **Overloaded:** The tool is operated in a manner that causes it to draw an abnormally high current. In this situation, turn the tool off and stop the application that caused the tool to become overloaded. Then turn the tool on to restart.
- **Low battery voltage:** The remaining Battery capacity is too low and the tool will not operate. In this situation, remove and recharge the Battery.

MAINTENANCE

Remove the battery pack from the tool before carrying out any adjustment, servicing or maintenance.

Your power tool requires no additional lubrication or maintenance.

There are no user serviceable parts in your power tool. Never use water or chemical cleaners to clean your power tool. Wipe clean with a dry cloth. Always store your power tool in a dry place. Keep the motor ventilation slots clean. Keep all working controls free of dust. Occasionally you may see sparks through the ventilation slots. This is normal and will not damage your power tool.

ABOUT WARRANTY

Q: Do you have warranty for this product?

A: We strictly abide by the Amazon regulations which cover a full refund or a free replacement within 30 days since your purchase. Additionally, we offer a one-year warranty, if there are any problems with this product, please always feel free to contact us at **support_ework@yeah.net**. We promise our team always stands behind our product and we will try our best to offer you a better user experience.