# RS 4 MINI

## User Manual

v1.0 2025.02

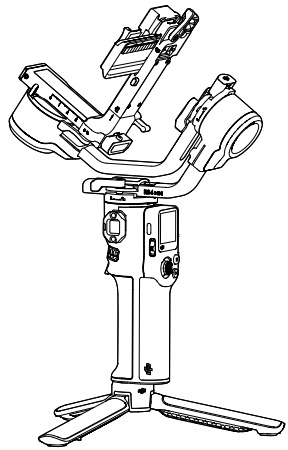

This document is copyrighted by DJI with all rights reserved. Unless otherwise authorized by DJI, you are not eligible to use or allow others to use the document or any part of the document by reproducing, transferring or selling the document. Only refer to this document and the content thereof as instructions to operate DJI products. The document should not be used for other purposes.

In the event of divergence among different versions, the English version shall prevail.

**Searching for Keywords**

Search for keywords such as “battery” and “install” to find a topic. If you are using Adobe Acrobat Reader to read this document, press Ctrl+F on Windows or Command+F on Mac to begin a search.

**Navigating to a Topic**

View a complete list of topics in the table of contents. Click on a topic to navigate to that section.

**Printing this Document**

This document supports high resolution printing.

 © 2025 DJI All Rights Reserved

# Using this Manual

## Legend

⚠ Important  Hints and Tips  Reference

## Read Before Use

DJI™ provides you with tutorial videos and the following documents:

1. *Safety Guidelines*
2. *Quick Start Guide*
3. *User Manual*

It is recommended to watch all the tutorial videos and read the *Safety Guidelines* before using for the first time. Make sure to review the *Quick Start Guide* before using for the first time and refer to this *User Manual* for more information.

© 2025 DJI All Rights Reserved

# Contents


**Using this Manual** 3
- Legend 3
- Read Before Use 3

**1 Overview** 6

**2 Using For The First Time** 8
- 2.1 Attaching the Extended Tripod 8
- 2.2 Charging the Battery 8
- 2.3 Mounting the Camera 9
  - Supported Cameras and Lenses 9
  - Preparation 9
  - Attaching the Upper Quick-Release Plate 9
  - Horizontal Shooting 10
  - Vertical Shooting 11
- 2.4 Balancing 12
  - Before Balancing 12
  - Balancing Steps 12
- 2.5 Activation 13
- 2.6 Firmware Update 14
- 2.7 Connecting a Camera 14
- 2.8 Auto Tune 14

**3 Operations** 16
- 3.1 Button and Port Functions 16
  - Buttons 16
  - Ports 18
- 3.2 Touchscreen 18
  - Home 18
  - Slide Down - Control Center 19
  - Slide Up - Gimbal Settings 20
  - Slide Right - ActiveTrack Settings 20
- 3.3 Gimbal Follow Modes 21
- 3.4 Gimbal Operation Modes 23
- 3.5 Ronin App Settings 24
- 3.6 Intelligent Tracking Module 25
  - Overview 25
  - Installation 26
  - Tracking and Shooting 26
    - Control via Buttons and Joystick 26



© 2025 DJI All Rights Reserved

Control via Gesture 27
Firmware Update 28

**4 Grip/Built-In Battery 30**
4.1 Safety Guidelines 30

**5 Appendix 33**
5.1 Maintenance 33
5.2 Specifications 33

© 2025 DJI All Rights Reserved 

# 1 Overview

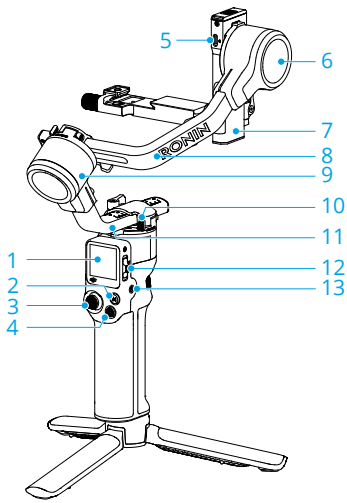


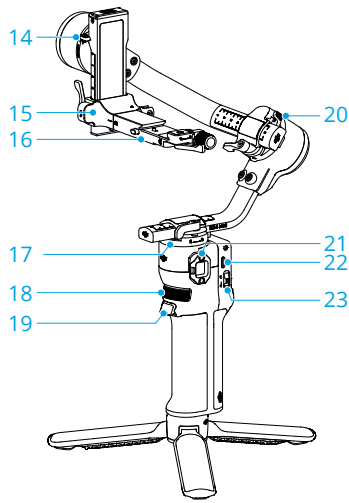


1. Touchscreen
2. M Button
3. Joystick
4. Camera Control Button
5. RSS Camera Control Port (USB-C)
6. Tilt Motor
7. Tilt Axis
8. Roll Axis
9. Roll Motor
10. Pan Lock
11. Pan Axis
12. Gimbal Mode Switch
13. Power Button
14. Tilt Lock
15. Camera Mounting Plate
16. Gimbal Horizontal Plate (Removable Part on the Camera Mounting Plate)
17. Pan Motor


© 2025 DJI All Rights Reserved

18. Front Dial
19. Trigger
20. Roll Lock
21. NATO Port
22. Charging Port (USB-C)
23. Joystick Mode Switch

© 2025 DJI All Rights Reserved 

# 2 Using For The First Time

## 2.1 Attaching the Extended Tripod

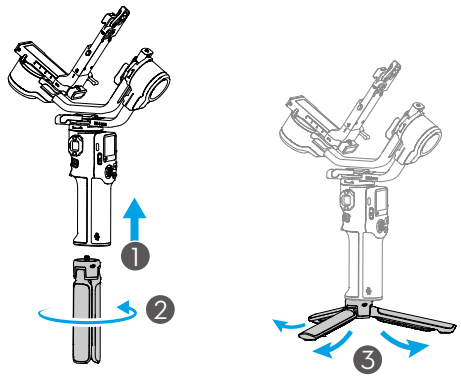


## 2.2 Charging the Battery

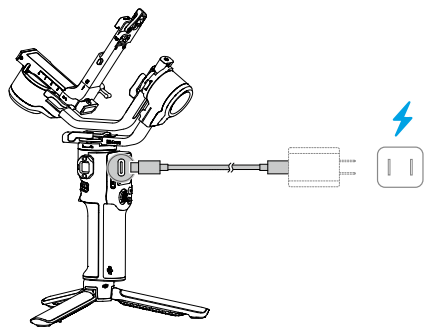

Press the power button to check the battery level on the screen when powered off.


© 2025 DJI All Rights Reserved

# 2.3 Mounting the Camera

## Supported Cameras and Lenses

Visit https://www.dji.com/rs-4-mini/specs for information on specifications and make sure the combined weight of the camera, lens, and other accessories are within the load capacity. Refer to the *Ronin Series Compatibility List* for compatible camera lenses and control features supported.

## Preparation

1. Remove the lens cap and check that the battery and memory card are inserted in the camera.
2. Make sure to power off the gimbal.
3. Move the tilt and roll locks to the unlocked position respectively and adjust the position of both axes as shown in the figure below, then lock the axes.

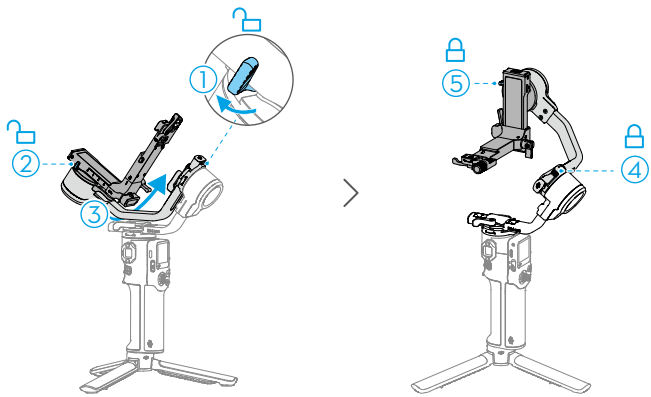


## Attaching the Upper Quick-Release Plate

Attach the upper quick-release plate to the bottom of the camera with the 1/4" screw in the screw kit. Snap the adjustable placement guide onto the camera body before locking the screw.

© 2025 DJI All Rights Reserved

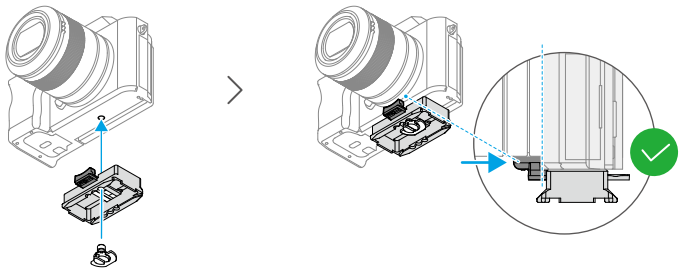

## Horizontal Shooting

1. Move the lever on the horizontal plate to the unlocked position ①, insert the lower quick-release plate ② and move the lever to the locked position ③ after it is engaged.
2. Move the lever on the lower quick-release plate to the unlocked position ④, insert the upper quick-release plate ⑤ and move the lever to the locked position ⑥ after it is engaged.

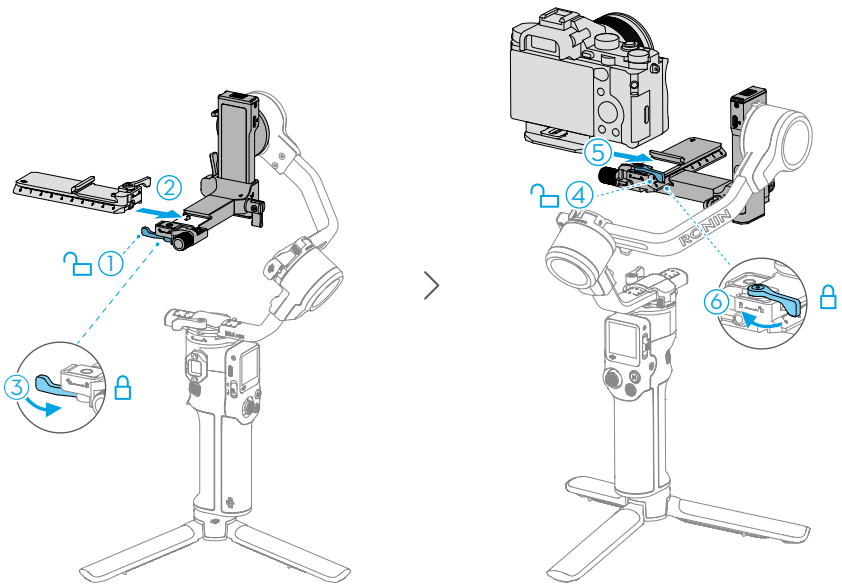


- To remove the camera from the lower quick-release plate, move the lever to the unlocked position and remove the camera while pressing the safety lock beside the lever.


© 2025 DJI All Rights Reserved

- To remove the lower quick-release plate, move the lever on the horizontal plate to the unlocked position and remove the lower quick-release plate while pressing the safety lock on the horizontal plate.

## Vertical Shooting

1. Loosen ① and press the knob ② to remove the horizontal plate ③. Then, install the plate vertically ④ onto the gimbal and tighten the knob ⑤.

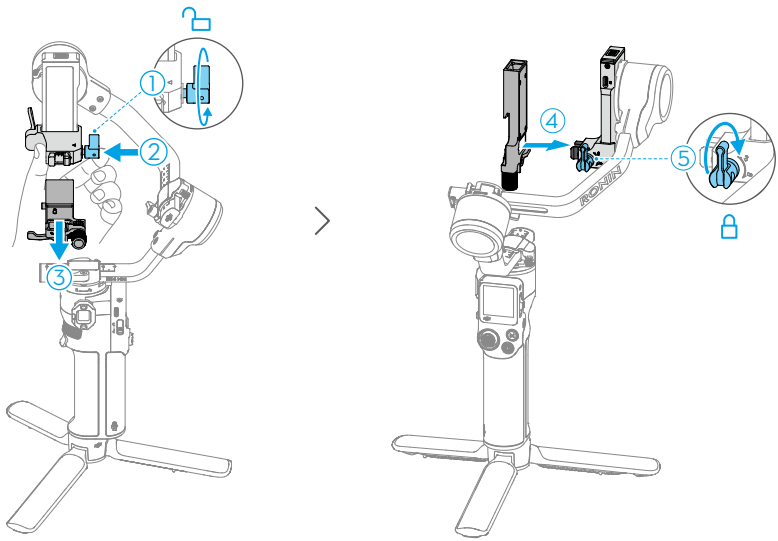


2. Move the lever on the horizontal plate to the unlocked position ①, insert the lower quick-release plate ② and move the lever to the locked position ③ after it is engaged.
3. Move the lever on the lower quick-release plate to the unlocked position ④, insert the upper quick-release plate ⑤, and move the lever to the locked position ⑥ after it is engaged.

© 2025 DJI All Rights Reserved 

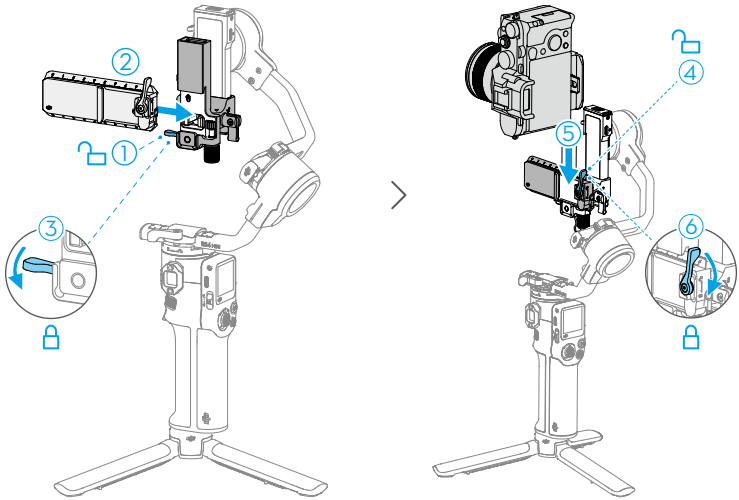


## 2.4 Balancing

Balance the vertical tilt, the depth for the tilt axis, the roll axis and the pan axis in sequence according to the shooting requirements before using the gimbal. This ensures the stability of videos and the full performance of the gimbal.

⚠ An unbalanced gimbal may affect the stability of videos and reduce the battery life. Severe imbalance may cause the device to overheat and go into hibernation.

### Before Balancing

1. Before balancing, make sure to power on the camera if using an optical zoom lens and to select the focal length if using a varifocal lens.
2. Make sure DJI RS 4 Mini is powered off or in sleep mode before balancing.

### Balancing Steps

Click the link or scan the QR code to view the tutorial video.

 © 2025 DJI All Rights Reserved

https://s.dji.com/guide85

## 2.5 Activation

Activation is required for DJI RS 4 Mini through the Ronin app. Follow the steps below to activate your device:

1. Press and hold the power button to power on your device, and select the language on the touchscreen.
2. Scan the QR code on the touchscreen to download the Ronin app.
3. Enable Bluetooth on the mobile phone. Launch the Ronin app and log in with a DJI account. Select the device used, type in the default password 12345678, and activate the gimbal according to the instructions. An internet connection is required for activation.

Up to five uses without activating the gimbal are supported. After that, activation is required for further use.

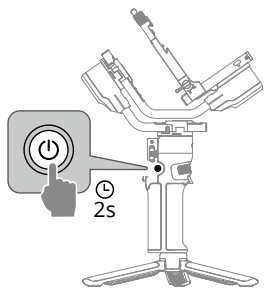


If the Ronin app cannot be downloaded after scanning the QR code on the screen of the device, visit https://www.dji.com/mobile/downloads/djiapp/dji-ronin or scan the QR code below.

© 2025 DJI All Rights Reserved 

## 2.6 Firmware Update

If new firmware is available, users will be notified by the Ronin app. Update the firmware according to the on-screen instructions. DO NOT power off the gimbal or exit the app during the firmware update. If the update fails, restart the gimbal and Ronin app, and try again.

- Make sure the gimbal has sufficient power and the mobile phone is connected to the internet when updating.
- It is normal for the gimbal to unlock, lock, and reboot automatically during the update process.

## 2.7 Connecting a Camera

DJI RS 4 Mini supports connecting to the camera via Bluetooth or camera control cable.

Click the link or scan the QR code to view the tutorial video.

https://www.dji.com/rs-4-mini/video

## 2.8 Auto Tune

Press and hold the M button and trigger to start automatic calibration.

⚠ Place the gimbal on a steady flat surface. DO NOT move the gimbal during automatic calibration. It is normal for the gimbal to shake or make sounds during the calibration.

 © 2025 DJI All Rights Reserved

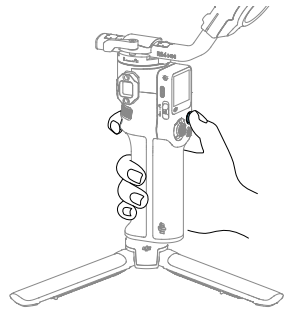

© 2025 DJI All Rights Reserved

# 3 Operations

## 3.1 Button and Port Functions

### Buttons

| | |
|---|---|
| 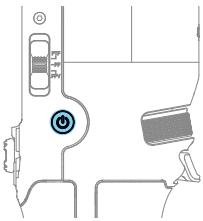 | **Power Button**<br>Press and hold: To power on/off the gimbal.<br>Press once: Enter or exit sleep mode. The three axes will automatically lock. Press again to wake up the gimbal.<br>Settings related to the automated axis locks can be adjusted in the system settings on the touchscreen. |
| 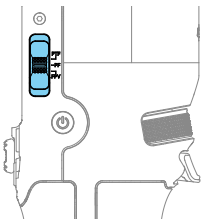 | **Gimbal Mode Switch**<br>Toggle to switch gimbal mode from PF, PTF, and FPV. |
| 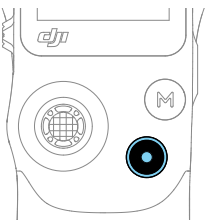 | **Camera Control Button**<br>After connecting the camera, press halfway for autofocus. Press once to start or stop recording. Press and hold to take a photo.<br>Check the Ronin Series Compatibility List for detailed information on supported camera features. |
| 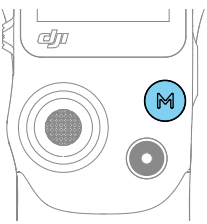 | **M Button**<br>Press once to take photos by default. The function of the button can be set on the touchscreen to C1/Fn1 Button Mapping.<br>Press and hold: Enter Sport Mode. In Sport Mode, the follow speed of the gimbal increases greatly. It is suitable for shooting in scenarios where subjects move suddenly and at fast speeds.<br>Press and hold the M button while pressing the trigger twice: Enter and remain in Sport Mode. Repeat to exit. |


© 2025 DJI All Rights Reserved

| | |
|---|---|
| 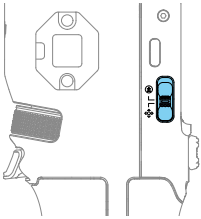 | **Joystick Mode Switch**<br>Push down: Set the joystick mode to gimbal movement control.<br>Push up: Set the joystick mode to zoom control. |
| 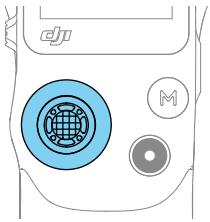 | **Joystick**<br>For gimbal movement control: Move the joystick up and down to control the tilt of the gimbal and move the joystick left and right to control the pan of the gimbal.<br>For zoom control: Move the joystick up and down to control the zoom.<br>Enable the power zoom on Sony cameras and then the joystick can control the power zoom of the camera. |
| 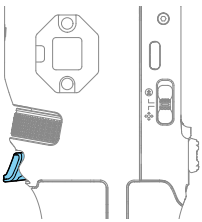 | **Trigger**<br>Press and hold to enter Lock mode. In Lock mode, the gimbal will not respond to the movement of the grip. After setting up on the touchscreen, press and hold the trigger to enter FPV mode.<br>Press twice to re-center the gimbal.<br>Press three times to turn the gimbal 180° so that the camera faces you (selfie mode). |
| 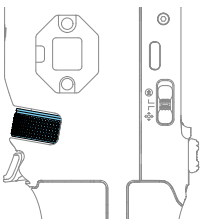 | **Front Dial**<br>Turn to control the focus by default. The settings can be changed via the touchscreen. Refer to the Touchscreen section for more details.<br>Check the Ronin Series Compatibility List for detailed information on supported features. |

© 2025 DJI All Rights Reserved

## Ports

| | |
|---|---|
| 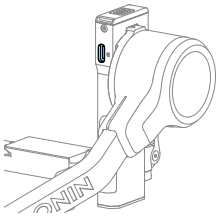 | **RSS Camera Control Port**<br>For connecting to the corresponding camera port for camera control and communication. |
| 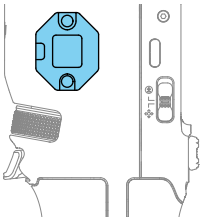 | **NATO Port**<br>For connecting briefcase handles and other accessories. |

# 3.2 Touchscreen

## Home

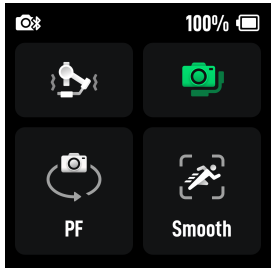


On this interface, you can perform auto calibration , check the balance status , and select gimbal follow mode and follow speed/sensitivity . The status bar at the top of the touchscreen shows the gimbal connection status and battery level.

**Auto Tune** adjusts gimbal stiffness to maintain balance.

**Balance Status** is indicated by different colors.

Tap the Follow Speed/Sensitivity icon to set Slow, Medium, Fast, or Custom follow speeds. Different sensitivity modes are also provided. The Smooth mode inherits the

 © 2025 DJI All Rights Reserved

follow sensitivity of the Ronin series stabilizers, ensuring natural transitions and smooth start and stop movements in your footage. In Responsive mode, the gimbal responds more quickly to hand movements during start and stop, providing a more responsive experience.

- After balancing the gimbal, if changing the focal length, changing the lens or the camera causes the balance status icon to turn red, or if the gimbal shakes for no reason, it is recommended to perform automatic calibration.
- It is recommended to increase the motor strength if the gimbal is not stable enough and to lower the stiffness if the gimbal starts to shake.

## Slide Down - Control Center

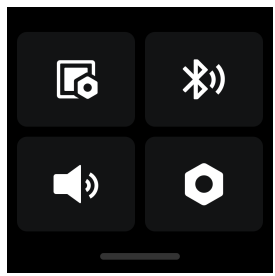

On this interface, you can perform operations such as lock screen settings , Bluetooth connection , and adjusting silent mode .

In the System Settings menu , you can perform gimbal auto check, auto lock settings, and parameter restoration. In addition, the following features are available.

- Disable Selfie: Disable Selfie prevents accidentally entering selfie mode and interrupting recording.
- Orbit Follow: When enabled, the gimbal obtains smoother movements after enabling when shooting arc shots.
- Push Mode: Enable to manually control the tilt and pan axis.
- Horiz Calibration: Try horizontal calibration or manual calibration when the gimbal is unlevel or the axis is drifting.
- Auto Off: The gimbal will automatically power off after 10 minutes of being locked and inactive.

© 2025 DJI All Rights Reserved

## Slide Up - Gimbal Settings




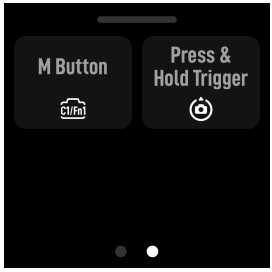


On this interface, you can adjust the joystick speed and smoothness, and select the functions for pressing the dial, the M button, and holding the trigger.

- The lower the smoothness value, the more sensitive the movement of the gimbal.
- Map the C1/Fn1 button feature of the camera:
  1. Map M button to the C1 button on Sony cameras (A7S3, A7M3, ZV-1) or the Fn1 button on Nikon cameras (Z50, Z6II).
  2. Complete the settings on the camera for C1/Fn1 button. The function is only available when connected to a camera via Bluetooth.

## Slide Right - ActiveTrack Settings

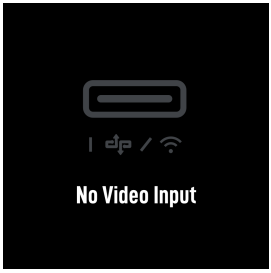


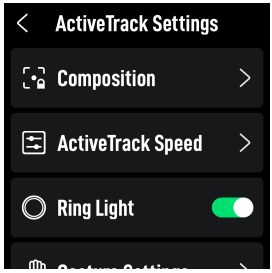


If no intelligent tracking module is connected, No Signal Input will display on the screen. When the intelligent tracking module is connected, composition, ActiveTrack Speed and gestures can be set on this page.


© 2025 DJI All Rights Reserved

**Composition:** When Composition is adjusted to Center Tracking Subject, the subject tracked will be moved to the center of the ActiveTrack view. When ActiveTrack is enabled with Keep Current Framing, the gimbal will maintain the current composition.

**ActiveTrack Speed:** Slow speed provides smooth tracking, ideal for live streaming. Medium speed works well for parallel tracking, while fast speed is best for close-up circling shots or high-motion scenes.

- The touchscreen does not display the ActiveTrack view.
- In Center Tracking Subject, the subject may not always stay perfectly centered due to variations in camera, lens, and shooting distance. If this happens, use the joystick to adjust the composition.

## 3.3 Gimbal Follow Modes

| | |
|---|---|
| 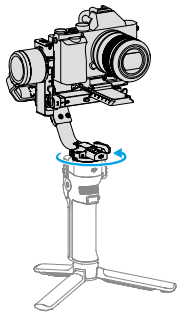 PF | PF: Pan follow, where only the pan axis follows the movement of the grip.<br>Suitable for scenarios such as shooting emerging walk-through and arc shots or moving from left to right. |
| 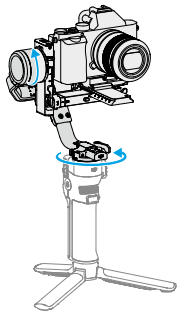 PTF | PTF: Pan and tilt follow, where both the pan and tilt axes follow the movement of the grip.<br>Suitable for scenarios when moving on a slant. |

© 2025 DJI All Rights Reserved

| | |
|---|---|
| 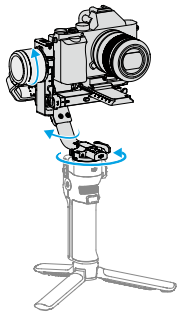<br>FPV | FPV: Pan, tilt, and roll follow, where all three axes follow the movement of the grip.<br>Suitable for scenarios when rotating the camera. |
| Custom | Custom: Enables or disables any axis follow as required. Lock mode is enabled when the three axes are disabled. All the three axes will not follow the movement of the grip in lock mode.<br>Suitable for smooth tracking shots and quick reaction shots. |
| 3D Roll 360 | In 3D Roll 360 mode, the tilt axis is rotated 90° upwards and the camera lens is vertically upwards, at which point you can use the joystick to control the 360° rotation of the pan axis.<br>Suitable for rotating shots. |


© 2025 DJI All Rights Reserved

## 3.4 Gimbal Operation Modes

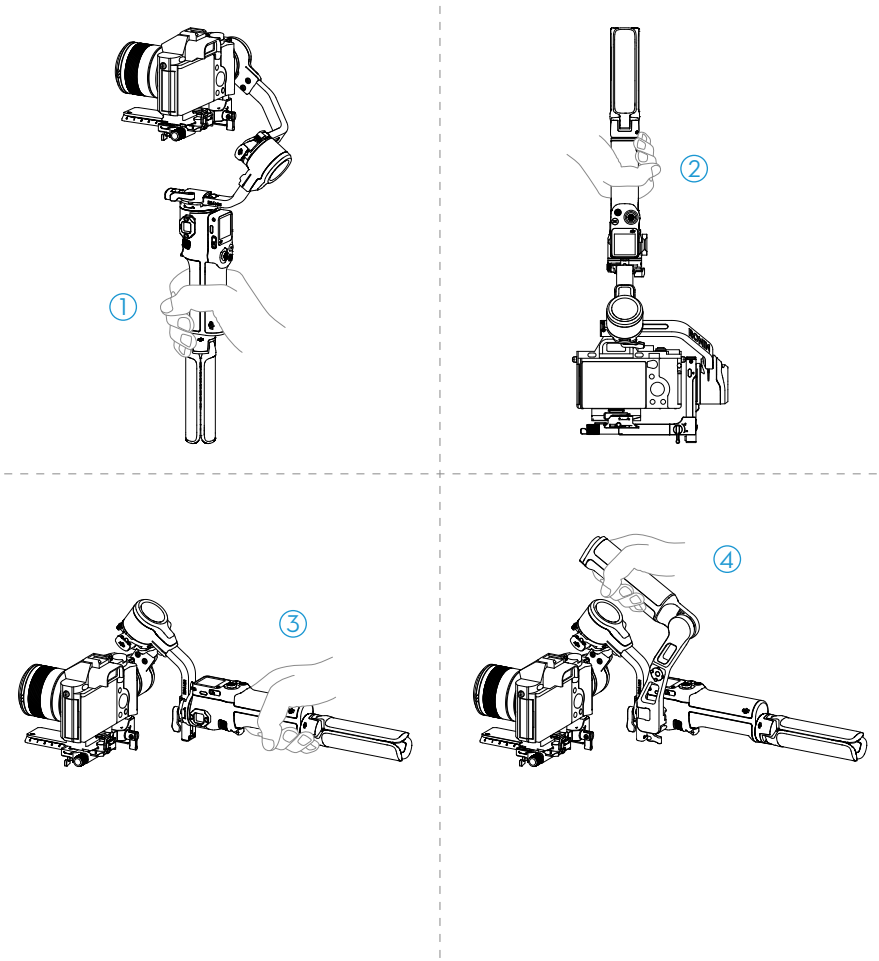


1. **Upright Mode**

   This is is the standard working mode of the gimbal and is suitable for most shooting scenarios such as walking and running shots.

2. **Underslung Mode**

   The gimbal is flipped and the camera is in a lower position. This mode is suitable for taking low angle shots, such as tracking objects on the ground.

3. **Flashlight Mode**

© 2025 DJI All Rights Reserved

The gimbal is held horizontally like a flashlight. This mode is suitable for shooting in confined spaces.

4. **Briefcase Mode**

   The briefcase handle needs to be installed in this mode, making low-angle camera movements more intuitive. The angle of the briefcase handle can be adjusted using the knob. The cold shoes and 1/4"-20 mounting holes of the gimbal allow for mounting external monitors to assist in shooting.

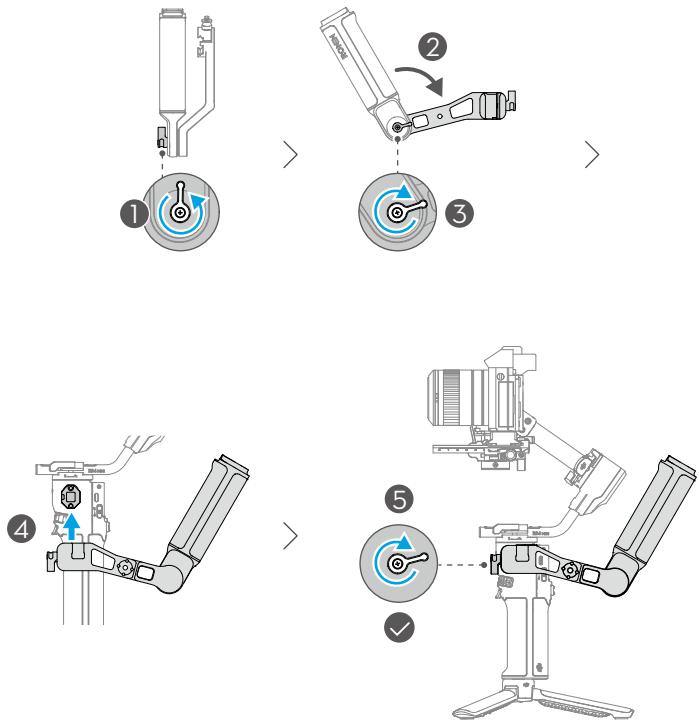


## 3.5 Ronin App Settings

Users can use the Ronin app to activate the gimbal, update the firmware, access intelligent functions, and configure motor parameters, user settings, and joystick options. Additionally, system status, user manual, and tutorial videos can be accessed.


© 2025 DJI All Rights Reserved

## 3.6 Intelligent Tracking Module

### Overview

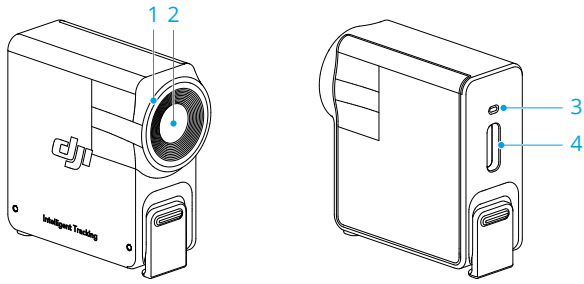


1. Ring Light

| Battery Level | | |
|---|---|---|
| — | Solid red | ActiveTrack disabled(in sleep mode) or subject lost |
| — | Solid green | ActiveTrack in use |
| ····· | Blinks green | Subject lost temporarily |
| — | Solid yellow | Composition being adjusted |
| ····· | Blinks yellow | Countdown for taking a picture or recording (shutter triggered after 3s of blinking) |

2. Tracking Lens
3. Status Indicator

> Light signals and meanings are consistent with the ring light.

4. USB-C Data Port

   Connect to a computer for firmware updates.

© 2025 DJI All Rights Reserved

# Installation

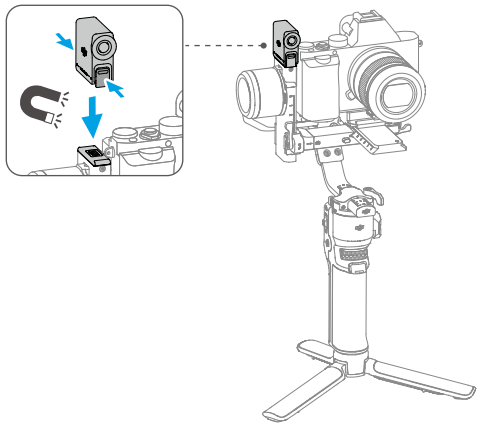

After installing the intelligent tracking module, slide right from the home page to enter the ActiveTrack settings interface and adjust according to shooting needs. For detailed operations, refer to Slide Right - ActiveTrack Settings.

- If the status indicator does not light up after installation, check if the magnetic attachment is in place.
- If the tracking module idle for more than five minutes, it automatically enters sleep mode and the indicator turns off. To wake up the module, press the trigger on the gimbal.

# Tracking and Shooting

- It is not recommended to use in backlight or low-light scenarios.
- During tracking, keep the subject 0.5 m to 10 m away from the tracking lens.

## Control via Buttons and Joystick

Press the trigger to enable or disable the ActiveTrack.

Once the subject is being tracked, you can use the joystick to adjust the composition.

Press the trigger twice to disable the ActiveTrack and recenter the gimbal.

During shooting, you can switch ActiveTrack mode using the gimbal mode switch. In Pan Follow (PF) mode, only the pan axis can follow; in Pan and Tilt Follow (PTF)

 © 2025 DJI All Rights Reserved

mode, both the pan and tilt axes can follow; in Full Follow (FPV) mode, ActiveTrack is not supported.

When shooting from a mid-low camera position, the gimbal handle should point in the direction of the subject being tracked.



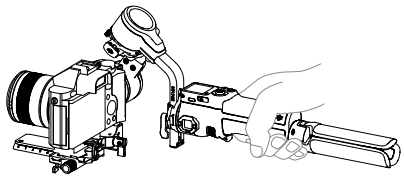

## Control via Gesture

**Enable tracking:** Show the gesture to the camera or press the trigger. The indicator turns solid green.

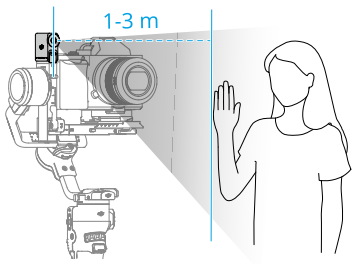


The tracking module only supports following people and prioritizes those close to the lens and near the center of the view. The subject tracked should be 1 m to 3 m away from the tracking lens.

**Adjusting composition:** Adjust the composition as needed during tracking. Show the gesture to the camera. The indicator turns solid yellow and tracking is automatically paused. The subject can move to the desired position in the frame.

Show the gesture again to confirm the composition. The indicator turns solid green and tracking automatically resumes.

© 2025 DJI All Rights Reserved 

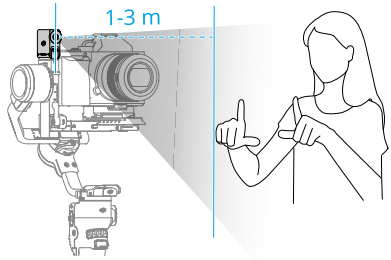


**Stop tracking:** Show the gesture or press the trigger again. The indicator turns solid red.

**Shooting:** Whether tracking is in use or not, you can use to start a countdown for taking a photo or starting/stopping recording. The indicator pulses yellow during the countdown.

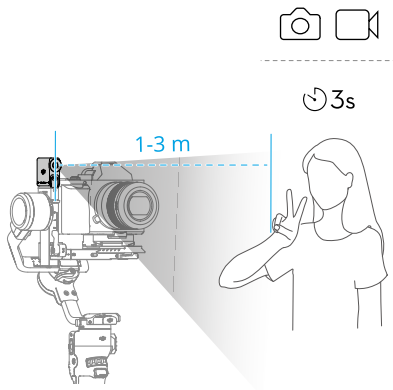


## Firmware Update

The tracking module needs to be connected to a computer for firmware update.

1. Visit https://www.dji.com/rs-4-mini/downloads and download the corresponding firmware package.
2. Use the included USB-C cable to connect the tracking module to the computer.
3. Place the downloaded firmware package (file ending in .bin) in the root directory of the tracking module.
4. Once copied, disconnect the USB connection.


© 2025 DJI All Rights Reserved

5. Reconnect the tracking module to the computer. The tracking module will automatically start the update process. The status indicator will blink red and green alternately. DO NOT disconnect the connection during the process.
6. The status indicator remaining solid red indicates that the update is complete.

© 2025 DJI All Rights Reserved 

# 4 Grip/Built-In Battery

For information about the gimbal battery and gimbal running time, refer to https://www.dji.com/rs-4-mini/specs

## 4.1 Safety Guidelines

⚠

Read the user manual to become familiar with the features of this product before operating. Failure to operate the product correctly can result in damage to the product, personal property, and cause serious injury. This is a sophisticated product. It must be operated with caution and common sense and requires some basic mechanical ability. Failure to operate this product in a safe and responsible manner could result in injury or damage to the product or other property.

This product is not intended for use by children without direct adult supervision. DO NOT alter this product in any way outside of the documents provided by SZ DJI TECHNOLOGY CO., LTD. These Safety Guidelines contain instructions for safety, operation and maintenance. It is essential to read and follow all of the instructions and warnings in the user manual, prior to assembly, setup or use, in order to operate the product correctly and avoid damage or serious injury.

Grip Use

⚠ 1. DO NOT allow the grip to come into contact with any kind of liquid. DO NOT leave the grip out in the rain or near a source of moisture. DO NOT drop the grip into water. If the inside of the battery comes into contact with water, chemical decomposition may occur, potentially resulting in the battery catching on fire, and may even lead to an explosion.

2. If the grip falls into water by accident, put it in a safe and open area immediately. Maintain a safe distance from the grip until it is completely dry. DO NOT use the grip again, and dispose of the grip properly as described in the Grip Disposal section.
3. Put out any fire using water, sand, fire blanket, or a dry powder fire extinguisher.
4. DO NOT use or charge a swollen, leaky, or damaged grip. If the grip is abnormal, contact DJI or a DJI authorized dealer for further assistance.

 © 2025 DJI All Rights Reserved

5. The grip should be used in temperatures from -10° to 45° C (-14° to 113° F). Use of the grip in environments above 50° C (122° F) can lead to a fire or explosion. Use of grip below 0° C (32° F) can significantly reduce operation time.
6. DO NOT use the battery in strong electrostatic or electromagnetic environments or near high-voltage transmission lines.
7. DO NOT disassemble or pierce the grip in any way or the battery may leak, ignite, or explode.
8. DO NOT drop or strike batteries. DO NOT place heavy objects on the grip.
9. Electrolytes in the battery are highly corrosive. If any electrolytes make contact with your skin or eyes, immediately wash the affected area with fresh running water for at least 15 minutes, and then see a doctor immediately.
10. DO NOT use the grip if dropped.
11. DO NOT heat batteries. DO NOT put the grip in a microwave oven or in a pressurized container.
12. DO NOT manually short-circuit the grip.
13. Clean grip terminals with a clean, dry cloth.

1. Make sure the grip is fully charged before use.
2. If a low-battery warning appears, charge the grip as soon as possible.

Charging

1. DO NOT leave the grip unattended during charging. DO NOT charge the grip near flammable materials or on flammable surfaces such as carpet or wood.
2. Charging the grip outside of the temperature range of 5° to 40° C (41° to 104° F) may lead to leakage, overheating, or battery damage. The ideal charging temperature is 22° to 28° C (72° to 82° F).

The grip is designed to stop charging when it is full. It is good practice, however, to monitor the charging progress and disconnect the grip when fully charged.

Storage

1. Keep the batteries out of the reach of children and animals.
2. If the grip will be stored for an extended period, charge the grip until the battery level reaches between 30% and 50%.
3. DO NOT leave the grip near heat sources such as a furnace or heater. DO NOT leave the grip inside of a vehicle on hot days. The ideal storage temperature is 22° to 28° C (72° to 82° F).

© 2025 DJI All Rights Reserved

4. Keep the grip dry.

1. Discharge the grip to 40%-65% if it will not be used for 10 days or more. This can greatly extend the battery life.
2. If the grip is stored for an extended period and the battery is depleted, the grip will enter sleep mode. Recharge the grip to exit sleep mode.
3. If the grip is stored for an extended period and the battery is depleted, the grip will enter sleep mode. Recharge the grip to exit sleep mode.

Maintenance

1. DO NOT use the grip when the temperature is too high or too low.
2. DO NOT store the battery in environments with a temperature higher than 45° C (113° F) or lower than 0° C (32° F).

1. Battery life may be reduced if not used for an extended period.
2. Discharge and charge the grip completely once every three months to keep it in good condition.

Travel Notice

1. Before carrying the grip on an airline flight, it must first be discharged until the battery level is lower than 30%. Only discharge the grip in a fireproof location and store the grip in a ventilated location.
2. Keep the grip away from metal objects such as glasses, watches, jewelry, and hairpins.
3. DO NOT transport a damaged grip or a grip with battery level higher than 30%.

Disposal

Dispose of the grip in specific recycling boxes only after a complete discharge. DO NOT place the grip in regular trash containers. Strictly follow your local regulations regarding the disposal and recycling of batteries.

1. If the grip is disabled and the battery cannot be fully discharged, contact a professional battery disposal or recycling agent for further assistance.
2. Dispose of the grip immediately if it cannot be powered on after over-discharging.

 © 2025 DJI All Rights Reserved

# 5 Appendix

## 5.1 Maintenance

The gimbal is not waterproof. Make sure to protect it from dust and water during use. After use, it is recommended to wipe the gimbal with a soft dry cloth. DO NOT spray any cleaning liquids onto the gimbal.

## 5.2 Specifications

Visit the following website for specifications.

https://www.dji.com/rs-4-mini/specs

© 2025 DJI All Rights Reserved

Contact

**DJI SUPPORT**

This content is subject to change without notice.
Download the latest version from

https://www.dji.com/rs-4-mini/downloads

If you have any questions about this document, please contact DJI by sending a message to **DocSupport@dji.com**.

DJI is a trademark of DJI.
Copyright © 2025 DJI All Rights Reserved.