KUCHT
Professional

WWW.KUCHT.COM

BE A **PRO** IN YOUR KITCHEN



PROFESSIONAL-STYLE

DUAL FUEL RANGE

INSTALLATION AND USER MANUAL

APPLICABLE MODEL: KDF302, KDF362, KDF482
KED304, KED364, KED484

WELCOME TO THE KUCHT FAMILY

This manual contains instructions on how to properly install and set up your new range, as well as insights into many of the unique features that our product offers. Please keep this manual for future reference, as it contains the answers to questions that you might have as you begin to cook.

State of California Proposition 65 Warning: The burning of gas cooking fuel generates some by-products that are on the list of substances which are known by the State of California to cause cancer or reproductive harm. California law requires businesses to warn customers of potential exposure to such substances. To minimize exposure to these substances, always operate this unit according to the use and care manual, ensuring you provide good ventilation when cooking with gas.

TABLE OF CONTENTS

Safety Instructions ..... 4~5

Unpackage instruction 6

Installation Instructions ..... 7~17

Cooktop Operation ..... 18~19

Oven Operation ..... 20~21

Broiler Operation 22

Griddle Operation 23

Care & Cleaning ..... 24~26

Troubleshooting 27

! WARNING

If the information in this manual is not followed exactly, a fire or an explosion may result causing property damage, personal injury or even death.

Do not store or use gasoline, liquid propane cylinder or other flammable vapors and liquids in the vicinity of this appliance.

What to do if you smell gas?

Do not try to light any appliance.

Do not touch any electrical switch.

Do not use any phone in your residence.

Immediately call your gas supplier from a neighbor's phone. Follow the gas supplier's instructions.

If you cannot reach your gas supplier, call the fire department.

For installation and service of your range product, it must be performed by a licensed installer, an approved service agency or your gas supplier.

SAFETY INSTRUCTIONS

This is a safety alert symbol. It will alert you to potential personal or property safety hazards. Obey all safety messages to avoid any property damage, personal injury or death.

WARNING

WARNING indicates a potentially hazardous situation which, if not avoided, could result in serious injury or death.

CAUTION

CAUTION indicates a moderate hazardous situation which, if not avoided, could result in minor or moderate injury.

CAUTION

CAUTION – when used without the safety alert symbol, indicates a potentially hazardous situation which, if not avoided, could result in property damage.

IMPORTANT

IMPORTANT used for installation, operation and maintenance information that are not related to safety.

If the information in this manual is not followed exactly, a fire or an explosion may result causing property damage, personal injury or even death.

Do not store or use gasoline, liquid propane cylinder or other flammable vapors and liquids in the vicinity of this appliance.

Save this manual for future references.

SAFETY INSTRUCTIONS

What to do if you smell gas?

- Do not try to light any appliance.
- Do not touch any electrical switch.
- Do not use any phone in your residence.
- Immediately call your gas supplier from a neighbor's phone. Follow the gas supplier's instructions.
- If you cannot reach your gas supplier, call the fire department.

IMPORTANT

The installation and service of your range product must be performed by a licensed installer, an approved service agency or your gas supplier.

⚠ WARNING



⚠ WARNING

Tip-Over Hazard

A child or adult can tip the range and be killed.

Verify the anti-tip bracket has been installed.

Ensure the anti-tip bracket is engaged when the range is moved.

Do not operate the range without the anti-tip bracket in place.

Failure to follow these instructions can result in death or serious burns to children and adults.

Show specific manufacturer illustrations for checking installation/engagement of anti-tip brackets.

CONSUMER INFORMATION — THE INSTALLER SHALL NOT REMOVE

Before removing label, ensure anti-tip bracket is properly installed.

To reduce the risk of tipping the appliance, the appliance must be secured by properly installed anti-tip device packed with the appliance.

All ranges can tip and cause injuries.

Install anti-tip device packaged with range

Follow all Installation Instructions.

Make sure the anti-tip bracket is installed:

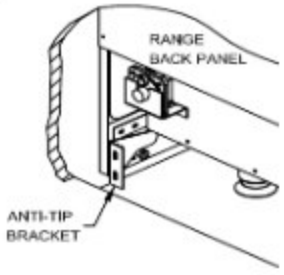

Slide range forward.

Make sure the anti-tip bracket is securely attached to the wall behind the range.

Safely tilt the front of the range upward slightly and move back against wall, Making sure the pin slides under bracket.

UNPACKING AND HANDLING

WARNING

Extremely Heavy.

Proper equipment and adequate manpower when move the range to avoid personal injury or damage to the unit or the floor. The unit is heavy and rests on adjust able steel legs.

Failure to follow this advice may result in damage or personal injury.

WARNING

DO NOT lift range by the oven door handles !

SAFETY INSTRUCTIONS

WARNING

Do not store or use gasoline, liquid propane cylinder or other flammable vapors and liquids in the vicinity of this appliance.

The installation and service of your range must be performed by a qualified installer, an approved service agency or the gas supplier.

Gas appliances can cause minor exposure to four of these substances, namely benzene, carbon monoxide, formaldehyde and soot, caused primarily by the incomplete combustion of natural gas fuel. When operating your range on natural gas, the flames from the burners should be blue in color. In addition, the flames should be stable, free of yellow tipping, excessive noise and lifting. However, this yellow tipping should be restricted to the primary flame kernels only. Properly adjusted burners, indicated by a bluish rather than a yellow flame, will minimize incomplete combustion. Exposure to those substances can be minimized by venting with an open window or use of a ventilation fan or hood.

ELECTRICAL GROUNDING

IMPORTANT

This indoor cooking appliance is equipped with a three-prong (grounding) plug for your protection against shock hazard and should be plugged directly into a properly grounded three-pronged receptacle. DO NOT cut or remove the grounding prong from this plug.

INSTALLATION AND OPERATION INSTRUCTIONS

To ensure proper and safe operation, read all instructions before using the product. Install or locate the product only in accordance with the provided Installation Instructions.

⚠ WARNING

- All servicing should be performed to a qualified technician.
- Do not attempt to adjust, repair, service or replace any part of your appliance unless it is specifically recommended in this guide.
- Do not use the range for warming or heating the room.
- Do not leave children alone or unattended in the area where the range is in use. Never allow them to sit or stand on any part of the range. Do not let children play with the range.
- Have the technician show you the location of the gas shut off valve and how to shut it off in an emergency situation.
- Always disconnect power to appliance before any type of servicing.
- Do not use abrasive or caustic cleaners or detergents on this appliance. They may cause permanent damage to the surface.
- When cooking, set the burner controls so that the flame heats only the bottom of the utensil and does not overlap at the sides of the utensil.
- Utensils (pots and pans) that conduct heat slowly, i.e. glass pots, should be used in conjunction with burner flames at a low or medium setting.
- Turn off all controls and wait for appliance parts to cool down before touching them. Do not touch the burner grates or surrounding areas until cool.
- Do not use water on grease fires.
- Clean appliance with caution.
- Always turn pot handles to the side or back of the range. Do not turn handles towards the area where they can be easily burned. Handles should not extend over the adjacent burners.
- Use the range only for cooking tasks as outlined in this manual. When using the range, do not touch the grates, burner caps, burner bases, or any other parts in proximity to the flame. These components may be hot enough to cause burns.
- Use dry pot holders. Moist or damp pot holders on hot surfaces may result in burns from steam.
- Remove pot holder away from hot surface areas.
- Do not use a towel or other bulky cloth.
- Do not heat unopened food containers. Build up of pressure may cause the container to explode and result in injury.
- During and after use, do not touch interior surfaces of the oven until cool.

INSTALLATION INSTRUCTIONS

IMPORTANT

Keep appliance area clear and free from combustible materials, gasoline, and other flammable vapors.

GAS SUPPLY REQUIREMENTS

Installation of this range must conform with local codes, or in the absence of local codes, the National Fuel Gas Code, ANSI Z223.1 / NFPA 54. In Canada, installation must conform to the current natural Gas Installation /code, CAN 1-1.1-M81 and with local codes where applicable. This range has been design-certified according to ANSI Z21.1b-2012 latest edition.
A statement of the maximum gas supply pressure in accordance with the inlet pressure rating of the gas appliance pressure regulator supplied.

MINIMUM GAS SUPPLY PRESSURE TO APPLIANCE FOR LP GAS---14.0 IN.W.C.
MINIMUM GAS SUPPLY PRESSURE TO APPLIANCE FOR NG --- 6 IN.W.C.
APPLIANCE REGULATOR IS SET AT 5.0 IN. W.C. OUTLET PRESSURE.

Do not obstruct the flow of combustion air into the range and ventilation air away from the range.

Ventilation: it is recommended that the unit be operated with an oven head, vented exhaust hood of sufficient size and capacity.

Before installing the range, you must locate and secure the included anti-tip bracket to the wall for your range.

⚠CAUTION

The use of cabinets for storage above the appliance may result in a potential fire hazard. Combustible items may ignite; metallic items may become hot and cause burns. If a cabinet storage is to be provided, the risk can be reduced by installing a range hood that projects horizontally a minimum of 5" (12.7cm) beyond the bottom of the cabinets.

⚠ WARNING

The appliance shall not be used for space heating. This information is based on safety considerations. All openings in the wall behind the appliance and in the floor under the appliance shall be sealed.

INSTALLATION INSTRUCTIONS

DIMENSIONS AND CLEARANCES

The range may be installed flush to the rear wall. You may install a non-combustible material on the rear wall above the range and up to the vent hood. It is not necessary to install non-combustible materials behind the range below the counter top height.

The minimum distance from the side of the range above the counter top to combustible sidewalls must be at least 10 inches.

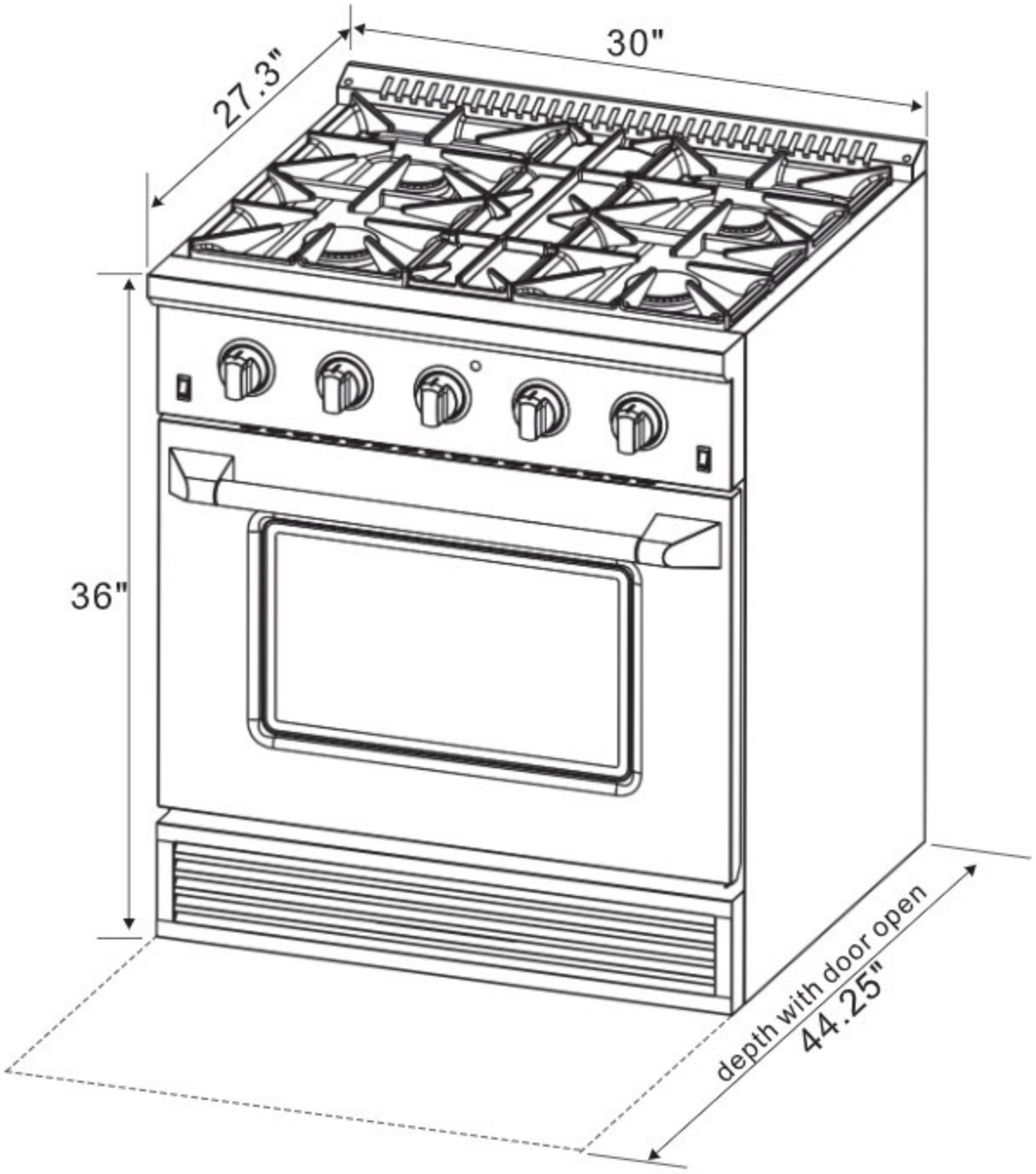

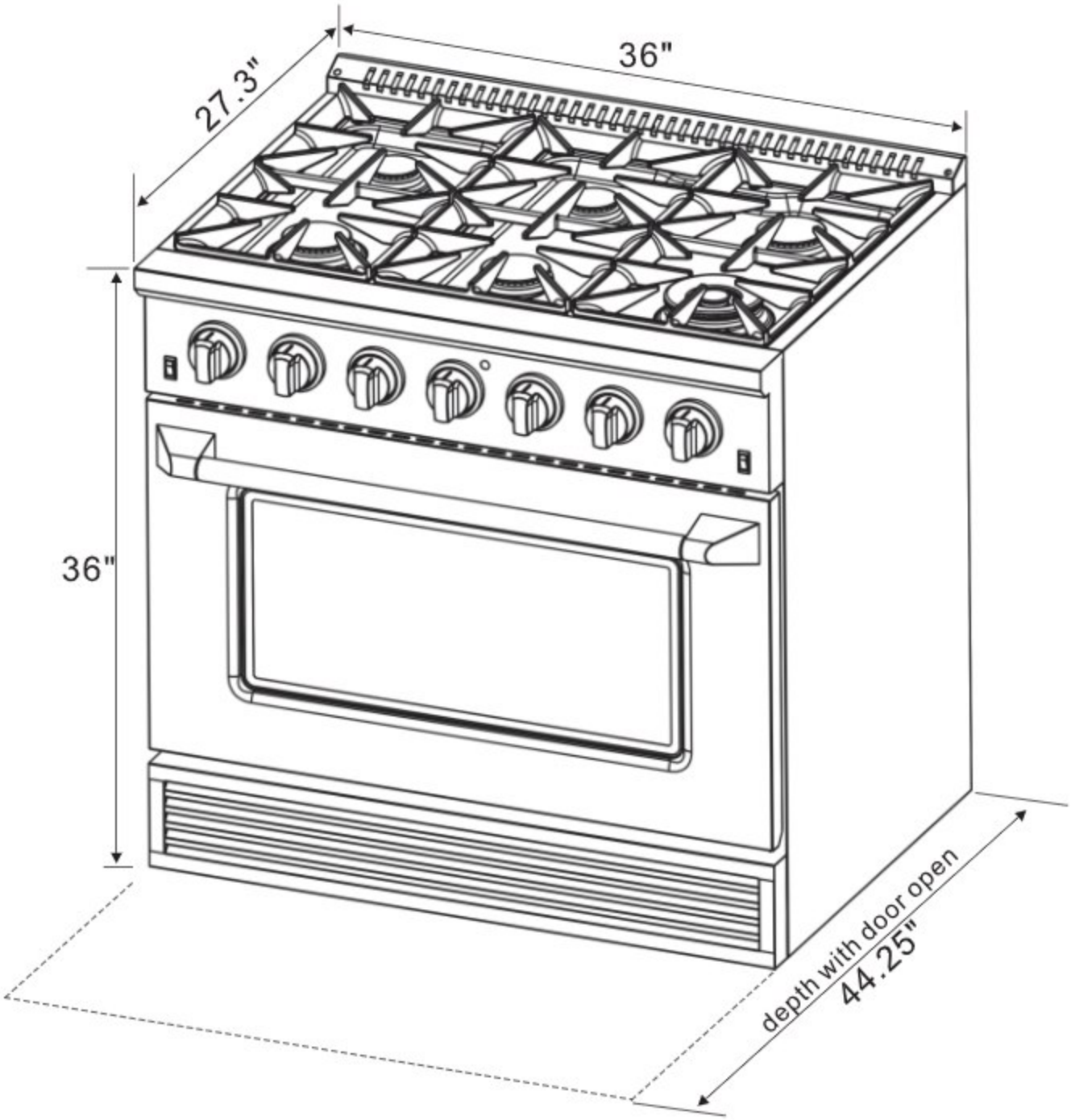
36"
27.3"
36"
depth with door open
44.25"

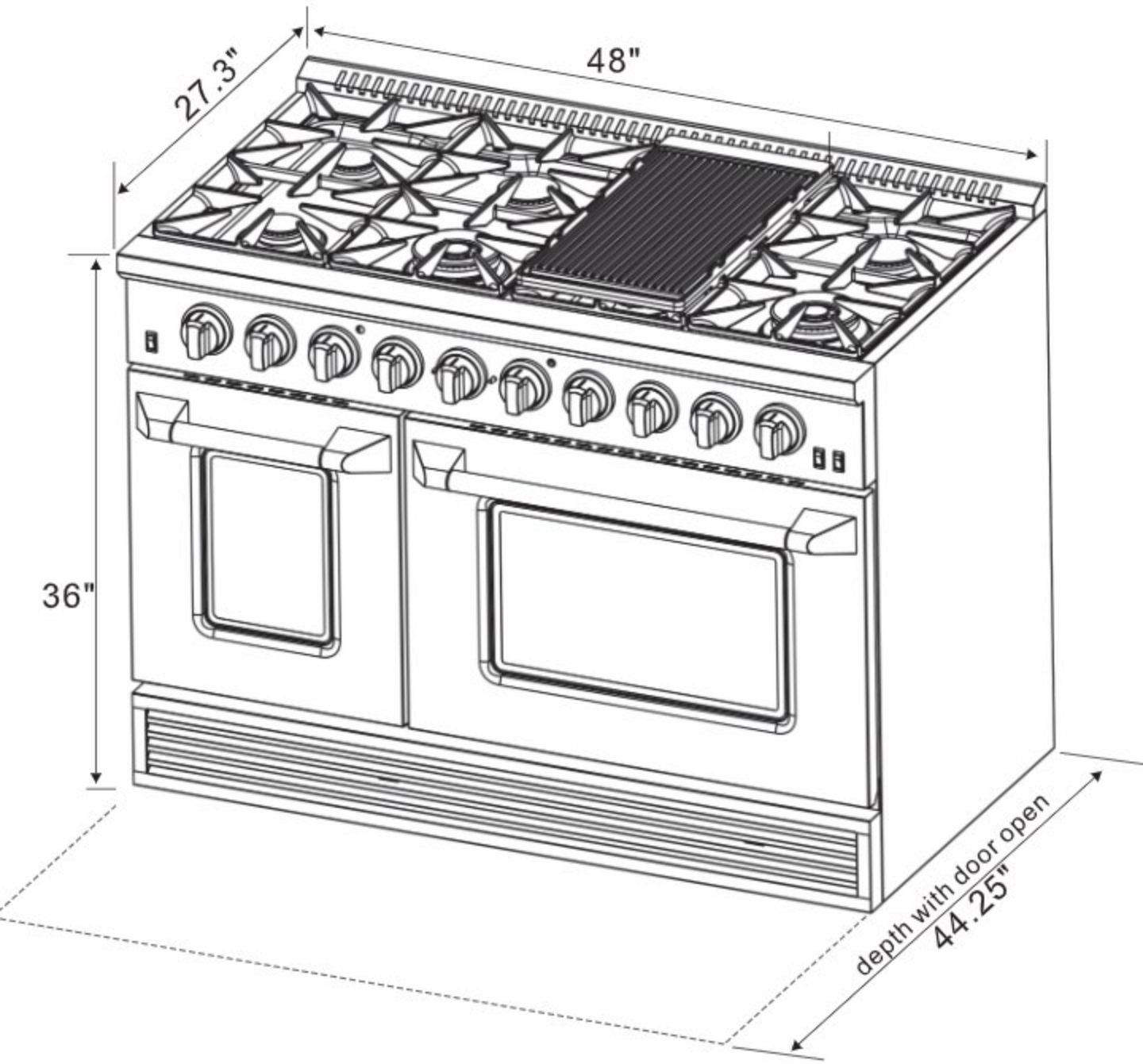
27.3"
48"
36"
depth with door open
44.25"

DIMENSIONS AND CLEARANCES

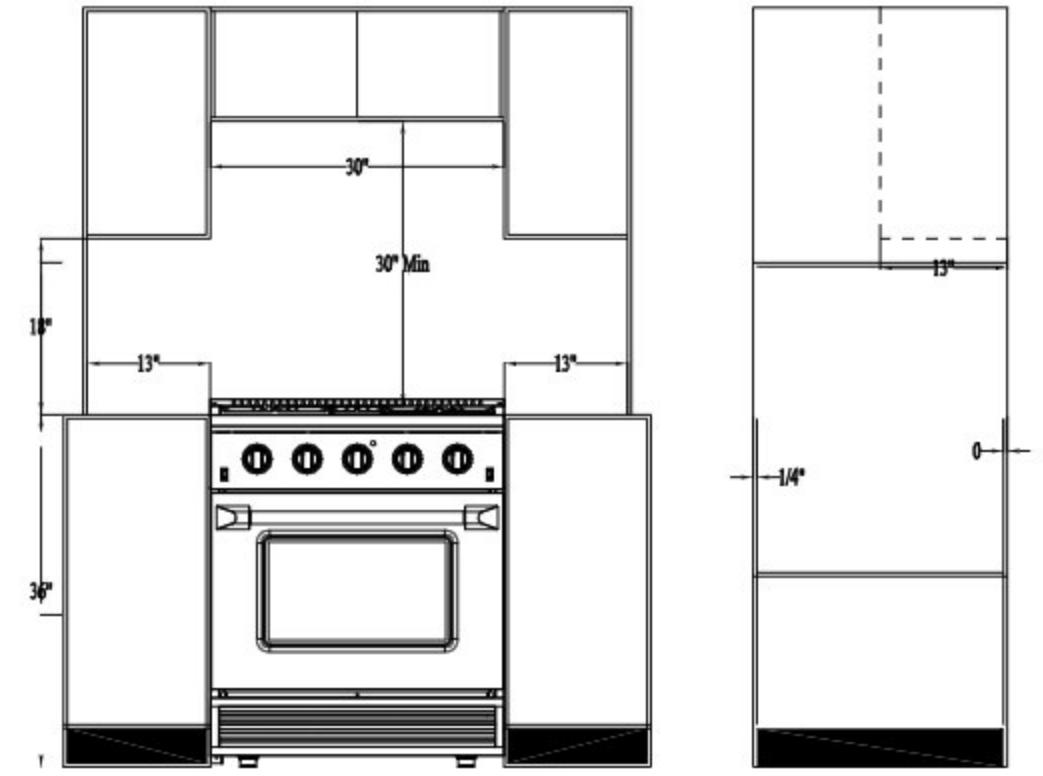

Installation Diagram

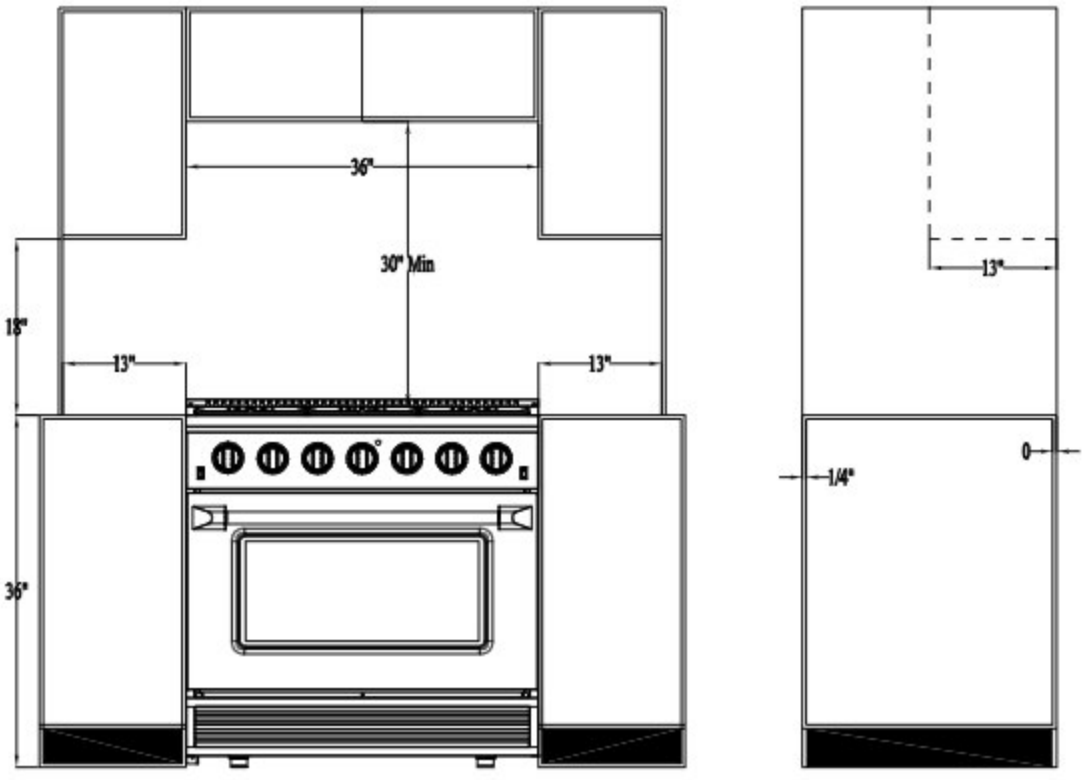

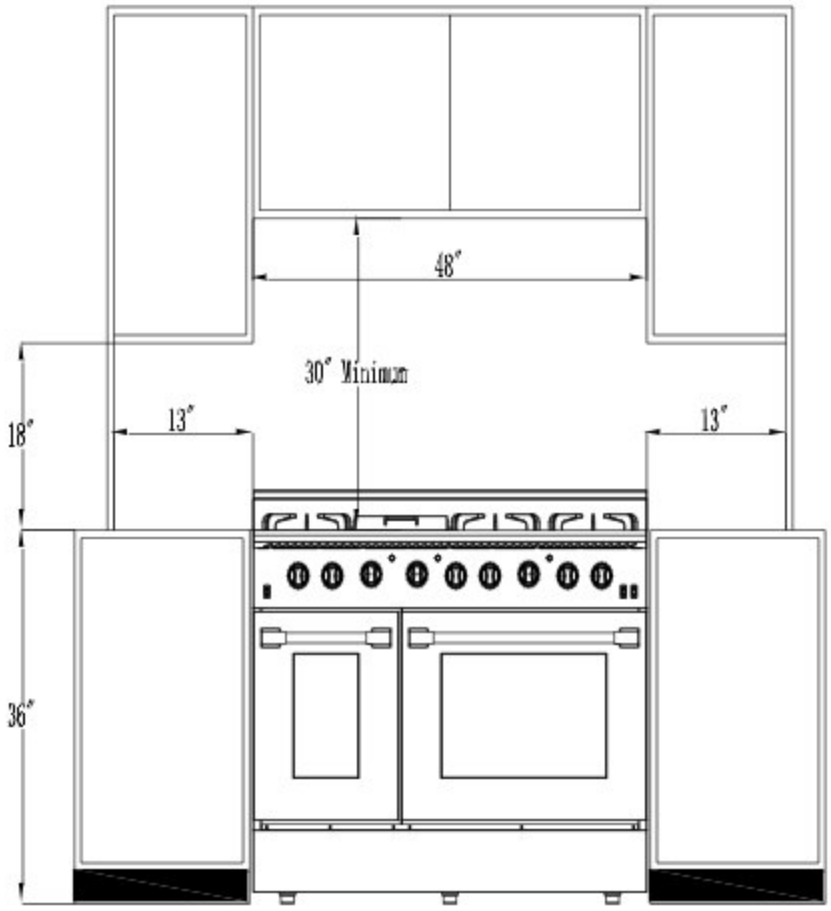

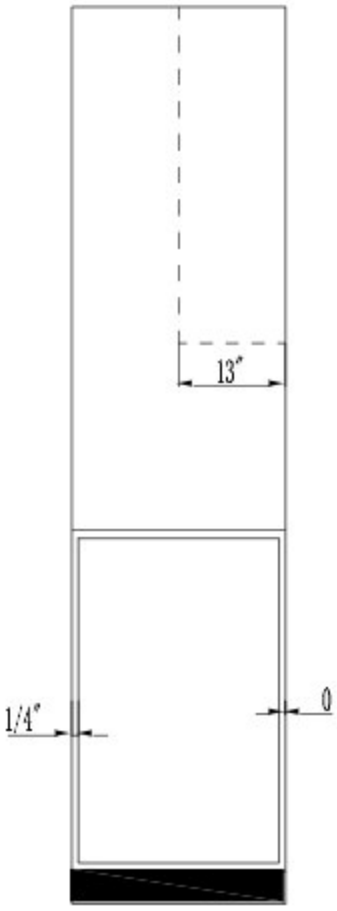

Installation Diagram

Electric Power Supply Requirements

Your range must be electrically grounded in accordance with local codes or, in the absence of local codes, with the National Electrical Code (ANSI/NFPA 70, latest edition). In Canada, electrical grounding must comply with the current CSA C22.1 Canadian Electrical Code, Part 1, and/or local codes. Copies of these standards may be obtained from:
National Fire Protection Association
1 Batterymarch Park
Quincy, Massachusetts 02269-9101

The power supply must have the correct polarity. Reverse polarity will cause continuous sparking of the electrodes, even after flame ignition. If there is any doubt about the power supply's polarity or grounding, have it checked by a qualified electrician.

Use a 240 V, 60 Hz power supply on a properly grounded branch circuit protected by a 30-amp or 40-amp circuit breaker or time-delay fuse.

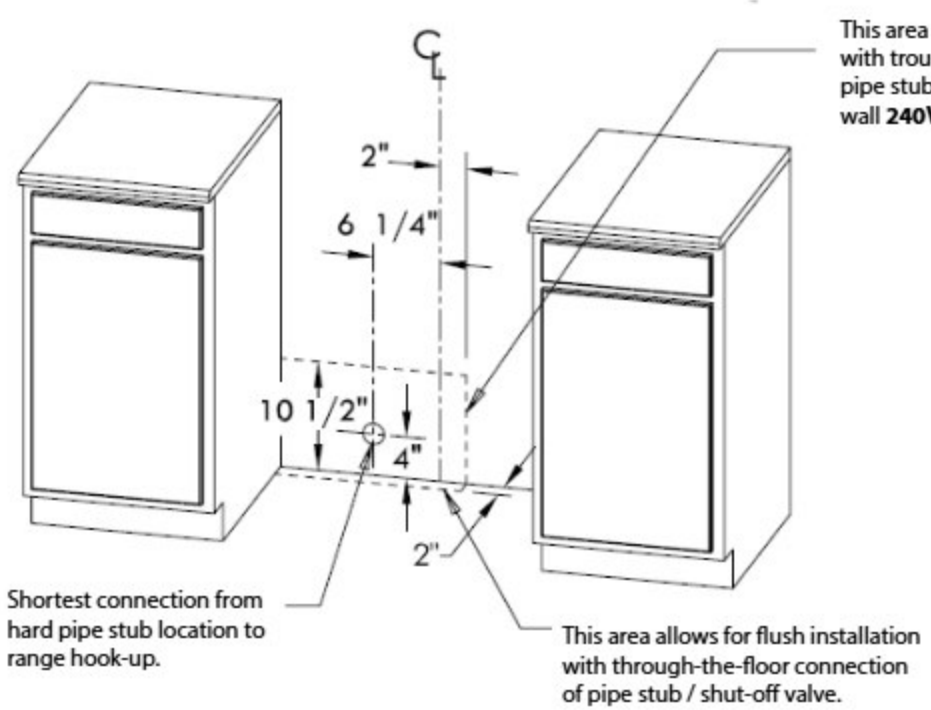

! WARNING

WARNING - Electrical Grounding Instructions
This indoor cooking appliance is equipped with a four-prong (grounding) plug to protect against electric shock. It must be plugged directly into a properly grounded four-prong receptacle.

Do not cut or remove the grounding prong from the plug.
Do not use a four-prong to three-prong adapter.
Do not use a 240 V to 120 V adapter.

If you are unsure whether your outlet is properly grounded, consult a qualified electrician.

Grounding

The power cord is equipped with a four-prong (grounding) plug that fits a standard 240 V four-prong grounding wall receptacle, helping to minimize electrical shock risk.

All cord-connected appliances should include instructions on where to locate the wall receptacle and a warning to disconnect the electrical supply before servicing the appliance.

If a standard two-prong or three-prong wall receptacle is encountered, it is the customer's responsibility to have it replaced with a properly grounded four-prong receptacle. Do not remove or cut the grounding prong from the power cord.

Connecting the Range to the Gas Supply

Install a 1/2-inch manual gas shut-off valve in the gas line, in an easily accessible location between the range and the external gas piping. This valve allows you to turn the gas supply on or off for the appliance.

Attach a male 1/2-inch or 3/4-inch adapter to the 1/2-inch NPT internal thread elbow at the regulator inlet (the regulator is already installed on the range).

Use a wrench on the regulator fitting to avoid damage.

Install a male 1/2-inch x 3/4-inch flare union adapter to the regulator outlet to accommodate the manual shut-off valve. Again, use a wrench on the regulator fitting to avoid damage if you need to turn the shut-off valve.

Verify that the gas line connections match your gas type (Natural Gas or 11-inch L.P. Gas). Thoroughly check all connections for leaks using a soap and water solution. Never use an open flame to check for leaks.

Before testing for leaks, ensure the range and all controls are in the OFF position.

Do not attempt to light any pilot or burner when checking for leaks. Use only a soap solution or leak-detecting fluid.

During any pressure testing of the building's gas supply piping system at test pressures equal to or less than 1/2 psi (3.5 kPa), isolate the appliance from the gas supply by closing the individual manual shut-off valve.

RANGE HOOD INSTALLATION

Due to the high power of the top burners, we do not recommend the use of downdraft ventilation systems. A range hood with at least 450 CFM is advisable.

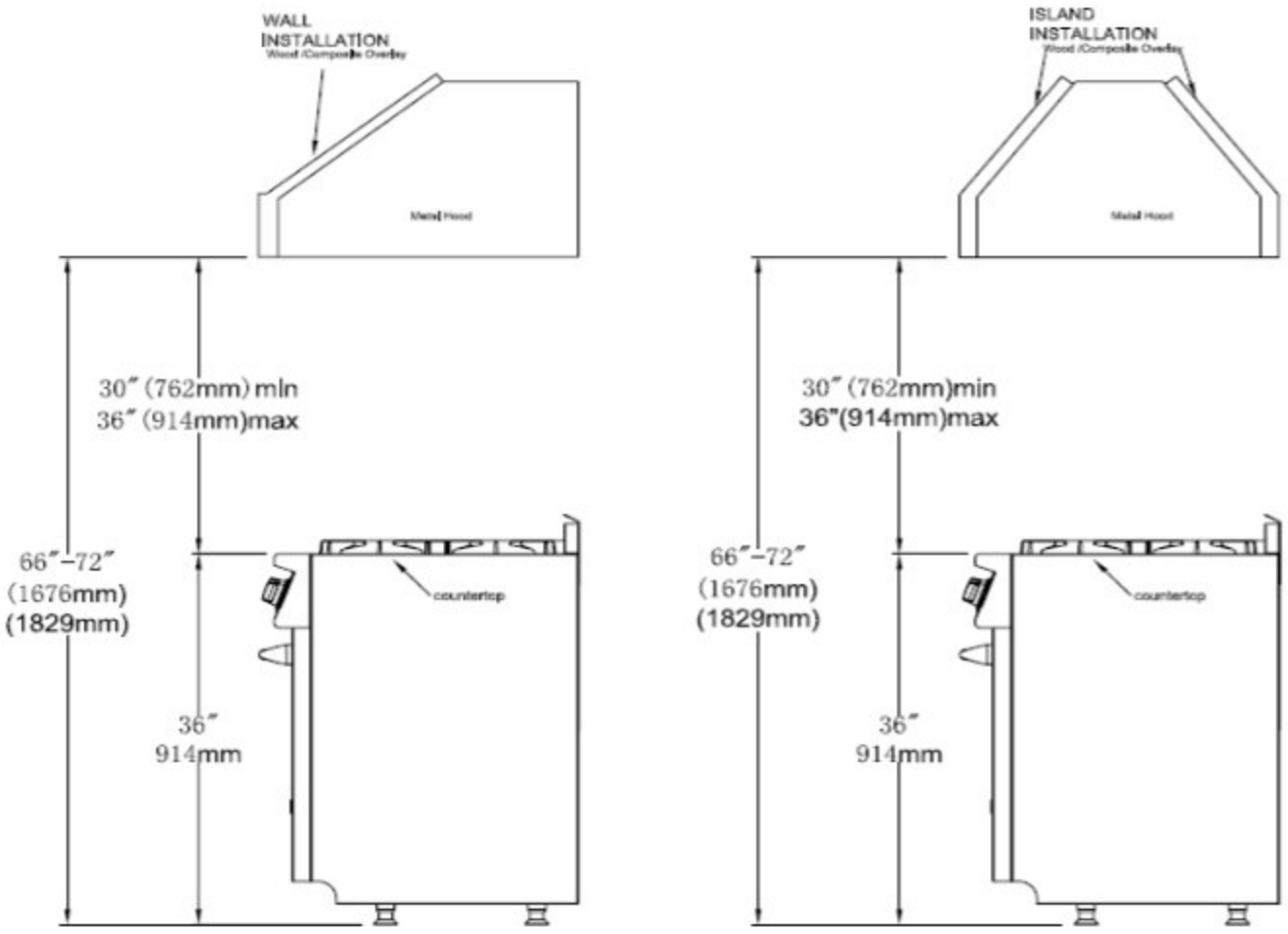

Hood Installation Guidelines

The bottom of the hood should be positioned 30" to 36" above the countertop, which typically places it 66" to 72" above the floor. These clearances help ensure safe and efficient hood operation.

After Installation:

- Cooktop Burners: Verify that each burner ignites properly.
- Air Shutter Adjustment: Ensure the flame is a sharp blue color, with no yellow tipping or lifting.
- Oven Burner Ignition: Confirm that the oven burner lights correctly.
- Tubular Burner Re-Ignition: For ovens with a tubular burner, visually check that both rows of burner ports re-ignite as intended.
- Gas Leak Check: Inspect all gas connections for leaks using a gas detector—never use an open flame.
- Oven Functions: Test the oven's bake and convection bake functions to verify proper operation.

COOKTOP OPERATION

Surface Burner Ignition



Push to release gas.



Turn to Ignite and 'Hi' position.





Adjust to appropriate

Lighting the Surface Burners

Ignition: To light a surface burner, push and turn the corresponding control knob counterclockwise to the "Hi" position. You will hear a clicking noise as the electric igniter sparks the burner.
Flame Adjustment: Once the burner is lit, adjust the knob to set the desired flame size. If the knob remains at "Hi," the burner will continue to click.

NOTE: When any burner is turned to "HI," all burners will spark. Do not disassemble or clean around any burner while another burner is on. Never touch a burner cap, burner base, or igniter while the igniters are sparking.

Hi	Ignites the burners.
Simmer	Melting small quantities, steaming rice, warming food, melting chocolate or butter.
Low	Melting large quantities.
Low-Medium	Low-temperature frying, simmering large quantities, heating milk, cream sauces, gravies.
Medium	Sautéing and browning, braising, pan-frying, maintaining slow boil on large quantities.
Medium – Hi	High-temperature frying, pan boiling, maintaining slow boil on large quantities.
Hi	Boiling liquid quickly, deep frying.

Simmer and Boil

- A smaller flame will give the best simmer results. Small flames offer precise cooking performance for delicate foods, keeping food warm, melting chocolate or butter, and for cooking that need to cook over low heat for a long time.
- The highest (larger) flame settings provide the maximum heat that is available on your range. This setting should be used for heavy cooking loads such as water boiling and pasta cooking.

Flame Size

- When you select the flame size, watch the flame when you turn the knob.
- Any flame larger than the bottom of the cookware is wasted.
- The flame should be steady and blue in color. Foreign material in the gas line may cause an orange flame during initial operation.





Approximate 1 1/2" Flame Height

Power Failure

- If the gas does not ignite within four seconds, turn off the valve and allow at least five minutes for any gas to dissipate. Repeat the lighting procedure.
- If the power fails, the surface burners can be lighted manually. Hold a lighted match near a burner and turn knob counterclockwise to "HI". After burner lights, turn knob to setting.

Cooktop

- To prevent the cooktop from discoloring or staining, clean cooktop after each use, and wipe up acidic or sugary spills as soon as the cooktop has cooled.
- The sealed burners of your range are not secured to the cooktop and are designed to be removed. Boil overs or spills will not seep underneath the cooktop. The burners should be cleaned after each use.

COOKTOP OPERATION

Oven Vent

- Do not block the ducts at the rear of the range when cooking in the oven. It is important that the flow of hot air from the oven and fresh air into the oven burner never be interrupted. Avoid touching the vent opening or nearby surfaces during oven or broiler operation – they may become hot.

WARNING

FOOD SAFETY

According to the United States Department of Agriculture: DO NOT hold foods at temperatures between 40°F to 140°F more than 2 hours. Cooking raw foods below 275°F is not recommended.

WARNING

Never use this appliance as a space heater to heat or warm the room, Doing so many result in carbon monoxide poisoning and overheating of the oven. Never use this appliance as a storage space and storage cabinet areas

WARNING

Never use this appliance doors or drawers such as stepping.
Leaning or setting on the doors or drawers, may result in hazards and injuries

Burner Grates

1. The grates must be properly positioned before cooking. Improper installation of the grates may result in scratching of the cooktop and / or poor combustion.
2. Do not operate the burners without a pan or utensil on the grates





OVEN OPERATION

WARNING

DO NOT cover any slots, holes or passages in the oven. DO NOT cover the oven racks with materials such as aluminum foil. Doing so blocks air flow through the oven and affect cooking performance. Aluminum foil lining may also trap heat, causing a fire hazard. Do not use Aluminum Foil on any porcelain surface. Doing so will damage the porcelain

Oven Function

Bake

The BAKE mode is used to prepare a variety of food using heated air in the oven. Refer to recipes from cook books and food websites or packaging directions for oven temperature settings, preheat and baking times.

Rotate the Oven Temperature Control Knob to the recommended temperature setting. The Oven Cycle Light shall turn on to indicate oven is in operation. In PREHEAT, the upper and lower heating elements shall turn on and off, intermittently. The Oven Cycle Light shall turn off when the temperature is reached.

Keep the oven door closed to minimize heat loss. Use the oven light switch to turn on the oven light and see the inside of oven without opening door.

Convection Bake

Heat is transferred from the lower heating element located in the bottom of the oven cavity. The convection fan in the rear of the oven then circulates it. This convection process provides even heat distribution throughout the oven cavity. Multiple rack use is possible for large baking jobs. Convection cooking is faster, can be accomplished at lower temperatures and provides even temperatures than regular cooking.

To use convection, follow the steps similar to standard BAKE, then press the convection fan switch to ON position.

Keep the oven door closed to minimize heat loss. Use the oven light switch to turn on the oven light and see the inside of oven without opening door. For best result, use shallow uncovered pans and cookie sheet without sides.

Broil

The intense heat from the upper heating element is used to cook thin slices of meat, poultry and fish. The heating element coils turns red when the oven control knob is set to BROIL. Place food in the recommended rack position after the oven has completed the PREHEAT cycle. Refer to recipes or packaging for broiling instructions and cook times.

Rotate the Oven Temperature Control Knob to the BROIL position. The Oven Cycle Light shall turn on to indicate oven is in operation. The upper heating elements is energized to maintain 550°F.

Keep the oven door closed. Use the oven light to see inside of oven

OVEN OPERATION

The oven-knob displayed temperature is set to match the oven temperature with the convection mode on. When using the oven with the convection feature off, the temperature inside the oven could be between 25 to 50 degrees lower than the knob indicates.



BEFORE USING THE APPLIANCE – it is recommended that the oven be turned on to burn off the manufacturing oils. Set the oven control knob to 450˚F (230˚C) and let the oven run for 20 to 30 minutes. Turn on the range hood to remove odors or smoke away from the kitchen. Turn off appliances when done. Please note that the cooling fan shall continue to run until such time that the oven has cooled down. This is normal oven operation.



DO NOT use aluminum foil on the porcelain surface area of the oven. DOING SO WILL DAMAGE THE PORCELAIN.

BROILER OPERATION

Note: Door must be closed during broiling operation.

Broiling is a method of cooking tender cuts of meat directly under the infrared broiler in the oven . Broiling in the oven is accomplished with the oven door closed. It is normal and necessary for some smoke to be present to give the food a broiled flavor.

Preheating

Preheating is suggested when searing rare steaks (Remove the broiler pan before preheating with the infrared broiler. Foods will stick on hot metal). To preheat, turn the "Oven" selector knob to the "Broil" position. Wait for the burner to become hot, approximately 2 minutes. Preheating is not necessary when broiling meat well-done.

To Broil

Broil one side until the food is browned; turn and cook on the second side. Season and serve. Always pull the rack out to the "stop" position before turning or removing food.

Setting Broil

The "Oven" selector knob controls the Broil feature. When broiling, heat radiates downward from the oven broiler for even coverage. The Broil feature temperature is 500˚F (260˚C).

The broil pan and insert used together allow dripping grease to drain and be kept away from the high heat of the oven broiler. **DO NOT** use the broil pan without the insert. **DO NOT cover the broil pan insert with foil.** The exposed grease could catch fire.

To set the oven to Broil:

1. Place the broiler pan insert on the broiler pan. Then place the food on the broiler pan insert
2. Arrange the interior oven rack and place the broiler pan on rack. Be sure to center the broiler pan and position directly under the broil burner. If preheating the broil burner first, position the broiler pan after the broil burner is preheated.
3. Turn selector knob to Broil.

The oven indicator light will remain on until the selector knob is turned to the off position or the temperature control cycles off.

GRIDDLE OPERATION

(if equipped on your model)

Before Using the Griddle

1. Clean the griddle thoroughly with warm, soapy water to remove dust or any protective coating.
2. Rinse with clean water and wipe off to dry with soft, clean, lint-free towel/cloth.
3. A stainless steel cover that is sized to fit on top of the surface when the griddle is not being used is provided. Please note – the cover must be removed before turning the griddle on.
4. Make sure the grease tray is under the front edge of the griddle. Position the tray under the griddle overhang to catch grease or food residue.

Use of the Griddle

1. Push and turn the control knob counter-clockwise to the preferred cooking temperature.
2. Preheat the griddle for 10-12 minutes
3. When the griddle is preheated to the desired temperature, the indicator light will turn on.
4. Butter or cooking oil can be added for more flavor, then place the food to cook.

CAUTION:
The surface of the griddle is hot after use. Please allow sufficient time for the griddle to cool prior to cleaning.

When using the appliance or the first time, the oven and broiler burners should be turned on the burn off the manufacture oils. Turn the oven on the 450 [230 for 20 to 30 minutes, then turn the oven control knob to "Broil" for the same length of time. It is recommended to turn on the ventilator above the range at this time

! WARNING

Before Baking or Broiling the oven and broiler should be turned on to burn off the manufacturing oils. Turn the oven on to 450°F (230°C) for 20 to 30 minutes; then turn the broiler to "Broil" for the same length of time. You may wish to turn on the ventilator above your range at this time.

CARE AND CLEANING

Cooktop

- To avoid electrical shock or burns, turn off all controls and ensure the cooktop is cool before cleaning.
- Before cleaning the cooktop, ensure that all burners are turned off and that all components are cool enough to safely touch.
- Do not use harsh or abrasive cleaning agents, waxes, polishes, or commercial cooktop cleaners to clean the cooktop.
- Use only a sponge, soft cloth, fibrous or plastic brush, and nylon pad for cleaning.
- Always dry components completely before using the cooktop.

Control Panel, Door Handle, Control Housing

- Clean the control panel, door handle and control housing with a solution of mild detergent and warm water.
- Do not use abrasive cleaners or scrubbers; they will permanently damage the finish.
- Dry the components with a soft, lint-free cloth.

Oven Window

- Clean all glass surfaces with a solution of mild detergent and hot water. Use a mild glass cleaner to remove fingerprint or smears.
- Dry completely with a soft, lint-free cloth.

Porcelain Surfaces

- Clean oven interior and inner door liners with a solution of mild detergent and hot water. Rinse and dry with a soft cloth. Do not use abrasives or commercial oven cleaners.

Stainless Steel Surfaces

- Do not use any cleaning product containing chlorine bleach.
- Do not use a steel-wool pad; it will scratch the surface.
- Use a hot, damp cloth with a mild detergent. Use a clean, hot, damp cloth to remove soap. Dry with a dry, clean cloth.
- Do not use aluminum foil on the stainless steel surfaces. Doing so will cause damages that affect the life of stainless steel.

CARE AND CLEANING

Metal Finishes

- Wash with soap and water, glass cleaner, or mild liquid sprays.

Plastic Finishes

- When control panel trim and end caps are cool, clean with soap and water, rinse and dry.
- Use a glass cleaner and soft cloth.

Oven Racks

- Clean oven racks with solution of detergent and hot water. To clean heavy soil, use a scouring pad such as steel wool with plenty of water.

Oven Frame

- Clean with hot water, soap-filled steel-wool pads or cleaners. Rinse well with clean water and dry.

Oven Gasket

- Do not clean the gasket. The fiberglass material of the oven door gasket cannot withstand abrasion.
- It is necessary for the gasket to remain intact.

Replacing the Oven Light

- Turn off the power at the main power supply.
- Remove the lens cover from the housing by pulling straight out.
- To prevent electrical shock or personal injury, make sure the oven and light bulb are cool and power to the oven has been turned off before replacing the light bulb. Make sure the lens cover is in place when using the oven.

Outer Oven Door

- Use soap and water to thoroughly clean the top, sides and front of the oven door. Rinse well. You may also use a glass cleaner to clean the glass on the outside of the door.
- Do not use oven cleaners, cleansing powders of harsh abrasives on the outside of the door.

Inner Oven Door

- Do not allow excess water to run into any holes or slots in the door. Any soap left on the liner causes additional stains when the oven is heated.
- Before you call for service, please review the potential problem / possible causes and remedies shown in the table below.

TROUBLESHOOTING

Before you call for service, please review the potential problem / possible causes and remedies shown in the table below.

Nothing works	Oven is not connected to the electrical power.	Have oven connected to a properly sized electrical power supply by a qualified electrician.
	Power supply is not energized.	Have an electrician check the power supply, including the house circuit breaker, wiring and fuses
Top burners do not light or do not burn evenly	Plug on range is not completely inserted in the electrical outlet.	Make sure the unit is properly connected to the power supply
	Burner holes on the side of the burner may be clogged.	Remove the burner heads and clean them. Check the electrode area for burned-on food or grease.
Burner flames very large and yellow.	Burner bezel ports are clogged.	Clean burner bezel ring ports with straightened paper clip, needle, or wire.
	Burner ports or burner caps are not positioned properly.	Remove and carefully re-install burner bezel and caps.
	Cooktop is being operated with the wrong type of gas.	Ensure that the type of cooktop matches the natural gas supply.
	Regulator is not installed, is faulty, or is set for the wrong type of gas.	Check installation, replace regulator, or set regulator for proper gas.
Sparking but no flame ignition.	Gas shut-off valve is in the 'OFF' position.	Turn shut-off valve to the 'ON' position.
Igniters spark continuously after flame ignition.	Power supply polarity is reversed.	Have polarity corrected.
	Igniters are wet or dirty.	Dry or clean igniters.
Burner flame goes out at low setting.	Low gas supply pressure.	Contact gas company.
	Air intake holes around knobs are obstructed.	Remove obstruction.
Oven will not heat	Oven settings are not corrected	Follow mode selection and clock settings as specified in Oven Operation section of the manual.
Foods over-cooked or under-cooked	Incorrect cooking time or temperature.	Adjust time, temperature, or rack position.
'Cracking' or 'Popping' sound.	This is the sound of metal heating and cooling.	This is normal.

WARRANTY

KUCHT Warranty covers defects in Parts and Labor for functional parts that are the result of normal usage for a period of time of 4 Years for Parts and Labor* from date of purchase. Functional parts are those components parts that are critical to the performance of the product's essential function. Nonfunctional parts are those that are not critical like knobs, handles, or cosmetic parts. KUCHT will repair or replace the unit or any parts, therefore, as required, subject to these terms and conditions.

General Conditions:

a. Warranty does not cover failure as a result of misuse, abuse, rust or corrosion, spilled liquids or foreign objects found inside the unit; repair of damage caused by accident, theft, fire, flood, external causes such as, but not limited to, blow fuses, inadequate electrical power, water and gas lines beyond the equipment, or any use of the product not authorized by the manufacturer.

b. The maximum liability of the warranty for product replacement or repair shall not exceed the original purchase price of the product.

c. KUCHT reserves the right to repair or replace the covered product with a comparable feature model of like kind.

d. Warranty does not cover deterioration of the appearance of the product, any cosmetic part such as paint, porcelain, glass, dents, scratches, chips, rust or peeling.

e. Any damage resulting from unauthorized replacement parts, improper service, or modifications made to the covered product are not covered.

f. KUCHT is released from all liability due to indirect, consequential, or incidental damages.

g. This warranty does not cover any damage to the product due to lightning, over-voltage, under-voltage, accident, misuse, abuse, negligence, or any damage caused by the use of the product by the purchaser or others. This warranty does not cover non-EWP products that have been exposed to wet or corrosive environments. This warranty does not cover stainless steel surfaces that have not been properly maintained.

h. Kucht Products are certified for use according to U.S. and Canada standards. The warranty coverage is limited to U.S. and Canada only. Kucht will not provide technical service or support in other countries. Replacement parts will only be shipped to continental U.S. and Canada addresses.

Kucht Liability is limited to the original price of the covered equipment.

(*): 4-Year Warranty period is valid for every appliance bought after September 1st, 2020 in the U.S. territory. – Not valid for accessories, parts, or wine coolers. All the appliances acquired before September 1st, 2020, and Wine Coolers, are covered with a 2-year warranty for parts and labor.

In addition, Kucht gives full UNLIMITED LIFETIME SUPPORT. This means that if our customers come across any problem after the warranty has expired, a qualified Kucht member will provide assistance using video chat in any repair process. Users and technicians will also have access to repair videos, tutorials, manuals, and any extra help that is available.

Warranty Exclusions

The Kucht LLC and KUCHT CARE LLC Limited Warranty covers residential installations only and is non-transferable to any other party.

Warranty is void when the product is installed in common areas where more than a single party has rightful access to its use or in locations considered beyond normal residential use.

Warranty does not apply to products installed or used in any commercial or non-residential application. Examples of excluded applications include, but are not limited to daycare centers, schools, bed and breakfast centers, churches, private clubs, fire stations, club houses, common areas in multi-family dwellings, restaurants, bakeries, hotels, nursing homes, food service locations and institutional food service locations or any similar institutional or commercial activity.



WARRANTY

RETURN POLICY

Kucht will accept return requests for purchases within the first 60 days after the shipping date. Shipping discrepancies or products that arrive damaged must be reported to Kucht Customer Support within 48 Hours of delivery in order to be eligible for a full refund of the unit value.

Once a return request is approved, Kucht will send a Return Merchandise Authorization (RMA). From this time, the customer will have 15 calendar days to return the item to Kucht.
All merchandise returned to Kucht must be in original packaging with all original items (e.g., manuals, remotes, cables, etc.) that came in the box. Returns with missing or damaged items will result in a partial refund.
Products and or Part(s) must be returned in "as new" condition, including: all components, manuals, registration cards, and original undamaged packaging. Anything missing or damaged will be deducted from the return amount.
After we receive and inspect the item(s), the refund will be processed, minus the original shipping cost.
Kucht won´t refund the original shipping cost in any case. There will not be refunds or compensations related to the shipping and handling of the products under any circumstances.

Returns without an RMA number will not be accepted and a credit will not be issued.

Additional shipping charges apply with shipments outside the 48 contiguous United States, expedited shipping, and oversized items. These additional shipping charges, such as taxes, customs duties, and fees are the responsibility of the purchaser.
Refunds will not be issued for any costs incurred by the consumer related to installation, handling, or additional services.

All merchandise returned to Kucht must be in its original packaging with all original items. If there is no box or if it is not the original, or if any components or accessories are missing, a 20% restocking fee will be charged.
After items are received, they will be inspected and every missing part will be charged on top of the restocking fee
If the return is "defective" there must be an open warranty case (called our customer service).
Products arriving damaged must be reported to Kucht customer service within 48 Hours of delivery to be eligible for a full refund. Otherwise, 100% of the value will be charged.

Returns for Standard Products

To initiate a return for a standard product, you must provide a minimum of 3 clear photographs showcasing various angles of the item within its original shipping container. This requirement is designed to confirm that the product is undamaged before we initiate the return process. In some cases, we may request additional photographs or videos for replacement processing.

Returns/Reships/Exchanges due to Shipping Damage

Before shipping, every product from Kucht undergoes individual inspection to ensure they leave our facilities in pristine condition. If your item(s) arrive damaged, we can arrange for a swift replacement, provided you give us sufficient time to file a claim with the carrier. Please inspect products upon delivery, and report any damage immediately.

To report shipping damage, notify us within 5 days of receiving the product. Your report must include at least 3 photographs clearly showing the damaged item and/or shipping container, along with the tracking number for your order. Please note that box damage is not considered, and the box must be opened to reveal clear evidence of product damage. Additional photographs or videos may be requested for replacement processing.
Failure to report shipping damage within 5 business days of delivery may result in additional shipping fees for returns, reships, and exchanges. Claims reported after 5 days may also be subject to denial.

Returns/Reships/Exchanges due to Concealed Damage

If your item(s) arrive with concealed damage, we can arrange for a prompt replacement, provided the box itself is undamaged. You must notify us of concealed damage within 30 days of receiving the product.

Returns, reship, and exchanges for concealed damage can be facilitated between 31 and 60 days following the date of delivery, but shipping fees will apply in accordance with our pricing and carrier guidelines.

For all concealed damage returns, we require a minimum of 3 photographs from multiple angles clearly showing the damaged product. Additional photographs or videos may be requested for replacement processing.

Installation and Usage Considerations

Before installing your unit, please conduct a functionality test by plugging it in and ensuring it works correctly. If the unit does not function, please contact our customer service immediately by calling 866-685-8248. Please be aware that Kucht does not accept exchanges or returns for damaged products once they have been fully installed or used.

Missing Pieces

If you are missing pieces from your shipment, please report this within 30 days of receiving the product to allow our team time to file a claim with the carrier. Contact our Customer Service Department at 866-685-8248 for assistance in these matters.

Partial Damage

Requests for parts replacement due to partial damage from shipping will be processed free of charge until 60 days following the date of delivery for select components. For reports made more than 60 days after delivery, the necessary parts will need to be purchased. Please consult your account manager or our Dealer Service team for specific details and limitations.

Please note that returns requested more than 60 days following the date of delivery will not be accepted.

Freight Return Policy

When signing for delivery, even if the package appears slightly damaged, please write “Package Damaged.” If the package is significantly damaged, you have the option to refuse delivery. In such cases, please notify us so that we can expect the return shipment. We will order a replacement as soon as we confirm the return to our facility.

If you have already accepted the package and notice missing or damaged parts, please contact us within 30 days, and we will ship replacement parts free of charge. If we cannot replace the parts, our carrier will pick up the original package, and we will send you a full replacement, provided we were notified in time to file a claim with the carrier (within 30 days).

For products with manufacturer’s defects, we can either replace the defective part or, if necessary, the entire unit.

Important Notes: All returns must receive prior authorization from Kucht before shipment. Shipping charges, customs duties, brokerage fees, and local taxes are not refundable. Special-order items or altered items cannot be returned.

FOR MORE INFORMATION VISIT WWW.KUCHT.COM/ONLINE/WARRANTY/

KUCHT
Professional

WE TRANSFORM A SIMPLE KITCHEN INTO A PRO ONE.
THIS IS WHY WE CARE ABOUT MAKING VERY HIGH PERFORMANCE
RANGES AND HOODS, TO MAKE YOU FEEL LIKE A PRO AND STYLISH COOKER.

DESIGN: LONDON DC - WWW.LONDON-DC.COM