KUCHT Professional

WWW.KUCHT.COM

KX SERIES



HORUS DIGITAL DIAL THERMOSTAT™

PROFESSIONAL-STYLE

DUAL FUEL RANGE

INSTALLATION AND USER MANUAL

APPLICABLE MODEL: KXP30-SS, KXP30-GL, KXD30, KXD30-TT, KXP36-SS, KXP36-GL, KXD36, KXD36-TT, KXP48-SS, KXD48, KXP48-GL, KXD48-TT, KXP60-SS, KXP-60-GL, KXD60

Thank you for purchasing your KX SERIES pro-style range. We appreciate your business and we recommend that you read this **entire user's manual before operating your new appliance** for the first time.

This manual contains instructions on how to properly install and set up your new range, as well as insights into many of the unique features that our product offers. Please keep this manual for future reference, as it contains the answers to questions that you might have as you begin to cook.

WELCOME TO THE KUCHT FAMILY

State of California Proposition 65 Warning: The burning of gas cooking fuel generates some by-products that are on the list of substances which are known by the State of California to cause cancer or reproductive harm. California law requires businesses to warn customers of potential exposure to such substances. To minimize exposure to these substances, always operate this unit according to the use and care manual, ensuring you provide good ventilation when cooking with gas.

TABLE OF CONTENTS

Safety Instructions 4

Unpackage instruction 6

Installation Instructions 8

Cooktop Operation 18

Oven Operation 23

Care & Cleaning 28

Troubleshooting 30

! WARNING

If the information in this manual is not followed exactly, a fire or an explosion may result causing property damage, personal injury or even death.

Do not store or use gasoline, liquid propane cylinder or other flammable vapors and liquids in the vicinity of this appliance.

What to do if you smell gas?

Do not try to light any appliance.

Do not touch any electrical switch.

Do not use any phone in your residence.

Immediately call your gas supplier from a neighbor's phone. Follow the gas supplier's instructions.

If you cannot reach your gas supplier, call the fire department.

For installation and service of your range product, it must be performed by a licensed installer, an approved service agency or your gas supplier.

SAFETY INSTRUCTIONS

Definitions

 This is a safety alert symbol. It will alert you to potential personal or property safety hazards. Obey all safety messages to avoid any property damage, personal injury or death.



WARNING indicates a potentially hazardous situation which, if not avoided, could result in serious injury or death.

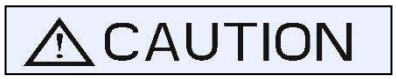

CAUTION indicates a moderate hazardous situation which, if not avoided, could result in minor or moderate injury.

CAUTION

CAUTION – when used without the safety alert symbol, indicates a potentially hazardous situation which, if not avoided, could result in property damage.

IMPORTANT

IMPORTANT used for installation, operation and maintenance information that are not related to safety.

If the information in this manual is not followed exactly, a fire or an explosion may result causing property damage, personal injury or even death.

Do not store or use gasoline, liquid propane cylinder or other flammable vapors and liquids in the vicinity of this appliance.

Save this manual for future references.

SAFETY INSTRUCTIONS

What to do if you smell gas?

- Do not try to light any appliance.
- Do not touch any electrical switch.
- Do not use any phone in your residence.
- Immediately call your gas supplier from a neighbor's phone. Follow the gas supplier's instructions.
- If you cannot reach your gas supplier, call the fire department.

IMPORTANT

The installation and service of your range product must be performed by a licensed installer, an approved service agency or your gas supplier.

⚠ WARNING

⚠ WARNING



Tip-Over Hazard

A child or adult can tip the range and be killed.

Verify the anti-tip bracket has been installed.

Ensure the anti-tip bracket is engaged when the range is moved.

Do not operate the range without the anti-tip bracket in place.

Failure to follow these instructions can result in death or serious burns to children and adults.

Show specific manufacturer illustrations for checking installation/engagement of anti-tip brackets.

CONSUMER INFORMATION — THE INSTALLER SHALL NOT REMOVE

Before removing label, ensure anti-tip bracket is properly installed.

To reduce the risk of tipping the appliance, the appliance must be secured by properly installed anti-tip device packed with the appliance.

All ranges can tip and cause injuries.

Install anti-tip device packaged with range

Follow all Installation Instructions.

Make sure the anti-tip bracket is installed:

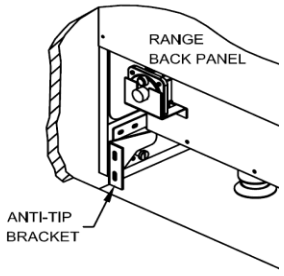

Slide range forward.

Make sure the anti-tip bracket is securely attached to the wall behind the range.

Safely tilt the front of the range upward slightly and move back against wall, Making sure the pin slides under bracket.

UNPACKING AND HANDLING

WARNING

Extremely Heavy.

Proper equipment and adequate manpower when move the range to avoid personal injury or damage to the unit or the floor. The unit is heavy and rests on adjust able steel legs.

Failure to follow this advice may result in damage or personal injury.

WARNING

DO NOT lift range by the oven door handles !

SAFETY INSTRUCTIONS

WARNING

Do not store or use gasoline, liquid propane cylinder or other flammable vapors and liquids in the vicinity of this appliance.

The installation and service of your range must be performed by a qualified installer, an approved service agency or the gas supplier.

Gas appliances can cause minor exposure to four of these substances, namely benzene, carbon monoxide, formaldehyde and soot, caused primarily by the incomplete combustion of natural gas fuel. When operating your range on natural gas, the flames from the burners should be blue in color. In addition, the flames should be stable, free of yellow tipping, excessive noise and lifting. However, this yellow tipping should be restricted to the primary flame kernels only. Properly adjusted burners, indicated by a bluish rather than a yellow flame, will minimize incomplete combustion. Exposure to those substances can be minimized by venting with an open window or use of a ventilation fan or hood.

ELECTRICAL GROUNDING INSTRUCTIONS

IMPORTANT

This indoor cooking appliance is equipped with a four-prong (grounding) plug for your protection against shock hazard and should be plugged directly into a properly grounded three-pronged receptacle. DO NOT cut or remove the grounding prong from this plug.

Electrical Requirements

Power: 240V – 40A

Plug Type: Four-Prong, Nema 14-50P



INSTALLATION AND OPERATION INSTRUCTIONS

To ensure proper and safe operation, read all instructions before using the product. Install or locate the product only in accordance with the provided Installation Instructions.

WARNING

- All servicing should be performed to a qualified technician.
- Do not attempt to adjust, repair, service or replace any part of your appliance unless it is specifically recommended in this guide.
- Do not use the range for warming or heating the room.
- Do not leave children alone or unattended in the area where the range is in use. Never allow them to sit or stand on any part of the range. Do not let children play with the range.
- Have the technician show you the location of the gas shut off valve and how to shut it off in an emergency situation.
- Always disconnect power to appliance before any type of servicing.
- Do not use abrasive or caustic cleaners or detergents on this appliance. They may cause permanent damage to the surface.
- When cooking, set the burner controls so that the flame heats only the bottom of the utensil and does not overlap at the sides of the utensil.
- Utensils (pots and pans) that conduct heat slowly, i.e. glass pots, should be used in conjunction with burner flames at a low or medium setting.
- Turn off all controls and wait for appliance parts to cool down before touching them. Do not touch the burner grates or surrounding areas until cool.
- Do not use water on grease fires.
- Clean appliance with caution.
- Always turn pot handles to the side or back of the range. Do not turn handles towards the area where they can be easily burned. Handles should not extend over the adjacent burners.
- Use the range only for cooking tasks as outlined in this manual. When using the range, do not touch the grates, burner caps, burner bases, or any other parts in proximity to the flame. These components may be hot enough to cause burns.
- Use dry pot holders. Moist or damp pot holders on hot surfaces may result in burns from steam.
- Remove pot holder away from hot surface areas.
- Do not use a towel or other bulky cloth.
- Do not heat unopened food containers. Build up of pressure may cause the container to explode and result in injury.
- During and after use, do not touch interior surfaces of the oven until cool.

INSTALLATION INSTRUCTIONS

IMPORTANT

Keep appliance area clear and free from combustible materials, gasoline, and other flammable vapors.

Gas Supply Requirements

Installation of this range must conform with local codes, or in the absence of local codes, the National Fuel Gas Code, ANSI Z223.1 / NFPA 54. In Canada, installation must conform to the current natural Gas Installation /code, CAN 1-1.1-M81 and with local codes where applicable. This range has been design-certified according to ANSI Z21.1b-2012 latest edition.
A statement of the maximum gas supply pressure in accordance with the inlet pressure rating of the gas appliance pressure regulator supplied.

MINIMUM GAS SUPPLY PRESSURE TO APPLIANCE FOR LP GAS---14.0 IN.W.C.
MINIMUM GAS SUPPLY PRESSURE TO APPLIANCE FOR NG --- 6 IN.W.C.
APPLIANCE REGULATOR IS SET AT 5.0 IN. W.C. OUTLET PRESSURE.

Do not obstruct the flow of combustion air into the range and ventilation air away from the range.

Ventilation: it is recommended that the unit be operated with an oven head, vented exhaust hood of sufficient size and capacity.

Before installing the range, you must locate and secure the included anti-tip bracket to the wall for your range.

⚠CAUTION

The use of cabinets for storage above the appliance may result in a potential fire hazard. Combustible items may ignite; metallic items may become hot and cause burns. If a cabinet storage is to be provided, the risk can be reduced by installing a range hood that projects horizontally a minimum of 5" (12.7cm) beyond the bottom of the cabinets.



The appliance shall not be used for space heating. This information is based on safety considerations. All openings in the wall behind the appliance and in the floor under the appliance shall be sealed.

INSTALLATION INSTRUCTIONS

Dimensions and Clearances

The range may be installed flush to the rear wall. You may install a non-combustible material on the rear wall above the range and up to the vent hood. It is not necessary to install non-combustible materials behind the range below the counter top height.

The minimum distance from the side of the range above the counter top to combustible sidewalls must be at least 10 inches.

INSTALLATION INSTRUCTIONS

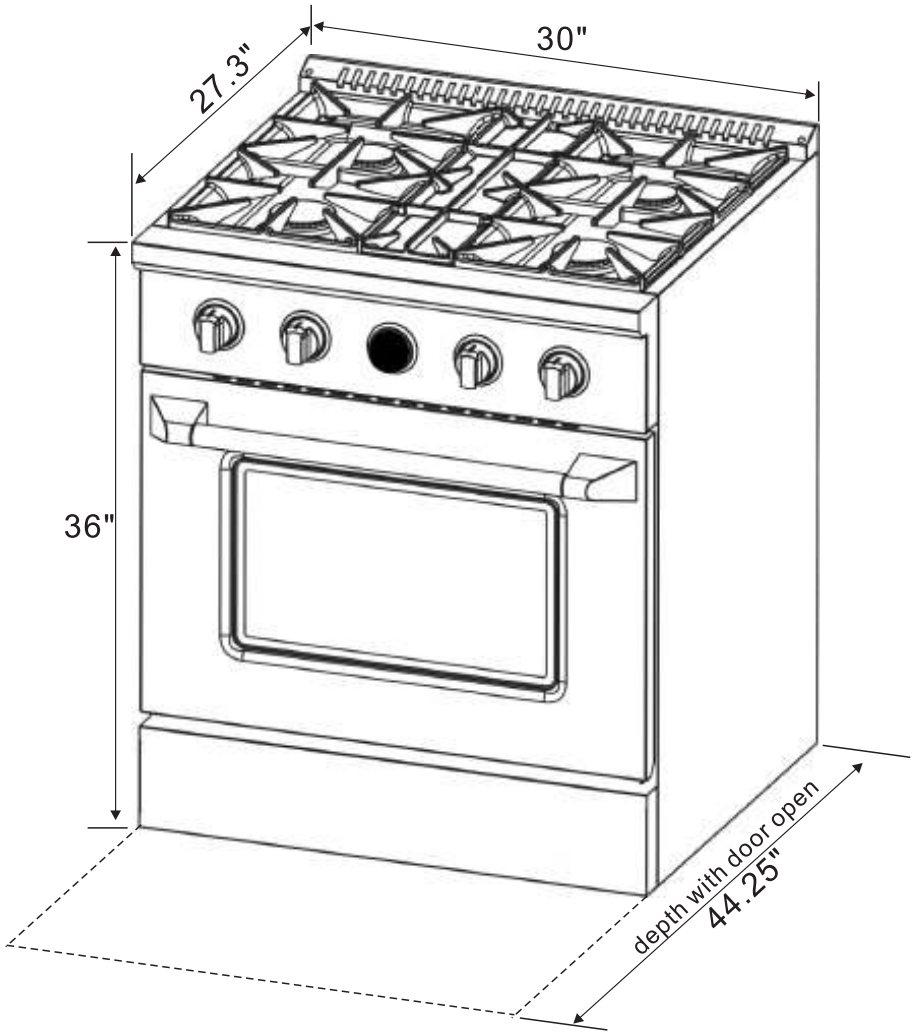

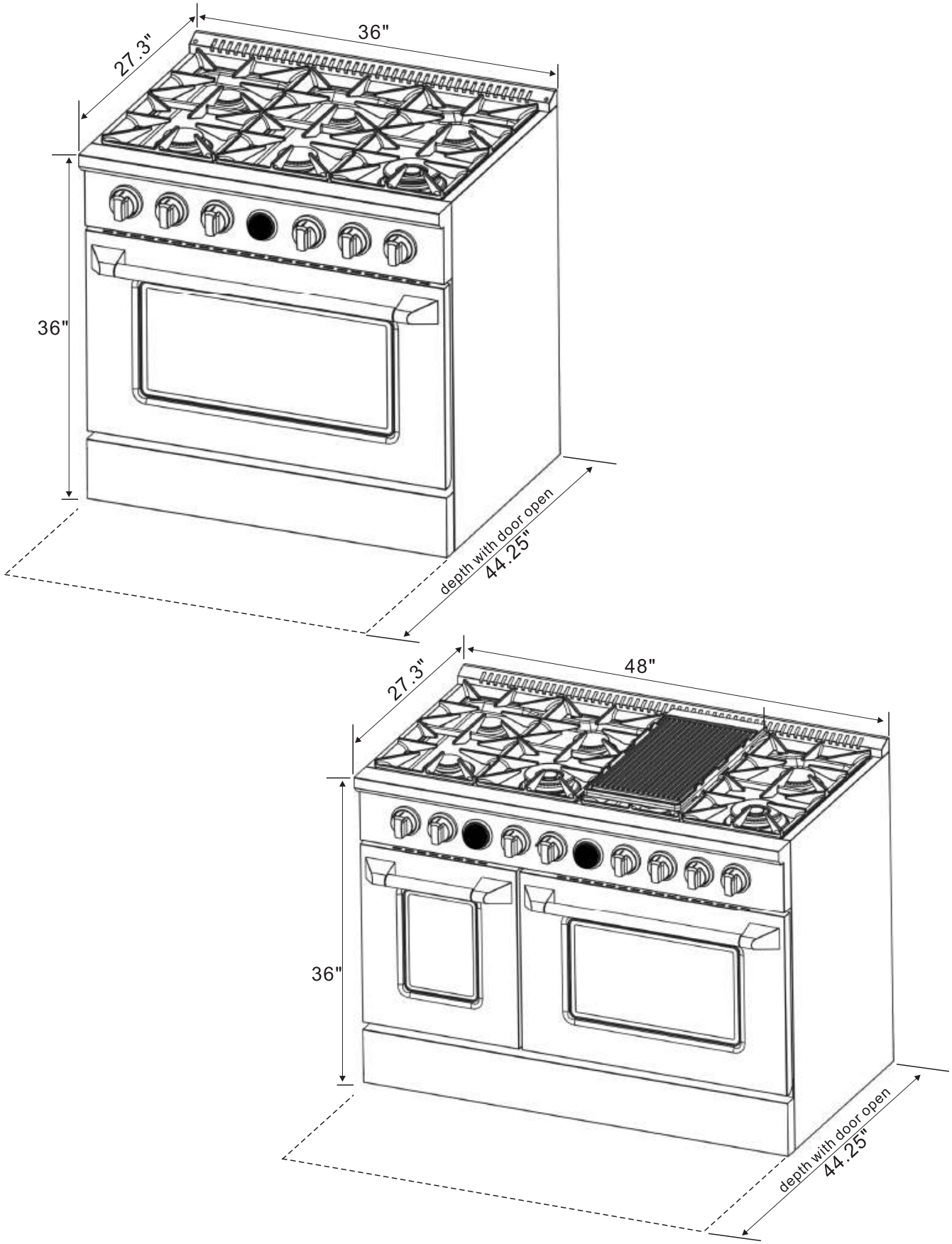
27.3"
36"
36"
depth with door open
44.25"
27.3"
48"
36"
depth with door open
44.25"

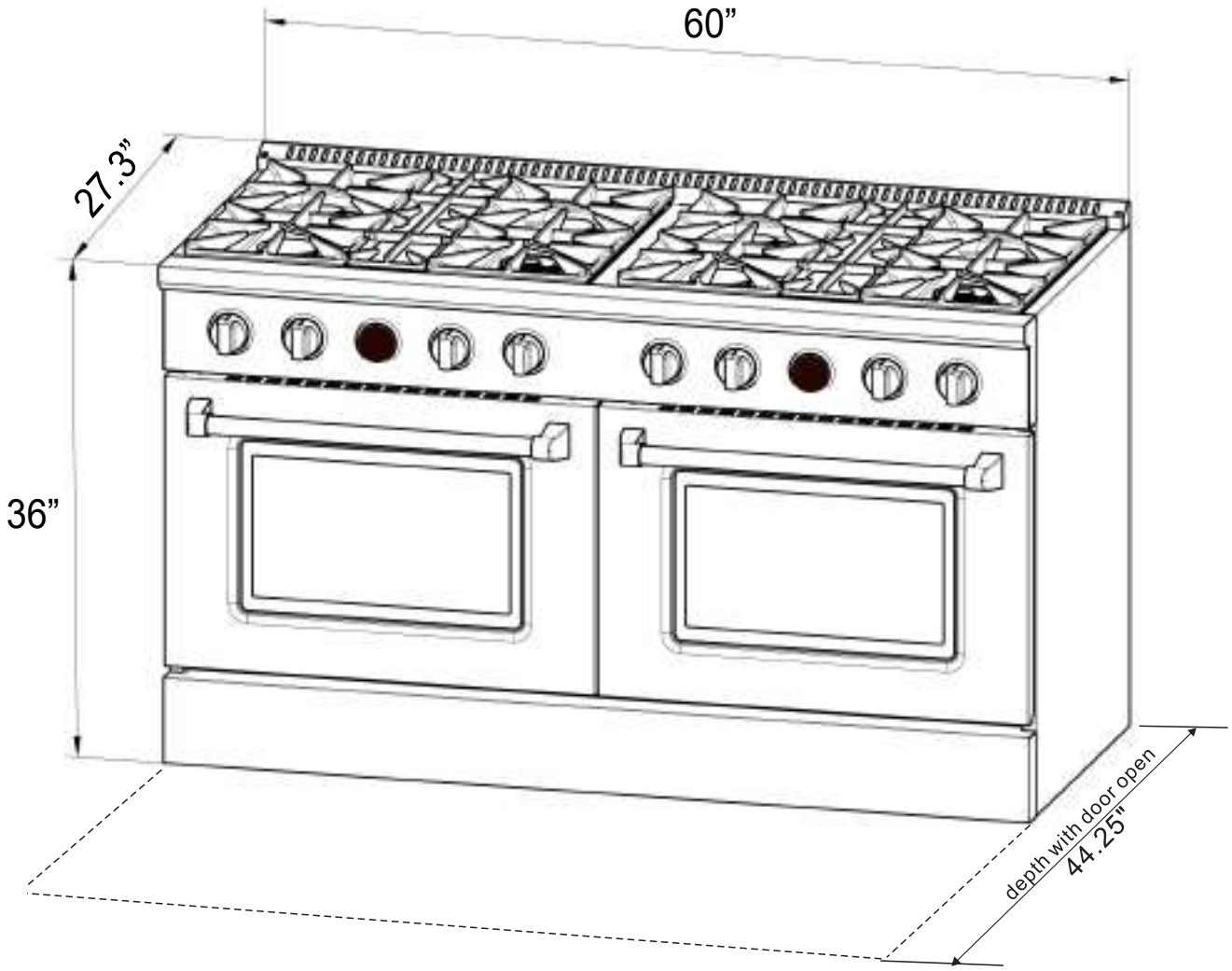
60”
27.3”
36”
depth with door open
44.25”

Installation

Dimensions and Clearances

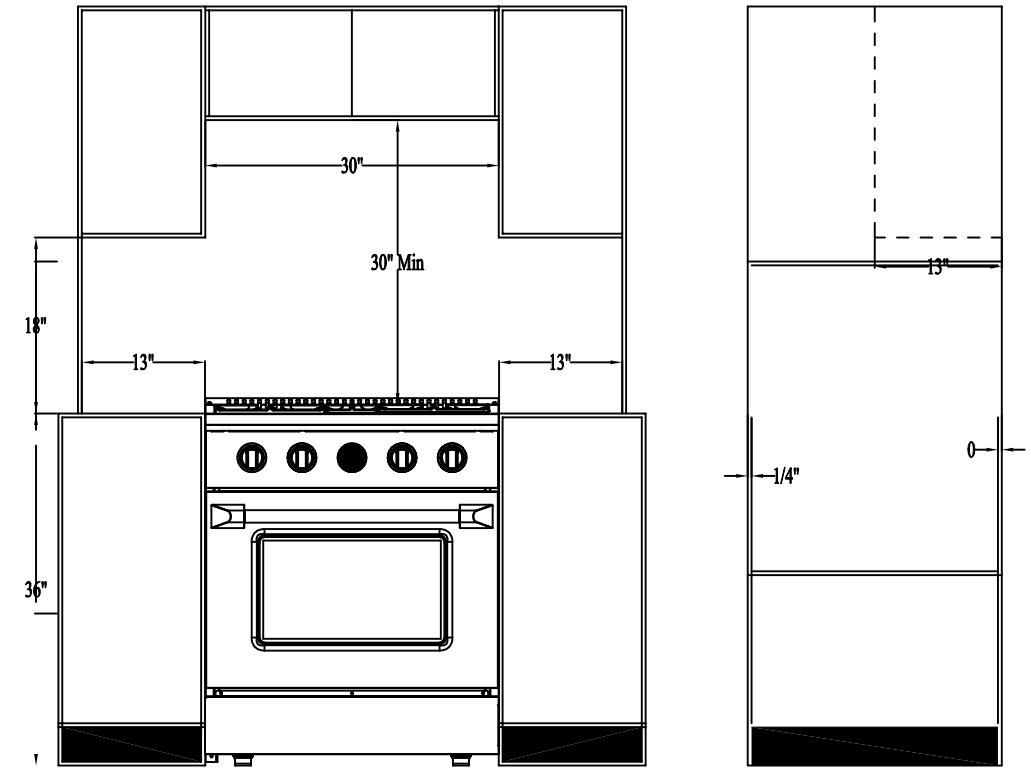

Installation Diagram

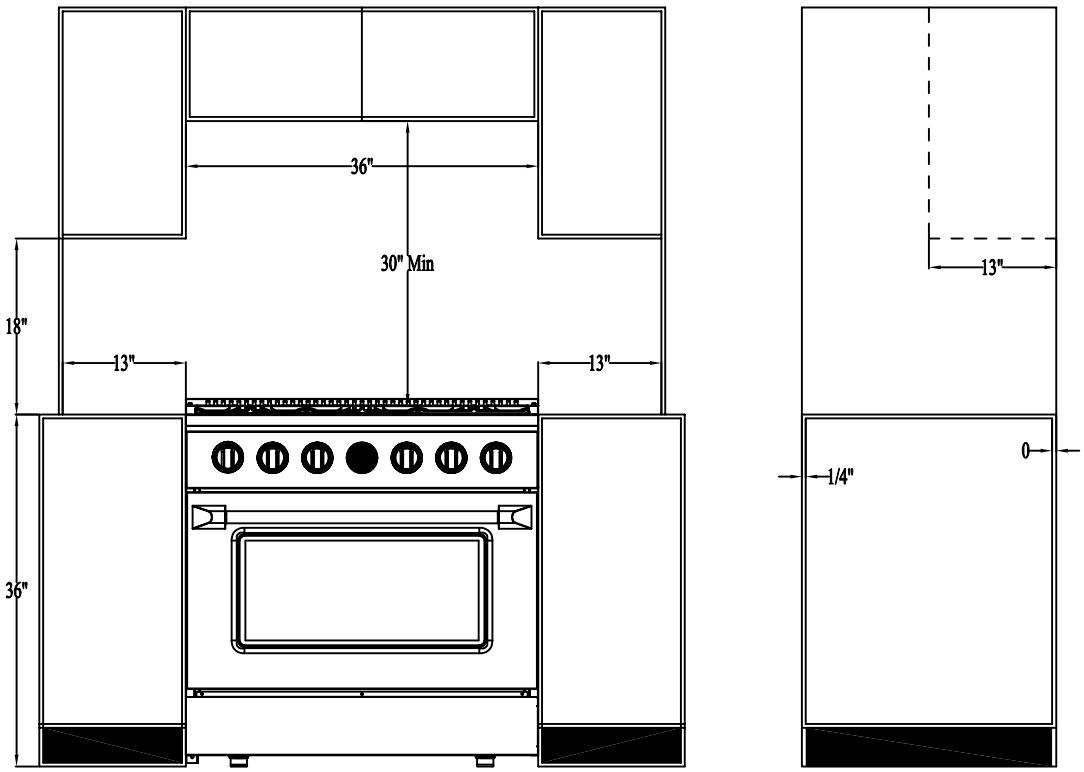

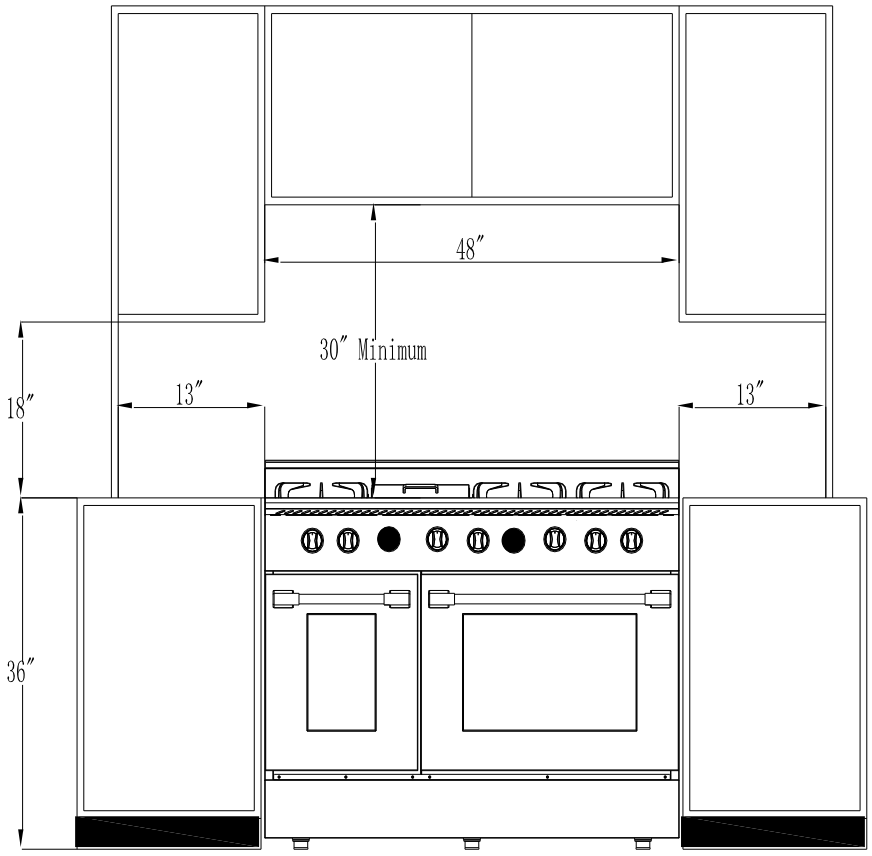

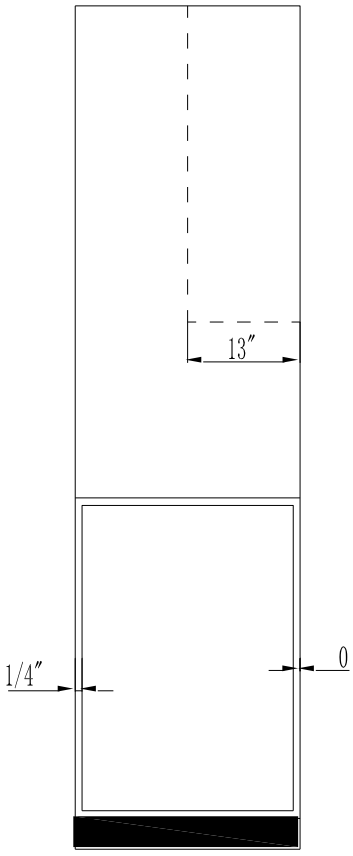

Installation Diagram

Installation

Electric Power Supply Requirements

Your range must be electrically grounded in accordance with local codes or, in the absence of local codes, in accordance with the National Electrical Code (ANSI/NFPA 70, latest edition). In Canada, electrical grounding must be in accordance with the current CSA C22.1 Canadian Electrical Code Part 1 and/or local codes. A copy of this standard may be obtained from: National Fire Protection Association, 1 Batterymarch Park, Quincy, Massachusetts 02269-9101.

The power supply must be the correct polarity. Reverse polarity will result in continuous sparking of the electrodes, even after flame ignition. If there is any doubt as to whether the power supply has the correct polarity or grounded, have it checked by a qualified electrician.

Use 240V, 60Hz properly grounded branch circuit protected by a 30-amp or 40-amp circuit breaker or time delay fuse.

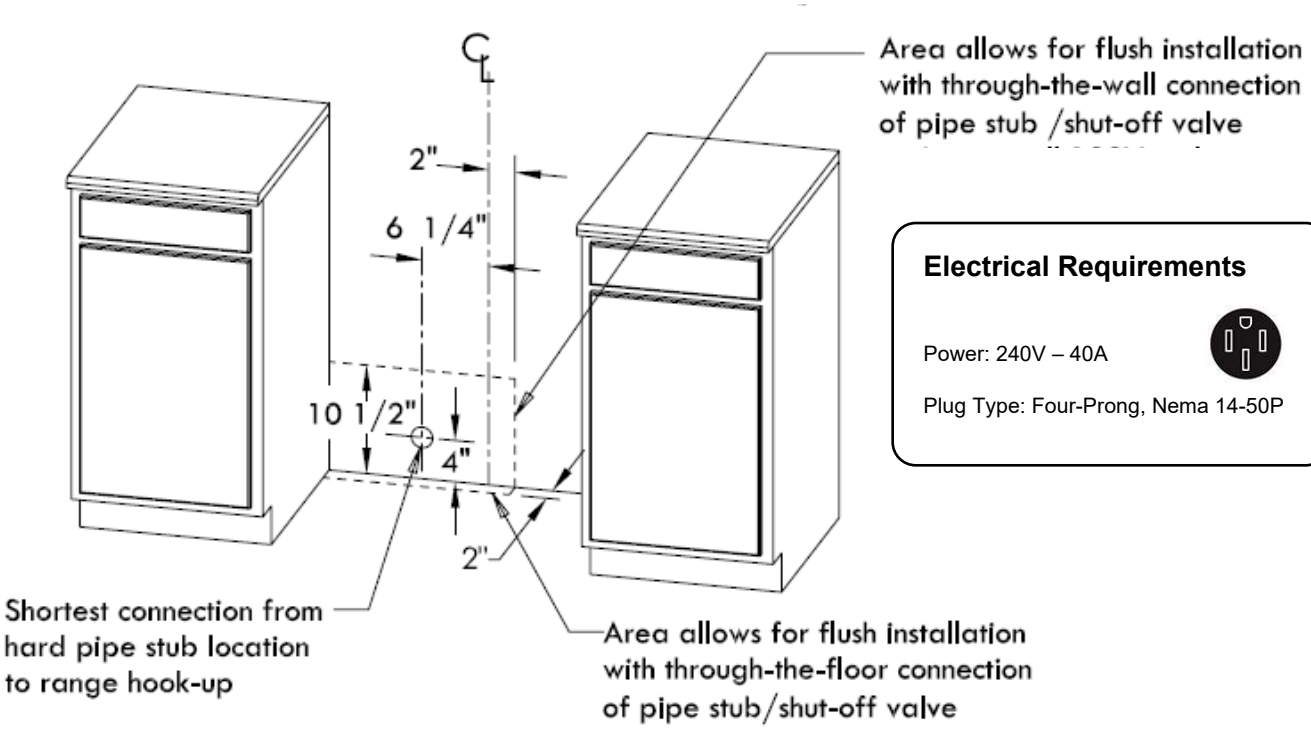

Electrical Requirements

Power: 240V – 40A

Plug Type: Four-Prong, Nema 14-50P

WARNING

Electrical Grounding Instructions: this indoor gas cooking appliance is equipped with a **four**-prong (grounding) plug for your protection against shock hazard and should be plugged directly into a properly grounded three-pronged receptacle.

Do Not cut or removes the grounding prong from the plug.

Caution Label all wires prior to disconnection when servicing controls. Wiring errors can cause improper and dangerous operation. Verify proper operation after servicing.

Grounding

- The power cord is equipped with a **four**-prong (grounding) plug which mates with a standard three-prong grounding wall receptacle to minimize the possibility of electrical shock hazard from the range.
- All cord connected appliance shall include instructions relative to location of the wall receptacle and a warning to the user to disconnect the electrical supply before serving the appliance.
- Where a standard two-prong wall receptacle is encountered, it is the responsibility and obligation of the customer to have it replaced with a properly grounded three-prong wall receptacle. Do not cut or remove the grounding prong from the power cord.

Connect Range to Gas Supply

- Install a manual gas line shut-off valve in the gas line in an easily accessed location outside the range in the gas piping external to the appliance for the purpose of turning on or shutting off gas to the appliance.

- Install male ½" flare union adapter to ½" NPT internal thread elbow at inlet of regulator. On models equipped with standard twin burners, install the male pipe thread end of the ½" flare union adapter to the ½" NPT internal thread at inlet of pressure regulator. Use a wrench on the regulator fitting to avoid damage.

- Install male ½" or ¾" flare union adapter to the NPT internal thread of the manual shut-off valve, taking care to secure the shut-off valve to keep it from turning.

- The gas supply pressure for checking the regulator setting is 6in (Natural Gas) and 11inch LP gas connect flexible gas line connector to the regulator on the range. Position range to permit connection at the shut-off valve.

- When all connections have been made, check that all range controls are in the "off" position and turn on the main gas supply valve.

- Leak testing of the appliance shall be conducted according to the manufacture's instructions .Use some soap water (50% water and 50% soap) or a leak detector at all joints and connections to check for leaks in the system. Do not use a flame to check for gas leaks.

- The appliance must be isolated from the building's gas supply piping system by closing its individual manual shut-off valve during any pressure testing of the gas supply piping system at test pressure equal to or less than ½ psig (3.5kPa).

Hood/Composite Overlay Install

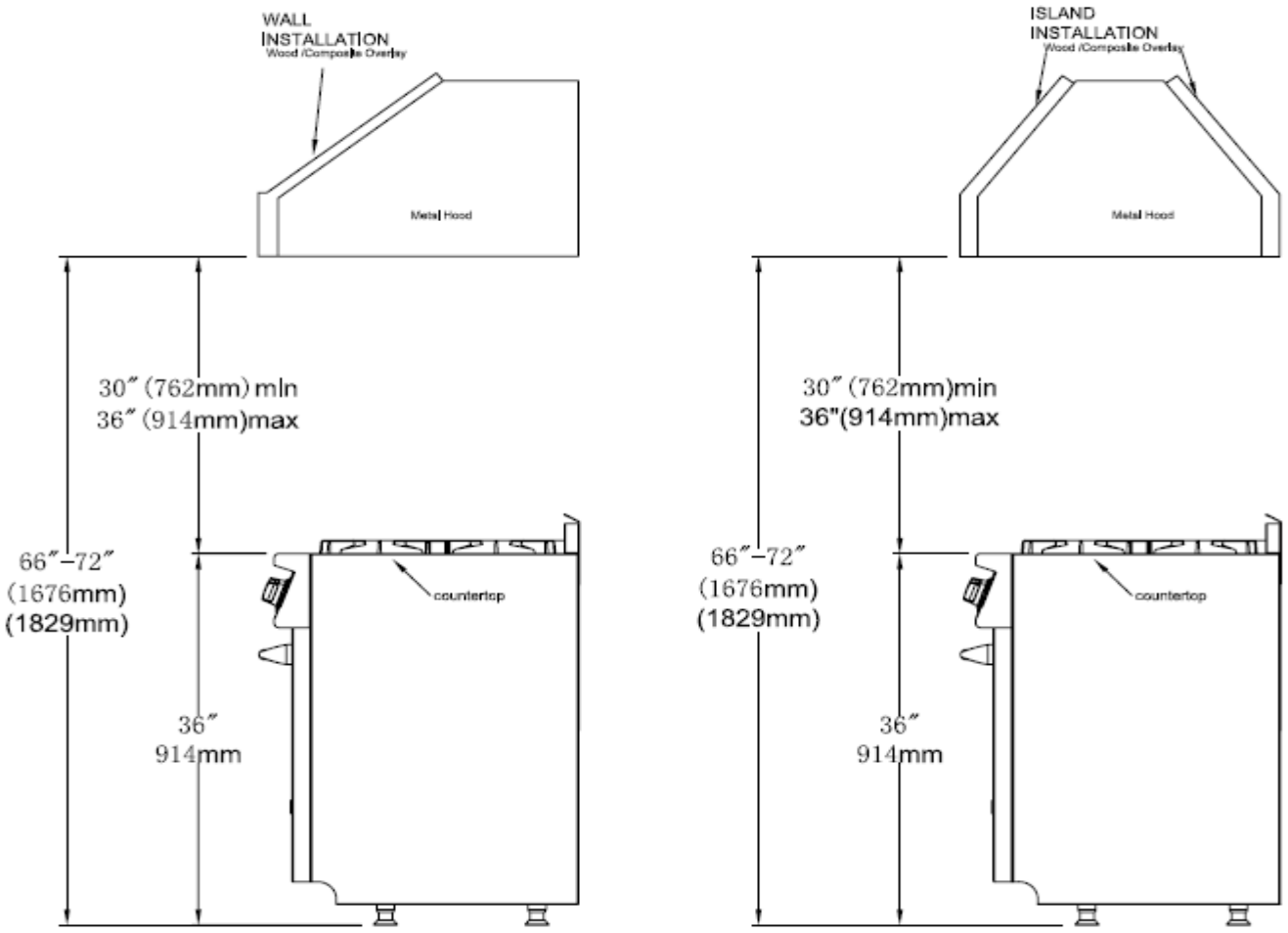

The bottom of the hood should be 30″ min. to 36″ above the counter top. This would typically result in the bottom of the hood being 66″ to 72″ above the floor. These dimensions provide safe and efficient operation of the hood.

After Installation:

Check ignition of cooktop burners.

Check the air shutter adjustment – sharp blue flame, with no yellow tipping or lifting flames.

Check ignition of oven burner.

Visually check tubular burner (oven burner) re-ignition to be sure both rows of burner ports are relighting each time.

Check for gas leaks at all gas connections (using a gas detector, never a flame).

Check oven bake and convection bake function.

COOKTOP OPERATION

Surface Burner Ignition



Push to release gas.



Turn to Ignite and 'Hi' position.





Adjust to appropriate flame height.

To light the surface burners, push and turn the appropriate control knob counter clockwise to a "Hi" position. You will hear a clicking noise – the sound of the electric spark igniting the burner.

Once burner ignition has been achieved, turn the burner control knob to adjust the flame size. If the knob stays at "Hi", it will continue to click.

NOTE: When one burner is turned to the "Hi" position, all the burners will spark. Do not attempt to disassemble or clean around any burner while another burner is on. Do not touch any burner cap, burner base, or igniter while the igniters are sparking.

Heat Settings:

Hi	Ignites the burners.
Simmer	Melting small quantities, steaming rice, warming food, melting chocolate or butter.
Low	Melting large quantities.
Low-Medium	Low-temperature frying, simmering large quantities, heating milk, cream sauces, gravies.
Medium	Sautéing and browning, braising, pan-frying, maintaining slow boil on large quantities.
Medium – Hi	High-temperature frying, pan boiling, maintaining slow boil on large quantities.
Hi	Boiling liquid quickly, deep frying.

Simmer and Boil

- A smaller flame will give the best simmer results. Small flames offer precise cooking performance for delicate foods, keeping food warm, melting chocolate or butter, and for cooking that need to cook over low heat for a long time.
- The highest (larger) flame settings provide the maximum heat that is available on your range. This setting should be used for heavy cooking loads such as water boiling and pasta cooking.

Flame Size

- When you select the flame size, watch the flame when you turn the knob.
- Any flame larger than the bottom of the cookware is wasted.
- The flame should be steady and blue in color. Foreign material in the gas line may cause an orange flame during initial operation.



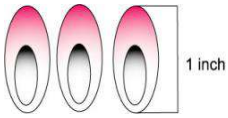

Approximate 1 1/2“ Flame Height

Power Failure

- If the gas does not ignite within four seconds, turn off the valve and allow at least five minutes for any gas to dissipate. Repeat the lighting procedure.
- If the power fails, the surface burners can be lighted manually. Hold a lighted match near a burner and turn knob counterclockwise to “HI”. After burner lights, turn knob to setting.

Cooktop

- To prevent the cooktop from discoloring or staining, clean cooktop after each use, and wipe up acidic or sugary spills as soon as the cooktop has cooled.
- The sealed burners of your range are not secured to the cooktop and are designed to be removed. Boil overs or spills will not seep underneath the cooktop. The burners should be cleaned after each use.

Cooktop Operation

Oven Vent

- Do not block the ducts at the rear of the range when cooking in the oven. It is important that the flow of hot air from the oven and fresh air into the oven burner never be interrupted. Avoid touching the vent opening or nearby surfaces during oven or broiler operation – they may become hot.

WARNING

FOOD SAFETY

According to the United States Department of Agriculture: DO NOT hold foods at temperatures between 40°F to 140°F more than 2 hours. Cooking raw foods below 275°F is not recommended.

WARNING

Never use this appliance as a space heater to heat or warm the room, Doing so many result in carbon monoxide poisoning and overheating of the oven. Never use this appliance as a storage space and storage cabinet areas

WARNING

Never use this appliance doors or drawers such as stepping.
Leaning or setting on the doors or drawers, may result in hazards and injuries

Burner Grates

1. The grates must be properly positioned before cooking. Improper installation of the grates may result in scratching of the cooktop and / or poor combustion.
2. Do not operate the burners without a pan or utensil on the grates





Oven Operation



DO NOT cover any slots, holes or passages in the oven. DO NOT cover the oven racks with materials such as aluminum foil. Doing so blocks air flow through the oven and affect cooking performance. Aluminum foil lining may also trap heat, causing a fire hazard. Do not use Aluminum Foil on any porcelain surface. Doing so will damage the porcelain



BEFORE USING THE APPLIANCE – it is recommended that the oven be turned on to burn off the manufacturing oils. Set the oven control knob to 450˚F (230˚C) and let the oven run for 20 to 30 minutes. Turn on the range hood to remove odors or smoke away from the kitchen. Turn off appliances when done. Please note that the cooling fan shall continue to run until such time that the oven has cooled down. This is normal oven operation.



DO NOT use aluminum foil on the porcelain surface area of the oven. DOING SO WILL DAMAGE THE PORCELAIN.

Oven Operation

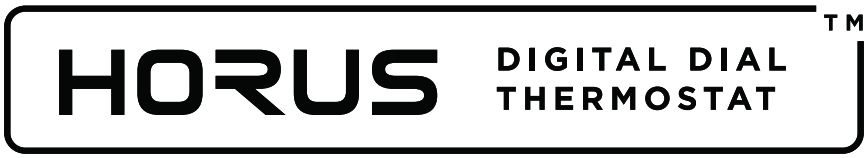

Oven Thermostat Operation

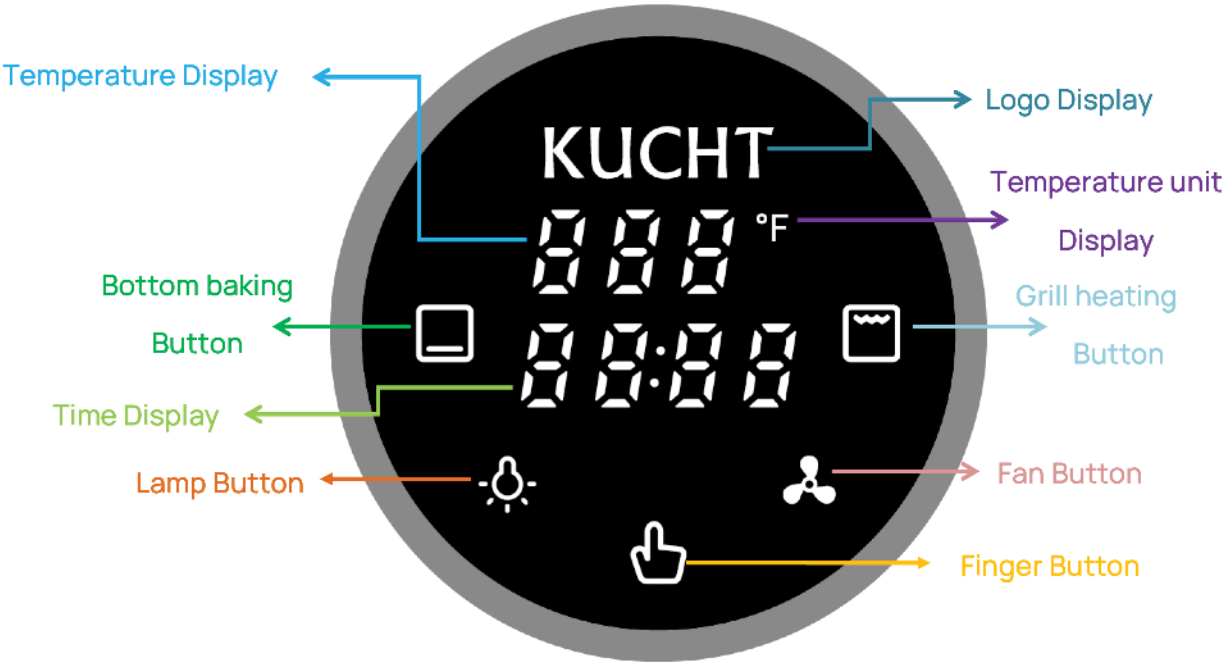

FUNCTION INSTRUCTIONS

1. Power On

After the product is powered on, there will be a "power on sound". The screen will display the product Logo and clock 12:00 (blinking), and the Finger Button will appear white. Next, enter the Clock Setting in the Standby State.
As long as the product is powered on, the Logo will always light up.

2. Stand-by State

ln normal Stand-by State, only the product Logo, clock, and Finger Button are displayed on the screen.
ln the Stand-by State, when the clock is not set, click the Finger Button to enter the Start up State. **The clock can be set only in Stand-by State.**

2.1. Clock Setting

After entering the Clock Setting, the clock blinks, indicating that the current clock can be adjusted, and the clock can be adjusted by turning the knob. The clock is set to 12 hours.

After adjusting the clock, click the Finger Button or do not operate for 5 seconds to exit the Clock Setting and return to the normal display in the Standby State.

3. Start up State

After entering the Start up State, all buttons light up and the product makes a "power-on tone".

ln the Start up State, you can set the heating mode and temperature. If you do not operate the product for 10 minutes (when the fan is not started) or hold down the Finger Button for 2 seconds, the product enters the Standby State.

3.1. Heating Mode Setting

This product provides two heating modes, namely bottom element heating and grill heating.

Click the Bottom baking Button to set the heating mode to bottom element heating. At this time, the Bottom baking Button remains fully lit, and the Grill heating Button turns dark; Click Grill heating Button to set the heating mode to grill heating. At this time, Grill heating Button becomes fully lit and Bottom baking Button darkens.

The user can select one of the heating modes for heating. After selecting any heating mode in the above way, click the Finger Button to enter the Temperature Setting. Users can also not select any heating mode, click the Finger Button can directly enter the Temperature Settings.

3.2. Temperature Setting

For either heating method, the temperature range can be set from 190°F to 500°F.

Slowly turn the knob to a temperature adjustable range of 5°F; Quickly turn the knob for a temperature adjustable range of 10°F.

After adjusting the temperature, click the Finger Button to enter the Heating State.

4. Heating State

After entering the heating state, the time in the middle of the screen begins to accumulate. The maximum heating time is 2h, and the Finger Button in bright red. If the user selects the overheating mode in the Start up State, the selected heating mode is fully bright, and the unselected heating mode buttons are dimmed. If the user has not selected the heating mode in the Start up State, after entering the Heating State, the Bottom baking Button is fully bright by default, and Grill heating Button is displayed in half.

After entering the Heating State, you can also modify the heating mode and default temperature. Click the desired heating mode button to switch the heating mode directly, and turn the knob to directly adjust the temperature. When adjusting the temperature, the temperature display will flash. After the temperature is adjusted, click the Finger Button or leave it for 5 seconds without operation to exit the Temperature Setting.

ln the Heating State, press the Finger Button for 2 seconds to enter the Start up State or can end the heating.

lf the heating time reaches a maximum of 2 hours, the product will automatically enter the End State.

5. End State

After entering the End State, the Finger Button is fully white, and the screen displays "End" on the left.

In the End State, click the Finger Button to enter the Start up State.

ln the End State, long press the Finger Button for 2s to return to the Standby State.

6. Lamp Setting

ln addition to the Standby state and Fault Conditions, the lamp can be turned on or off by the Lamp Button in other states. When the lamp is turned on, the lamp button is fully on; when the lamp is turned off, the lamp button is dimmed.

With the door open, the lamp stays on. After closing the door, the lamp will be delayed for 2 minutes to turn off. Afterwards, when the oven door is closed, click the Lamp Button to turn on the lamp, and then without 10 minutes operation or click the Lamp Button to turn off the lamp.

After entering Standby State, the lamp will be turned off.

After entering the Heating State and End State, the lamp will automatically light up for 2 minutes.

Hold down lamp button for 3 seconds, the long strip lamp on, hold down lamp button 3 second again,the long strip lamp off.

7. Fan Setting

You can use the Fan Button to enable or disable the fan in any state except the Standby State and Fault Conditions.

After the Fan Button is started, the Fan Button is all on. After the fan is turned off, the Fan Button is dimmed.

Note: After entering the Heating State, the fan will automatically turn on and the Fan Button will light up. When the oven reaches the set temperature, the Fan Button can control the fan to turn on or off again.

8. Door Detection

ln the Heating State, after the oven door is opened, the heating time continues to be timed, and the lamp will always be on.

After closing the oven door, the lamp will be delayed for 2 minutes.

9. Fault Conditions

The oven malfunctions in the following cases. After a fault occurs, the oven will sound 20 fault sounds, and the corresponding fault code will be displayed in the center of the screen.

ln case of some failures, click the Finger Button to return to Start up State. In the case of some failures, click the Finger Button or turn the knob to return to the original state. In the case of other faults, after troubleshooting, the product needs to be powered on again to resume normal operation.

See next page for troubleshooting error codes.

FAULT CONDITION	ERROR CODE	FAULT REASON	WETHER OVEN CAN RESTORE TO START UP STATE
NTC open circuit	EOl	Open circuit or open NTC is detected	X
NTC short circuit	E02	NTC short circuit is detected	X
Abnormal communication	Ell	Abnormal communication is detected	X
Abnormal crystal oscillator	E14	Abnormal crystal oscillator detected	Restore to original state
Abnormal high temperature	E15	After heating, it is detected that oven temperature exceeds 600°F for 20s	

Care and Cleaning

Cooktop

- To avoid electrical shock or burns, turn off all controls and ensure the cooktop is cool before cleaning.
- Before cleaning the cooktop, ensure that all burners are turned off and that all components are cool enough to safely touch.
- Do not use harsh or abrasive cleaning agents, waxes, polishes, or commercial cooktop cleaners to clean the cooktop.
- Use only a sponge, soft cloth, fibrous or plastic brush, and nylon pad for cleaning.
- Always dry components completely before using the cooktop.

Control Panel, Door Handle, Control Housing

- Clean the control panel, door handle and control housing with a solution of mild detergent and warm water.
- Do not use abrasive cleaners or scrubbers; they will permanently damage the finish.
- Dry the components with a soft, lint-free cloth.

Oven Window

- Clean all glass surfaces with a solution of mild detergent and hot water. Use a mild glass cleaner to remove fingerprint or smears.
- Dry completely with a soft, lint-free cloth.

Porcelain Surfaces

- Clean oven interior and inner door liners with a solution of mild detergent and hot water. Rinse and dry with a soft cloth. Do not use abrasives or commercial oven cleaners.

Stainless Steel Surfaces

- Do not use any cleaning product containing chlorine bleach.
- Do not use a steel-wool pad; it will scratch the surface.
- Use a hot, damp cloth with a mild detergent. Use a clean, hot, damp cloth to remove soap. Dry with a dry, clean cloth.
- Do not use aluminum foil on the stainless steel surfaces. Doing so will cause damages that affect the life of stainless steel.

Care and Cleaning

Metal Finishes

- Wash with soap and water, glass cleaner, or mild liquid sprays.

Plastic Finishes

- When control panel trim and end caps are cool, clean with soap and water, rinse and dry.
- Use a glass cleaner and soft cloth.

Oven Racks

- Clean oven racks with solution of detergent and hot water. To clean heavy soil, use a scouring pad such as steel wool with plenty of water.

Oven Frame

- Clean with hot water, soap-filled steel-wool pads or cleaners. Rinse well with clean water and dry.

Oven Gasket

- Do not clean the gasket. The fiberglass material of the oven door gasket cannot withstand abrasion.
- It is necessary for the gasket to remain intact.

Replacing the Oven Light

- Turn off the power at the main power supply.
- Remove the lens cover from the housing by pulling straight out.
- To prevent electrical shock or personal injury, make sure the oven and light bulb are cool and power to the oven has been turned off before replacing the light bulb. Make sure the lens cover is in place when using the oven.

Outer Oven Door

- Use soap and water to thoroughly clean the top, sides and front of the oven door. Rinse well. You may also use a glass cleaner to clean the glass on the outside of the door.
- Do not use oven cleaners, cleansing powders of harsh abrasives on the outside of the door.

Inner Oven Door

- Do not allow excess water to run into any holes or slots in the door. Any soap left on the liner causes additional stains when the oven is heated.
- Before you call for service, please review the potential problem / possible causes and remedies shown in the table below.

Troubleshooting

Before you call for service, please review the potential problem / possible causes and remedies shown in the table below.

Nothing works	Oven is not connected to the electrical power.	Have oven connected to a properly sized electrical power supply by a qualified electrician.
	Power supply is not energized.	Have an electrician check the power supply, including the house circuit breaker, wiring and fuses
Top burners do not light or do not burn evenly	Plug on range is not completely inserted in the electrical outlet.	Make sure the unit is properly connected to the power supply
	Burner holes on the side of the burner may be clogged.	Remove the burner heads and clean them. Check the electrode area for burned-on food or grease.
Burner flames very large and yellow.	Burner bezel ports are clogged.	Clean burner bezel ring ports with straightened paper clip, needle, or wire.
	Burner ports or burner caps are not positioned properly.	Remove and carefully re-install burner bezel and caps.
	Cooktop is being operated with the wrong type of gas.	Ensure that the type of cooktop matches the natural gas supply.
	Regulator is not installed, is faulty, or is set for the wrong type of gas.	Check installation, replace regulator, or set regulator for proper gas.
Sparking but no flame ignition.	Gas shut-off valve is in the 'OFF' position.	Turn shut-off valve to the 'ON' position.
Igniters spark continuously after flame ignition.	Power supply polarity is reversed.	Have polarity corrected.
	Igniters are wet or dirty.	Dry or clean igniters.
Burner flame goes out at low setting.	Low gas supply pressure.	Contact gas company.
	Air intake holes around knobs are obstructed.	Remove obstruction.
Oven will not heat	Oven settings are not corrected	Follow mode selection and clock settings as specified in Oven Operation section of the manual.
Foods over-cooked or under-cooked	Incorrect cooking time or temperature.	Adjust time, temperature, or rack position.
'Cracking' or 'Popping' sound.	This is the sound of metal heating and cooling.	This is normal.

Warranty and Product Registration

Kucht is not responsible for incidental or consequential damages.Under no circumstances will Kucht's liability exceed the cost that you paid for the product. Some provinces/states do not allow the exclusion or limitation of incidental or consequential damages,so the above limitation or exclusion may not apply to you.

This warranty gives you specific legal rights,and you may also have other rights that vary from state to state.

Remember to register your product at www.kucht.com



WARRANTY

4-Year Warranty for Parts and Labor*
The main objective of KUCHT is to meet the needs and expectations of our customers. For this reason, all our products are subjected to rigorous security and quality controls to be above the North American safety standards.

KUCHT Warranty covers defects in Parts and Labor for functional parts that are the result of normal usage for a period of time of 4 Years for Parts and Labor* from date of purchase. Functional parts are those components parts that are critical to the performance of the product's essential function. Nonfunctional parts are those that are not critical like knobs, handles, or cosmetic parts. KUCHT will repair or replace the unit or any parts, therefore, as required, subject to these terms and conditions.

Unlimited lifetime online support
In addition, we give full unlimited lifetime support. This means that if our customers come across any problem after the warranty has expired, a qualified Kucht member will assist you or your trusted technician using video chat in any repair process. You will also have access to repair videos, tutorials, manuals, and any extra help that is available.

General Conditions:
a. Warranty does not cover failure as a result of misuse, abuse, rust or corrosion, spilled liquids or foreign objects found inside the unit; repair of damage caused by accident, theft, fire, flood, external causes such as, but not limited to, blow fuses, inadequate electrical power, water and gas lines beyond the equipment, or any use of the product not authorized by the manufacturer.
b. The maximum liability of the warranty for product replacement or repair shall not exceed the original purchase price of the product.
c. KUCHT reserves the right to repair or replace the covered product with a comparable feature model of like kind.
d. Warranty does not cover deterioration of the appearance of the product, any cosmetic part such as paint, porcelain, glass, dents, scratches, chips, rust or peeling.
e. Any damage resulting from unauthorized replacement parts, improper service, or modifications made to the covered product are not covered.
f. KUCHT is released from all liability due to indirect, consequential, or incidental damages.
g. This warranty does not cover any damage to the product due to lightning, over-voltage, under-voltage, accident, misuse, abuse, negligence, or any damage caused by the use of the product by the purchaser or others. This warranty does not cover non-EWP products that have been exposed to wet or corrosive environments. This warranty does not cover stainless steel surfaces that have not been properly maintained.
h. Kucht Products are certified for use according to U.S. and Canada standards. The warranty coverage is limited to U.S. and Canada only. Kucht will not provide technical service or support in other countries. Replacement parts will only be shipped to continental U.S. and Canada addresses.

Limit of Liability:
Our Liability is limited to the original price of the covered equipment. Additional losses, damages, or injuries caused by product malfunction or defects will not be covered.

To Arrange for Service:
Prior approval from Customer Service is required to start the service. To initiate a service claim please Submit a Ticket or contact KUCHT for assistance on how to initiate a service claim. Please have your original bill of sale and Serial Number of the unit available so our customer service representative is able to quickly arrange for service.

–

(*): Valid for every appliance bought after September 1st, 2020 in the U.S. – Not valid for accessories, parts, wine coolers, and outdoor kitchen appliances (Pizza Ovens & Cart). All the appliances acquired before September 1st, 2020, and Wine Coolers, outdoor kitchen appliances (Pizza Ovens & Cart), and products sold or located in Canada are covered with a 2-year warranty for parts and labor.

WARRANTY EXCLUSIONS

The Kucht LLC Limited Warranty covers residential installations only and is non-transferable to any other party.
Warranty is void when the product is installed in common areas where more than a single party has rightful access to its use or in locations considered beyond normal residential use.
Warranty does not apply to products installed or used in any commercial or non-residential application. Examples of excluded applications include, but are not limited to daycare centers, schools, bed and breakfast centers, churches, private clubs, fire stations, club houses, common areas in multi-family dwellings, restaurants, bakeries, hotels, nursing homes, food service locations and institutional food service locations or any similar institutional or commercial activity.

About Commercial, Industrial, or Institutional Use

Our products are specifically certified for residential use due to the unique challenges posed by commercial settings. The rigorous demands of commercial activities, particularly in ovens and gas ranges, subject the components to accelerated material fatigue, primarily driven by intense heat. The continuous and rapid cooking cycles in commercial environments impede proper cooling of the internals, leading to expedited wear of the unit.

While our units may share similarities or even surpass components found in commercial counterparts, they are designed and optimized for residential environments with distinct heat dissipation characteristics. Commercial kitchens are notably hot because a significant portion of the heat is transferred to the unit surface and the surrounding space. This is a feature we intentionally avoid for home use to ensure the safety and comfort of your family.

It's important to note that commercial equipment typically requires routine inspections and servicing for optimal performance and safety. Therefore, for commercial applications, we strongly recommend using products that are explicitly certified for such purposes. Using Kucht products in commercial, industrial, or institutional settings will result in the immediate voiding of the warranty, releasing Kucht from any responsibility for the outcomes. Your safety and satisfaction are our top priorities, and we encourage adherence to recommended usage guidelines.

RETURN POLICY

Kucht will accept return requests for purchases within the
first 60 days after delivery. Shipping discrepancies or products that arrive damaged must be reported to Kucht Customer Support within 5 business days of delivery in order to be eligible for a full refund.

Once a return request is approved, Kucht will send a Return Merchandise Authorization (RMA). From this time, the customer will have 15 calendar days to return the item to Kucht.

All merchandise returned to Kucht must be in original packaging with all original items (e.g., manuals, remotes, cables, etc.) that came in the box. Returns with missing or damaged items will result in a partial refund.

Products and or Part(s) must be returned in new condition, including: all components, manuals, registration cards, and original undamaged packaging.

After we receive and inspect the item(s), the refund will be processed, minus the original shipping cost.

Kucht won´t refund the original shipping cost in any case. The return shipping cost might be covered by Kucht depending on the situation, in which case, Kucht will send a Bill Of Lading and handle the shipping arrangements. There will not be refunds or compensations related to the shipping and handling of the products under any circumstances.

Returns without an RMA number will not be accepted and a credit will not be issued.

Additional shipping charges apply with shipments outside the 48 contiguous United States, expedited shipping and oversized items. These additional shipping charges, such as taxes, custom duties and fees are the responsibility of the purchaser.

For more detailed information about our Return Policy, please visit the following link:
https://kucht.com/online/warranty/return-policy/

KUCHT
Professional

WE TRANSFORM A SIMPLE KITCHEN INTO A PRO ONE.
THIS IS WHY WE CARE ABOUT MAKING VERY HIGH PERFORMANCE
RANGES AND HOODS, TO MAKE YOU FEEL LIKE A PRO AND STYLISH COOKER.

DESIGN: LONDON DC - WWW.LONDON-DC.COM

FOR MORE DETAILS AND INFORMATION, PLEASE VISIT OUR WEBSITE **WWW.KUCHT.COM**