gorenje

EN

USER MANUAL

WASHING MACHINE

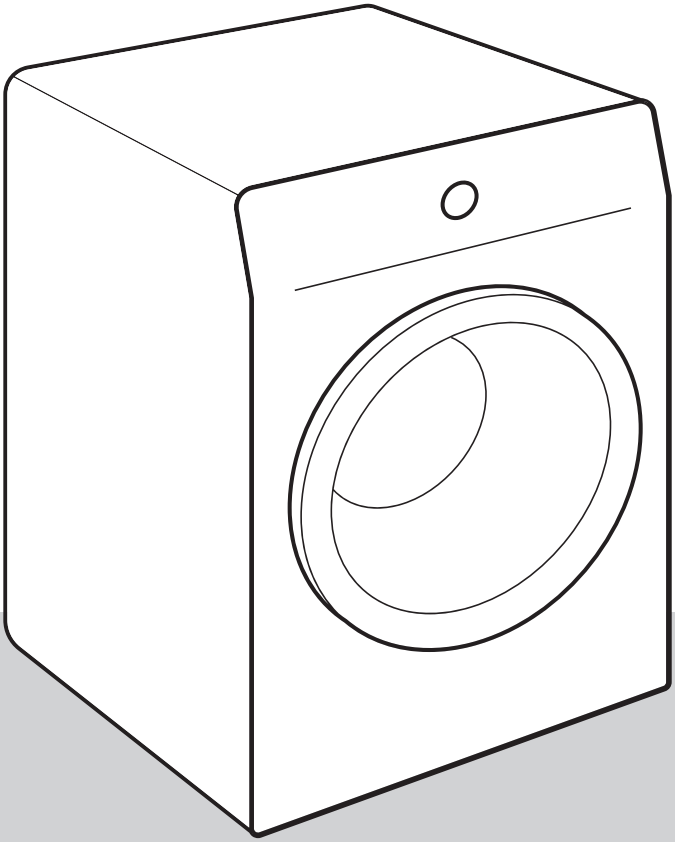

Life is complicated today. Let's make laundry care simple! Your new washing machine uses innovative technology and latest achievements in laundry care to help you simplify your daily household chores.
The latest technology used in our washing machine ensures the gentlest care for each garment with minimum creasing. At the same time, your washing machine will be easy on the environment, owing to its highly efficient use of power, water and detergent.

This washing machine is intended solely for household use. Please do not use it for any laundry labelled as not suitable for machine washing.

The following symbols are used throughout the manual and they have the following meanings:

INFORMATION!
Information, advice, tip, or recommendation

WARNING!
Warning – general danger

ELECTRIC SHOCK!
Warning – danger of electric shock

HOT SURFACE!
Warning – danger of hot surface

DANGER OF FIRE!
Warning – danger of fire

It is important that you carefully read the instructions.

Contents

1. SAFETY PRECAUTIONS 5
1.1 Use in accordance with regulations 5
1.2 Installation and connection 6
1.3 Proper use 8
1.4 Child safety 8
1.5 Danger of hot surface 9

2. ENVIRONMENTAL PROTECTION 10
2.1 Disposal of packaging 10
2.2 General advice 10
2.3 Disposal of the end-of-life appliance 10

3. WASHING MACHINE DESCRIPTION 11
3.1 Washing machine overview 11
3.2 Dimensions of the washing machine 12
3.3 Opening and closing the washing machine door 12
3.4 Technical data 13
3.5 Control unit 15

4. INSTALLATION AND CONNECTION 19
4.1 Before the first installation and during subsequent transport 19
4.2 Positioning the washing machine 22
4.3 Connecting the washing machine to the water supply network 26
4.4 Connecting the washing machine to the electricity supply 29

5. BEFORE USING THE APPLIANCE FOR THE FIRST TIME 30
5.1 Before switching on the appliance for the first time 30
5.2 First connection to a Wi-Fi network 31

6. WASHING PROCESS, STEP BY STEP (1–7) 34
6.1 Sort the laundry 34
6.2 Put the laundry in the washing machine and add the detergent and/or softener 36
6.3 Switch on the washing machine 40
6.4 Choose the washing program 41
6.5 Select the additional functions 48
6.6 Start the washing programme 56
6.7 Complete the washing cycle 58

7. APPLIANCE SETTINGS AND ADJUSTMENTS 59
7.1 Autodose (ADS) 59
7.2 Saving programe and selected functions 62
7.3 Additional appliance settings 63
7.4 User settings menu 64

8. CLEANING AND MAINTENANCE 66
8.1 Cleaning the washing machine exterior 66
8.2 Cleaning the dispenser tray 67
8.3 Cleaning the water supply hose, detergent dispenser housing, and rubber door gasket . 68
8.4 Cleaning the pump filter 69

9. TROUBLESHOOTING AND SERVICING 70
9.1 What to do in case of problems? 70
9.2 Display Message Table 71

9.3 Service 76
9.4 Warranty 77
9.5 Spare parts 77

10. RECOMMENDATIONS FOR WASHING AND ECONOMIC USE 78
10.1 Tips for optimal laundry results 78
10.2 Prevention and removal of limescale 80
10.3 Stain removal tips 81

11. CONSUMPTION VALUES 83

1. SAFETY PRECAUTIONS

Carefully read the instructions for use before using the washing machine.
Please, do not use the washing machine without reading and understanding these instructions or use first.
These instructions for use of a washing machine are supplied with different types or models of washing machines. Therefore, they may include descriptions of settings or equipment that are not available in your washing machine.
Instructions for use are available on our website at www.gorenje.com.

1.1 Use in accordance with regulations

Failure to observe the instructions for use or inappropriate use of the washing machine may result in damage to the laundry or the appliance, or injury to the user. Keep the instruction manual handy, near the washing machine.

This appliance is intended to be used in household and similar applications, such as:

- staff kitchen areas in shops, offices and other working environments;
- farm houses;
- by clients in hotels, motels and other residential type environments;
- bed and breakfast type environments.

This appliance must not be used in:

- areas for communal use in blocks of flats,
- in open spaces or outdoors.

This appliance is not intended for use by persons (including children) with reduced physical, sensory or mental capabilities, or lack of experience and knowledge, unless they have been given supervision or instruction concerning use of the appliance by a person responsible for their safety.

1.2 Installation and connection

⚠ **WARNING!**
The washing machine is supplied with a built-in power cord, which must not be replaced.

⚠ **ELECTRIC SHOCK!**
To avoid danger, a **damaged power cord** may only be replaced by the manufacturer, a service technician, or an authorized person.

⚠ **WARNING!**
Do not connect the washing machine to power mains using an external switching device such as a programme timer, or connect it to power mains that is regularly switched on and off by the power supply provider.

Follow the instructions for correct installation of the Gorenje washing machine and connection to the water and power mains (see chapter *INSTALLATION AND CONNECTION*).

Connection to water and power supply has to be executed by an adequately trained technician or expert.

Any repair and maintenance pertaining to safety or performance should be done by trained experts.

Do not install the washing machine in a room where the temperature can drop to below 5°C, as washing machine parts may be damaged in case of water freezing.

The ventilation openings in the base of washing machine must not be obstructed by a carpet.

To connect the washing machine to water supply, make sure to use the supplied water supply hose and gaskets. Water pressure must be between 0,05 and 1 MPa (0,5–10 bar).

Always use a new water supply hose to connect the washing machine to water supply; do not reuse an old water supply hose.

The end of the water discharge hose should reach into a water drain line.

Before the start of the washing cycle, press the door on the indicated spot until it locks into place. The door cannot be opened during washing machine operation.

We recommend that, before the first wash, you remove any impurities from the drum by using the *Cotton white 90 °C* program (see chapter *Set of washing programs*).

After washing is completed, close the water tap and unplug the appliance from the wall socket (disconnect it from the mains power supply).

1.3 Proper use

Only use the washing machine for washing laundry, as described in the instruction manual. The machine is not intended for dry cleaning.

No silver ions are released during the washing programme.

Only use agents for machine washing and care of laundry. We shall not be responsible for any damages or discolouration of gaskets and plastic parts resulting from incorrect use of bleaching or colouring agents.

When descaling, only use descaling agents with added anti-corrosion protection. (Only use non-corrosive descaling agents.) Follow the manufacturer's instructions. Finish the descaling process with several rinse cycles or by running the *Ultra clean* (Self-cleaning programme) in order to remove any residual acid (e.g. vinegar etc.).

⚠ **DANGER OF FIRE!**
Do not use detergents that contain solvents as this could lead to release of poisonous gases, damage to the washing machine, and risk of fire and explosion.

1.4 Child safety

⚠ **WARNING!**
Children of less than 3 years should be kept away unless continuously supervised.

Children should be supervised to ensure that they do not play with the appliance.

Keep the detergent and conditioner out of reach of children.

Activate the child lock. See chapter *APPLIANCE SETTINGS AND ADJUSTMENTS / Additional appliance settings / Child lock*.

Before closing the washing machine door and running the programme, make sure there is nothing except laundry in the drum (e.g. if a child climbed into the washing machine drum and closed the door from the inside).

The washing machine is made in compliance with all relevant safety standards.

This appliance can be used by children aged from 8 years and above and persons with reduced physical, sensory or mental capabilities or lack of experience and knowledge if they have been given supervision or instruction concerning use of the appliance in a safe way and understand the hazards involved.

Children shall not play with the appliance.

Cleaning and user maintenance, shall not be made by children without supervision.

1.5 Danger of hot surface

⚠ **HOT SURFACE!**
At higher washing temperatures, the door glass will heat up. Be careful to avoid burns. Make sure children do not play near the door glass.

2. ENVIRONMENTAL PROTECTION

2.1 Disposal of packaging

Once you have unpacked the appliance, we advise you to recycle all packaging materials. Dispose of them in the appropriate containers or take them to a local collection center.

2.2 General advice

To ensure that your appliance works as well and for as long as possible, we recommend that you:

- follow the recommended rated load for each washing programme (see chapter *Set of washing programs*),
- use detergent and fabric softener sparingly,
- clean the appliance regularly (see chapter *CLEANING AND MAINTENANCE*) and use the *Ultra clean* self-cleaning program regularly (see chapter *TROUBLESHOOTING AND SERVICING / Display Message Table/ CLn*).
- select programs with longer washing times and lower temperatures.

This will help protect the environment and save natural resources.

2.3 Disposal of the end-of-life appliance

DISPOSAL

Packaging is made of environmentally friendly materials that can be recycled, disposed of, or destroyed without any hazard to the environment. To this end, packaging materials are labelled appropriately.

The symbol on the product or its packaging indicates that the product should not be treated as normal household waste. Take the product to an authorized collection centre for waste electric and electronic equipment processing.

When **disposing** of the appliance at the end of its useful life, remove all power cords, and destroy the door latch and switch to prevent the door from locking or latching (child safety).

Correct **disposal** of the product will help prevent any negative effects on the environment and health of people, which could occur in case of incorrect product removal. For detailed information on removal and processing of the product, please contact the relevant municipal body in charge of waste management, your waste disposal service, or the store where you bought the product.

3. WASHING MACHINE DESCRIPTION

In this chapter, you will get to know your washing machine, including:
- its appearance,
- its dimensions,
- how to open the washing machine door,
- the location of the technical specifications and other relevant information,
- the layout and functions of the appliance's control panel.

3.1 Washing machine overview

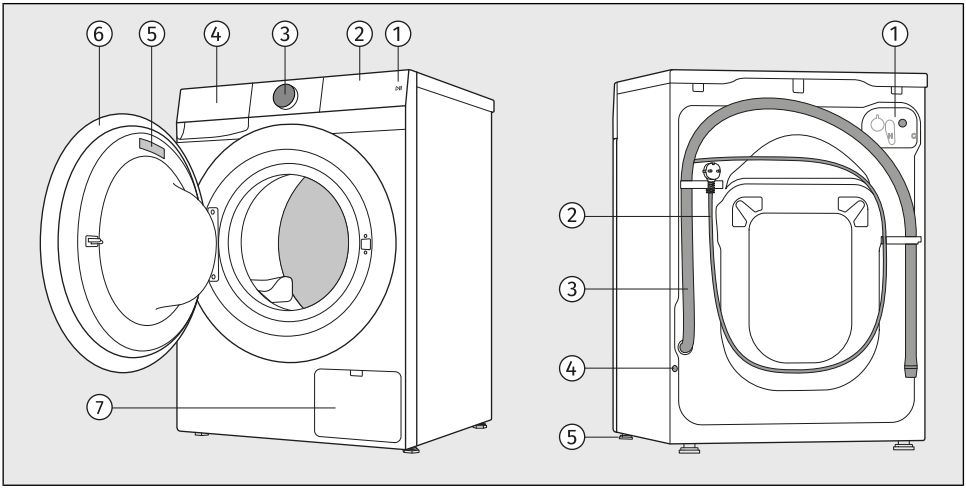

FRONT
1. Start key *Start/Pause*
2. Touch control unit
3. Button for switching the appliance on and off ⏻ *On/Off* and for programme selection (hereinafter referred to as the **selector**)
4. Detergent compartment
5. Rating plate
6. Door
7. Pump filter

BACK
1. Water inlet connector
2. Power cord
3. Water discharge hose
4. Hole for installing the protective plug
5. Adjustable feet

3.2 Dimensions of the washing machine

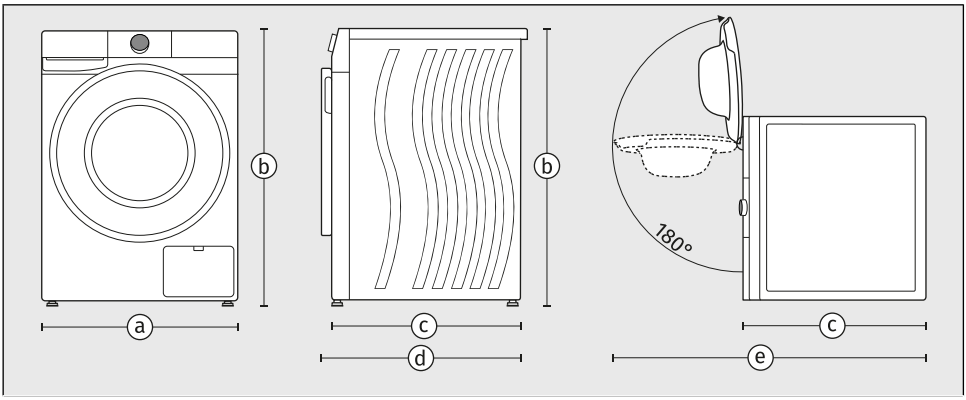

a – width of the appliance: **600 mm**
b – height of the appliance: **850 mm**
c – depth of the appliance's top surface: **540 mm**
d – depth with door closed: **570 mm**
e – depth with door open: **1040 mm**

3.3 Opening and closing the washing machine door

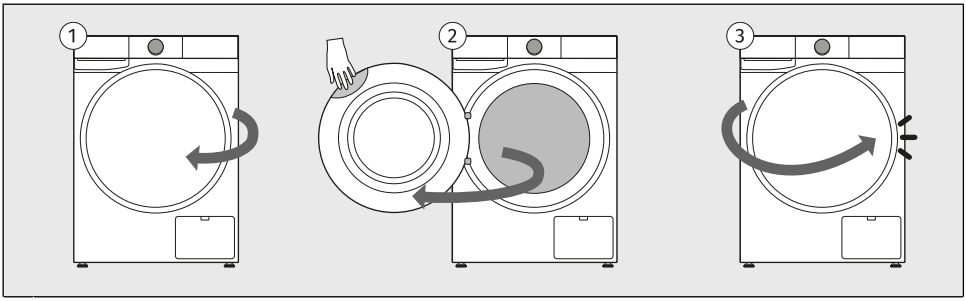

1 The washing machine door is hinged on the left side of the appliance and opens from the right.

2 Place your hand in the recess at the top right corner of the door. (The recess is not visible from the front.)
Pull the door towards you.

3 Close the door in reverse order until it locks into place.

3.4 Technical data

Technical data on the rating plate

Rating plate with basic information about the washing machine is located on the inner side of the washing machine door (see the beginning of this chapter).

The rating plate contains various technical details about your appliance. An important element is the **QR koda**, which provides access to a website where you can find additional information about your appliance, as well as all relevant documentation, such as the user manual, declaration of conformity, product information sheet, consumption data and the energy label, and after-sales support information. You will also need the QR code to connect the appliance for remote control.

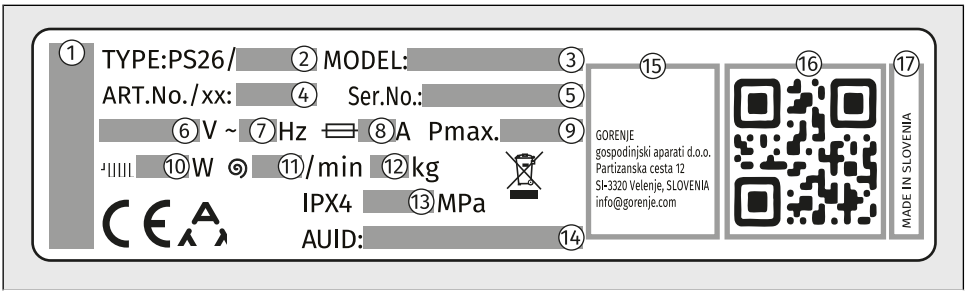

1 – brand of the appliance
2 – type designation of the appliance
3 – model designation of the appliance
4 – the article number/service index (you will need them when contacting customer service)
5 – serial number of the appliance (you will need them when contacting customer service)
6 – rated voltage (V)
7 – frequency (Hz)
8 – maximum current consumption (A)
9 – maximum nominal power (W)
10 – rated water heater power (W)
11 – maximum spinning rate
12 – maximum rated load (kg)
13 – maximum permitted water pressure (MPa)
14 – unique AUID number
15 – manufacturer's address
16 – unique QR code (required when connecting the appliance to a Wi-Fi network)
17 – country of origin

Link to the EU EPREL database

From 1 March 2021, information on energy labelling and ecodesign requirements is available in the EU EPREL product database.

The QR code on the energy label supplied with the appliance contains a web link through which you can find your registered appliance in the EU EPREL database.
Information regarding the performance of the product can also be found in the EU EPREL database, which is accessible via the link https://eprel.ec.europa.eu where you have to enter the model and product number; both are indicated on the rating plate on the appliance. On the website www.theenergylabel.eu you can find more detailed information about the energy label.

Keep the energy label in case it is needed in the future, together with the user manual and other documents supplied with this appliance.

Compliance information

Radio equipment type	
(depending on the model)	HL3215STG HLW3215-TG HLW3215-TG01
Wi-Fi	
Operating frequency range	2.4000 GHz – 2.4835 GHz
Maximum output power	≤10 dBm/MHz (EIRP) (Antenna gain <10 dBi)
Maximum antenna gain	Gain: 0 dBi
Bluetooth	
Operating frequency range	2.400 GHz – 2.4835 GHz
Carrier output	6 dBm (≤ 10 dBm)
Emission type	F1D

Declaration of conformity

The company declares that the device with the function **Connect**Life complies with the essential requirements and other relevant provisions of Directive 2014/53/EU. The detailed Declaration of Conformity can be found at the web address https://auid.connectlife.io on the page of your device among the additional documents.

Low standby mode

If you do not run any program or choose any settings after switching on the washing machine, the display unit will be switched off after 5 minutes and switched to stand-by mode in order to save energy.

The display unit will be reactivated if you rotate the selector or press the *Start/Pause* button. If you do not do anything for 5 minutes after the end of a programme, the display unit will be switched off to save power.

P o = weighted power when off [W]	< 0,5
P l = weighted power when in standby [W]	< 0,5
T l = standby time [min]	5,00

INFORMATION!
Low water temperature, low mains voltage and different washing loads, may affect the washing time; the remaining time displayed is adjusted accordingly during the washing process.

INFORMATION!
Appliance with a wireless connection uses less than 2 W of electric energy in standby mode.

INFORMATION!
When the appliance is in Remote Control mode, the Wi-Fi symbol will remain illuminated even after it enters standby mode.

3.5 Control unit

Control panel overview

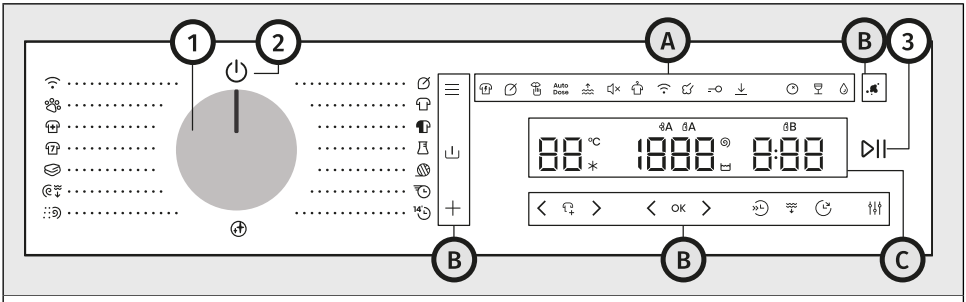

The control unit is located on the upper right part of the appliance.
With it, you will be able to control the operation of the appliance:
- switch the appliance on or off,
- select the washing programme and additional options,
- adjust additional appliance settings,
- start and stop the washing cycle,
- identify possible malfunctions and errors, and perform basic troubleshooting.

1	**Button for switching the appliance on and off and for programme selection (hereinafter referred to as the *selector*)** To select a program, rotate the selector to the desired program. See chapter *WASHING PROCESS, STEP BY STEP (1–7) / Choose the washing program*
2	**Symbol for switching the appliance on and off** To switch on the appliance, rotate the selector to any position. To switch off the appliance, rotate the selector to the position ⏻.
3	**Key *Start/Pause*** (lights up when active) To start, pause, or resume a program, press key *Start/Pause*.
A	**Additional settings symbols**
B	**Function keys**
C	**Display unit**

Additional settings symbols 4-17

The symbols light up when activated. The lighting can be full or partial.

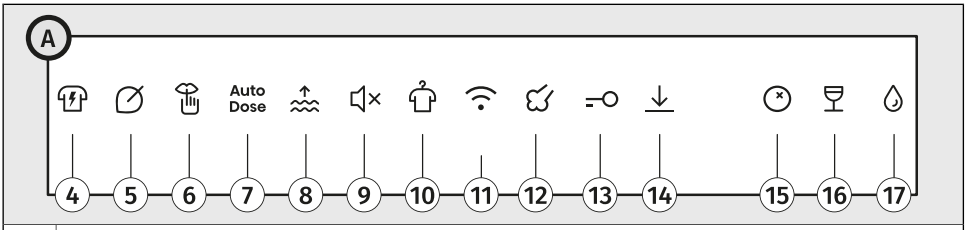

4	**Intensive**
5	**Saving mode**
6	**Silent**
7	**Autodose**
8	**Extra water**
9	**Sound On/Off**
10	**Anticrease**
11	**Remote control**
12	**Steam**
13	**Child lock**
14	**Settings saved**
15	**Tomato** (option to set the type of stain)
16	**Red wine** (option to set the type of stain)
17	**Grease** (option to set the type of stain)

Function keys 18-27

The function keys are finger-press-activated. Some functions can be selected by pressing two keys at the same time.

The 18, 20, 26, 27 keys are always visible. The other keys illuminate when in use.

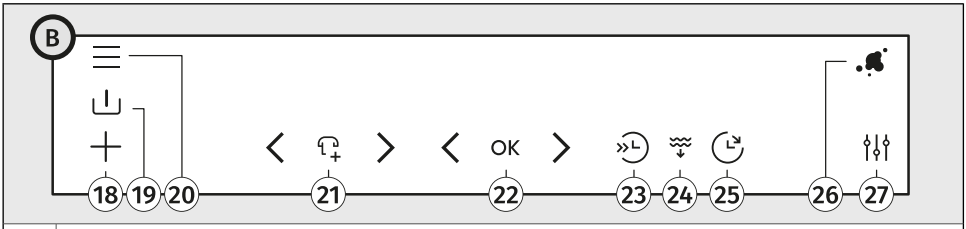

18	**Extras**
19	**Prewash**
20	**Modes**
21	**Add clothes**
22	**Ok**
23	**Fast**
24	**Draining water**
25	**Delay end**
26	**Stains**
27	**Settings**

Display unit (i–iii, 28-31)

The display provides the following information:

- washing temperature and spin speed,
- various settings and animations, such as water hardness, sound level, etc.,
- detergent dosage level and quantity,
- remaining time until the end of the washing cycle,
- information about malfunctions and error messages.

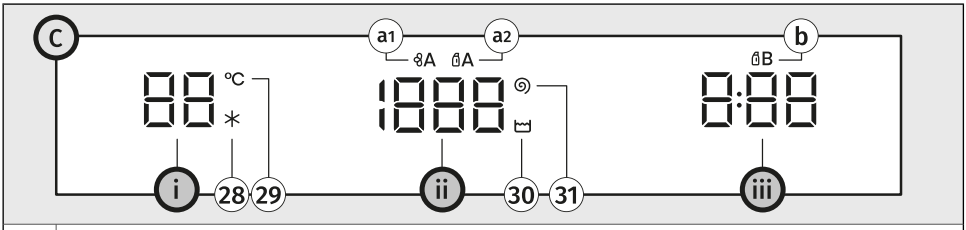

i	**Temperature display**
28	Symbol *Cold* (lights up when active)
29	Symbol *Temperature* (lights up when active)
ii	**Spin speed display**
30	Symbol *Rinse hold* (lights up when active)
31	Symbol *Spin* (lights up when active)
a1	Compartment symbol for *A-liquid softener* (is illuminated when compartment use is activated)
a2	Compartment symbol *for A-liquid detergent* (is illuminated when compartment use is activated)
iii	**Display for total washing time and/or delay end of washing**
b	Compartment symbol *for B-liquid detergent* (is illuminated when compartment use is activated)

4. INSTALLATION AND CONNECTION

This chapter describes how to:
- handle the washing machine before the first installation and during any subsequent transport,
- position the washing machine,
- connect the appliance to the water supply and electrical network.

INFORMATION!
Remove all packaging. When removing the packaging, make sure not to damage the appliance with a sharp object.

4.1 Before the first installation and during subsequent transport

INFORMATION!
Before using the washing machine for the first time, and before removing the transport securing rods, it is essential to install:

- the rear hole plug on the back of the washing machine, and
- the insulation strip at the bottom of the washing machine.

The rear hole plug, and insulation strip can be found in the bag inside the drum of the washing machine.

Install the rear hole plug

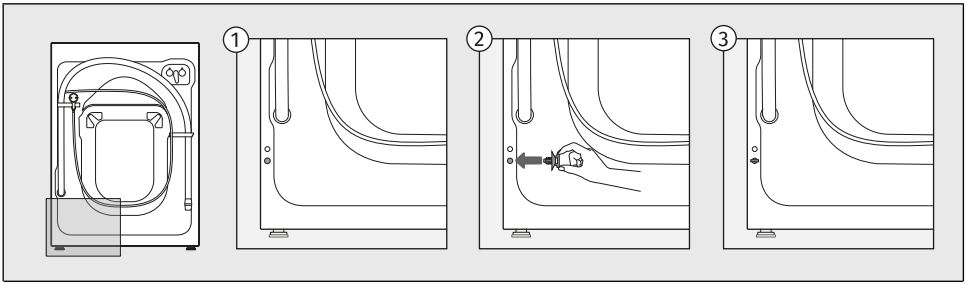

Insert the plug into the hole located at the lower left-hand side of the back of the washing machine.

Install the insulation strip

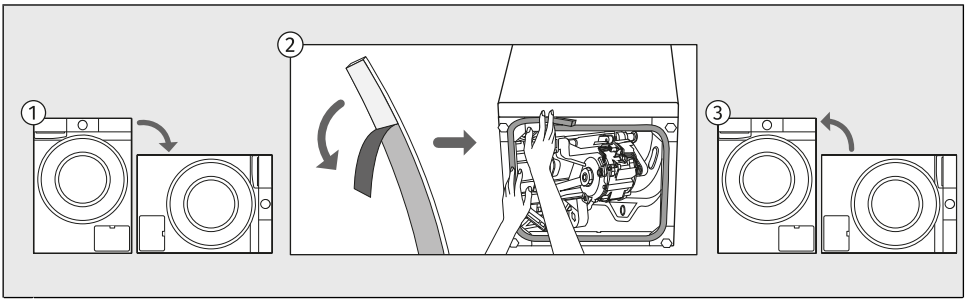

1 Tilt the appliance onto its side and place it on the floor.

2 Peel off the protective film from the insulation strip and attach it around the edge of the lower opening, as shown in the illustration.

3 Return the appliance to its upright position.

Remove the transport securing device

WARNING!
Before the first use of the appliance, transport rods must be removed. A blocked washing machine may be damaged when it is switched on for the first time. Warranty shall be void in cases of such damage!

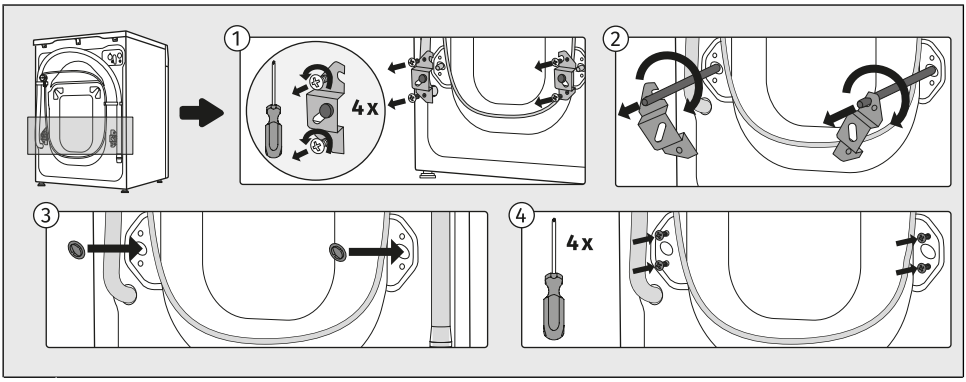

1 Move the hoses and undo the screws on the back of the washing machine.
Remove the two angular pieces.

2 Slide the angular pieces onto the grove in the blocking rod; before doing so, rotate the right angular piece to the opposite side.
Use the angular pieces to rotate the blocking rods by 90°and pull them out.

3,4 Cover the two holes through which the blocking rods were inserted with plastic plugs, and redo the screws that you undid in step 1.
The plastic plugs are supplied in the bag with the washing machine instruction manual.

Moving and transport after installation

Before any subsequent transport, clean and dry the washing machine and the dispenser tray.

INFORMATION!
If you need to move the washing machine, reinstall the angle brackets and insert at least one transport securing rod to prevent damage to the appliance during transport (see the previous chapter). If the angle brackets or transport rods are lost, replacements can be ordered from the manufacturer.

ELECTRIC SHOCK!
The appliance should be installed and connected by a trained technician.

ELECTRIC SHOCK!
Carefully read the instructions for use before connecting the washing machine. Repair or any warranty claim resulting from incorrect connection or use of the washing machine shall not be covered by the warranty.

4.2 Positioning the washing machine

Selecting the room

INFORMATION!
Floor on which the washing machine is placed must have a concrete base. It should be clean and dry; otherwise, the washing machine may slide. Also, clean the bottom surface of adjustable feet.

INFORMATION!
The washing machine must stand level and stable on a solid base.

INFORMATION!
If the washing machine is placed on an elevated stable base, the washing machine has to be additionally secured against tipping.

The room in which you will install the washing machine should be sufficiently ventilated. Do not place the appliance into a place where there is danger of freezing. Frozen water in the appliance may damage the dryer.

Lighting in the room should be sufficient to allow reading the information on the display unit on the control panel.

WARNING!
Do not place the washing machine behind lockable or sliding door, or door with a hinge on the opposite side of the door hinge of the washing machine. Place it in the room in such a way that the washing machine door can be freely opened.

Leveling the appliance

It is important to level your washing machine to prevent it from moving around the room and to prevent excessive vibration or noise when the appliance is operating. This can be achieved by adjusting the washing machine's feet.

Use a water scale and spanner No. 32 (for feet) and 17 (for the nut). The spanners are not supplied.

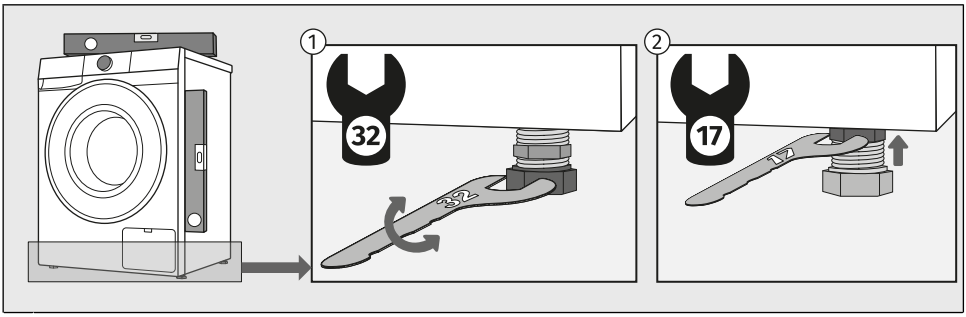

1 Level the washing machine in longitudinal and traverse direction by rotating the adjustable feet.

2 After adjusting the height of the feet, firmly tighten the jam nuts (counter nuts) using a spanner No 17, by turning them towards the bottom of the washing machine ⬆ (see figure).

INFORMATION!
Sometimes unusual or louder noise may appear during appliance operation; these are mostly the result of improper installation.
Incorrect levelling of the washing machine with the adjustable legs may cause vibration, appliance sliding across the room, and loud operation. Incorrect levelling of the washing machine is not subject to warranty.

Combination of washing machine and tumble dryer installation

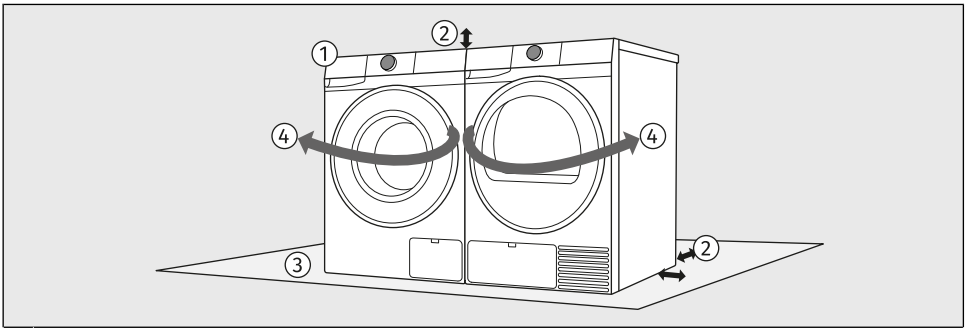

1 The washing machine and the dryer can be placed next to each other.

2 When positioning the appliance, observe the required clearances from the top and side surfaces of the washing machine and tumble dryer. (See chapter *Washing machine installation clearances when installing in a room*.)

3 The surface on which the washing machine and/or dryer is placed should be clean and level.

4 Due to the door opening direction and the handling process of laundry, it is recommended to place the washing machine on the left and the tumble dryer on the right.

Washing machine installation clearances when installing in a room

For safety reasons, the minimum distance between the back of the appliance and the wall must be at least 5 cm, and the distance between the appliance and any furniture above or beside it must be at least 2,5 cm.

When positioning the washing machine, also consider other elements in the room, such as doors or windows and their opening into the room. The washing machine must have enough space to open the door. (See chapter *WASHING MACHINE DESCRIPTION / Dimensions of the washing machine*.)

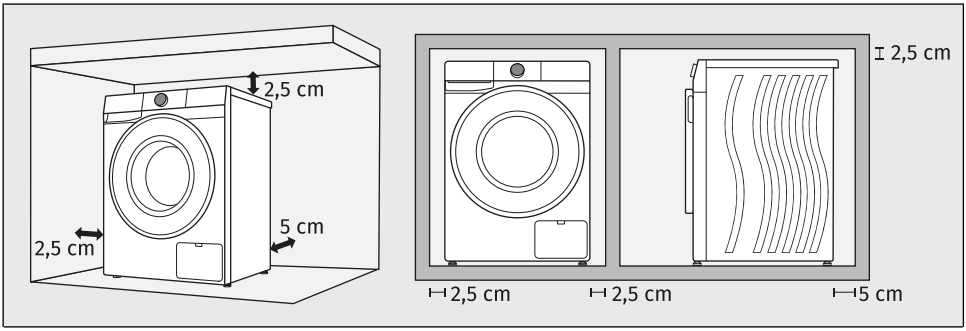

Observe the clearances shown in the illustration.

INFORMATION!
The washing machine may not be in contact with a wall or adjacent furniture. For optimum washing machine operation, we recommend observing the clearances from the walls as indicated in the figure. In case of failure to observe the minimum required clearances, safe and correct washing machine operation cannot be ensured. Moreover overheating can also occur.

INFORMATION!
The washing machine must not be enclosed or built into furniture.

WARNING!
We recommend a minimum clearance of 2,5 cm from the top edge of the unit to ensure sufficient ventilation. The minimum clearances from the side walls and the rear panel must also be observed.
The user must not interfere with or modify the appliance structure.

4.3 Connecting the washing machine to the water supply network

Connection to water supply

INFORMATION!
The type of water inlet connection on your washing machine's inlet hose may be a standard (2) connector or a safety shut-off system (3), depending on the model.

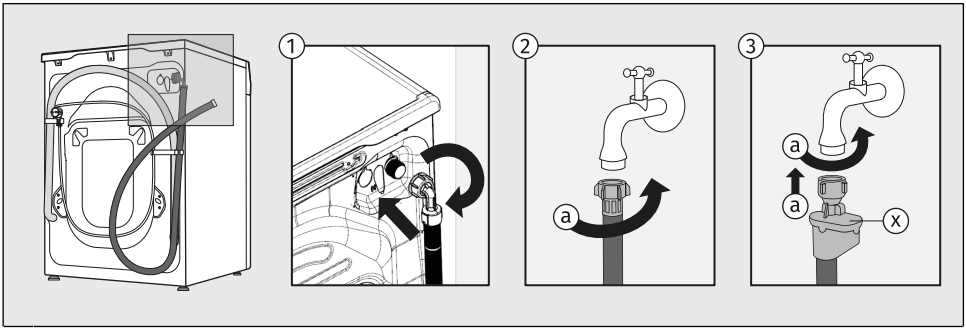

1 First, screw the rectangular end of the water inlet hose onto the valve on the rear wall of the washing machine (upper right).
The inlet hose is supplied inside the washing machine drum.

2 STANDARD CONNECTION
Attach the hose to the water tap by screwing it onto the thread (a).

3 AQUA - STOP CONNECTION
Attach the hose to the water tap by screwing it onto the thread (a).
If an internal tube or hose is damaged, a shut-off system is activated that cuts the water supply to the washing machine. In such case, the control glass (x) will turn red. Replace the water supply hose.

INFORMATION!
If the water flow is too weak, the **AUTO DOSE** system may begin to clog, which may lead to malfunction of the appliance. Detergent residues will begin to accumulate, which could cause the growth of microorganisms, and an unpleasant odour may develop.

INFORMATION!
For normal washing machine operation, the pressure in the water mains should be between 0,05 and 1 MPa (0,5–10 bar). Minimum dynamic water pressure can be determined by measuring the water flow.
In 60 seconds, min. 10 L of water should flow from a fully open tap.

INFORMATION!
Tighten the water supply hose by hand, firmly enough for the hose to have a good seal (max. 2 Nm). After connecting the hose, the seal must be checked for any leaks. Do not use pliers or similar tools when connecting the hose as this could damage the nut thread.
Only use the water supply hose supplied with the appliance. Do not use any used or other hoses.
When connecting the water supply hose, make sure to connect it in a way that allows adequate and unobstructed water supply.

Connecting and securing the water discharge hose

Position the drain hose in a washbasin, bathtub, or directly into a drain (the drain pipe diameter must be at least 4 cm (e)). The end of the drain hose may be no more than 100 cm (a) and no less than 60 cm (b) above floor level. It can be installed in three different ways.

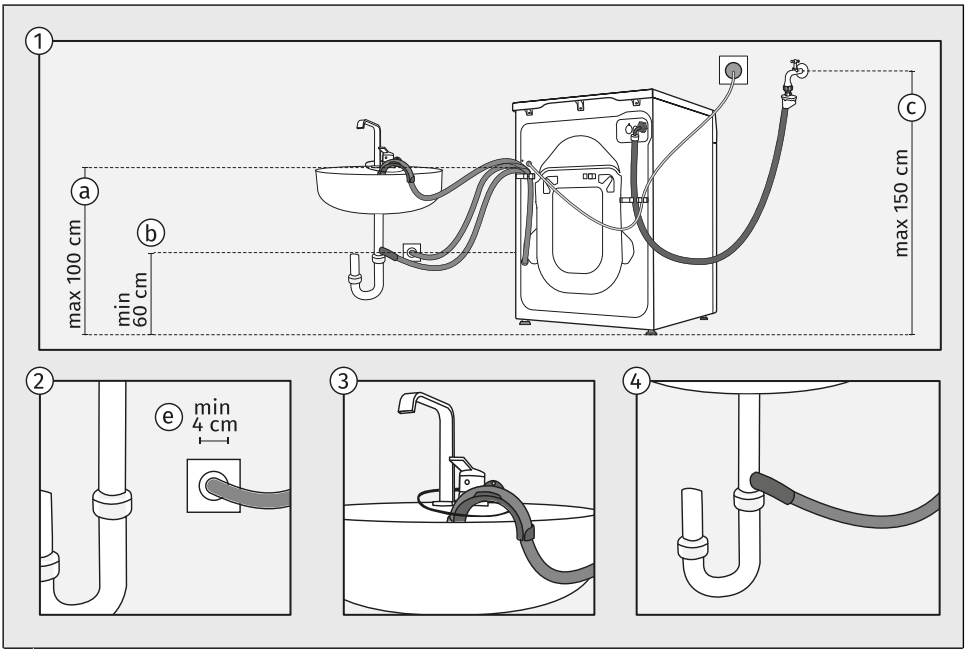

1 Observe the required distances for installing the hose. The distances and installation methods for the drain hose are shown in the illustration.

2 If you install the drain hose into a wall-mounted siphon, it must be correctly fitted so it can be cleaned, and the drain pipe diameter must be at least 4 cm.

3 Discharge hose end may be placed over a washbasin or a bathtub. B Use a string fed through the opening in the elbow support to attach the hose and prevent it from slipping to the floor.

4 Discharge hose may also be attached directly to the washbasin drain.

INFORMATION!
If the drain hose is not correctly attached, safe and correct washing machine operation cannot be ensured.

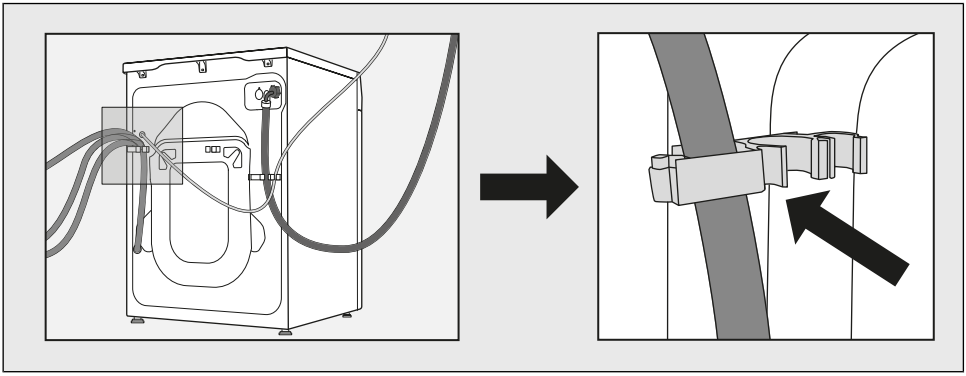

WARNING!
The drain hose must not be disconnected, placed on the floor, or extended.
The drain hose must always be secured in the plastic holder.

4.4 Connecting the washing machine to the electricity supply

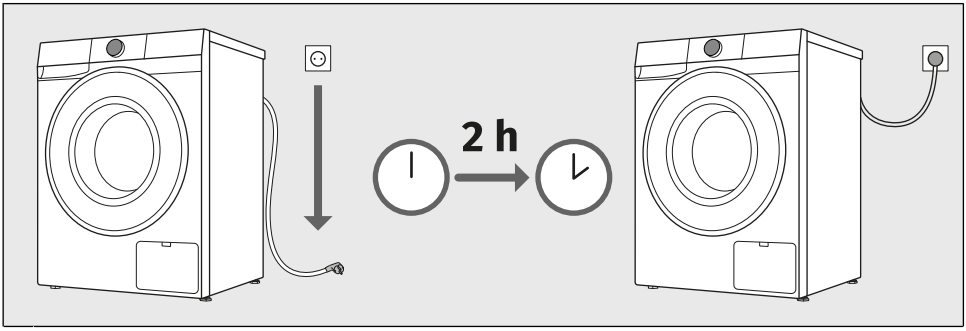

WARNING!
Before connecting the washing machine to the power mains, wait for at least 2 hours until it reaches room temperature.

ELECTRIC SHOCK!
We recommend using over-voltage protection overvoltage protection to protect the appliance in case of a lightning strike.

Connect the washing machine to a grounded power outlet. After installation, the wall outlet should be freely accessible. The outlet should be fitted with an earth contact (in compliance with the relevant regulations).

Information on your washing machine is indicated on the rating plate (see chapter *WASHING MACHINE DESCRIPTION / Technical data*).

WARNING!
The washing machine may not be connected to the power mains using an extension cord.

INFORMATION!
Do not connect the washing machine to an electrical outlet intended for an electric shaver or hair dryer.

INFORMATION!
Any repair and maintenance pertaining to safety or performance should be done by trained experts.

INFORMATION!
A damaged power cord may only be replaced by a person authorized by the manufacturer.

5. BEFORE USING THE APPLIANCE FOR THE FIRST TIME

5.1 Before switching on the appliance for the first time

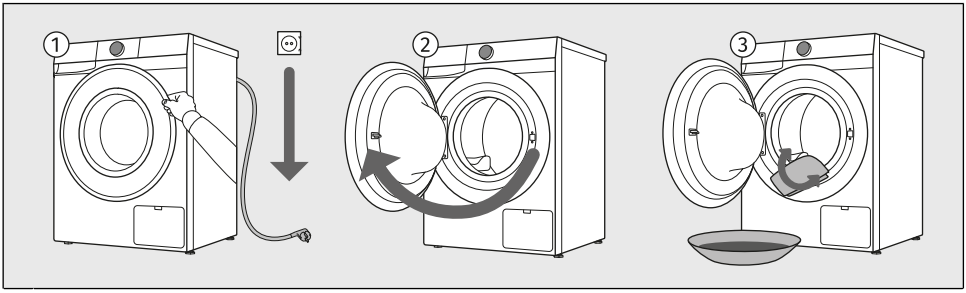

1 Make sure the washing machine is disconnected from the power supply.

2 Open the door towards yourself.

3 Clean the washing machine drum with a soft moist cotton cloth and water, or use the *Cotton white 90 °C* programme. There should be no laundry in the washing machine drum; the drum should be empty.

WARNING!
Do not use any solvents or cleaning agents that could damage the washing machine (please observe the recommendations and warnings provided by the cleaning agent manufacturers).

5.2 First connection to a Wi-Fi network

Application ConnectLife

ConnectLife is a smart home platform that connects people, devices and services. The **Connect**Life application includes advanced digital services and carefree solutions that allow users to monitor and control appliances, receive notifications from a smartphone, and update software (supported features may vary depending on your appliance and the region/country in which you are located).

Install the app

To connect your smart device, you need a home 2,4 GHz Wi-Fi network and a smartphone equipped with the application **Connect**Life.

You can download the **Connect**Life app for free from the Apple App Store® or Google Play™, or scan the code:

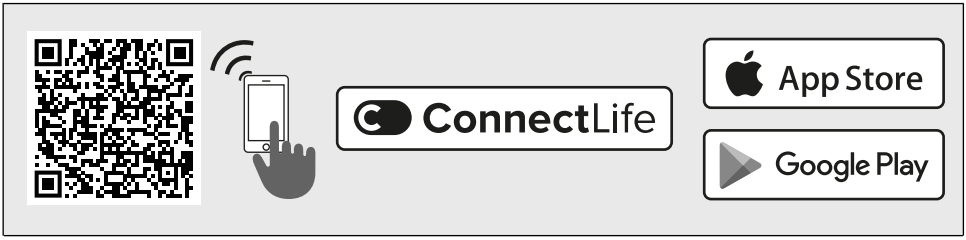

1. **Install the ConnectLife app and create an account or log in to your existing account if you already have one.**

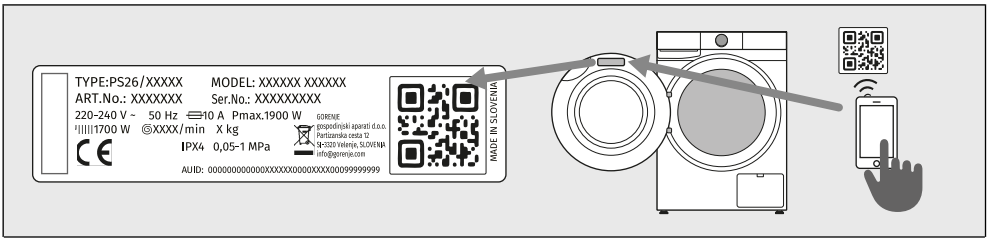

2. **In the ConnectLife app, go to the Add device menu and follow the instructions.**
Unique QR code can be found on the warranty card or on the rating plate of the appliance.
3. **After a successful connection, the appliance can be operated remotely via the application.**

How do I connect my device?

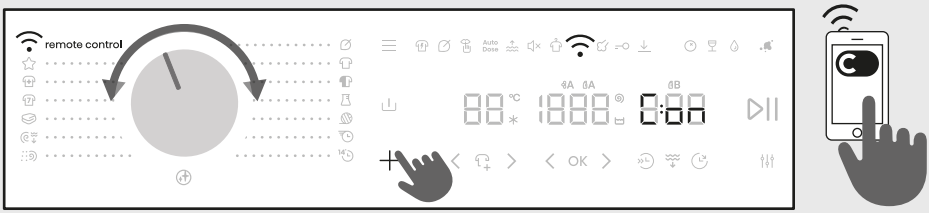

ENTER THE MENU

The appliance must be turned on; turn the selector to position ***Remote control*** .

Press and hold the + button on the device until the OK button lights up on the display.

Then press and hold the OK button until the function you want to activate (Con / PAr / UnP / OFF) appears on the display.

To activate the desired function, release the OK button while the function is displayed on the display.

CONNECTION BETWEEN THE APPLIANCE AND THE APPLICATION

Con	**CONNECT (POVEŽI NAPRAVO)** (from 3 to 6 sec) When you release the button, the function is activated, the countdown of 5 minute(s) begins, continue your activities in the application.
PAr	**PAIR (DODAJ UPORABNIKA)** (from 6 to 9 sec) When you release the button, the function is activated, the countdown of 3 minute(s) begins, continue your activities in the application.
UnP	**UNPAIR (ODSTRANI UPORABNIKA)** (from 9 to 12 sec) When you release the button, the function is activated, the countdown of 1 minute begins. This step will remove all active users of the appliance. If you want to operate the appliance remotely again, you will need to repeat the process of adding a user PAr.
OFF	**OFF (IZKLOP Wi-Fi)** (from 12 to 15 sec) When you release the button, the appliance's Wi-Fi connection is switched off. All appliance settings remain unchanged.

EXITING MENU

Exit the menu by holding down the OK button for more than 15 sec.

INFORMATION!
You can also control your appliance from your phone if you are not connected to the same Wi-Fi network as your appliance (the phone only needs an active internet connection). This means you can also control your appliance when you are away from home.

INFORMATION!
You can operate the appliance with multiple devices. You can also control and monitor the operation of the appliance with any phone connected to the appliance, regardless of which user has initiated the washing cycle. The appliance can be connected to/controlled simultaneously with several **Connect**Life user accounts.

INFORMATION!
After you have started the appliance from your phone, a person located next to the appliance can take over and manually turn off or control the appliance; the app will notify you in such case. In such case, controlling the appliance remotely from your phone is no longer possible. If you wish to control the appliance from your phone again, all required steps must be repeated.

Which Wi-Fi router can be used?

Only 2,4 GHz networks are supported. If the **Connect**Life app cannot find your local network during the connection set-up process, check the following:

- your router is operating at the frequency of 2.4 GHz,
- your network is hidden, and
- your signal is strong enough.

Do you have more questions?

Please visit us at **www.connectlife.io** or contact us at **hello@connectlife.io**.

Remotely upgrading the software

Check the software update options in the app **Connect**Life.

6. WASHING PROCESS, STEP BY STEP (1–7)

This chapter describes how to:
step 1: sort the laundry,
step 2: load the laundry into the washing machine and add detergents,
step 3: switch on the washing machine,
step 4: select the washing programme,
step 5: select additional functions,
step 6: start the washing programme,
step 7: complete the washing cycle.

6.1 Sort the laundry

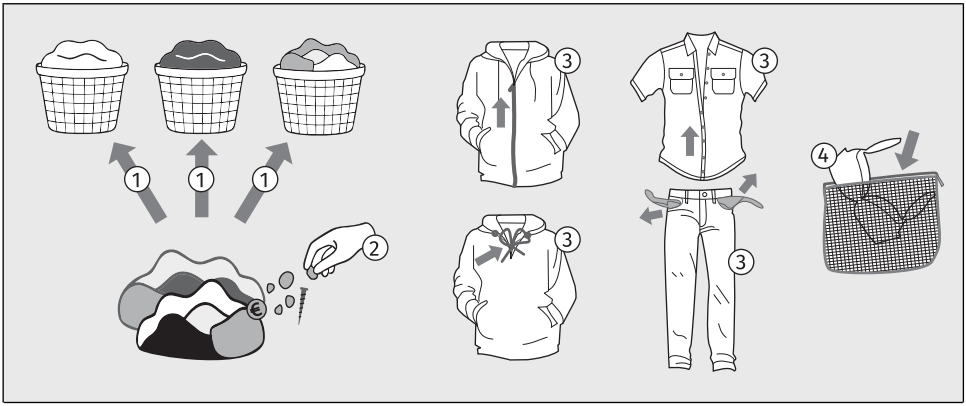

1. Sort the laundry by type of fabric, colour, soiling, and allowed washing temperature (see *Set of washing programs*).
   Wash the laundry that sheds a lot of fibre or lint separately from other laundry.
2. Before using the washing machine, carefully remove any solid objects and particles from the textiles you intend to wash to prevent damage to the appliance or clogging of the pump filter. This includes (also check all pockets and flaps):
   - solid objects (e.g., screws, clips, small stones, hay, etc.),
   - food residues (e.g., bones, dried dough, etc.),
   - dried particles of construction materials (e.g., mortar, sand, mud, etc.).
3. Close the buttons and zippers, tie any ribbons, and turn the pockets inside out; remove any metal clips that could damage the laundry and washing machine interior, or clog the drain. Empty the pockets. Coins, nails etc. could damage the machine and the fabric.
4. Place very sensitive clothes and small items in a special-purpose laundry washing bag. (The special-purpose laundry bag is available as an optional accessory.)

WARNING!
The manufacturer assumes no responsibility for malfunctions resulting from failure to follow these instructions, which may also affect the validity of the warranty. Furthermore, the manufacturer does not cover service costs in the event of foreign objects in the pump or pump cleaning.

When sorting laundry, see the table below and pay attention to the labels on the laundry.

Washing	**Drying**
The number in the basket symbol means the maximum allowed washing temperature in (°C).	The mark in the square means the drying method for the laundry.
95 Normal wash	Drying on a flat surface
60 Delicate wash	Line dry
30 Very delicate wash	Drying at a low temperature
Hand wash only up to max. 40°C	Drying at a high temperature
Washing is not allowed	Tumble drying not allowed
The line under the basket symbol indicates the level of treatment intensity: one line indicates gentle washing (less mechanical effect, lower spin speed), two lines indicate very gentle washing (e.g. wool, silk, synthetics).	If the square symbol has slanted lines, this indicates natural drying in the shade. Slanted lines can be used in combination with other symbols in the square.
Dry cleaning	**Ironing**
Dry cleaning is intended for textiles that cannot or should not be machine washed.	Steam ironing can permanently damage textiles.
A Dry cleaning with all types of solvents	Ironing at maximum 200°C
F P Dry cleaning with certain solvents (depending on the label)	Ironing at maximum 150°C
W Professional wet cleaning	Ironing at maximum 110°C
Dry cleaning not allowed	Ironing not allowed
Bleaching	
Bleaching is intended for refreshing and removing stains from textiles that are suitable for washing with bleach in a washing machine. Always follow the manufacturer's instructions.	
Bleaching with all types of bleaching agents	Bleaching not allowed
Bleaching with oxygen-based bleaching agents	

6.2 Put the laundry in the washing machine and add the detergent and/or softener

Loading the washing machine

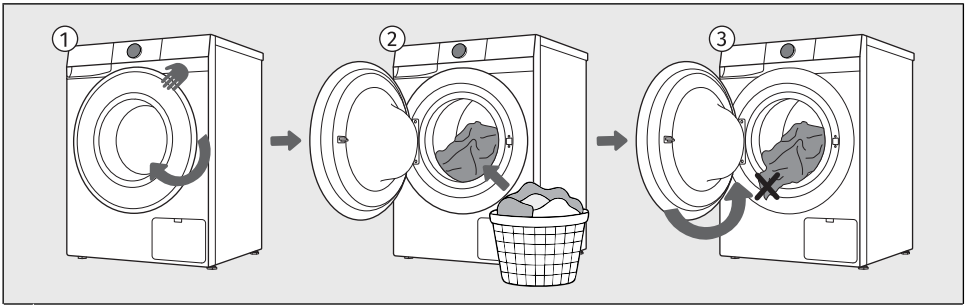

1 Open the washing machine door by pulling the handle towards you.

2 Insert the laundry into the drum (after making sure the drum is empty).

3 Make sure that no garment is stuck between the door and the rubber gasket. Close the washing machine door.

INFORMATION!
Do not overload the drum! See chapter *Set of washing programs* and observe your nominal load as indicated on the rating plate. If the washing machine drum is too full, the laundry will not be washed as thoroughly.
We recommend loosening the laundry and distributing it evenly in the washing machine drum.

Adding detergents and fabric softeners

INFORMATION!
For more detailed instructions on using the dosing container, see section *WASHING PROCESS, STEP BY STEP (1–7) / A set of additional features / Autodose* and *RECOMMENDATIONS FOR WASHING AND ECONOMIC USE*.
Do not add hardened lumps of powder detergent into the detergent dispenser as this may clog the piping in the washing machine.

WARNING!
While the washing programme is running, do not open the dosing container and do not add softener or liquid detergent to the **ADS** compartment.

WARNING!
When manually dosing detergent into the manual dosing compartment, the ADS system on the appliance must be switched off!
See chapter *APPLIANCE SETTINGS AND ADJUSTMENTS / Autodose (ADS)*.

View of the dosing container layout

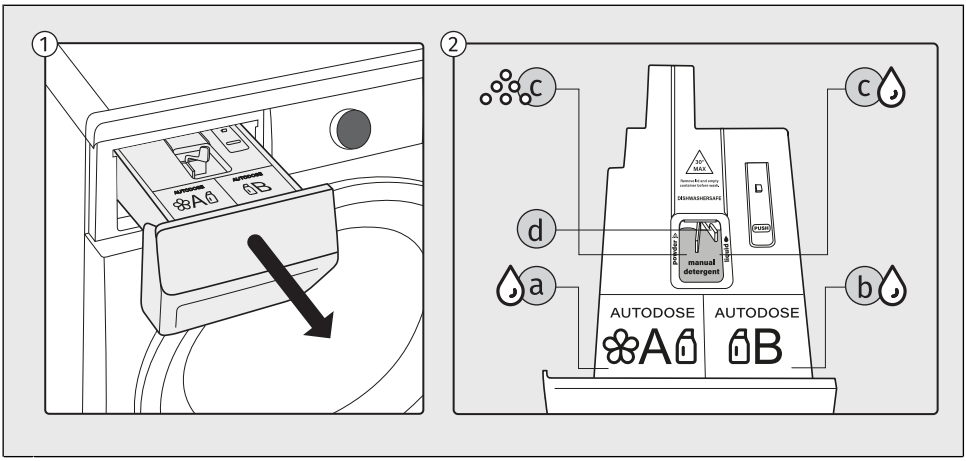

1 The dosing container is located on the upper left side of the washing machine. To remove it, hold the handle on the underside of the tray and pull it towards you.

2 You can add powdered or liquid detergents and liquid fabric softeners into the compartments of the dosing container:
- **a** - automatic dosing compartment for *liquid* fabric softener or *liquid* detergent
- **b** - automatic dosing compartment for *liquid* detergent
- **c** - manual dosing compartment for *powdered* or *liquid* detergent
- **d** - lever for selecting the type of detergent (left–right)

Filling the manual dosing compartment

INFORMATION!
Only liquid detergents or softeners may be added to the **AUTODOSE A** and **AUTODOSE B** compartments of the **ADS** system. The **MANUAL detergent** compartment may be filled with either liquid or powdered detergent.

INFORMATION!

When you are not using the automatic dosing system, add the detergent to the manual dosing compartment marked with **MANUAL Detergent**.
Fill the compartment with liquid or powdered detergent. Follow the markings on the left and right edges of the compartment.

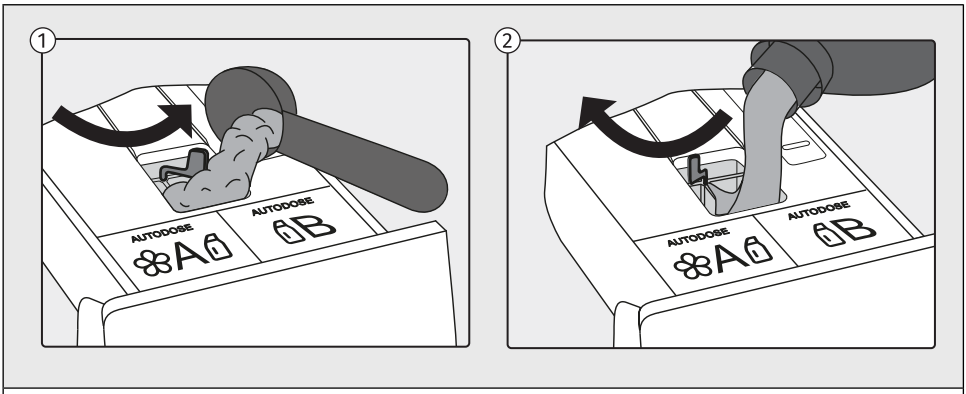

A maximum of 110 g of powder detergent or a maximum of 150 ml of liquid detergent goes into the compartment. Put excess detergent into the drum.

1 To use powdered detergent, turn the lever to the RIGHT and pour in the detergent.

2 To use liquid detergent, turn the lever to the LEFT and pour in the detergent.

INFORMATION!
A combination of **manual** detergent dosing and **automatic** fabric softener dosing is possible. In this case, the softener must be added into compartment **A**, and in the settings, compartment **A** must be set to fabric softener A.

The reverse combination, where compartment **A** is set to detergent (A) while the fabric softener is added to the manual dosing compartment, **is not possible**!

When manually dosing detergent, the automatic detergent dosing (A / B) must be switched off.
Manual dosing of fabric softener is not possible.
Bleach may only be added to the manual compartment.

Filling the automatic dosing compartments

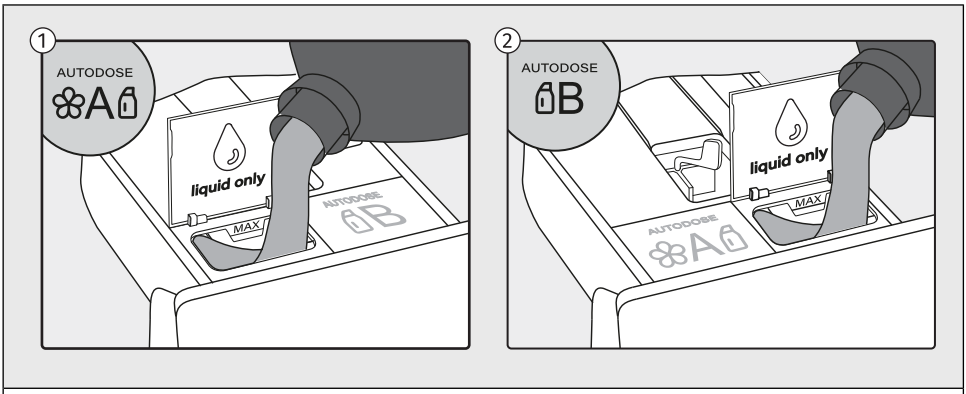

Possible combinations of using the ADS compartments:

- Compartment A: fabric softener, compartment B: universal detergent
- Compartment A: special detergent, compartment B: universal detergent
- Compartment A: universal detergent, compartment B: special detergent

When using detergent in both compartments, you must select the desired compartment in the ADS settings before starting the programme. See chapter *APPLIANCE SETTINGS AND ADJUSTMENTS*.

1 Compartment **AUTODOSE A**
You may add either fabric softener or detergent.
The compartment holds approximately 0,5 l of liquid product.

When adding liquid detergent to compartment **A**, you must set the 8A option to OFF in the settings.

2 Compartment **AUTODOSE B**
You may add detergent.
The liquid-detergent compartment holds approximately 1 l of liquid detergent.

INFORMATION!
On how to activate the ADS system, see chapter *APPLIANCE SETTINGS AND ADJUSTMENTS*.

INFORMATION!
Push the dosing container all the way into the opening, otherwise the appliance will not be able to take in the detergent or softener from the dosing container during operation. If the dosing container is not fully closed, the appliance will not function properly, and water may also leak through the dosing container handle. Once the dosing container has been filled, proceed to the settings off **ADS**.

6.3 Switch on the washing machine

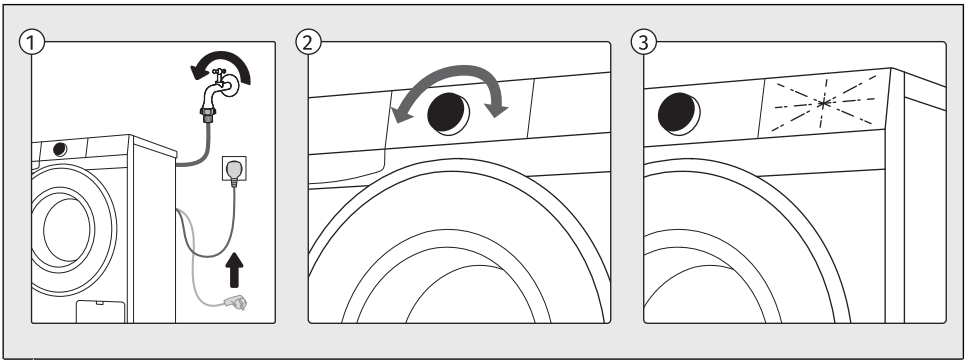

1 Use the power cord to connect the washing machine to power mains, and make sure the water supply is open.

2 To switch on the appliance, rotate the selector to any position.

3 The icons on the display light up.

6.4 Choose the washing program

Selecting a program on the control unit

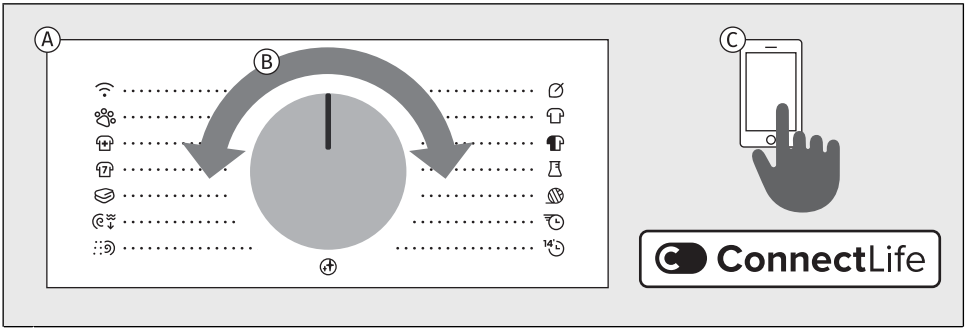

A The washing machine offers washing programmes that are indicated around the selector positions.

B Select the washing programme by turning the selector knob to the left or right (depending on the type and degree of soiling of the laundry). See chapter *Set of washing programs*.

C In addition to the programmes shown on the control panel, further programmes are available through the **Connect**Life app. Follow the instructions provided in the app.

INFORMATION!
During operation, the selector will not rotate automatically.

Explanation of symbols used below:

Maximum load	Modes
Spinning rate	Delay end
Temperature	Autodose
Cold wash	Anticrease
Prewash	Extra water
Fast + Faster	Stains
Steam	

Explanation of symbols for detergent types according to Regulation (EU) No. 1015/2010:

Universal	For delicate laundry and wool
For coloured laundry	Special

Set of washing programs

All programs listed on the control unit can be started on the appliance or from the app. To start a programme from the app, turn the selector knob to position *Remote control*. Close the door, then press the *(Start/Pause)* button. The appliance will then remain ready for app control for 24 hours. See also the following chapter.

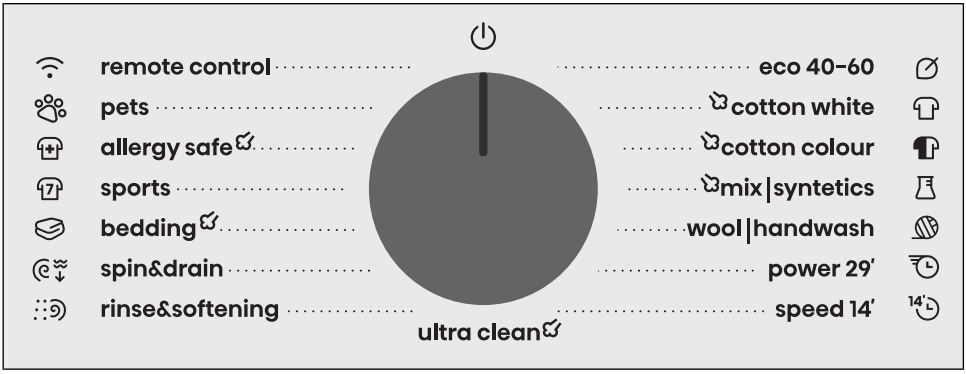

Programs on the front panel

Program			Option of selecting additional functions
Eco 40-60*	9 kg	1400	Auto Dose
40°C–60°C	Normally soiled cotton laundry that can be washed at both 40°C and 60°C together in the same cycle. * *Test programme for compliance with the Commission Regulation (EU) No. 2019/2023 on ecodesign and Regulation No. 2019/2014 on energy labelling.*		
Cotton White	9 kg	1400	°C Auto Dose
20°C–90°C	Use *Cotton white* programme to wash normally soiled cotton linen. Choose between different washing temperatures. Spinning speed can be set to your preference. Programme duration and amount of water will be adjusted to the amount of laundry. Select *Prewash* or *Extra water*l function for heavily soiled garment. For customers with allergies, we recommend the *Extra rinse* function for better rinsing of the laundry.		
Cotton Colour	4,5 kg	1200	°C Auto Dose
–60°C	This programme is used for washing coloured laundry using special-purpose detergents for coloured laundry. We recommend turning dark garments inside out.		
Mix|Syntetics	3,5 kg	1200	°C Auto Dose
–60°C	The *Mix / Synthetics* programme is adapted for clothing made of synthetic and mixed fibres or viscose and for easy care of cotton laundry.		

Program			Option of selecting additional functions
Wool|Handwash	2 kg	800	°C Auto Dose
–40°C	Gentle washing programme for washing wool, silk, and clothes that require manual washing. Maximum temperature is 40°C. This programme has a short spinning cycle. Top spinning speed available is 800 rpm. Do not use conditioner with this programme!		
Power 29'	1 kg	1200	Auto Dose
40°C	A programme for smaller loads of lightly soiled laundry.		
Speed 14'	1 kg	1000	Auto Dose
30°C	A programme for cotton garments that have hardly been worn or are only very lightly soiled.		
Ultra clean	/	1400	
90°C	This programme is used for cleaning the drum and removing the residue of detergent and bacteria. To select the programme, rotate the selector to the left or to the right to the *Ultra clean* (Self-cleaning programme) position. Other extra functions cannot be selected. The drum must be empty. **Do not add detergent or softener!** You can add some spirit vinegar (approx. 2 dl) or sodium bicarbonate (1 tablespoon or 15 g) for effective descaling. We recommend that you use the programme at least once a month. The detergent can be added to the manual dosing chamber or the drum.		
Rinse&Softening	9 kg	1400	Auto Dose
/	This programme includes two cold rinses and a short spinning cycle. The programme is suitable for laundry that only needs rinsing.		
Spin&Drain	9 kg	1400	
/	Use the programme when you only wish to spin the laundry or to drain out the water from wet laundy.		
Bedding	4,5 kg	1200	°C Auto Dose
30°C–90°C	This programme is used to wash bedding, pillows, and larger items. Weekly wash of your bedding will remove skin residue and mites.		
Sports	3,5 kg	1000	°C Auto Dose
–40°C	This programme is suitable for washing clothing with membranes, waterproof clothing, and breathable clothing, requiring simple care. It is suitable for sportswear made of mixed materials. It combines low temperature with gentle tumbling. Do not use conditioner with this programme!		

Program			Option of selecting additional functions
Allergy Safe	4,5 kg	1200	°C Auto Dose
40°C–90°C	This programme is used to wash normal to heavily soiled clothes that require special care, such as clothes for people with highly sensitive skin or skin allergies. We recommend turning the garments inside out as this will also thoroughly wash out the skin and other residues. You can also select the option to wash at maximum temperature and maximum spinning speed. Set temperature will be maintained for a longer time period than on conventional programmes in combination with intense agitation.		
Pets	4,5 kg	1200	Auto Dose
40°C	During this programme, pet hair is removed from your garments. The washing programme includes an automatic prewash and additional rinses. After the washing programme completion, clean the glass on the washing machine door and the pump filter in which pet hair could be trapped. We recommend running the *Ultra clean* programme after the wash, in order to thoroughly remove any pet hair from the washing machine.		
Remote control	Use the *Remote control* programme to remotely control your appliance (using your phone). It is possible to select all programs and functions that are available for a specific program of your appliance (see sections *BEFORE USING THE APPLIANCE FOR THE FIRST TIME / First connection to a Wi-Fi network* and *APPLIANCE SETTINGS AND ADJUSTMENTS / Remote control*). In the application, you can also select additional programmes and some additional settings.		

The following washing programmes can be selected in the ConnectLife app:

Program			Option of selecting additional functions
Pillow	4,5 kg	800	Auto Dose
40°C	Use this programme to wash blankets, coats, vest or jackets. Insert garments into the machine so that they do not touch the rubber seal or the glass.		
New Clothes	4,5 kg	1200	Auto Dose
30°C	A programme ideal for the initial wash of new garments that may release dye or contain textile finishing residues.		
Dark Clothes	4,5 kg	1200	Auto Dose
40°C	This programme helps maintain the intensity of dark colors.		

Program			Option of selecting additional functions
Plush Toys	4,5 kg	1000	Auto Dose
30°C	A programme for fluffy toys, gentle and effective.		
Kids Wear	4,5 kg	1200	Auto Dose
60°C	A programme designed for effective stain removal and enhanced hygiene. Ideal for everyday children's clothing.		
Swimwear	4,5 kg	1000	Auto Dose
30°C	A programme for your delicate swimwear, remove the salt and prolong the fabric.		
Waterproof	**2,5 kg**	800	
	A programme for impregnating garments with special agents that increase water resistance.		
Tights / Stockings	4,5 kg	1200	Auto Dose
30°C	An extra-gentle programme for fine and stretchable fabrics.		
Lingerie	4,5 kg	800	Auto Dose
30°C	A gentle programme for fine, lace, and stretchable fabrics. The use of a laundry bag is recommended.		
Kitchen Towels	4,5 kg	1200	Auto Dose
60°C	A programme designed for heavily soiled kitchen textiles such as cloths and towels.		
Bleaching	4,5 kg	1200	Auto Dose
60°C	This programme is designed for use with chlorine-free bleaching agents. It helps remove stubborn stains and restore the brightness of light-colored fabrics. Suitable only for textiles labeled as bleach-resistant.		
Activewear	4,5 kg	800	Auto Dose
30°C	Programme suitable for functional fibers and elastic materials commonly used in sportswear.		

Program			Option of selecting additional functions
Curtains	4,5 kg	800	Auto Dose
30°C	A gentle programme that uses a higher water level and minimal mechanical action to prevent creasing and damage to delicate decorative fabrics.		
Easy Care	4,5 kg	1000	Auto Dose
40°C	A programme for clothing made of synthetic and mixed fibres, and for simple care of cotton. Carefully read the washing instructions. Washing temperature can be set up to 60 °C, and spinning speed can be set up to 1200 rpm.		
Steam Refresh	**1,5 kg**	0	
/	The programme allows clothes to be softened and disinfected. Steam refresh reduces or eliminates the need for ironing. After steam refresh the laundry may be slightly damp or contain minor traces of water.		
Baby	4,5 kg	1200	Auto Dose
60°C	This programme is used for washing clothes that require special care. Such as baby clothes or clothes for people suffering from skin allergies.		
Shirts	4,5 kg	800	Auto Dose
30°C	This programme washes the collars and cuffs without wrinkling them. The wash takes place at a low temperature, with a greater amount of water and gentle tumbling.		
Jeans	4,5 kg	1200	Auto Dose
40°C	A programme for denim and jeans. Wash inside out.		
Shoes	4,5 kg	800	Auto Dose
30°C	A programme fro trainers without leather. Coarse soiling should be brushed off first before washing. A small additional load of towelling or cleaning cloths increases the cleaning performance and reduces noise. Do not use fabric conditioner. Follow the instructions on the care label.		
Fabric Care	4,5 kg	800	Auto Dose
40°C	The programme is ideal for delicate fabrics, as it reduces wear and tear by washing them gently. Fabrics retain their quality and their life is extended.		
Casual Wash	4,5 kg	1200	Auto Dose
30°C	A programme ideal for lightly soiled casual wear, helping maintain color and fabric quality with optimized energy efficiency.		

INFORMATION!
In terms of energy and water consumption, programmes that operate at lower temperatures and last longer are generally the most efficient.

INFORMATION!
Noise and residual moisture content are affected by the spinning rate: the higher the spinning rate in the spin cycle, the higher the noise and the lower the residual moisture content.

INFORMATION!
It is mandatory to turn off ADS when manually dispensing powder or liquid detergent. The dosage must also be in line with the manufacturer's instructions with regard to the washing temperature, selected washing programme, degree of soiling and water hardness.
When excessive foaming occurs in the washing machine or foam spills through the dosing container, the washed laundry must be thoroughly rinsed. Choose a washing programme with a large amount of water without using detergent.

INFORMATION!
Maximum amount of laundry in kg (for the *Cotton* programme) is indicated on the rating plate fitted under the washing machine door (see chapter *WASHING MACHINE DESCRIPTION / Technical data on the rating plate*).
Maximum or nominal load applies to laundry prepared pursuant to the IEC 60456 standard. For better washing effect, we recommend loading the drum to 2/3 when using the *Cotton* programmes.

INFORMATION!
Low water temperature, low mains voltage and different washing loads may affect the washing time; the remaining time displayed is adjusted accordingly during the washing process.

6.5 Select the additional functions

Choosing extra functions

Once you have selected a washing programme, you can also choose and adjust additional functions for certain programmes.
Some functions can also be selected and adjusted later, while the programme is running. (See chapter *APPLIANCE SETTINGS AND ADJUSTMENTS*.)

This is done in two or three steps:
- **selecting the function** (hereinafter referred to as **Selection**),
- **setting the function level**, if the function allows it (hereinafter referred to as **Level / Description / Display**),
- **activating the function** (hereinafter referred to as **Activation / Deactivation / Exit**).

If you do not want to select additional functions, press the *(Start/Pause)* button.

The individual functions are described below.

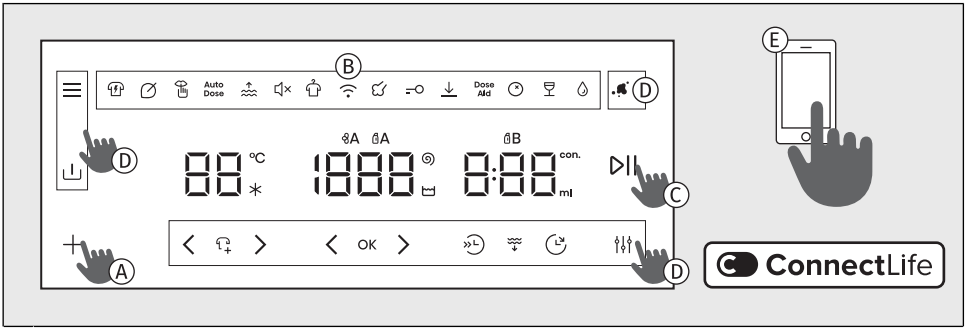

A By briefly pressing the + key, you select the function, and by pressing and holding the OK key, you confirm the selected function.

By pressing the < > keys (located next to the OK key), you scroll through the possible additional functions, which are partially highlighted at the top of the screen.

B The symbol of the selected function will be partially or fully illuminated. When the function is not enabled, the symbol will not be illuminated. The function currently being selected flashes and is partially illuminated.

Confirm the setting by pressing the OK button, the function will be fully illuminated.
If you want to select or set an additional function, you must repeat the procedure described above.

C To start the wash cycle, press the *(Start/Pause)* button to activate the function. The selected functions will be illuminated during programme operation.

D You can directly select, set and confirm some additional functions and settings using the ☰ ⏻ < OK > keys.

E You can also select additional programs in the app **Connect**Life. Follow the instructions in the app.

INFORMATION!

If you press and hold the + button for more than three seconds, you will enter the *Wi-Fi* settings (applies when *Remote control* has been selected using the selector knob.

If you select the *Stains* option, the *Prewash* option becomes disabled.
Prewash can be activated if the *Autodose (ADS)* or the *Autodose* compartment is selected.

A set of additional features

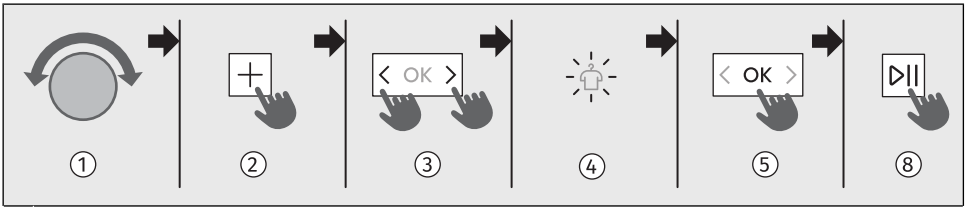

1 Use the selector knob to select the desired programme.

2 Press the + button to enter the function selection menu. The functions available for the selected programme will then be partially illuminated.

3 Press the < > buttons located next to the OK button (this allows you to scroll through the available functions) until the symbol of the desired function starts flashing.

4 The symbol of the desired function flashes.

5 Press the OK button to confirm the selected function; the symbol of the selected function lights up fully.

6 The function symbol is fully illuminated. Use the < > buttons to set the required level (when available).

7 The function is activated by pressing the OK button.

8 To start the wash cycle, press the *(Start/Pause)* button. During the washing programme, all selected functions will be fully illuminated.

Additional function options vary depending on the programme.

°C	**Temperature** **Changing the temperature for the selected program.**
Selection:	To change the washing temperature, press < or >, located below the temperature setting. Each programme has a preset temperature, which can be adjusted on certain programmes. Press < to lower the temperature and > to increase it. When selecting a cold wash, the ✳ indicator lights up. If temperature selection is not possible, – is displayed on the display.
Activation:	If the setting is not possible, the arrows below the temperature display < > are not illuminated. The selected temperature is shown on the display.

	Spin (spinning rate/pump stop/drain) **To adjust the spinning rate.**
Selection:	You can set the desired spin speed. Each programme (except the Ultra clean programme) has a preset spin speed, which can be adjusted. To adjust the spin speed, press < or >, located below the spin-speed setting. Press < to decrease the spin speed and > to increase it. • If you want to **drain the water**, select *Draining water*, and 0 appears on the display. The washing time is shortened. • If you want to **keep the final rinse**, select *Rinse hold* rh. Activate this function to prevent creasing when you cannot remove the laundry from the washing machine immediately after the cycle ends. The button *(Start/Pause)* and the symbol rh flash. Before continuing, you can set the spin speed. To complete the cycle, you must press the button *(Start/Pause)*; until then, the washing programme will remain on hold before the final rinse. To continue, press the *(Start/Pause)* button. The water will be drained and the final spin will be performed.
Activation:	If the setting is not possible, the arrows below the spin speed display < > are not illuminated. The selected spin speed is shown on the display.

	Fast wash (shorter washing time) **For quick washing of laundry.**
Selection:	When the function is activated, the washing programme will be carried out with a shorter washing duration. There are two available choices (depending on the selected washing programme). After pressing the button, the final programme time is corrected on the display. If you want to shorten the washing programme even further, press the button once more; the final programme time is corrected again. If you press the button again, the setting is reset. 1. press : *Fast* 2nd press : *Faster* 3rd press : *Default* – default washing mode (default) We recommend a half-load for the *Cotton white* programme.
Activation:	If the setting is not possible, it is not displayed. When you have selected the *Fast*, briefly press the *(Start/Pause)* button to start the programme. If you hold the *(Start/Pause)* button for 3 seconds before the programme starts, the 3-2-1 animation is activated and the *Fast* function setting is saved.

	Delay end **Function for delaying the end of the wash cycle**
Selection:	Select the desired programme and extra functions. Close the washing machine door. To set the delay of the end of the wash cycle, press the button. By pressing <, you shorten the delay time; by pressing >, you extend it. The buttons are located below the spin speed settings. Where the spin speed is displayed, the delay time is shown when this function is selected. The Delay end function can be set up to 24 h: - up to 6 hours: in 30-minute steps, - then up to 24 hours: in 1-hour steps. Confirm the delay time by pressing the OK button. If you want to change the delay time again, press the button. The indicator lights up on the display. The end-of-cycle time is shown. **Example of function setting:** **It is now 9 PM, and you wish the washing programme to be completed at 6 AM the next morning. In this case, set the delay end time to 9 hours.**
Interruption:	• If you want to **interrupt** the *Delay end* function **while setting it**, press the button until the time -:-- appears. Wait at this setting 5 sec and you will exit the menu without an end delay set. You can also interrupt the function by turning the selector to another programme and then returning it to the previously selected one. Re-select the desired functions and press the *(Start/Pause)* button to start the washing cycle. • If you want to **skip** the function, press and hold the *(Start/Pause)* button for 3 sec, the 3-2-1 animation starts, then the washing programme will start immediately.
Activation:	Press the *(Start/Pause)* button to activate. After activation, all washing parameters and selected additional functions are displayed on the display. Washing machine starts counting down the set time. When the countdown reaches the programme duration (e.g. 2:30), the washing programme starts automatically.

	Modes (Washing mode) **To select the washing mode.**
Selection: 1 = 2 = 3 =	By pressing the button, you select between washing mode options. If the selection is not possible, the symbol flashes twice and an acoustic signal sounds. Only one option can be set at a time. Choice of options: 1st press: *Intensive* – for intensive wash mode (wash that improves cleaning performance, with extra water and extended washing time) 2nd press: *Saving mode* – for economical wash mode (wash that saves energy – lower water consumption) 3rd press: *Silent* – for silent wash or night wash mode (wash that reduces noise and extends washing time) 4th press: *Default* – default washing mode (preset).
Activation:	The function activates by pressing the button or after 5 seconds of inactivity. The symbol for the selected washing mode lights up and activates, then you can additionally select any of the other available functions.

	Stains (stain removal) **For removing different types of stains.**
Selection: 1 = 2 = 3 =	By pressing the button, you select between stain removal options. If the selection is not possible, the symbol flashes twice and an acoustic signal sounds. Only one option can be set at a time. Choice of options: 1st press: *Tomato* (3) – fruit and vegetables (tomato purée, jams, baby food, cherries, chili sauces, spinach, ...) 2nd press: *Red wine* (2) – wine (red wine, coffee, tea, ...) 3rd press: *Grease* (1) – grease (oil, butter, eggs, mayonnaise, salad dressing, machine oil, ...) 4th press: default washing mode (preset). If you have selected the *Stains* function, the following functions cannot be selected: *Modes*, *Extra water*, *Prewash*, *Steam*, *Anticrease*.
Activation:	The function activates by pressing the button or after 5 seconds of inactivity. The symbol for the selected stain type lights up. The symbol for the selected stain lights up and activates, then you can additionally select any of the other available functions.

	Prewash **Washing heavily soiled laundry, particularly with stubborn superficial stains.**
Selection:	Prewash can be selected on the chosen washing programme only if the symbol is lit. If the selected program already has a preset prewash, the and (/ /) functions cannot be selected. If **ADS** is switched off, the prewash function will not be performed, even if the programme has prewash preset.
Activation:	The function is activated by pressing the button.

Auto Dose	**Autodose (ADS)** -system **Function for automatic dosing of liquid detergent and fabric softener.**
Selection: A A B	When ADS is enabled, the symbol Auto Dose is fully illuminated. When either of the two compartments is empty, the corresponding symbol A or B flashes. The setting procedure is described in the chapter *APPLIANCE SETTINGS AND ADJUSTMENTS/Autodose (ADS)*.
Activation:	To start the washing press the *(Start/Pause)*.

	Extra water (additional water/high water level) **Function for washing laundry with a larger amount of water on some programmes.**
Selection:	For washing with a higher water level and an additional rinse. Press button +, then press buttons < > located next to button OK until symbol starts flashing. Press OK to confirm your selection.
Activation:	The function is activated by pressing the OK button.

	Steam (steam desinfection) **Function for adding a steam cycle at the end of the wash program to disinfect laundry.**
Selection:	Press button +, then press buttons < > located next to button OK until symbol starts flashing. Press OK to confirm your selection.
Activation:	The function is activated by pressing the OK button.

	Anticrease (anticrease) **A function to loosen and reduce creasing of laundry.**
Selection:	Using this function is recommended for the care of more delicate laundry. You can select the function if you do not remove the laundry from the washing machine immediately after the cycle has finished. The function must be activated before starting the programme. Press button +, then press buttons < > located next to button OK until symbol starts flashing. Press OK to confirm your selection. AC / End will appear on the display unit.
Activation:	The function is activated by pressing the OK button.
Interruption:	A function can be deactivated at any time by pressing the *Start/Pause* button.

	OPTIMIZING WASHING TIME **In the early stage of the washing programme, the washing machine uses advanced technology to detect the amount of laundry. After load detection, the washing machine adjusts the programme duration.**
Selection:	Automatic
Activation:	Automatic

6.6 Start the washing programme

Starting the programme

Close the washing machine door and start the washing programme by pressing the *(Start/Pause)* button on the right side of the display.

Pausing, stopping and changing the program

Briefly press the *(Start/Pause)* button to **pause** the washing programme. On the display, the remaining time alternates between on and off. Briefly press the Čas do konca pranja button again to resume the washing programme.

Stop the washing programme by pressing the *(Start/Pause)* button and holding it for 3 seconds. The current programme will stop, and the washing machine will drain the water. The door will unlock after a certain time. The same procedure applies if you turn the selector to position ⏻. To switch on the appliance, turn the selector to the desired programme again, set the functions, and start the washing programme by pressing the *(Start/Pause)* button.

Opening the Door

The door unlocks after the washing programme is completed and can be opened.

It can also be opened after pausing or stopping the washing programme, provided the water level in the washing machine is sufficiently low and the water temperature is not too high.

INFORMATION!
If the washing machine is not connected to the power mains or in case of a power supply failure during the programme execution, then the washing machine door cannot be opened. In such case, the washing machine has to be properly connected, or a service technician should be contacted.

Adding/removing laundry during the operating of the appliance

Press the *(Start/Pause)* button; after a certain time you will be able to open the door:

- If the water temperature in the drum is below 50 °C and the water level in the drum is below a certain level (and the washing machine is not in the final spin phase), the conditions are met for the electronic door lock to release and the washing machine door to unlock (the *Start/Pause* button flashes and the remaining time flashes on the display). If the water temperature in the drum is above 50 °C, adding laundry during washing is not possible.
- If the water level is too high, the water must first be drained from the washing machine drum. Press the button to start draining the water from the appliance. The display lights up , the 3-2-1 animation runs, the water is drained from the appliance, and the door unlocks.

You can open the washing machine door and add or remove laundry from the drum. Press button *(Start/Pause)* to continue the washing programme.

INFORMATION!
Washing time will resume from the point at which the washing programme was interrupted.

INFORMATION!
If you add a considerable amount of laundry during the wash, the laundry could be washed less effectively, since the washing machine initially sensed a lower weight of the load of laundry and added a smaller amount of water. Insufficient amount of water relative to the amount of laundry could also cause damage to the laundry (rubbing of dry laundry), and washing time can be longer.

Power supply failure

The washing programme is interrupted if a fault occurs. A fault or error message is displayed on the display. Refer to the relevant chapter *TROUBLESHOOTING AND SERVICING / Display Message Table*.

In case of a power supply failure, the washing programme is interrupted. When power supply is restored, the washing programme is resumed from the point at which it was interrupted. Upon completion of the washing cycle, End / PF will alternate on the display unit. This informs the user about a power supply failure and on the effect on the execution of the washing programme.

When the power supply is restored, PF appears on the display; after 5 seconds, the washing programme will resume from the phase where it was interrupted.

6.7 Complete the washing cycle

At the end of the wash, an audible signal sounds and End *(End)* is displayed on the screen. 5 min after the program ends, the appliance switches to a low-power standby or sleep mode.

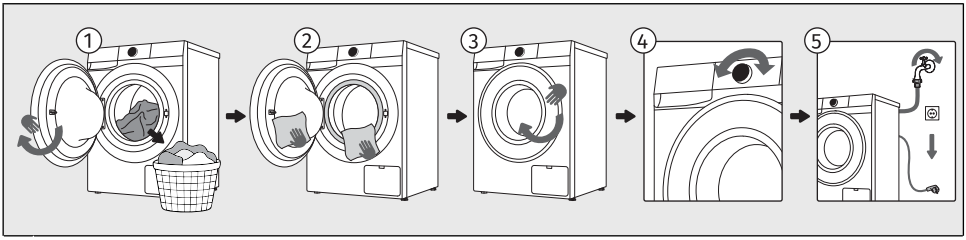

1 Open the washing machine door. Take the laundry from the drum.

2 Wipe the rubber door gasket and the door glass.

3 Close the door.

4 Switch off the washing machine (turn the selector to position ⏻).

5 Shut off the water supply tap. Unplug the power cord from the outlet.

INFORMATION!
After the programme is finished, remove the laundry from the drum as soon as possible to maintain the freshness of the laundry.

7. APPLIANCE SETTINGS AND ADJUSTMENTS

This chapter describes how to:
- set up the ADS system,
- save the selected program and functions,
- customise your appliance using additional settings,
- access the user settings menu.

There are a few additional settings that can be set on the appliance. This will allow you to further customize the device to your personal use and needs.

The basic principle for selecting additional settings is similar to selecting functions. See chapter *WASHING PROCESS, STEP BY STEP (1–7) / A set of additional features*.

7.1 Autodose (ADS)

Auto Dose	**Autodose (ADS) system** **Automatic detergent and softener dosing**
Factory setting:	**In the appliance, the ADS is activated by default for all programmes where it is enabled.** See *Set of washing programs*). The dosage level is preset to level for both compartments **A** and **B**. Compartment **AUTODOSE A** is preset for fabric softener. Compartment **AUTODOSE B** is intended for detergent only. **ADS** can be turned on/off by turning off by pressing the button: - softener or detergent dosing in compartment **AUTODOSE A** or - liquid detergent dosing in compartment **AUTODOSE B** or - softener and liquid detergent dosing in both compartments **AUTODOSE (A, B)**.
General setting:	You can turn the ADS system on or off using the button. Press button , then press buttons located next to button OK until symbol Auto Dose starts flashing. Press OK to confirm your selection. ADS is off if the Auto Dose symbol is partially lit. ADS is on if the Auto Dose symbol is fully lit. **Adjusting the dosing rate of softener and liquid detergent affects all programmes.** Press the button to enter Settings. The Auto Dose symbol flashes. Press the OK button to enter the ADS settings. The Auto Dose symbol lights up steadily. Use the buttons to scroll between A A and B . Confirm the selected compartment/detergent by pressing the OK button. The symbol lights up steadily and flashes.

Setting compartment A A A	**Setting the softener or detergent in compartment AUTODOSE A** 1. The A indicator flashes on the display. 2. Press button OK to confirm that you want to adjust the dosing level for compartment **A** for the softener. 3. Use buttons < or > to navigate through the different dosing levels. It is possible to choose three dosage levels: = low dosing rate = medium dosing rate = high dosing rate When OFF is displayed, automatic dosing is switched off. In this case, the appliance will not take detergent from this compartment. Press OK to confirm the selection and press > to move to the next setting A. **If you pour fabric softener into compartment A, you must disable automatic dosing A (detergent) in the settings to OFF.**
Setting compartment B B	**Setting detergent in compartment AUTODOSE B** 1. The B indicator flashes on the display. 2. Press button OK to confirm that you want to adjust the dosing level for compartment B. 3. Use buttons < or > to navigate through the different dosing levels. When OFF is displayed, automatic dosing is switched off. In this case, the appliance will not take detergent from this compartment. **If you pour detergent into compartment A, you must disable automatic dosing A (softener) in the settings to OFF.** Press OK to confirm selection. By pressing the button, exit the menu.
Activation:	To continue, press the *Start/Pause* button to start the washing program.

INFORMATION!
Use of other non-homogenised or homemade liquid detergents can cause malfunction of the **ADS**. Any servicing required due to such problems shall not be covered by the warranty. The functioning of **ADS** is tested with liquid detergents from the world's leading manufacturers. Do not mix different liquid detergents. When changing liquid detergent, the containers need to be cleaned.

INFORMATION!
When **ADS** is switched off, the ***Prewash*** function cannot be selected on the program.

INFORMATION!
Before starting the washing program, you can change the dosing settings at any time.

On programs where automatic dosing is performed, the A / A and B symbols are always lit.

INFORMATION!

When one of the compartments for ADS is almost empty, the symbols A / A or B flash (when selecting or during the operation of a programme). Before the next washing cycle, the compartments for automatic dosing (A, B) must be filled.

Dosing container of the ADS system

INFORMATION!
With the **ADS** system, cleaning is especially important, as an uncleaned container worsens the functionality of the system.

INFORMATION!
To the **ADS** dosing container, you can only add liquid detergents and liquid softeners!

Symbols of detergent dispenser compartments	
liquid	liquid detergent (compartment for manual addition of detergent)
powder	powder detergent (compartment for manual addition of detergent)
manual detergent	manual addition of detergent
AUTODOSE A	liquid softener
AUTODOSE B	liquid detergent
MAX	the cleaned dosing container can be washed in the dishwasher (maximum permitted washing temperature is 55°C)

7.2 Saving programe and selected functions

You can change the default settings of each washing programme and save them for easier personal use.

↓	**Settings saved** **Function to save your settings for selected programs and functions.**
Selection:	Press the + button to enter the ↓ setting menu. The function symbol is fully illuminated. Use the < > buttons to scroll until the ↓ symbol is partially illuminated.
Activation:	Settings are saved by pressing the OK button. The programme is saved until you change it again using the same procedure or if you reset the personal settings to the factory settings (see the chapter below).

	AdaptTech **Automatic function for saving frequently used programs and functions.**
Activation:	When a washing programme setting is used three times in a row, this setting is stored as default and will always be suggested when you select that washing programme. If you manually store the settings of a washing programme, the **Adapt**Tech function on this washing programme is deactivated. The programme is saved until you reset the personal settings to the factory settings (see the chapter below).

7.3 Additional appliance settings

	Child lock **A safety feature.**
Activation:	**As long as the child lock is activated, programme, settings, or additional functions cannot be changed.** By using this setting, you lock the display so that children cannot accidentally start or change the cycle. Press the button to enter the *Child lock* settings menu. The function symbol is partially lit. Press the button repeatedly until the symbol starts flashing. Confirm activation of the child lock by pressing the OK button. The symbol lights up fully and remains illuminated. The function can also be activated during the programme using the procedure described above. If the child lock is activated, programme or additional functions cannot be changed. It remains active even after the appliance is switched off, so you must switch it off before selecting a new programme.
Deactivation:	To switch off (deactivate) the child lock, press button 3 sec for second. Animation 3-2-1 will start. At the end of the animation, the function turns off (is deactivated). In the same way, *Child lock* can also be turned off during the washing programme.

	Remote control **Function for remote control.**
Description:	To use this function, the appliance must be connected to the network, see chapter *BEFORE USING THE APPLIANCE FOR THE FIRST TIME*. Remote control is available for 24 hours after activation, even when the appliance enters standby mode (the symbol remains illuminated). The door stays locked during this time and cannot be opened. Cancel remote control by pressing the *Start/Pause* button for 3 seconds or by switching off the appliance (turn the selector to position). Continue operating the appliance in the **Connect**Life app, where you can choose from several options (selection, launch, and monitoring and stopping of the programme, amongst other additional settings, ...) Washing machine operation can be paused or stopped by choosing *Start/Pause*, *Add clothes* ... Some options can be implemented remotely in full, and some require your physical presence, such as adding laundry during a washing cycle ().
Selection:	Turn the selector to *Remote control*.
Activation:	After you have loaded the laundry, close the dryer door. Continue activities in the app (select a program, additional functions and start drying).

7.4 User settings menu

To enter the User Settings Menu, select a washing programme and simultaneously press and hold + and ⚙ until the 3-2-1 animation is completed (at least 3 seconds).

Press < > to scroll through the available user settings, which are shown on the display:
1 - *Sound On/Off*
2 - *Display brightness*
3 - *Water hardness*
4 - *Factory reset*
5 - *Pregled zadnjih treh napak*
6 - *Total number of cycles*

When you are in the desired setting, move between the setting levels by pressing the button.

Press the + button to save and exit; the setting will be stored and you will return to the first settings level.

You can change the following settings:

	Sound On/Off **Option to switch off or adjust the sound volume.**
Display: 1	The sound volume is preset to level 2. Press the button to select the sound level or to switch the sound off. If the sound is switched off, there will be no audible signal at the end of the washing programme. Available settings: L01 = silent sound setting L02 = medium sound setting L03 = loud sound setting L00 = sound off

	Display brightness **Option to adjust the brightness of the symbols illuminated on the display.**
Display: 2	The preset brightness is set to 100%. Press to switch between full illumination (100%) and partial illumination (50%) on the display. Available settings: L01 = 100% brightness L02 = 50% brightness

	Water hardness **Option to set the water hardness.**
Display: 3	The water hardness is preset to level 2. Press button to select the water hardness level. Available settings is: L01 = soft water L02 = medium-hard water L03 = hard water

	Factory reset **Delete all settings and return to the factory settings.**
Display: 4	The display shows rES. By briefly pressing all settings will be restored to the factory settings (your personal settings and all saved programmes will be deleted). The appliance automatically returns to the home screen.
Exit:	If you do not want to return to the *Factory reset*, press to exit.

	Overview of the last three errors **Option to review the last detected errors of the washing machine.**
Display: 5	Press to scroll through the last errors. The error code will be displayed, see chapter *TROUBLESHOOTING AND SERVICING / Display Message Table*.

	Total number of cycles **Option to review the completed cycles of the appliance.**
Display: 6	Press the to display the number of completed cycles.

8. CLEANING AND MAINTENANCE

This chapter describes how to:
- clean the exterior of the washing machine,
- clean the detergent despenser,
- clean the water inlet connection and door seal,
- clean the pump filter.

ELECTRIC SHOCK!
Before cleaning, unplug the washing machine from the power mains.

8.1 Cleaning the washing machine exterior

WARNING!
Danger of electric shock.
Even when the washing machine is switched off, it remains under voltage for some time. Always unplug the power cord before cleaning or performing maintenance.

WARNING!
Damage that can be caused by water.
Do not clean the washing machine with a jet of water, as water could enter the appliance and damage its components.

WARNING!
Damage that can be caused by cleaning agents.
Do not use any solvents or cleaning agents that could damage the washing machine (please observe the recommendations and warnings provided by the cleaning agent manufacturers).

Wipe all parts of the washing machine with a soft cloth until dry.

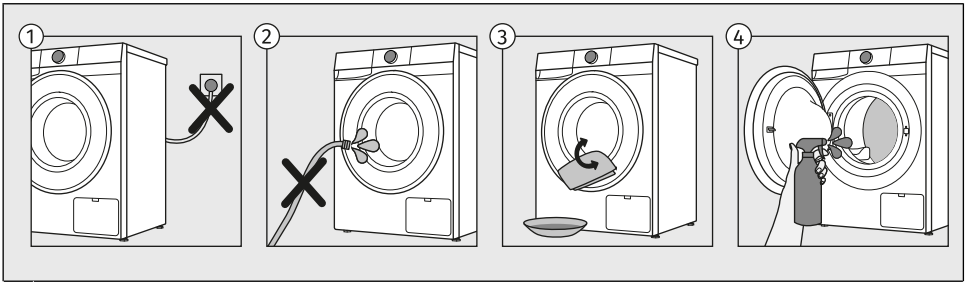

1 Before cleaning, unplug the washing machine from the power mains.

2 Do not clean the washing machine with a jet of water!

3 Clean the washing machine exterior and display unit using a soft damp cotton cloth and water.

4 Clean the drum using a soft cotton cloth and a suitable cleaning agent.

8.2 Cleaning the dispenser tray

INFORMATION!
Cleaning the ADS system is very important for the correct operation of the appliance! Clean the empty container of the ADS system regularly, at least once a month or with every other filling.

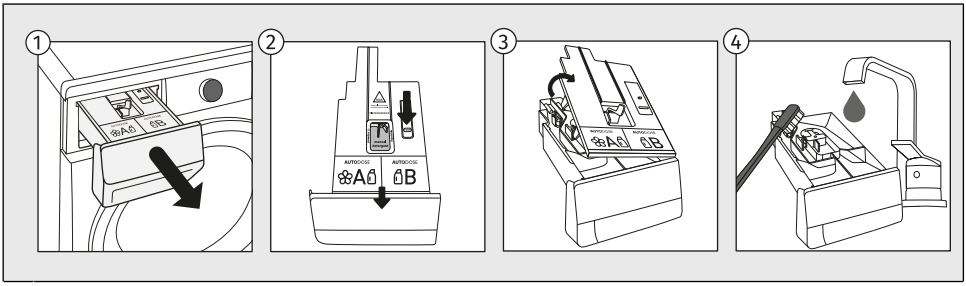

1 To remove the dispenser tray from the housing, press the small tab.

2 Remove the lid of the dosing container by releasing the holder on the back of the dosing container.

3 Clean the dosing container and the lid of the dosing container with a brush under running water, before drying them.

4 Insert the clean and dried dosing container back into the appliance and push it all the way back into the opening.

8.3 Cleaning the water supply hose, detergent dispenser housing, and rubber door gasket

To avoid the buildup of limescale and dirt in parts of the washing machine that come into contact with water and detergent or fabric softener, clean these parts several times. This will extend the life of the washing machine and increase its efficiency. See the chapter below.

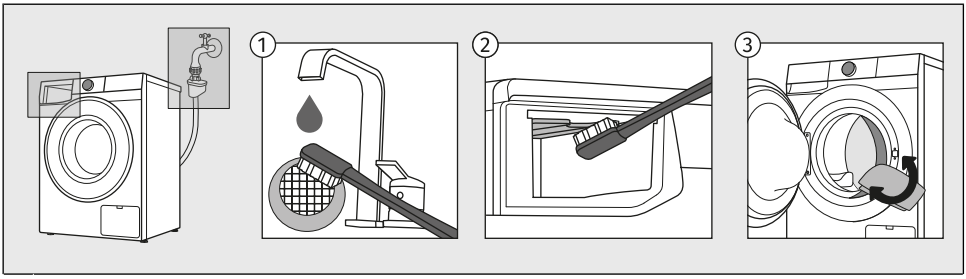

1 Close the water supply, unscrew the water inlet hose and clean the net in the hose connection.

2 Pull out the dosing container and clean the entire rinsing area of the washing machine, especially the nozzles on the upper side of the rinsing compartment, with a brush.

3 After every wash, wipe the rubber door gasket and remove any objects that may have become stuck in the gasket to extend its useful life.

8.4 Cleaning the pump filter

INFORMATION!
During cleaning, some water may be spilled. It is therefore recommended to place an absorbent cloth on the floor.

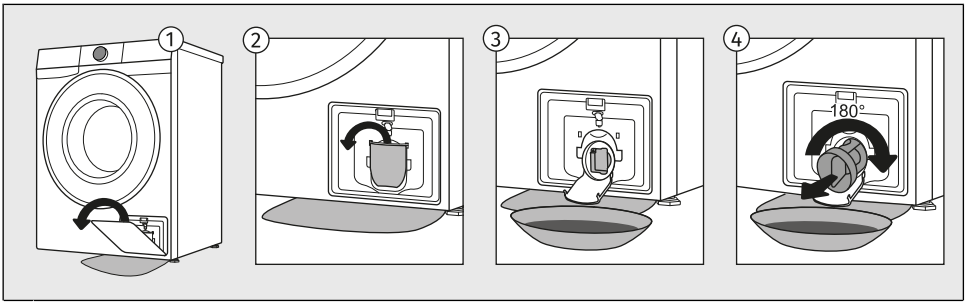

1 Open the filter cover.

2 Open the water outlet funnel before cleaning the pump filter.
Rotate the pump filter slowly in the counter-clockwise direction. Pull out and remove the pump filter to allow the water to slowly drain.

3 Clean the pump filter thoroughly under running water.

4 Remove all objects and impurities from the filter housing and the impeller.
Reinsert the pump filter and screw it in clockwise.
For a good seal, the filter gasket surface should be clean.

INFORMATION!
We recommend regular cleaning of the pump filter once a month. When washing very fleecy, very dirty or old laundry, do it more often.

9. TROUBLESHOOTING AND SERVICING

In this chapter, you will learn:
- how to act in case of malfunctions or problems during washing,
- descriptions of warnings, alerts, and error messages displayed on the screen,
- when and how to contact the service centre,
- what to do in case of a warranty claim and what the warranty covers,
- where to order spare parts.

9.1 What to do in case of problems?

The washing machine shall automatically control the operation of particular functions during the washing cycle. If any irregularity is identified, this will be indicated by reporting (E:XX) on the display. The washing machine will report the error until it is switched off. Disturbances from the environment (e.g. the power grid) may result in various error reports (see the comming chapter).

In such case:

- Switch off the washing machine and wait for a few seconds.
- Switch on the washing machine and repeat the washing programme.
- Most errors during operation can be resolved by the user (see the comming chapter).
- If the error occurs again, call an authorized service unit.
- Repairs may only be carried out by an adequately trained person.

INFORMATION!
Noise and vibration – make sure the appliance is levelled using the adjustable legs and that the jam nuts are securely tightened.

The UKS - stability control system

Unevenly distributed laundry or lumps of laundry in the washing machine drum can cause problems such as vibration and noisy operation. The washing machine detects such problems and the UKS* (*stability control system) will be activated.
Smaller loads (e.g. one towel, one sweater, one bathrobe etc.) or clothes made of materials with special geometrical properties are virtually impossible to distribute evenly across the washing machine drum (slippers, large items etc.). This results in several attempts to redistribute the laundry, which in turn leads to longer programme duration. In extreme cases of unfavourable conditions, the programme can be completed without the spinning cycle.
The UKS* (*stability control system) allows stable operation and a longer washing machine useful life.

The following lists all the errors that the user can see on the user interface.

9.2 Display Message Table

Warnings/information for the user, which can be indicated on the display unit, may include the following:

INFORMATION

AC	***Anticrease* function that you have selected as a part of the washing programme is activated and in progress** The *Anticrease* and End signs will alternate on the display unit. To stop the *Anticrease* function, press the *Start/Pause* ON/OFF button.
0:00 ▷II	**Washing machine standing by, ready to resume the washing programme** On the display, the time remaining until the end of the wash and the *Start/Pause* button flash. To resume the washing programme, press the *Start/Pause* button.
	Preparation for unlocking the door Signal lights will flash on the display unit. Wait for the process to finish. If no errors are shown after the process, a new cycle can be run. Water is being drained. Wait for the door to unlock.
	Displaying the number of completed wash cycles Information about the number of washing cycles performed is displayed on the display for 3 seconds if you unplug the power cord from the power supply (after setting the selector to position *Off*), wait 10 seconds and then plug the power cord back in. After 3 seconds, the appliance switches to standby mode. The number of cycles performed is also available in the user settings menu. See chapter *APPLIANCE SETTINGS AND ADJUSTMENTS / User settings menu / Total number of cycles*.

WARNINGS

CLF	**Water drain system alert** Display of warning CLF. After the washing programme is complete, the signs CLF and End will alternate on the display unit. Alert about reduced water flow in the pumping stage. Check the following: • is the pump filter clean, • is the drain hose clogged, • is the drain clogged, • if the drain hose is placed below the maximum and above the minimum height (see chapter *INSTALLATION AND CONNECTION / Connecting and securing the water discharge hose*).

CLn	**System warning to run the *Ultra clean*** After the washing programme is complete, the signs CLn and End will alternate on the display unit. In case of a CLn warning on the display after washing, proceed as follows: • clean the dosing container, • clean the water supply hose, detergent dispenser, and rubber door gasket, • clean the pump filter (see chapter *CLEANING AND MAINTENANCE*) and • run the self-cleaning program *Ultra clean* (see chapter *Programs on the front panel*). Self-cleaning programme is used to clean the drum and to remove detergent residues and bacteria. The drum must be empty. Do not add detergent or softener! You can add some spirit vinegar (approx. 2 dl) or sodium bicarbonate (1 tablespoon or 15 g) for effective descaling. We recommend that you use the programme at least once a month or whenever the warning appears CLn.
Fd	**Warning by the system for detecting excessive foaming during the washing programme** After the washing programme is complete, the signs Fd and End will alternate on the display unit. In case of excessive foaming in the washing machine or leak of foam through the detergent dispenser tray, the washed laundry has to be rinsed thoroughly with a large amount of water. Choose a washing programme, but do not add any detergent. • We recommend choosing the *Rinse & Softening* programme. • Decrease the amount of detergent added.
PF	**Power supply failure warning (PF** (Power Fail)**)** The system detected a power supply failure during the washing programme progress, which affected functional execution of the washing programme.
PF End	**Power outage notification (PF/End)** Upon completion of the washing cycle, End and PF will alternate on the display unit. This informs the user about a power supply failure and on the effect on the execution of the washing programme. The washing program continues where it was interrupted and then ends successfully.
ULo	**Warning – U:Lo (voltage below 180 V)** A prolonged drop of voltage to below 180 V was detected, which can affect the washing machine operation. Check the power supply network to which your washing machine is connected. **Unresponsive display unit and all buttons** Unplug the power cord from the outlet. Check if the supply voltage is suitable for the washing machine (220–240 V); then, plug the power cord back into the outlet and switch on the washing machine.
UHI	**Warning – U:Hi (voltage over 260 V)** A prolonged voltage surge to over 260 V was detected, which can affect the washing machine operation. Check the power supply network to which your washing machine is connected.

The following lists all the errors that the user can see on the user interface.

GENERAL MALFUNCTIONS

Er 00	**Incorrect settings** Restart the programme. If the error occurs again, contact the service technician, who will guide you through the procedure for confirming the reset.
Er 01	**Temperature sensor error** Inlet water too cold. Repeat the washing program. If the washing machine reports this error again, call a service technician.
Er 02 dor	**Door lock error** Make sure the washing machine door is closed. If you hear an acoustic signal after pressing the *Start/Pause* button, it means that the door of the washing machine is not closed. Close the washing machine door. Unplug the power cord from the outlet; then, plug the power cord back into the outlet and switch on the washing machine. If the error reoccurs call a service technician.

WATER-RELATED MALFUNCTIONS

Er 03	**Water filling error** Check the following: • the suitability of the drain height, • whether the drain hose is secured to the washing machine housing, • is the water inlet valve open, • whether the filter on the inlet hose and on the water valve is clean, • is the water supply hose deformed (clipped, clogged etc.), • is the pressure in the water mains between 0,05 and 1 MPa (0,5–10 bar), • in 30 seconds, min. 0,5 L of water should flow from a fully open tap, Then, press the *Start/Pause* button to resume the program. If the error reoccurs call a service technician.
Er 06	**Water heating error** Restart the program; if the error reoccurs, call a service technician.
Er 07	**Water draining error** Check the following: • is the pump filter clean, • is the drain hose clogged, • is the drain clogged, • if the drain hose is placed below the maximum and above the minimum height (see chapter *INSTALLATION AND CONNECTION / Connecting and securing the water discharge hose*), • whether the pump impeller is not blocked (the impeller must rotate freely); then, press the *Start/Pause* button again. If the error reoccurs call a service technician.
	Excessive amount of detergent Too much detergent may cause excessive foaming in the drum. See description for Fd.

Er 09	**Water leak detected in the washing machine area** Turn off the washing machine and turn it back on. Inspect the exterior of the appliance. If you do not observe any leaks, you can continue to use the washing machine.
Er 10	**Water level sensor error** Unplug the power cord from the socket, wait 10 sec, then plug it back in and switch on the washing machine. Vent the appliance. Do this by draining and cleaning the washing machine filter and cleaning the wall-mounted trap. If the error reoccurs call a service technician.
Er 11	**Water overflow** If there is water in the drum that exceeds a certain level, and an error is reported on the display unit, the washing program will be interrupted and water will be pumped out of the washing machine. Restart the program; if the error reoccurs, call a service technician. If there is water in the drum that exceeds a certain level, and an error is reported on the display unit, while the washing machine continues to add water, close the water tap and call a service technician. **Excessive amount of detergent** Too much detergent may cause excessive foaming in the drum. See description for Fd.

ELECTRICAL SUPPLY MALFUNCTIONS

Er 12.01	**Phase current exceeded** The washing machine detected an exceeded phase current in one of the phases and therefore stopped operation. Disconnect the washing machine from the power supply (unplug the power cord) and wait for 1 minute. In the meantime, check whether the drum is overloaded or unevenly loaded; if necessary, redistribute the laundry or remove some of it. Reconnect the appliance and start the program again. If the error reoccurs call a service technician.
Er 12.4	**Phase current exceeded – operation disabled** Disconnect the washing machine from the power supply (unplug the power cord) and wait for 1 minute. Reconnect the appliance and start the program again. If the error reoccurs call a service technician.
Er 12.5	**Rotor blocked** The motor is unable to rotate, which prevents the program from operating normally. Switch off the washing machine and check whether the drum is mechanically blocked (an object in the drum, a trapped piece of laundry, etc.). Remove the obstruction. Turn the machine back on and start the program. If the error occurs again, the motor or drive assembly may be faulty; call a service technician.

Er 12.8	**Electronics communication failure in the washing machine** Disconnect the washing machine from the power supply (unplug the power cord) and wait for 1 minute. Reconnect the appliance and start the program again. If the error reoccurs call a service technician.
Er 12.12	**Wrong software version** The washing machine has detected a mismatch or invalid software version in one of the modules. A software update or reinstallation is required. Contact an authorized service center.
Er 12.17	**Motor is not connected** The washing machine does not detect a connection between the motor and the control module. Disconnect the washing machine from the power supply (unplug the power cord) and wait for 1 minute. Reconnect the appliance and start the program again. If the error occurs again, the connection to the motor is likely broken; contact a service technician.
Er 13.3	Load detected during the MWC process in the production test (AirDry, Ultra Clean) During the production test, the appliance detected a drum load when it should have been empty. Disconnect the washing machine from the power supply (unplug the power cord) and wait for 1 minute. Meanwhile, remove all items from the drum. Reconnect the appliance and start the program again. If the error reoccurs call a service technician. ** MWC – Motor weight control*
Er 22	**Error while locking the door** The door cannot be locked. The door locking mechanism is not working properly, so the appliance cannot start the programme. Check that the door is properly closed and nothing is blocking the latch. Disconnect the washing machine from the power supply (unplug the power cord) and wait for 1 minute. Reconnect the appliance and start the program again. If the error occurs again, the door lock mechanism or door switch may be faulty; contact a service technician.
Er 23	**Error while unlocking the door** Door is closed, but it cannot be unlocked. Unplug the power cord from the socket, wait 10 sec, then plug it back in and switch on the washing machine. If the error reoccurs, call a service technician. To open the door, see chapter *WASHING PROCESS, STEP BY STEP (1–7) / Adding/removing laundry during the operating of the appliance*.

CONNECTIVITY MALFUNCTIONS

	The appliance cannot be controlled remotely Appliance remote control is not activated or enabled. Check if the Wi-Fi symbol on the appliance is lit, and turn the selector to position Remote control .
	The appliance will not connect to the Wi-Fi network The appliance cannot find your Wi-Fi network. Check whether 2.4 GHz network is activated on your router and whether the Wi-Fi signal at the appliance is strong enough.
Er 48	**Wi-Fi module not detected** The appliance does not recognize the built-in wireless module. Disconnect the washing machine from the power supply (unplug the power cord) and wait for 1 minute. Reconnect the appliance and start the program again. If the error reoccurs call a service technician.

If the problems persist despite observing the advice above, call an authorized service technician.

9.3 Service

When you contact a service centre, please state your washing machine's type, code/ID, model number, and serial number.

Washing machine type, code, model, and serial number can be found on the rating (type) plate on the inner side of the washing machine door.

WARNING!
In case of a failure, only use approved spare parts by authorized manufacturers.

WARNING!
Repair or any warranty claim resulting from incorrect connection or use of the washing machine shall not be covered by the warranty. In such cases, the costs of repair shall be charged to the user.

9.4 Warranty

INFORMATION!
The warranty does not cover consumables, minor deviations in colour, increased noise that results from appliance age and which does not affect the functionality of the appliance, and aesthetic defects on components, which do not affect the functionality and safety of the appliance.
The warranty does not cover the errors or failures resulting from disturbances from the environment (lightning strike, power grid failures, natural disasters etc.).

INFORMATION!
Report any malfunction to your local call centre or web address; all information can be found in the enclosed warranty statement. Contact details of your authorised service centre are available in the warranty statement supplied with the appliance and on the website by scanning the QR code on the rating plate.

INFORMATION!
Some simple faults described in the chapter *TROUBLESHOOTING AND SERVICING / Display Message Table* can be fixed by the user himself by taking into account the instructions without risk to their own safety and without affecting the warranty conditions.

9.5 Spare parts

INFORMATION!
Functional spare parts for the washing machine you purchased will be available for 10 years. During this time, original spare parts will be available to ensure the correct operation of your appliance.
A list of spare parts and repair tips in accordance with the current Ecodesign Directive can be found by scanning the QR code located on the inside of the door of the washing machine. Or on the following link: https://auid.connectlife.io.

10. RECOMMENDATIONS FOR WASHING AND ECONOMIC USE

In this chapter, you will find advice on:
- optimal washing results and how to use detergents and fabric softeners,
- removing limescale to extend the lifespan of your washing machine,
- removing stains before washing laundry,
- recommendations for using detergents.

10.1 Tips for optimal laundry results

Wash new coloured garments separately the first time.

Wash heavily soiled laundry in smaller amounts, with more powder detergent or with a pre-wash cycle.

INFORMATION!

When using the **ADS** system, set the detergent dosing rate to 3 bars .

With slightly soiled laundry, we recommend a programme without a pre-wash cycle, use of shorter programmes (e.g. *Speed 14'*) and a lower washing temperature.

INFORMATION!

When using the **ADS** system, set the detergent dosing rate to 1 bar .
Use this setting also when excessive foaming of detergent occurs.

Apply a special stain remover on stubborn stains before the wash.

Use of chlorine-based bleaches is not recommended as they can damage the heater.

We recommend avoiding washing very small amounts of laundry as this will lead to excessive use of energy and poorer washing machine performance.
You can save energy and water by filling up the washing machine to the capacity specified by the manufacturer for each programme.

INFORMATION!
The following information is accessible via the QR AUID code on the rating plate (see chapter *WASHING MACHINE DESCRIPTION / Technical data*):

- rated capacity in kg;
- duration of the programme in hours and minutes;
- energy consumption in kWh per cycle;
- water consumption;
- maximum temperature reached in the washing machine drum;
- residual moisture content after washing cycle and spinning rate.

At higher spinning rates, there will be less residual moisture in the laundry. As a result, drying in a tumble dryer will be more economical and faster.

Loosen any folded laundry before putting it into the drum.

Detergents

INFORMATION!
Detergents carrying the environment protection label are less harmful to the environment.

Only add the detergents in compliance with the recommendations by detergent manufacturers. Recommended amount of washing detergent at certain loads and water hardness levels are specified on the detergent packaging.

To correctly dose detergents, especially liquid ones, use the accessories provided by the detergent manufacturer.

INFORMATION!
We recommend adding powder detergent immediately before the washing cycle. If you add it sooner, make sure the detergent compartment in the dispenser tray is completely dry before adding the powder detergent: otherwise, the powder detergent may cake before the start of the washing process.

Only use detergents for machine washing.

When using thick liquid laundry care products, we recommend diluting them with water to prevent clogging the dispenser tray drain.
Liquid detergents are intended for washing programmes without a prewash cycle.

You can use all modern detergents intended for household washing machines. The detergent packaging contains instructions for use and dosing, which apply to the maximum amount of filling.

The detergent dosage depends on:

- how heavily soiled the laundry is;
- the amount of laundry and
- water hardness.

Water hardness	Hardness levels			
	°dH (°N)	m mol/l	°fH (°F)	p.p.m.
1 – soft	< 8,4	< 1,5	< 15	< 150
2 – normal	8,4–14	1,5–2,5	15–25	150–250
3 – hard	> 14	> 2,5	> 25	> 250

INFORMATION!
Check the information on water hardness with your local water supply company or authority.

Softeners

INFORMATION!
If you want a more intense softener smell on your laundry, increase the softener dosing rate.

10.2 Prevention and removal of limescale

If you wash at low temperatures and/or with liquid detergents, there is a risk of developing microorganisms and an unpleasant odour in the washing machine. Leave the washing machine door open after each wash to allow the appliance to dry. If you detect an unpleasant odour, run the *Ultra clean* programme.

To prevent and remove limescale deposits only use agents with added anti-corrosion protection. Observe the cleaning agent manufacturer's instructions. To remove limescale deposits, we recommend starting the *Ultra clean* programme. Add spirit vinegar (2 dcl).

If water hardness exceeds 14°dH, water softener should be used. Heater damage resulting from incorrect use of water softeners shall not be covered by the warranty. Check the information on water hardness with your local water supply company or authority.

10.3 Stain removal tips

Before using special-purpose stain removers, try using the natural methods that do not harm the environment on less stubborn stains.

However, prompt action is required! Soak the stain with an absorbent sponge or a paper towel; then, rinse with cold (lukewarm) water – but never with hot water!

When using bleaches or stain removal agents, there is danger of rust (corrosion) and discolouration.

WARNING!
To protect the environment, we advise against using powerful chemicals.

Stains	Stain removal
Mud	When the stain is dry, first scrape it off the garment before washing it in the washing machine. If the stain is stubborn, soak it with an enzyme-based stain remover before the wash. If the stain is not stubborn, wash the laundry with liquid detergent or powder detergent and water before the wash.
Antiperspirant	Before washing in the washing machine, apply liquid detergent onto the laundry. Apply stain removers on any stubborn stains. Alternatively, use oxygen-based bleach for the wash.
Tea	Soak or rinse the laundry in cold water and add stain remover if necessary.
Chocolate	Soak or rinse the laundry with lukewarm soapy water. Then, apply lemon juice and rinse.
Ink	Before washing in the washing machine, apply stain removers on the stain. You may also use denatured alcohol. Turn the garment inside out and place a paper towel under the stain. Use the alcohol on the back side of the stain. At the end of the pro-cess, thoroughly rinse the garment.
Felt tip pens	Dilute some starch in water and apply it to the stain. When it dries, scrape it off with a brush; then, wash the garment in the washing machine.
Baby clothes (urine, mud, food stains)	Before washing in the washing machine, soak the stains in lukewarm water for at least half an hour. For easier stain re-moval, add an enzyme-based stain remover.
Grass	Before washing in the washing machine, soak the laundry in an enzyme-based stain remover. Grass stains can also be re-moved by soaking (for approx. 1 hour) in diluted lemon juice or distilled vinegar.
Eggs	Soak the garment in an enzyme-based stain remover. Soak in cold water for at least 30 minutes or a few hours if the stains are stubborn. Then, wash in the washing machine.
Coffee	Soak the garment in salt water. If the stain is not fresh, soak it with a mixture of glycerine, ammonia and alcohol.
Shoe polish	Apply cooking oil to the stain and rinse.
Blood	Fresh stain – rinse the garment with cool water and wash it in the washing machine. Dried stain – soak the garment in an enzyme-based stain remover. Then, wash in the washing machine. If the stain does not vanish, try to remove it with a bleach suitable for your garment.

Stains	Stain removal
Glue, chewing gum	Place the garment in a bag and put it in the freezer until the stain hardens. Then, remove it with a blunt knife. Then, dilute the stain with a prewash stain remover and rinse thoroughly. Then, wash the laundry as usual.
Makeup	Use a stain remover for the prewash; then, wash in the washing machine.
Butter	Before washing in the washing machine, apply stain remover to the stain. Then, rinse with hot water (as hot as the fabric will al-low).
Milk	Soak the garment in an enzyme-based stain remover. Soak for at least 30 minutes or a few hours if the stains are stubborn. Then, wash in the washing machine.
Fruit juice	Apply a mixture of salt and water on the stain. Leave to take effect for a while, then rinse. You can apply sodium bicarbonate, distilled vinegar or lemon juice on the stain before washing in the washing machine. For old stains, use glycerine. After 20 minutes, rinse with cold water, then wash the laundry in the washing machine.
Wine	Soak the laundry in cold water for at least 30 minutes. Also, use a stain remover. Then, wash in the washing machine.
Wax	Put the garment into the freezer until the wax hardens. Then, scrape it off. Remove the remaining wax by placing a paper towel onto the stain, and then heat it with an iron until the paper absorbs the wax.
Sweat	Before washing in the washing machine, rub liquid detergent thoroughly into the stain.

11. CONSUMPTION VALUES

INFORMATION!
The provided information is in accordance with EU Regulation 2019/2023. The values indicated for programmes other than Eco 40-60 have been determined in accordance with the applicable standard EN60456.

Explanation of symbols used below:

- Energy efficiency class
- Maximum temperature (°C)
- Rated capacity (kg)
- Programme duration (h:min) (1)
- Energy consumption (kWh per cycle) (1)
- Water consumption (L per cycle) (1)
- Maximum temperature (°C) 5 min (1)
- Remaining moisture content (%) (1)
- Spin speed (rpm) (1)

54 cm / 9 kg:

Program									
i **Eco 40-60**	**A**	**40-60**	9 kg	03:30	0,800	61	31	53	1320
			4,5 kg	02:50	0,230	48	22		1400
			2,5 kg	02:35	0,200	25	24		1400
ii **Cotton White** (20°C)		**20**	9 kg	03:46	0,31	96	20	54	1400
Cotton White (40°C)		**40**	9 kg	04:48	1,42	98	43	54	1400
iii **Cotton White** (60°C)		**60**	9 kg	04:28	2,21	108	63	54	1400
iv **Mix/Syntetics** (30°C)		30	3,5 kg	02:45	0,52	57	32	31	1200
v **Speed 14'** (30°C)		30	1 kg	00:14	0,10	16	30	63	1000
vi **Cotton White** (90°C)		**90**	9 kg	04:28	3,16	113	85	54	1400

i *the eco 40-60 programme at the rated capacity, half of the rated capacity and a quarter of the rated capacity;*
ii *the 20 °C programme at the rated capacity for this programme;*
iii *one cotton programme at nominal temperature higher than or equal to 60 °C (if present) at the rated capacity for this programme;*
iv *one programme for other textiles than cotton or a mix of textiles (if present) at the rated capacity for this programme;*
v *one programme for the quick washing of lightly soiled laundry (if present) at the rated capacity for this programme;*
vi *one programme for heavily soiled textiles (if present) at the rated capacity for this programme;*

(1) *Due to the influence of water pressure, hardness, and inlet temperature, the type, quantity, and soiling of the laundry, the detergent used, power supply, and selected functions, the actual values may differ from the specified values.*

(2) *Test program with cold water (15°C) in accordance with the EU Directive on Eco-design and the EU Regulation on Energy Labeling.*

(3) *Washing machine type, code, model, and serial number can be found on the rating (type) plate on the inner side of the washing machine door.*

FL *Full load*

HL *Half load (Half Load)*

QL *Quarter load (Quarter Load)*

gorenje

GORENJE gospodinjski aparati, d.o.o. Address: Partizanska 12, 3320 Velenje, Slovenia
Phone: +386 (0)3 899 10 00 Fax: +386 (0)3 899 28 00 www.gorenje.com

PS26/66144 GOR en963431

963431-a2

We reserve the right to any changes and errors in the instructions for use.