YPOO

USER MANUAL

X5 EXERCISE BIKE

Model: BC720



IMPORTANT!

Please read all details before use, and keep this user manual for future reference.

PLEASE CONTACT US BEFORE THE RETURN

Contents

01.SAFETY INSTRUCTIONS ---------- 01

02.PRODUCT INTRODUCTION ---------- 04

03.ASSEMBLY INSTRUCTIONS ---------- 07

04.INSTRUCTIONS ON PRODUCT USAGE ---------- 17

05.MONITOR INSTRUCTIONS ---------- 21

06.WARRANTY ---------- 22

07.WORKOUT GUIDE ---------- 23

08.APP CONTROL ---------- 24

Customer Service

Thank You for Your Purchase!

If you encounter any issues such as damaged or defective products, need replacement parts, or require any other support, please contact our customer service team using the following methods:

support@ypoofitness.com

12 Hours

+44 1797 905007

To receive the quickest response, especially during peak business hours, emailing us with your Order ID and Description of Parts (Adding photos or videos would be helpful) is the best method.

Important:

Please do not return this product and Description of Parts without first contacting our customer service.

Download and use of YPOOFIT

1. To download the YPOOFIT app, scan the QR code or search "YPOOFIT" in the Apple App Store or Google Play Store.

YPOOFIT APP Download

APP Connection Guide

2. Open the YPOOFIT app. Log In or Sign Up.
3. Please note: If your phone is Apple - iPhone, please refer to the path: Profile > Settings>Language after login to switch the desired language.
4. Follow the in-app instructions to set up your device.

01. Safety Instructions

⚠ TO REDUCE THE RISK OF INJURY, PLEASE READ INSTRUCTIONS IN FULL BEFORE USE

⚠ WARNING

Keep young children away from this machine at all times. Contact with the moving surface may result in severe friction burns

1. Please set the training equipment in a spacious, hard, flat and stable place to use, and lay a protective layer on the floor or carpet to prevent damage to the ground. Make sure the distance between the machine and each obstacle is at least **2.0 ft (0.6m)**.

2. This product is intended for adult healthy people. People with hypertension, heart disease, respiratory disease, lumbar disease, pregnant women and people with mobility disorders should consult a doctor before training. In addition to the above, do not use it when you are unwell.

3. This product is a household H product, not a medical fitness equipment, and is not suitable for rehabilitation and medical use.

4. Before each use, please check whether the main engine, pedals, seat cushion, handlebars, brakes, fixing knob and other parts of the bike are firmly fixed.Pay special attention to components most susceptible to wear (e.g.: belt, saddle). If there is loosening or damage, stop using immediately and repair or replace them.

5. Please wear comfortable and breathable sports clothes, sports shoes and tight rubber gloves to avoid wearing too loose or tight clothes for the risk of clothing entanglement. Do not use this product barefoot or in sandals.

01. Safety Instructions

6. Make sure the seat height and front/back position, as well as the handlebar height and distance are suitable for your height and riding habits. This helps reduce unnecessary body stress and avoid sports injuries.

7. Please ensure that the bike is placed on a stable ground and check whether all parts of the equipment are stable and loose. During the ride, avoid sudden changes in direction or strenuous movements to prevent falls or damage to the equipment.

8. During the process of cycling training, we should always pay attention to our body's reaction. If you feel discomfort or pain, you should stop the training immediately and seek help. Do not ignore the warning signals of the body, so as to avoid causing more serious injuries.

9. If you feel dizziness, chest pain or other physical abnormalities (headache, dizziness, nausea, chest tightness, cold sweat, severe joint and muscle pain, etc.) during or after using this product, please stop training immediately and receive professional medical diagnosis.

10. Please do not keep it in the place where the sun is shining, where the wind and rain are, or where the humidity is too high. Also, please pack it as needed. Children are strictly prohibited from touching or playing with this product.

11. When using this equipment, the foot should be fixed in the pedal and the strap should be adjusted to bind the foot tightly to prevent accidental movement of the foot which may cause injury.

01. Safety Instructions

12.Adjust the handle and seat position according to your height requirements. Do not adjust beyond the "MAX" or "STOP" line. After adjustment, make sure that the adjustment knob is locked.

13.Do not put any object or body part into any opening of the bike.

14.During training, you need to wait for the inertia wheel and pedal to stop turning before you can get off the car or press the emergency brake handle. If you do not comply, you may lose control and cause danger.

15.For riding safety, the normal use range does not exceed 22km/h.

16.Only trained personnel should replace the device's battery.

⚠ DANGER

- This machine is only for home use.Do not EXCEED MAXIMUM WEIGHT CAPACITY,the machine will be damaged and accidents will occur.
- Do not modify this product or use non-original parts without authorization. Do not open the case without professional personnel to avoid damage to the equipment.
- Exercise bikes have a flywheel, so pay attention to the inertia wheel and pedal may cause harm to the human body.
- Please do not use this product in areas with infants, pets, small and crowded areas, or obstacles.

02. Product Introduction

A. LED Display
B. Handlebars
C. Handlebar Post
D. Emergency Brake
E. Handlebar Height L-shape Pin Knob
F. Water Bottle Holders
G. Bike Frame
H. Wheels
I. Front Stabilizer
J. Rear Stabilizer
K. Pedals
L. Handle Knob
M. Adjusting Foot Pad
N. Seat Height L-shape Pin Knob
O. Dumbbell Rack
P. Seat Adjustment Knob
Q. Seat
R. Ipad Holder
S. Seat Post

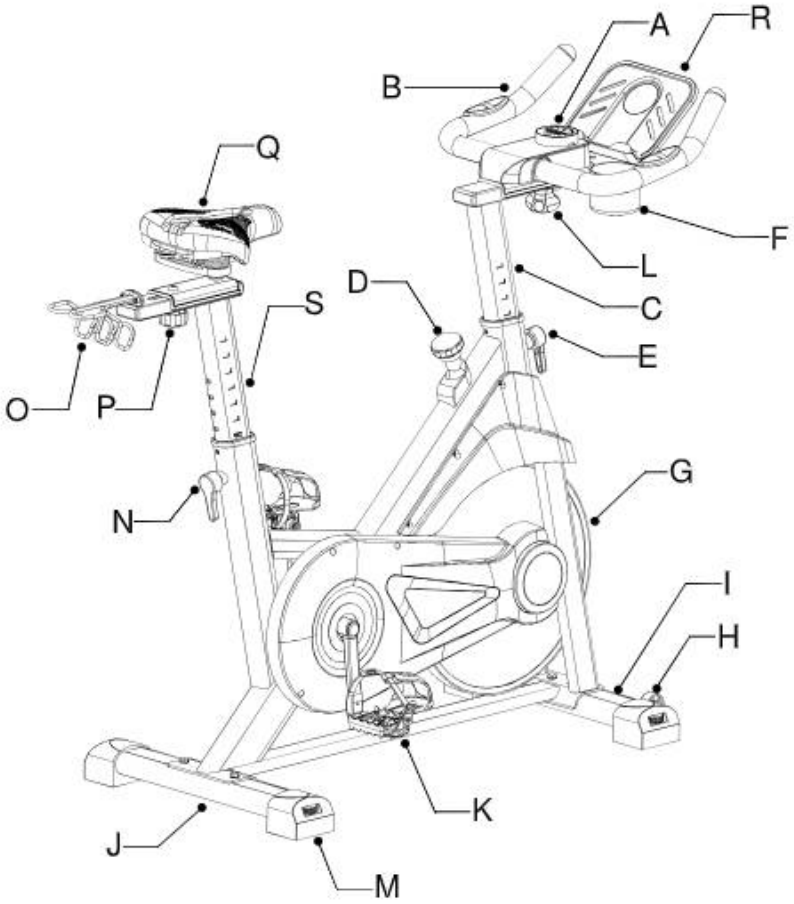

Part List

G. Bike Frame

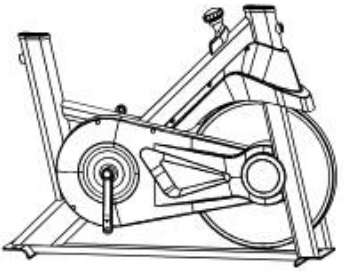

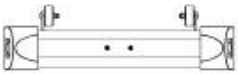

I. Front Stabilizer



J. Rear Stabilizer



C.Handlebar Post



F.Bottle Holders

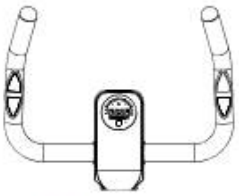

B.Handlebars



R.Ipad Holder



O.Dumbbell Rack

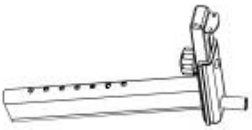

S.Seat Post



K.Pedals*2



Q.Seat



Tool Kit



Batteries



Instruction Manual

Tool Kit

Quotation Marks	Quantity	Specifications
①	1	Screwdriver
②	1	#13-#15 Open Wrench
③	1	Hex Wrench

①  ②  ③ 

Quotation Marks	Quantity	Specifications
ⓐ Button Head Hex Socket Bolt	**2PCS**	M6x8
ⓑ Cross-head Screws	**3PCS**	ST4.2x10
ⓒ Flat Washer	**3PCS**	ø4.2xø16
ⓓ Button Head Hex Socket Bolt	**2PCS**	M6x12

ⓐ  ⓑ 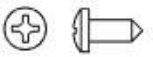 ⓒ 

ⓓ 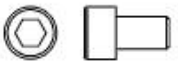

03. Assembly Instructions

Note: Make sure you have the correct stabilizer. The front stabilizer has wheels and the rear stabilizer does not.

Step 1: Install Front and Rear Stabilizer

Locate Bike Frame(G),Front Stabilizer(I) and Rear Stabilizer(J) from the package. Take out 13#Open Wrench(②)from tool kit.

(I) Front Stabilizer: Use the Tool ②13# to remove the pre-installed hex bolts (ⓔ*2) and washers (ⓕ*2) from the front stabilizer (I).
Place the Front Stabilizer(I) and align it with the fixing holes on the Bike Frame. Use Tool ②13# to reinstall the removed (ⓔ *2) and (ⓕ *2) onto the frame, then tighten the Front Stabilizer.

(J) Rear Stabilizer: Using the same method,use the 13#Open Wrench to remove the pre-installed Hex Bolts(ⓔ*2) and washers(ⓕ*2) on rear stabilizer(J) .
Secure the rear stabilizer to the bike frame using the removed ⓔ and ⓕ, and tighten them with②13#.

Make sure all bolts are tight before moving to the next step. Remove the pre-installed screws

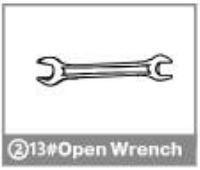



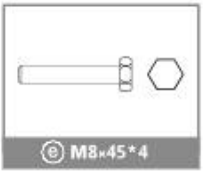

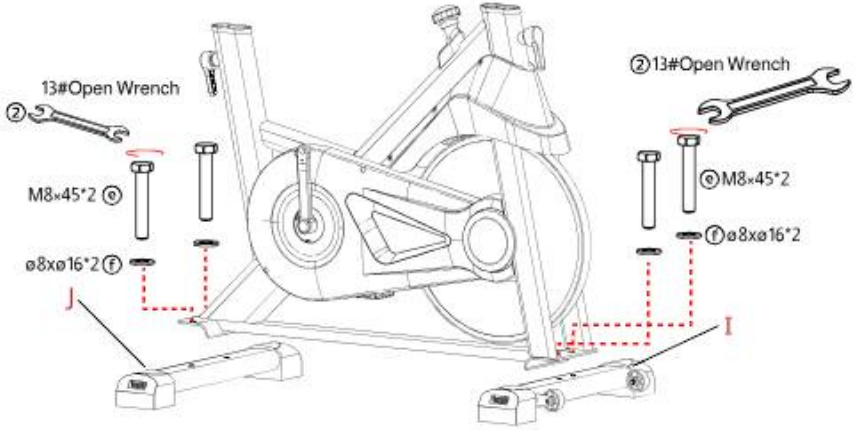

03. Assembly Instructions

Step 2: Install the Pedals

Locate the Left/Right Pedal(K)and 15#Open Wrench(②) in the package

L: Install the left pedal into the left crank threaded hole. Hand-tighten it by rotating **counterclockwise** as shown in the figure(**toward the flywheel**), then secure it with Tool ②15#Open Wrench.

R: Install the Right pedal in the same way. Hand-tighten it by rotating **clockwise** as shown in the figure, then secure it with ②15#Open Wrench.

Note that the direction of tightening is all toward the flywheel.

tighten the pedals securely to avoid noise.



K.Pedals*2



②15#Open Wrench

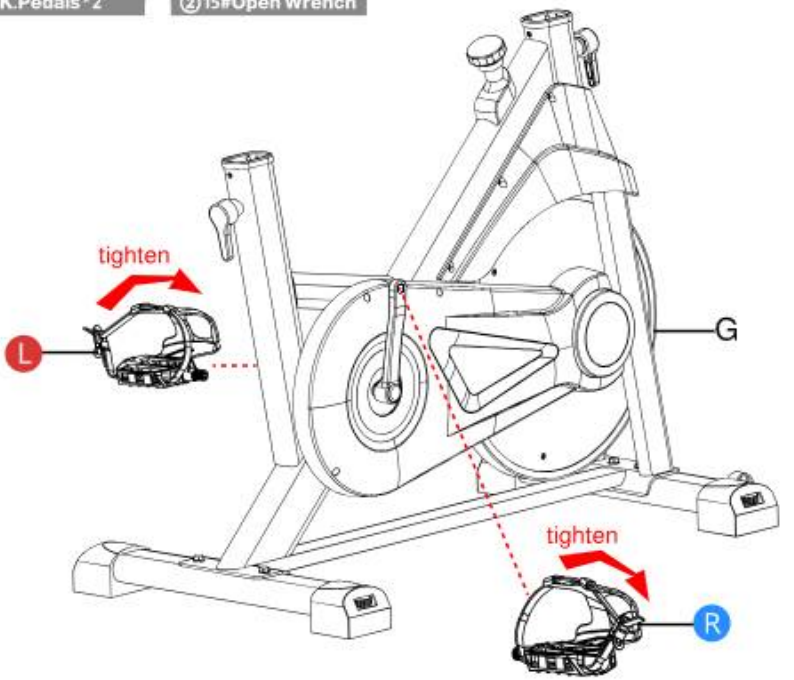

03. Assembly Instructions

Step 3: Install Seat Post

Locate the Seat Post(S) in the package.

FigureA

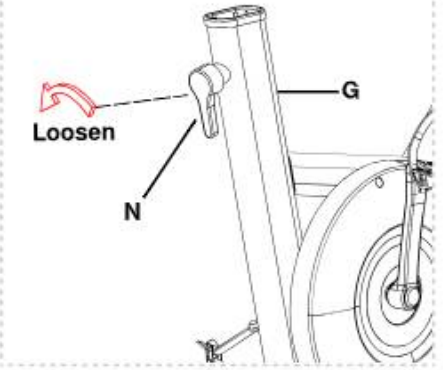

Rotate the Seat Height L-shape Pin Knob(N) counterclockwise to loosen it. **(Figure A)**

FigureB

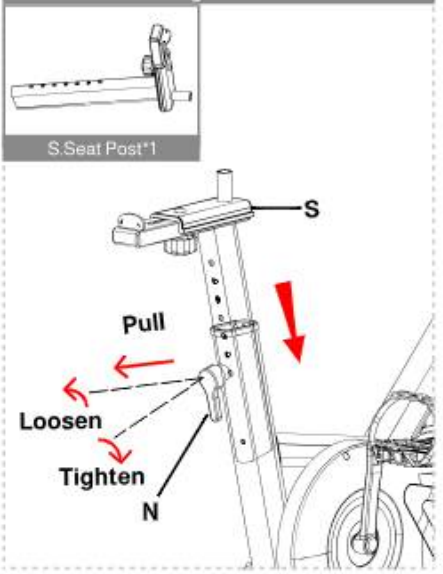

Hold the knob(N) handle with one hand and pull it outward,and insert the Seat Post(S) into the Bike Frame with the other hand. Adjust to the desired height, release the N to lock the Seat Post (until a "click" sound is heard), then tighten the N clockwise. **(Figure B)**

03. Assembly Instructions

Step 4: Install the seat and dumbbell rack

Locate the Seat(Q) and Dumbbell Rack(O) in the package. Take out Button Head Hex Socket Bolt M6*8 (ⓐ)x2, Hex Wrench(③), and #13 Open Wrench (②) from tool kit.

FigureA

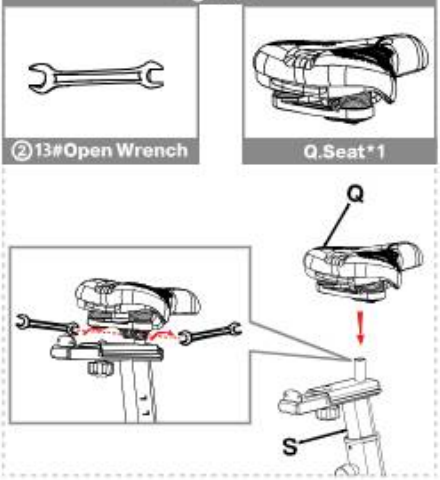

Insert the seat(Q) into the Seat Post (S)according to the direction of the arrow.Then lock the nuts on bothsides of the seat by Tool ②13#.
Makesure the front of the seat is facing straight forward when tightening. **(FigureA)**

Tighten the nuts securely to avoid seat loosening.

FigureB

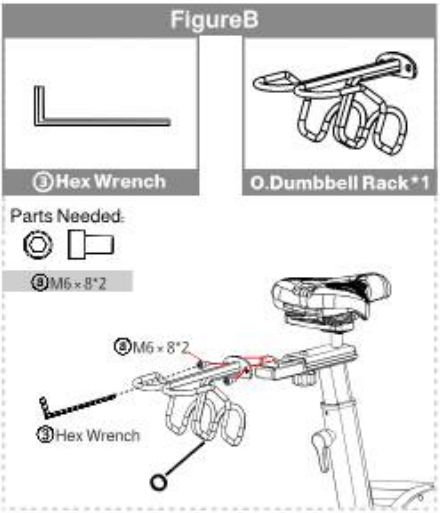

Place dumbbell rack (O) on seat post as shown, ensure the holes are aligned,then secure it using a hex wrench(③) and Button Head Hex Socket Bolt(ⓐ) x 2. **(Figure B)**

03. Assembly Instructions

Step 5: Install the Handlebar Post

Take out the handlebar post(C) from the package. There is a white wire(g) inside the handlebar post. One end of it is exposed from the top and wrapped around the handlebar post, while the other end is exposed from the bottom. Meamwhile, the FRAME Cable(a) inside the Bike Frame(G) also has a white wire.

Do not pull the white wire out of the handlebar post first!

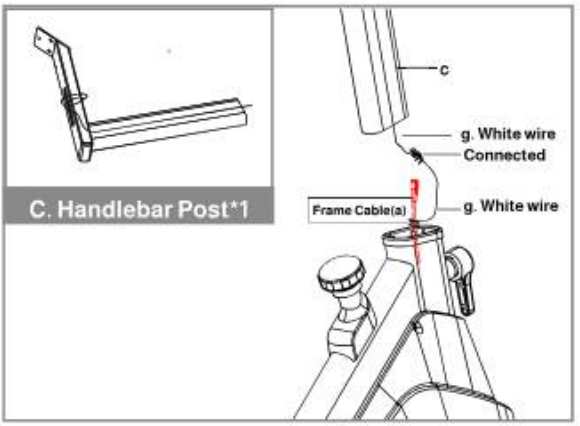

1. Connect the (g) at the bottom of the Handlebar post to the (g) on the frame cable. (Ensure the connection is secure; otherwise, the frame cable cannot be pulled out of the Handlebar post due to looseness.

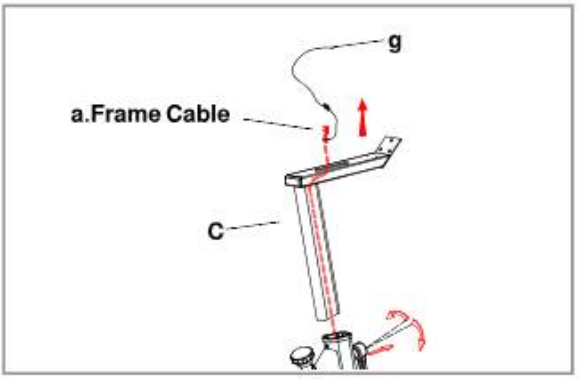

2. Untie and gently pull the white wire(g) at the handlebar top to draw the frame cable through the handlebar tube until it exits the top.Do not remove the white wire; set it aside.

03. Assembly Instructions

3. Loosen the Handlebar Height L-shape Pin Knob(E) counterclockwise,Hold and pull the Pin Knob(E) outward. Insert the handlebar post(C) with the threaded frame cable into the frame, adjust it to a proper position, then release the E. Once a "click" sound is heard, it will lock into place—finally, tighten the Pin Knob(E) clockwise.

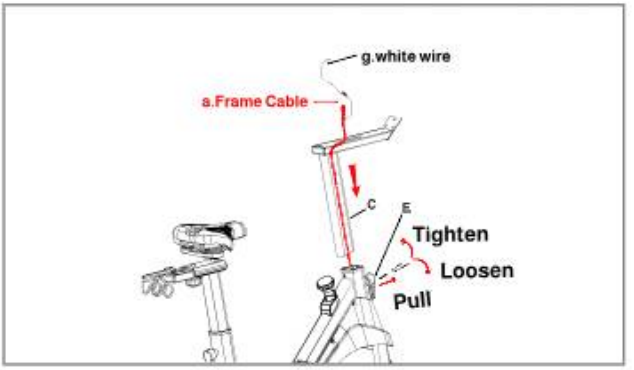

If the white wire (g) is accidentally pulled out

* If the wire inside the handlebar post (C) bounces back or comes out completely during installation, follow these steps:

a. Straighten the long white wire (g).
b. Insert the white wire (g) through the top opening of the handlebar post (C) (as shown in the Figure A), then push it downward until it comes out from the bottom.
c. Then restart from Step 1.

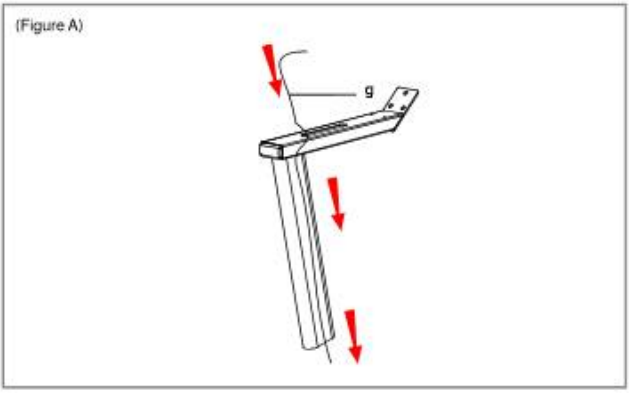

03. Assembly Instructions

Step 6: Install Handlebar

Locate the Handlebar(B) in the package and remove the pre-installed Handle Knob(L) and flat washer(h).

Connect the display cable(f) inside the handlebar to the frame cable(a), then tuck the connected cables into the Handlebar Post port.
Place Handlebar (B) on Handlebar Post (C), ensure proper alignment, and secure it to the handlebar tube using the Handle Knob with the flat washer.


L. Handle Knob*1

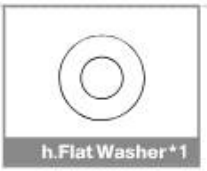
h.Flat Washer*1


B.Handlebars*1

03. Assembly Instructions

Step 7: Install the Bottle Holder and Ipad Holder

Remove the tablet holder and cup holder from the packaging. Then, take out the Button Head Hex Socket Bolts (ⓓ) *2, cross-head screws(ⓑ)*3 and flat washers(ⓒ)*3,Screwdriver(①) and Hex Wrench (③)from tool kit

1.Align the bottle holder(F) with the holes in the handlebar post(C),and use Hex Wrench to tighten the Button Head Hex Socket Bolts(ⓓ) *2 to secure the F.

2.Align the Ipad Holder(R) with the holes in the handlebar post(C),and use a screwdriver to tighten the cross-head screws(ⓑ)*3 with flat washers(ⓒ) to secure the R.

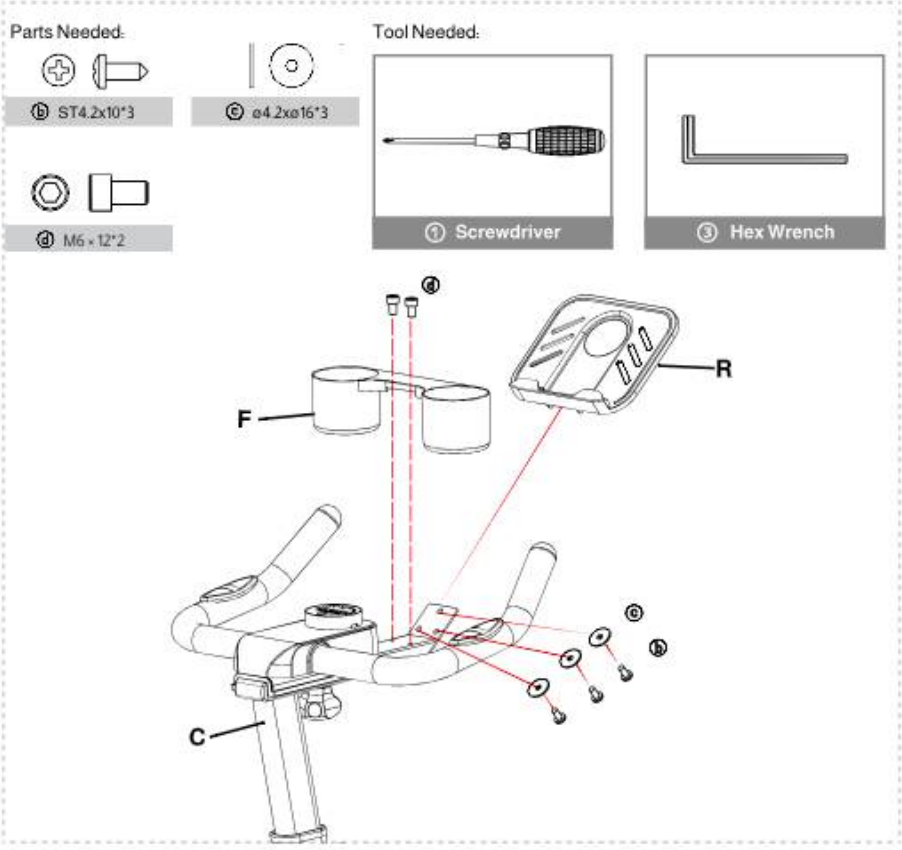

03. Assembly Instructions

Monitor Screen Removal Guide

Place your hands on the concave areas on both sides of the screen, press firmly and lift the display upward at the same time to separate it from the base.

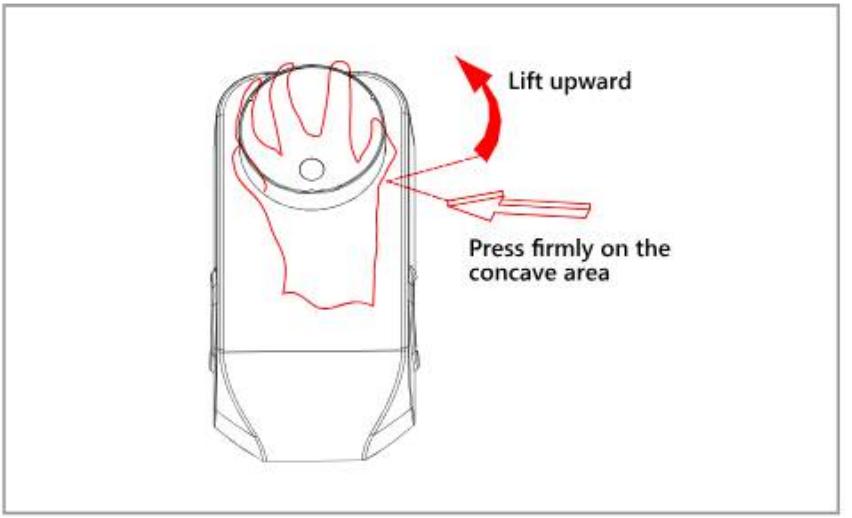

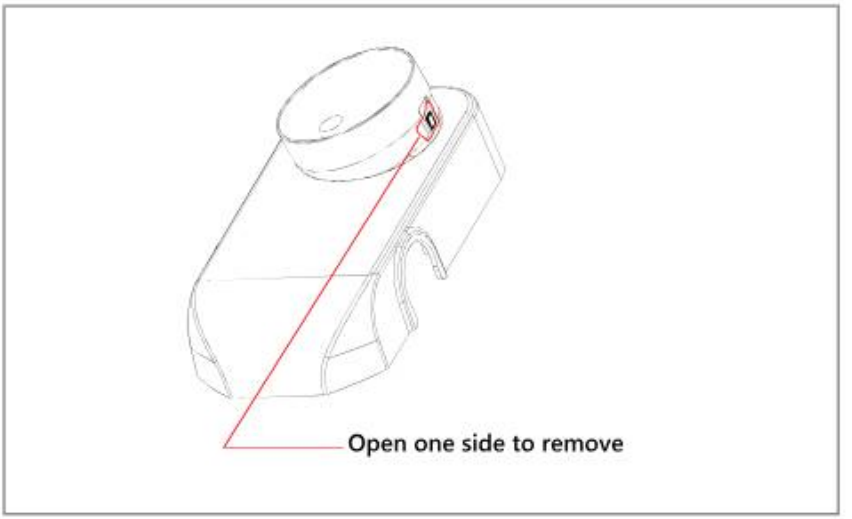

03. Assembly Instructions

Step 8: Install Batteries

Take out two AAA batteries from the package.

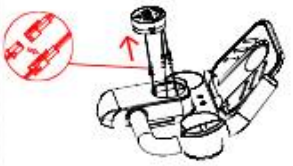

(Figure A)

1. Press your hands on the concave surfaces on both sides of the display screen, then gently pull the Signal Wire outward to remove the display.(Figure A)

Note: If the signal wire comes loose during operation, reconnect it.

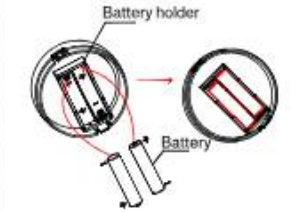

(Figure B)

2. Flip the display screen over. Use the battery included in the package and install them correctly according to the (+/-) polarity markings on the display's battery compartment. (Figure B)

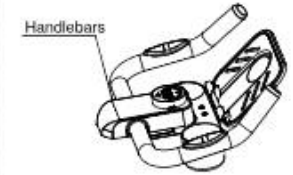

(Figure C)

3. After placing the batteries in and installing them properly, put the display screen back in its original position on the Handlebars and secure it.(Figure C)

Note: When the battery power is exhausted, replace them in the same way. During operation, pull out the signal wire gently to prevent it from loosening.
Battery Specification : 1.5V AAA (2PCS)

04. Instructions On Product Usage

Seat Adjustment

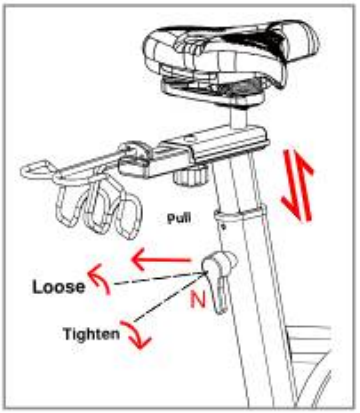

Seat Height Adjustment

As indicated by the arrow, loosen the Seat Height L-shape Pin Knob (N) with one hand and pull it outward. Grab the cushlon with other hand, and pull it up (or down). After adjusting to the desired position, release (N) to lock the Seat Post (until a "click" sound is heard), then tighten the Pin Knob by turning it clockwise.



Seat Front-Back Adjustment

Rotate the seat adjustment knob counterclockwise to loosen it. Slide the seat forward or backward to the desired position, then tighten the knob securely.

04. Instructions On Product Usage

Handlebars adjustment

You can adjust the handrail height according to your stature. The adjustment method is consistent with that of the seat.

Height Adjustment

Rotate the L-shape Pin Knob counterclockwise to loosen and pull it outward. Move the handrail column up or down to the desired position. Align the Pin Knob with the corresponding hole on the column, then tighten by turning clockwise.

Front-Back Adjustment

Rotate the handrail knob clockwise to loosen. Slide the handrail forward or backward to the preferred position, then secure by turning the knob counterclockwise to tighten.

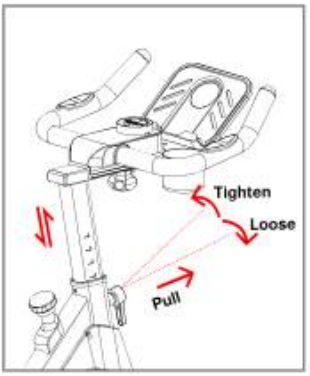



Adjustment of Foot pads

If the Bike wobbles slightly during use, please adjust these 4 foot pads. Rotate to adjust (raise or lower) them to keep the Bike level, and do not use it until the wobble stops.

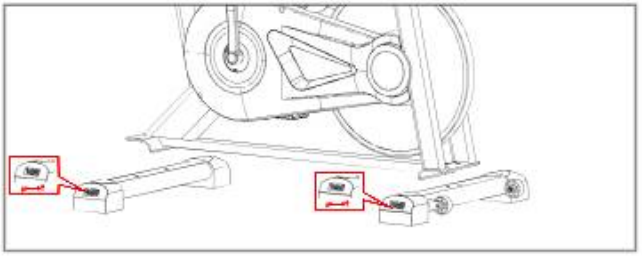

04. Instructions On Product Usage

Brake Instructions

Emergency Stop

The flywheel and pedals are linked. Never dismount or remove your feet while the pedals are rotating. To stop (normal or emergency), firmly press and hold the brake knob down until the bike fully stops.

How to Use Your Brakes

1.**For Long-Term Inactivity:**

To prevent the pedals from rotating and potentially harming children, turn the brake knob clockwise to increase resistance. Continue turning until the pedals come to a complete stop.

2.**To Resume Exercise:**

Turn the knob counterclockwise to reduce the resistance to your desired level before starting your workout.

The pedal resistance can be increased or decreased by rotating the brake knob.

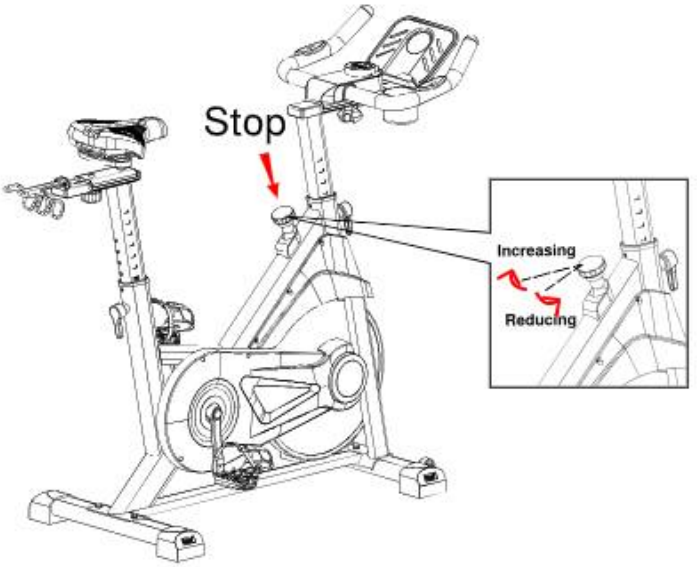

04. Instructions On Product Usage

How to Move the Exercise Bike

Firmly grip the handlebars and push downward until the transport wheels on the front stabilizer make full contact with the ground and the rear stabilizer lift off the floor. Maintain a stable tilt angle while slowly moving the bike.

Additional Tips for Female and Elderly Users:

You can place one foot on the front stabilizer tube to secure it, then push down on the handlebars. This method makes it easier to ground the front wheels and lift the rear section with less effort.

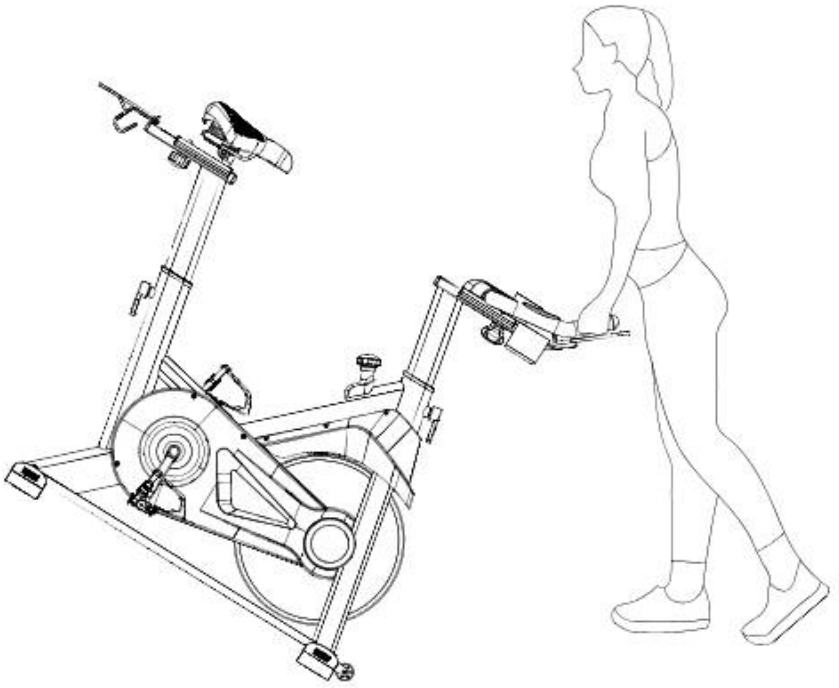

05. Monitor Instructions



MODE

Monitor Instructions

1.Button Operation

MODE (Mode Button):

* Short press to switch between functions: Time, Speed, Distance, Calorie, and Pulse .
* Long press for 3 seconds to reset all data .

2.Function Display

To view a specific function, press the **MODE** button until its corresponding symbol appears on the LED screen.

- **SCAN**:Displayed as "**SCAN**."Shows the carousel mode is activated, data will switch at 3-second intervals.(Time<Speed<Distance<Calorie< Pulse)
- **TIME**: Displayed as "**TIME**." Shows your current exercise duration.
- **SPEED**: Displayed as "**SPD**." Shows your current speed.
- **DISTANCE**: Displayed as "**DIST**." Shows the total distance covered.
- **CALORIE**: Displayed as "**CAL**." Shows the estimated calories burned.
- **PULSE**: Displayed as "**PULSE**." Shows your current heart rate.

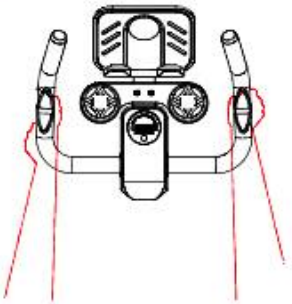

3. How to Measure Your Pulse

* Press the MODE button until the "**PULSE**" symbol appears on the screen.
* For the contact pulse sensor, place your palms on the contact pads first before measuring your pulse rate .

Auto Shutdown:
When the device detects no speed signal, it will automatically enter pause mode and retain the current exercise data for 3 minutes. After this period, it will switch to standby mode. If there is no operation in standby mode, the screen will turn off automatically after another 3 minutes. Press the MODE button or resume exercise to wake it up. (No data is available)

Abnormal Display:
If the screen shows abnormal information, try removing and reinstalling the batteries to troubleshoot.

06. Warranty

MANUFACTURER'S LIMITED WARRANTY

We warrants to the original purchaser that this product is free from defects in material and workman-ship when used for the purpose intended,under the conditions that it has been installed and operated in accordance with owner's.

COMPONENT LENGTH OF WARRANTY

Structural Frame 1 year For Home Use Only.

All Other Components 90 days For Home Use Only.

Exclusions from Warranty Coverage:

ypoo does not warrant against and is not responsible for, and no implied warranty shall be deemed to cover, any product failure,product malfunction,or damages attributable to:

1. Improper installation or failure to follow installation guidelines.
2. Use beyond normal home use or in inappropriate applications.
3. Cosmetic issues like scratches, dents, or discolorations.
4. Damage from normal wear and tear, vandalism, accidents, or animals.
5. Acts of nature (fire, flooding, snow, ice, hurricanes, earthquakes, lightning), environmental conditions (pollution, mold, mildew), or staining from foreign substances (dirt, grease, oil).

07. Workout Guide

This routine helps improve flexibility and reduce muscle tension. Remember toperform each stretch gently and avoid bouncing or pushing too hard.



1. Stretch down:

Stand with feet shoulder-width apart, bend knees slightly, and slowly stretch downward to touch Hold for 10-15 seconds and repeat 3 times per leg.



2. Hamstring stretch:

Sit with one leg straight and the other bent inward, reaching towards the toes of the straightened leg.
Hold for 10-15 seconds and repeat 3 times per leg.



3. Calf and achilles stretch:

Stand with one foot behind the other, hands on a wall, and lean forward, keeping back leg straight and heels on the ground.
Hold for 10-15 seconds and repeat 3 times per leg.



4. Quadriceps Stretch:

Stand with one hand on a wall for balance, reach back with the other hand to pull your heeltowards your hips, feeling the stretch in your thigh.
Hold for 10-15 seconds and repeatseveral times per leg.



5. Inner thigh stretch:

Sit with the soles of your feet together and knees outward, pulling your feet gently towards your groin.
Hold for 10-15 seconds and repeat 3 times.

08. App Control



Note: System require-ments:
ios13 or above ; android 6.0 or above.







Exercise Bike supports connection to mobilephone via Bluetooth

- Download YPOOFIT app on your phone and install it Search for YPOOFIT in the app store or scan the following QR code to download and install the app.
- Configure YPOOFIT app account Open YPOOFIT app and follow the app instruc-tions to log in or register account informa-tion.
- Connect the Exercise Bike

1. Turn on the Bluetooth function ofthe mobile phone (the android mobile phone also needs to turn on the positioning function).
2. Open the YPOOFIT app (if the app prompts for authorization, please grant the apprel-ated permissions).
3. Enter the app home page, click the Add Device in the upper left corner of the home page to enter the search interface.

After the Exercise Bike makes a beep, the connection is successful.
Note: Please make sure your phone is connected to the internet when connecting the Exercise Bike via Bluetooth.
Please refer to the App description for detailed networking configuration.