

TSL-2e 200kg Hydraulic Scissor Lift Trolley

User Manual

[Revision 1.0]

READ THIS MANUAL CAREFULLY BEFORE USE – FAILURE TO DO SO MAY RESULT IN INJURY, PROPERTY DAMAGE AND MAY VOID WARRANTY. • KEEP THIS MANUAL FOR FUTURE REFERENCE. • Products covered by this manual may vary in appearance, assembly, inclusions, specifications, description, and packaging.

Safety

Safety messages are designed to alert you to possible dangers or hazards that could cause death, injury or equipment or property damage if not understood or followed. Safety messages have the following symbols:



You WILL be KILLED or SERIOUSLY INJURED if you do not follow instructions.



You CAN be KILLED or SERIOUSLY INJURED if you do not follow instructions.



You CAN be INJURED if you do not follow instructions or equipment damage may occur.

It is vital that you read and understand this user manual before using the product, including safety warnings, and any assembly and operating instructions. Keep the manual for future reference.

Safety precautions and recommendations detailed here must be fully understood and followed to reduce the risk of injury, fire, explosion, electrical hazard, and/or property damage.

Safety information presented here is generic in nature – some advice may not be applicable to every product. The term "equipment" refers to the product, be it electrical mains powered, battery powered or combustion engine powered.

- **Before Use** - If you are not familiar with the safe operation/handling of the equipment or are in any way unsure of any aspect of suitability or correct use for your application, you should complete training conducted by a person or organization qualified in safe use and operation of this equipment, including fuel/electrical handling and safety.
- Do NOT operate the equipment in flammable or explosive environments, such as in the presence of flammable liquids, gases, or dust. The equipment may create sparks or heat that may ignite flammable substances.
- Keep clear of moving parts.
- Equipment may be a potential source of electric shock or injury if misused.
- Do NOT operate the equipment if it is damaged, malfunctioning or is in an excessively worn state.
- Do NOT allow others to use the equipment unless they have read this manual and are adequately trained.
- Keep packaging away from children - risk of suffocation! Operators must use the equipment correctly. When using the equipment, consider conditions and pay due care to persons and property.

General Work Area Safety

- Work areas should be clean and well it.
- Do not operate the equipment if bystanders, animals etc are within operating range of the equipment or the general work area.
- If devices are provided for connecting dust extraction / collection facilities, ensure these are connected and used properly. Dust collection can reduce dust-related hazards.

General Personal Safety

- Wear appropriate protective equipment when operating, servicing, or when in the operating area of the equipment to help protect from eye and ear injury, poisoning, burns, cutting and crush injuries. Protective equipment such as safety goggles, respirators, non-slip safety footwear, hard hat, hearing protection etc should be used for appropriate equipment / conditions. Other people nearby should also wear appropriate personal protective equipment. Do not wear loose clothing or jewellery, which can be caught in moving parts. Keep hair and clothing away from the equipment.
- Stay alert and use common sense when operating the equipment. Do not over-reach. Always maintain secure footing and balance.
- Do not use the equipment if tired or under the influence of drugs, alcohol, or medication.
- This equipment is not intended for use by persons with reduced physical, sensory, or mental capabilities.

General Fuel Safety

- Petrol/fuel/gasoline is extremely flammable – keep clear of naked flames or other ignition sources.
- Do not spill fuel. If you spill fuel, wipe it off the equipment immediately – if fuel gets on your clothing, change clothing.
- Do NOT smoke near fuel or when refuelling.
- Always shut off the engine before refuelling.
- Do NOT refuel a hot engine.
- Open the fuel cap carefully to allow any pressure build-up in the tank to release slowly.
- Always refuel in well-ventilated areas.
- Always check for fuel leakage. If fuel leakage is found, do not start, or run the engine until all leaks are fixed.

General Carbon-Monoxide Safety

- Using a combustion engine indoors **CAN KILL IN MINUTES**. Engine exhaust contains carbon-monoxide – a poison you cannot smell or see.
- Use combustion engines OUTSIDE only, and far away from windows, doors, and vents.

General Equipment Use and Care

- Keep packaging away from children and pets, potential risk of suffocation or choking.
- The equipment is designed for domestic use only.
- Handle the equipment safely and carefully.
- Before use, inspect the equipment for misalignment or binding of moving parts, loose components, damage, or any other condition that may affect its operation. If damaged, have the equipment repaired by an authorised service centre or technician before use.
- Prevent unintentional starting of the equipment - ensure equipment and power switches are in the OFF position before connecting or moving equipment. Do not carry equipment with hands or fingers touching any controls. Remove any tools or other items that are not a part of the equipment from it before starting or switching on.
- Do not force the equipment. Use the correct equipment for your application. Equipment will perform better and be safer when used within its design and usage parameters.
- Use the equipment and accessories etc. in accordance with these instructions, considering working conditions and the work to be performed. Using the equipment for operations different from those intended could result in hazardous situations.
- Always keep equipment components (engines, hoses, handles, controls, frames, housings, guards etc) and accessories (cutting tools, nozzles, bits etc) properly maintained. Keep the equipment clean and, where applicable, properly lubricated.
- Store the equipment out of reach of children or untrained persons. To avoid burns or fire hazards, let the equipment cool completely before transporting or storing. Never place or store the equipment near flammable materials, combustible gases, or liquids etc.
- The equipment is not weather-proof, and should not be stored in direct sunlight, at high ambient temperatures or locations that are damp or humid.
- Do not clean equipment with solvents, flammable liquids, or harsh abrasives.
- For specific equipment safety use and care, see Equipment Safety.

© T-Rex

General Electrical Safety

- Inspect electrical equipment, extension cords, power bars, and electrical fittings for damage or wear before each use. Repair or replace damaged equipment immediately.
- Ensure all power sources conform to equipment voltage requirements and are disconnected before connecting or disconnecting equipment.
- When wiring electrically powered equipment, follow all electrical and safety codes.
- Always use a Residual Current Device (RCD) (GFCI) / Earth Leakage Circuit Breaker / Safety Switch when operating this item (electrical items only).
- High voltage / high current power lines may be present. Use extreme caution to avoid contact or interference with power lines. Electrical shock can be fatal.

General Electrical Safety

- Electrically grounded equipment must have an approved cord and plug and be connected to a grounded electrical outlet.
- Do NOT bypass the ON/OFF switch and operate equipment by connecting and disconnecting the electrical cord.
- Do NOT use equipment that has exposed wiring, damaged switches, covers or guards.
- Do NOT use electrical equipment in wet conditions or in damp locations.
- Do NOT use electrical cords to lift, move or carry equipment.
- Do NOT coil or knot electrical cords, and ensure electrical cords are not trip hazards.

General Service Information

- The equipment must be serviced or repaired at authorised service centres by qualified personnel only.
- Replacement parts must be original equipment manufacturer (OEM) to ensure equipment safety is maintained.
- Do NOT attempt any maintenance or repair work not described in this manual.
- After use, the equipment and components may still be hot – allow the equipment to cool and disconnect spark plugs and/or electrical power sources and/or batteries from it before adjusting, changing accessories, or performing repair or maintenance.
- Do NOT adjust while the equipment is running.
- Perform service-related activities in suitable conditions, such as a workshop.
- Replace worn, damaged or missing warning/safety labels immediately.

Child Choking Hazard!



- **WARNING: CHOKING HAZARD - CHILDREN UNDER 8 YRS. CAN CHOKE OR SUFFOCATE ON SMALL PARTS. ADULT SUPERVISION REQUIRED.**
- Carefully inspect anything a baby or child could gain access to, including this product & packaging.
- Dangers include anything of a size that could become stuck or lodged in a baby or child's airway.
- Dangers include things like raw, hard fruit and vegetable pieces, large pieces of meat, bones or sausage skins, popcorn, nuts, hard lollies and corn chips, small magnets and batteries, coins, beads, marbles and small uninflated balloons, broken toys and smaller toys, buttons, keys, and coins. But there are also many more.
- Pay particular attention to accessories, nuts, bolts, screws, washers, caps, covers, loose parts, parts that could be removed or break off, pieces of packaging, staples, tape etc.
- In the case of any doubt, secure the item of concern in an appropriate manner, or completely remove the possibility of access by a baby or child.

HAZARDOUS COMPONENTS!

- **BE AWARE THAT THE EQUIPMENT MAY INCLUDE HAZARDOUS COMPONENTS, SUCH AS MOVING PARTS.**
- **MOVING PARTS CAN CAUSE SERIOUS INJURY AND EVEN DEATH IF USED IMPROPERLY OR WITHOUT SUFFICIENT PPE.**
- **DO NOT USE THIS EQUIPMENT ON UNEVEN SURFACES AND ALWAYS MAINTAIN GOOD BALANCE WHEN USING THIS EQUIPMENT. FAILURE TO DO SO MAY CAUSE SERIOUS INJURY.**
- **MAINTAIN A SECURE GRIP OF THE PRODUCT AT ALL TIMES.**

Intended Use

- Use the machine only for its intended purpose. Any use not described in this manual is considered misuse.
- To operate the machine safely and correctly, follow all safety, assembly, operating and maintenance instructions in this manual.
- All operators must read and understand this manual and be aware of the potential hazards associated with the machine.
- The machine is designed for transporting goods within its maximum permissible load capacity.
- Any modification to the machine or its components is considered misuse. The manufacturer is not liable for any direct or indirect damage resulting from misuse or unauthorised modification.
- **WARNING: REMOVING OR MODIFYING SAFETY COMPONENTS MAY RESULT IN EQUIPMENT DAMAGE AND SERIOUS INJURY. HIGH RISK OF INJURY.**

Ambient Conditions

Operate the machine only under the following conditions:

- Relative humidity: 0–70%
- Ambient temperature: 0–40°C

Do not expose the machine, particularly the battery, to temperatures above 40°C.

Prohibited Use

- Do not operate the machine outside the technical limits specified in this manual.
- Do not operate the machine without the required safety devices.
- Do not use the machine for any purpose other than its intended use as described in this manual.
- Do not modify the machine or its components.

Safety Instructions

- Replace missing, damaged or illegible safety labels immediately.
- Local laws and regulations may specify a minimum operator age or otherwise restrict use of the machine.
- To reduce the risk of malfunction, equipment damage and injury, follow these safety instructions.

General Safety

- Operate the machine only in sufficiently well-lit areas where hazards can be clearly seen.
- Do not operate the machine while tired, unable to concentrate, or under the influence of alcohol or drugs.
- Take extra care on slippery surfaces. Wear suitable non-slip footwear.
- The machine must be operated only by trained personnel.
- Use both hands when operating the machine.
- Keep this manual with the machine. If the machine is transferred to another person, provide this manual with it.
- Inspect the machine for safe operating condition before each use.
- Take extra care when operating near pools, ponds or other bodies of water.
- Do not operate the machine in rain or in damp or wet conditions.
- Disconnect the battery before making adjustments or performing maintenance.

Charger Safety

- Use the charger only to charge the battery supplied for this machine. Do not use it to charge other batteries.
- Do not use the charger in damp or wet conditions.
- Disconnect the charger by gripping the plug. Do not pull on the cable, as this may damage the cable or plug and compromise electrical safety.
- Do not use the charger if the power cord, plug or charger is damaged.
- Keep the charger away from heat sources.
- Do not use an extension lead to power the charger.
- Do not place metal objects on or into the charging contacts.
- Do not open or disassemble the charger. If it malfunctions, contact a qualified service technician.
- Charge the battery only with the charger specified by the manufacturer. Using an unsuitable charger may damage the battery or create a fire hazard.

Battery Safety

- A damaged or improperly used battery may release vapour. Move to fresh air immediately and seek medical attention if you experience any adverse symptoms.
- Keep the battery away from acids, flammable materials and other sources of ignition while charging.
- Charge the battery only at ambient temperatures between 0°C and 40°C. Allow the battery to cool after charging if necessary.
- Protect the battery from heat, sparks, open flames and other ignition sources.
- Use the battery only at temperatures between 0°C and 40°C.
- Prevent the battery terminals from short-circuiting. Before disposal, transport or storage, protect and insulate the terminals with suitable non-conductive material.
- Never open or disassemble the battery.

© T-Rex

Safety Symbols

The product may have safety warning labels attached to it, explained below. Understand the symbols on your product and their meanings. If any stickers become unreadable, unattached etc., replace them.



Flammable Material Hazard
Flammable liquids, gases, or substances etc may present. Avoid ignition sources and open flames. Danger of fire.



Read User Manual
Read and fully understand product safety warnings, operation, procedures etc before using the product.



Use Hand Protection
Wear appropriate hand protection and take due care as the product or use of the product may present hand hazards.



Carbon-Monoxide Hazard
Do not use the product in confined areas or without adequate ventilation. Carbon-monoxide poisoning can be fatal.



Electrocution / Electrical Shock Hazard
High voltage or high current electricity may be present or required by the product. Take due care when handling electrical products, cables, plugs and leads. Electrical shock can be fatal.



Toxic Fumes / Dust Hazard
Using the product or by-products from use may produce fumes, smoke or particles that could be harmful if inhaled. Wear appropriate breathing protection and have adequate ventilation.



Explosive Material Hazard
Combustible liquids, gases, or substances etc may be present. Avoid ignition sources and open flames. Danger of explosion.



Cutting / Amputation Hazard
The product may have blades, edges or mechanical devices that can cause severe cut injury to fingers, limbs etc. Take due care when handling and using the product.



Crush Hazard
The product may have blades, edges or mechanical devices that can cause severe crush injury to fingers, limbs etc. Take due care when handling and using the product.



Single Operator Only
The product must be operated by a single person only. More than one person operating the product may introduce additional hazards.



Use Face Protection
Wear appropriate full-face protection and take due care as the product or use of the product may present face and eye hazards.



Use Foot Protection
Wear appropriate foot protection and take due care as the product or use of the product may present foot hazards.



Use Eye / Ear / Head Protection
Wear appropriate eye and / or ear and / or head protection and take due care as the product or use of the product may present eye, hearing, and head hazards.



Running Hazard
Do not run on or near the product as doing so may present a fall hazard.



Diving Hazard
Do not dive into the product as doing so may present a neck / head injury hazard.



Adult Supervision Required
Always supervise children and other users of a product to prevent drowning or injury.



Skin Penetration / Puncture Hazard
The product may produce pressure, emit liquids or objects that can cause severe injury to fingers, limbs, blood etc. Take due care when handling and using the product.



Hot Surface Hazard
Be aware that the product may produce high temperatures and hot surfaces that can cause burn injuries.



Flying Debris Hazard
Be aware that the product or use of the product may present hazards produced by flying debris. Wear appropriate clothing and protective devices.



Moving Parts Hazard
Be aware that the product contains or uses mechanical devices that move or rotate. Always wait for moving parts to stop fully before handling the product, adjusting, maintenance etc.

© T-Rex

 **Carbon-Monoxide Hazard** Do not use the product in confined areas or without adequate ventilation. Carbon-monoxide poisoning can be fatal.	 **Pull Hazard** Be aware that the product contains or uses mechanical devices that can pull in objects and can cause severe injury to fingers, limbs etc. Take due care when handling and using the product.	 **Slope / Fall Injury Hazard** Be aware that using the product on sloping surfaces or in slippery conditions may present additional dangers from falls and contact with blades, moving parts, hot surfaces etc.	 **"Slam Dunk" Warning** Do NOT attempt "slam dunk" manoeuvres as this may result in severe injury due to falling, product breakage or collapse etc.
 **Electrocution / Electrical Shock Hazard - Outdoor** High voltage or high current electricity may be present or required by the product. Do NOT use in rain, damp, or wet conditions. Electrical shock can be fatal.	 **Electrocution / Electrical Shock Hazard - Disconnect** High voltage or high current electricity may be present or required by the product. Always disconnect the product from the electrical supply before handling the product, adjusting, maintenance etc.	 **Power Line Electrocution Hazard** High voltage / high current power lines may be present. Use extreme caution to avoid contact or interference with power lines. Electrical shock can be fatal.	 **"Kick-Back" Hazard** High level of "kick-back" hazard that can cause the machine to suddenly rotate towards operator. Kick-back injury can be fatal.
 **Winch Operator Position Hazard** Do NOT stand between winch and load. Do NOT use winch to move people.	 **Winch Lift Hazard** Do NOT LIFT load vertically. Use machine to PULL only.	 **Cable Hazard** Ensure that load bearing cable is not kinked or knotted.	 **Winch Cable Hazard** Ensure that there is a minimum number of cable coils on winching mechanism.
 **Winch Hook Hazard** Carry hook to load – do NOT throw or run.	 **Flash / Blinding Hazard** Wear appropriate eye protection for welding. Direct exposure to weld arcs may cause permanent eye injury.	 **Laser Hazard** Laser may be in use – do NOT look directly at laser or allow others to.	 **Choking Hazard** Children under 8 yrs. Can choke or suffocate on small parts. Adult supervision required.

Table of Contents

Safety **2**
Safety Symbols 5
Parts Identification **8**
Assembly **9**
Assembly Steps 9
Battery Installation 13
Operation **14**
Operating Instructions 14
Electric Lift Operation 14
Using the Machine on a Slope 14
Charger 15
Lithium Battery Care and Maintenance **16**
Top 3 Battery Care Requirements 16
Maintenance **18**
Maintenance Schedule 18
Cleaning 18
Storage 18
Disposal 18
Troubleshooting **19**
Specifications **20**

Parts Identification

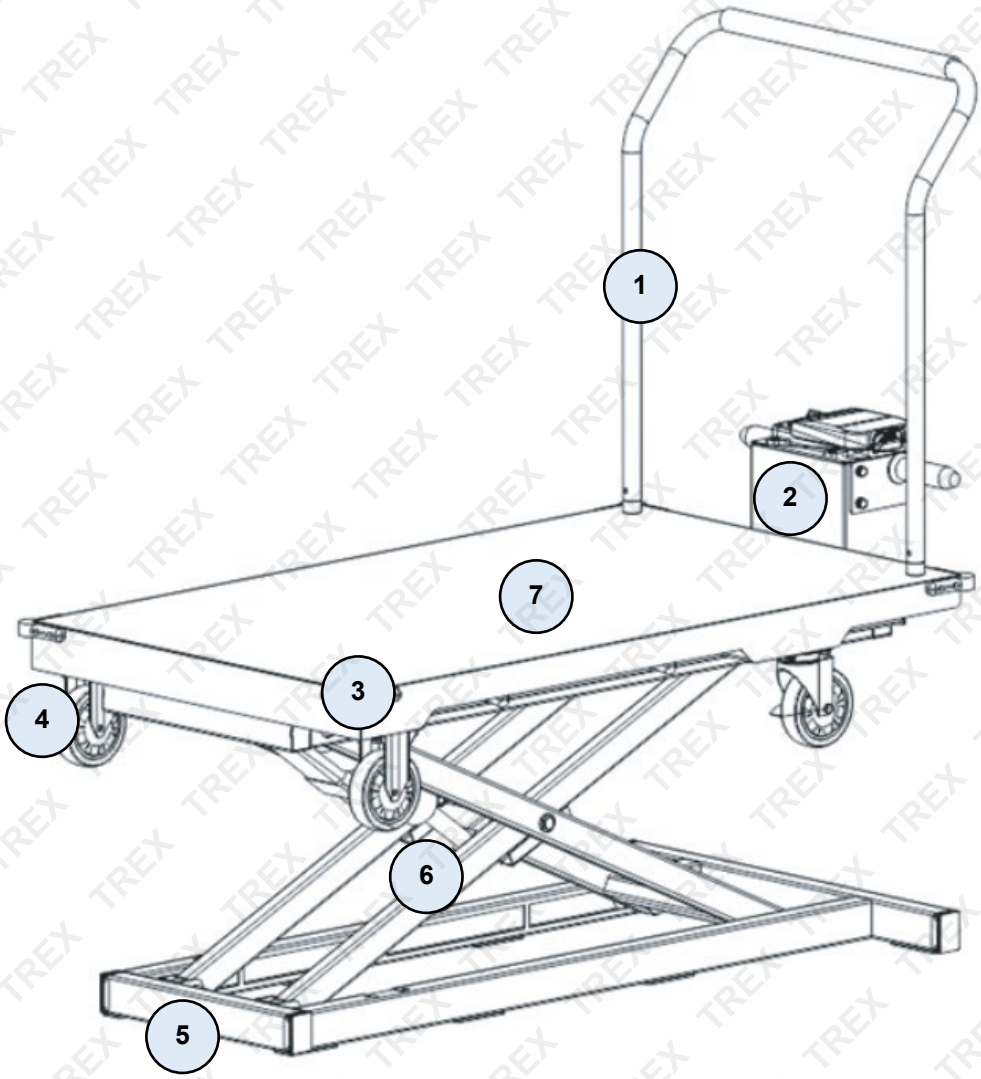

No.	Component	No.	Component
1	Handle	5	Main Base
2	Battery Box	6	Scissor Arm
3	Table Corner Protector	7	Table Platform
4	Wheels		

© T-Rex

Assembly

Check the contents immediately after delivery for any transport damage or missing parts.

Report any transport damage or missing parts immediately after receiving and unpacking the machine, and before putting it into operation. Claims made later may not be accepted.

Do not fully tighten any screws until assembly is complete.

Assembly Steps

FIGURE 1

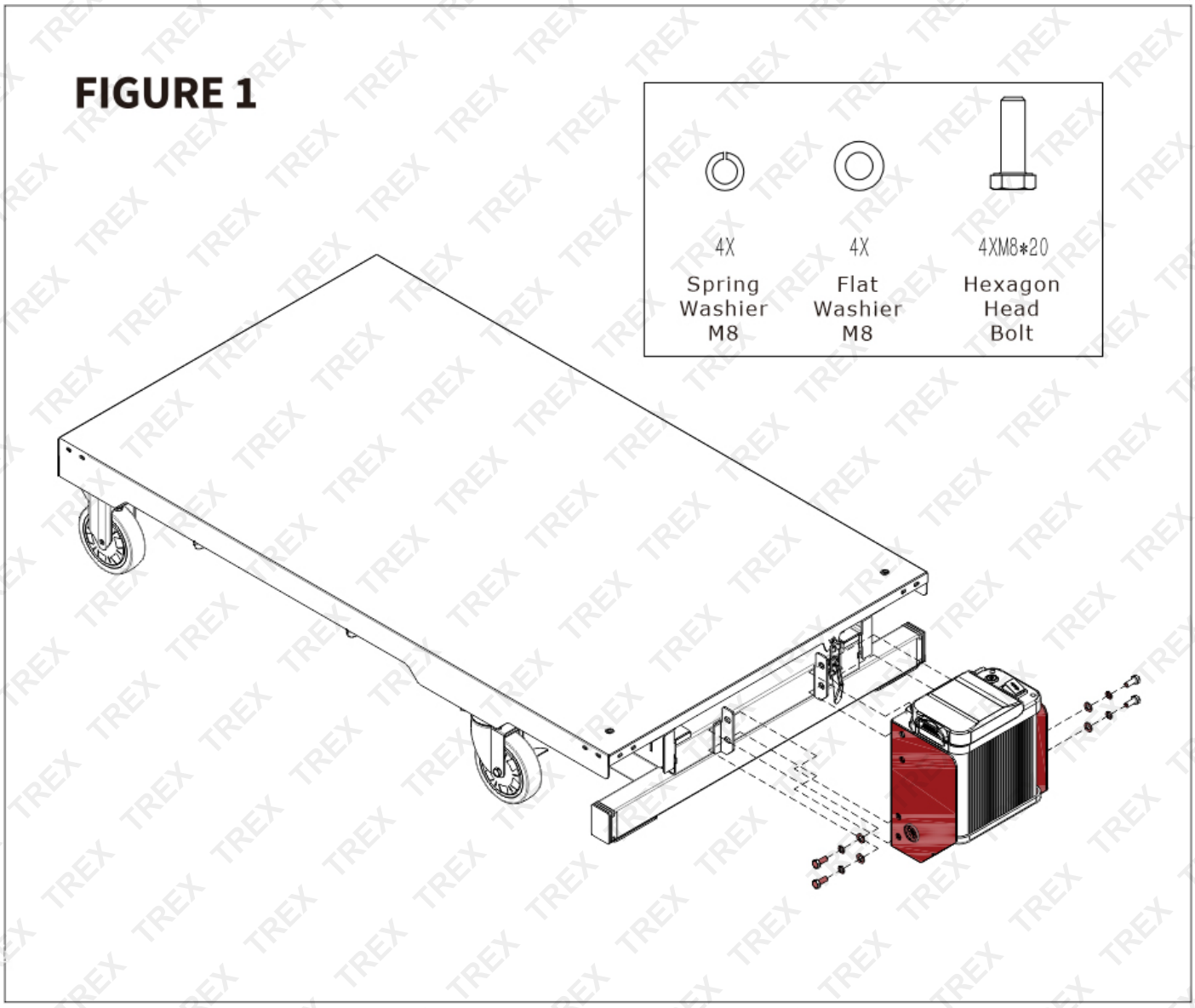

FIGURE 2

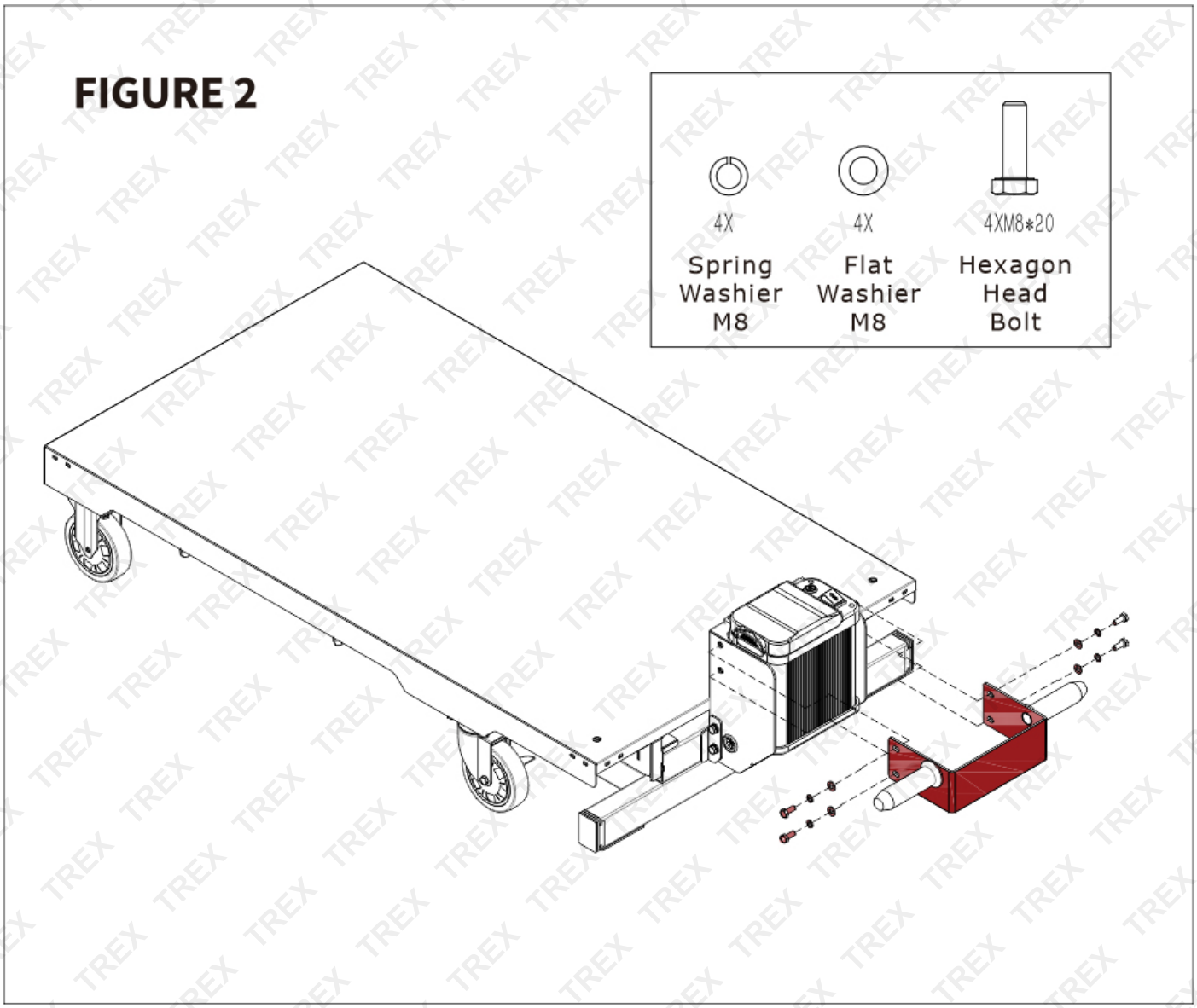
4X
Spring Washier M8
4X
Flat Washier M8
4XM8*20
Hexagon Head Bolt

FIGURE 3

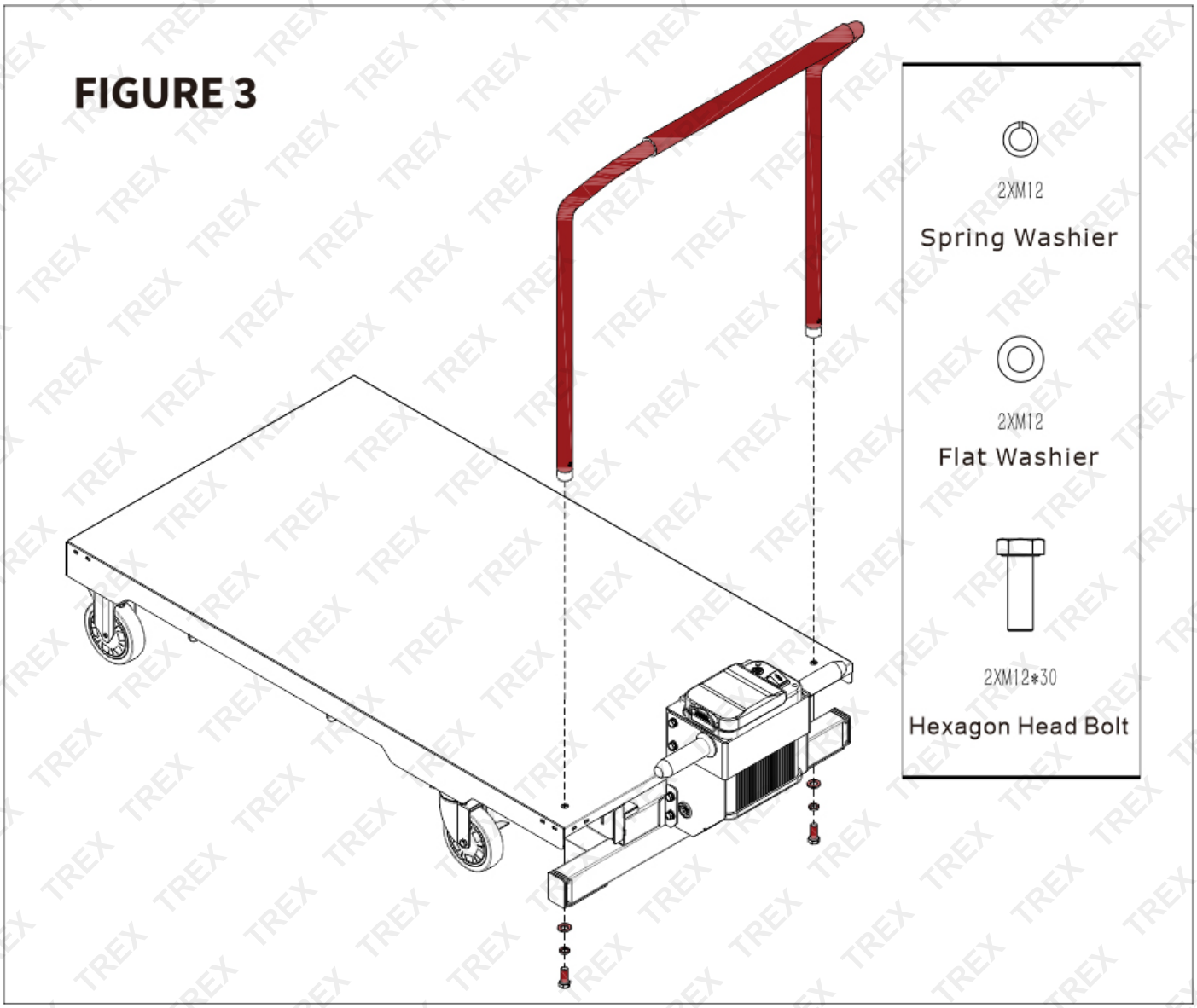
2XM12
Spring Washier
2XM12
Flat Washier
2XM12*30
Hexagon Head Bolt

FIGURE 4

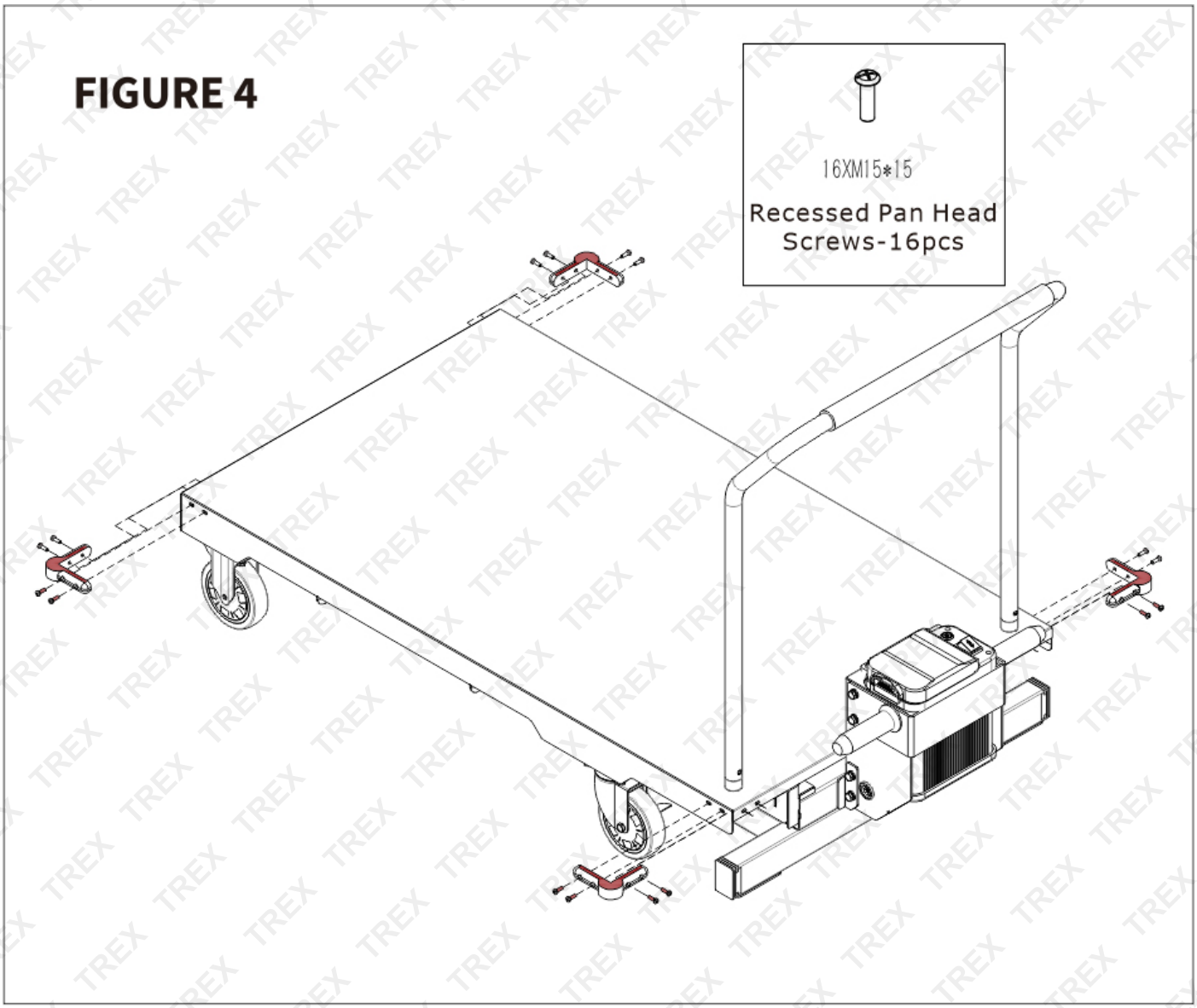

Battery Installation

Ensure the battery is correctly installed before use.

Incorrect Position

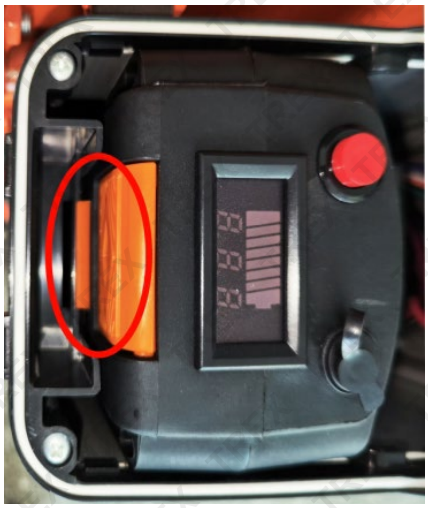

Poor contact may occur if the battery is not fully inserted. The locking clip remains visible.

Correct Position

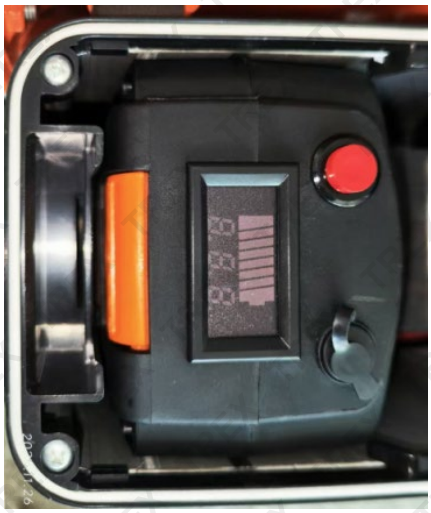

The battery is fully inserted when the locking clip is engaged and no longer visible.

Installing the Battery



1. Hold the battery securely.
2. Press and hold the centre of the locking clip.
3. Insert the battery fully into the battery compartment.
4. Release the locking clip and ensure the battery is securely locked in place before use.

Operation

Operate the machine only when it is in good working condition.

Before each use, visually inspect the machine. Check the safety devices, electrical controls, cables and fasteners for damage, looseness or other defects. Replace or repair any damaged parts before operating the machine.

Operating Instructions

WARNING: Disconnect the battery before carrying out any maintenance, adjustments or servicing.

NOTICE: Never remove the battery while the machine is operating. If the machine will not be used for an extended period, press the shutdown button. Operate the electric motor only when the battery has sufficient charge.

Electric Lift Operation



1. Set the battery box power switch (#1) to ON.
2. Once the power is on:
   - Press Hydraulic Button #2 to raise the platform. The platform can be raised to approximately 1.5 m.
   - Press Hydraulic Button #3 to lower the platform.
3. If the hydraulic pump begins to strain or make an unusual noise, the platform may have reached its upper or lower travel limit.

NOTICE: Release Button #2 or #3 immediately when the platform reaches its travel limit to prevent damage to the hydraulic system.

Using the Machine on a Slope

- Never overload the machine, particularly when operating on a slope.
- Always operate the machine within its maximum rated load capacity. Exceeding the load limit may result in loss of control, personal injury or equipment damage.

Charger

The charging system is integrated into the battery pack.

Charging the Battery

1. Connect the charger to the battery charging port.
2. Connect the charger to a 230 V AC, 50 Hz mains power outlet.
3. Allow the battery to charge fully.
4. When the charger indicates that the battery is fully charged, disconnect the charger from the mains power outlet, then disconnect it from the battery.

Battery Voltage Display

The voltage display on the battery pack indicates the approximate battery charge level.

Voltage Display	Approximate Battery Status
42 V	Fully charged (approximately 100%)
35 V	Approximately 50% charge
Below 30 V	Recharge the battery

Battery Pack Controls

1. Voltage Display Button
2. Voltage Display
3. Charging Port



Lithium Battery Care and Maintenance

Top 3 Battery Care Requirements

1. **Charge battery before first use**. The battery may arrive with some charge, regardless of this the battery must be charged for 4 hours on the initial charge and 4 hours for each subsequent charge.
2. **Charge battery immediately when it is depleted.** Do not store a depleted battery. This will permanently impact the life of the battery. If the battery is going to be stored for a period of time, fully charge the battery before storing.
3. **Disconnect battery when not in use**. To prolong the life of a battery, disconnect it from the unit when not in use. Disconnect chargers from the battery once charged.

To ensure the battery maintains optimum performance, follow the guidelines outlined below.

- For best results, charge batteries in temperatures between 10°C and 30°C
- When battery is charged, disconnect the charger from the power supply and remove the battery from the charger.
- If a battery is stored or otherwise unused for an extended period, and the battery has no charge remaining when you check it, consider it to be damaged. Do not attempt to recharge it or to use it. Replace it with a new battery.
- Use only with the battery charger specified by the manufacturer.
- Ensure that the battery charger electrical cord is not subjected to damage or stress. Do not operate the battery charger if it has a damaged electrical cord or plug.
- Do not use the charger in wet areas or expose it to rain or water.
- The typical estimated life of a Lithium-Ion battery is about two to three years or 300 to 500 charge cycles, whichever occurs first. One charge cycle is a period of use from fully charged, to fully discharged, and fully recharged again.
- Explosion hazard – protect the battery against heat, for example, direct sunlight and fire. Do not store batteries in vehicles or locations subject to heat.
- Batteries can explode in the presence of an ignition source, such as a pilot light. To reduce the risk of serious personal injury, never use any cordless product in the presence of open flame. Exploding batteries can propel debris and chemicals.
- Do not open the battery – danger of short-circuiting and/or explosion.
- Do not attempt to destroy or disassemble the battery pack or remove any of its components.
- Do not touch the battery terminals with metal objects and/or body parts as short-circuit and/or personal injury may result.
- Explosion hazard – do not open and/or short-circuit the battery.
- Poison hazard – battery leakage (liquid ejection). Under extreme conditions, liquid may be ejected from the battery – avoid contact. If contact accidentally occurs, immediately seek medical attention, and flush with water. If liquid contacts eyes, immediately seek medical attention, flush with clean water for at least 10 minutes. Liquid ejected from the battery may cause irritation or burns.
- Dispose of non-serviceable batteries in an environmentally responsible manner and according to local regulations.

Failure to adhere to the requirements above may result in the battery becoming inoperative or battery life being reduced. In extreme cases or abuse, battery overheating, or fire may result.

DANGER - BATTERY CHARGING, USE AND STORAGE

Like mobile phones, laptops, cordless vacuum cleaners etc, this product may contain or be related to a lithium ion battery pack (lithium ion batteries and lithium ion battery related items only). Lithium ion batteries allow fast charging and high capacities, however care must be taken to reduce chances of a fault, and increase safety in case a fault occurs. Catastrophic incidents involving lithium ion batteries have a tendency to result in large amounts of smoke and fire. Be sure to follow the points below to reduce the likelihood of danger whenever you use, charge or store any lithium ion battery.

- Never charge a battery that has been damaged or subjected to a forceful impact.
- Never charge a battery that has been exposed to moisture or water.
- Never charge a battery with a charger that wasn't supplied with the battery.
- Never use a battery in a device that it wasn't specifically designed for.
- Never use a battery with a modified or damaged device.
- Never modify the battery, product, charger, circuitry or wiring.
- Never charge a battery in an exit path that may be used by people to leave a room or building in case of an emergency, for example, the hallway or foyer of a residence.
- Never charge a battery in an area or building that doesn't have the recommended number of working smoke detectors that have been tested in accordance with local guidelines.
- Never charge a battery when the battery or charger is displaying a problem or charging incorrectly.
- Always charge batteries on a non-combustible surface, for example, on a concrete floor.
- Always charge batteries at least 3m away from anything combustible, such as floors, wall surfaces, furniture, storage shelves etc.
- Always charge batteries in an open area (outside if possible) ensuring the battery and charger are away from moisture and water.
- Always disconnect batteries from the charger after charging.
- Always remove or disconnect batteries from the device/product when not in use.
- Always ensure batteries are charged under adult supervision. Do not charge unattended. Do not charge batteries while no one is home or while people are sleeping.
- Keep batteries away from heat and moisture.
- Damaged batteries should be disposed of through your local e-waste collection service.
- Avoid mixing and matching chargers. Unplug products when fully charged, and charge batteries in a cool, dry place away from combustible materials like beds, lounges, or carpet.
- During charging and use, check your lithium-ion batteries for overheating, signs of swelling, leaking, or venting gas. Immediately stop using your product if these signs are present.
- Allow batteries to cool after use and before charging.

Maintenance

ATTENTION: Surface corrosion will occur on metal surfaces over time and the rate of oxidation depends on factors such as proximity to the ocean and humidity or condensation of water vapour on metal surfaces. To mitigate this, WD40 can be used to remove surface corrosion then, when applied periodically, it will prevent rust from forming.

WARNING: Disconnect the battery before carrying out any maintenance, adjustments or servicing. Accidental or automatic activation of the machine may result in serious injury. The machine requires minimal maintenance. If a fault or defect occurs, have the machine inspected and repaired by trained personnel only.

NOTICE: Clean the machine regularly after use. Regular cleaning helps extend the service life of the machine and supports safe operation. Regularly inspect all safety labels. Replace any that are damaged, missing or illegible. Regularly inspect the general condition of the machine. Store the machine in a dry, enclosed location after use.

Maintenance Schedule

After Each Work Shift

- Check all cables and connections to ensure they are secure and undamaged.
- Inspect the machine for visible damage, loose parts or abnormal wear.

Cleaning

NOTICE: Do not use cleaning agents that may damage metal surfaces. Do not use abrasive cleaners or scrubbing agents.

- Wipe the machine with a damp cloth after each use.
- Do not use a high-pressure cleaner.
- Clean external components with a damp sponge or cloth.
- Do not clean electrical or electronic components with water.
- After each use, inspect the machine and remove dirt, debris or other residues with a suitable brush.

Storage

- Clean all components thoroughly before storage.
- Store the machine and components in a dry location at temperatures above -10°C.
- Fully charge the battery before storage.

NOTICE: For extended storage, recharge the battery at least once a month.

Disposal

- Do not dispose of the machine, battery or electrical components with household waste.
- Dispose of the machine and battery in accordance with local regulations. Contact your local council or an approved recycling facility for information about suitable disposal and recycling options.

Troubleshooting

WARNING: Disconnect the battery before troubleshooting, inspecting or repairing the machine.

Problem	Possible Cause	Solution
No electrical assistance	Battery charge is low	Check the battery voltage using the voltage display. Recharge or replace the battery if necessary.
	Speed control lever operated too quickly	The machine may take approximately 1 second to begin moving after the speed control is operated due to the soft-start function.
	EBS is ON	For the 2022 version, switch off the EBS using the speed control lever. Press the P button and ensure the indicator light is green.
	Power switch is damaged	Replace the power switch.
	Cable is loose or damaged	Check all cables and connections. Secure loose connections or replace damaged components.
	Motor is stuck	1. Disconnect the motor cable from the motor controller. Check whether the motor rotates freely. If it does, the motor controller may be faulty. 2. If the motor remains stuck, replace the motor.
	ECU in the motor controller is faulty	Repeated overload may damage the ECU. Have the ECU inspected and replaced if necessary. Do not overload the machine.
Excessive resistance	BAS is ON	Switch the power on without operating the speed control. Check whether the BAS is engaged and disengage it if required.
Battery does not charge	Poor connection	Check the battery and charger connections and reconnect them securely.
	Faulty charger	Replace the charger with a compatible charger specified by the manufacturer.
	Faulty battery	Replace the battery.

Professional Servicing Only

When the motor controller is replaced, the ECU may require reprogramming. This work must be carried out by a qualified service technician in accordance with the applicable service instructions.

Specifications

Maximum Load Capacity	200kg
Minimum Height	225mm
Maximum Height	1140mm
Platform Size	1260 x 730mm
Lifting System	Electric Hydraulic
Lift Control	Electric Switch
Motor Type	Brushless
Power Type	Battery
Power (Watts)	300W
Battery Voltage	36V DC
Battery Capacity	7.5Ah
Battery Energy	270Wh
Runtime	5h
Charge Time	4h
Frame & Chassis Finish	Steel
Frame & Chassis Finish	Steel
Finish	Powder-coated
Castor Diameter	125mm
Castor Type	PU swivel
Brake Pedal	Yes

© T-Rex

Some experts believe that the incorrect or prolonged use of almost any product may cause serious injury or death. To help reduce your risk of serious injury or death, refer to the information below. For more information, see www.datastreamserver.com/safety

- Consult all documentation, packaging, and product labelling before use. Note that some products feature documentation available online. It is recommended to print and retain the documentation.
- Before each use, check the product for loose/broken/damaged/missing parts, wear, or leaks (if applicable). Never use a product with loose/broken/damaged/missing parts, wear, or leaks.
- Products must be inspected and serviced (if applicable) by a qualified technician every 6 months. This is based on average residential use by persons of average size and strength, and on a property of average metropolitan size. Use beyond these recommendations may require more frequent inspections/servicing.
- Ensure that all users of the product have completed a suitable industry recognised training course before being allowed access to the product.
- The product has been supplied by a general merchandise retailer that may not be familiar with your specific application or description of application. Be sure to attain third-party approval from a qualified specialist for your application before use, regardless of any assurances from the retailer or its representatives.
- This product is not intended for use where fail-safe operation is required. As with any product (for example, automobile, computer, toaster), there is the possibility of technical issues that may require the repair or replacement of parts, or the product itself. If the possibility of such failure and the associated time it may take to rectify could in any way inconvenience the user, business, or employee, or financially affect the user, business, or employee, then the product is not suitable for your requirements. This product is not intended for use where incorrect operation or a failure of any kind, including but not limited to, a condition requiring product return, replacement, parts replacement, or service by a technician may cause financial loss, loss of employee time or an inconvenience requiring compensation.
- If this product has been purchased in error when considering the information presented here, contact the retailer directly for details of their returns policy, if required.

edisons.com.au

© T-Rex. All rights reserved. No part of this document, including descriptive content, concepts, ideas, diagrams, or images may be reproduced or transmitted in any form or by any means, electronic or mechanical, including photocopying, scanning, or recording, or any information storage and retrieval system, without express permission or consent from the publisher.