Form No. 3460-726 Rev B

Baffle Kit

Z Master® Professional 2000 or 4000 Series Riding Mower

Model No. 147-7360
Model No. 147-7361
Model No. 147-7362
Model No. 147-7363

Installation Instructions

Safety

Safety and Instructional Decals

Safety decals and instructions are easily visible to the operator and are located near any area of potential danger. Replace any decal that is damaged or missing.

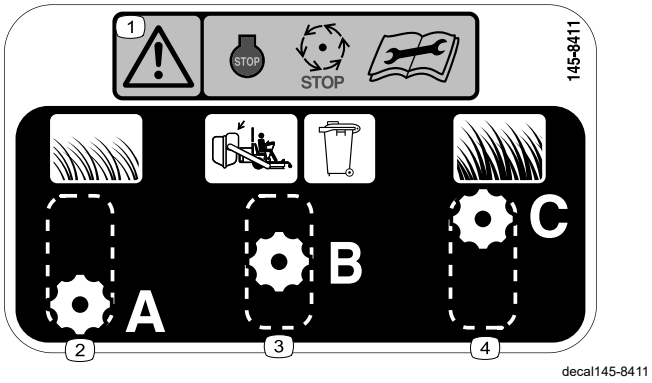

145-8411

1. Warning—stop the machine, wait for all moving parts to stop, read the *Operator's Manual* before performing maintenance.
2. Short, light grass
3. Bagging setting
4. Tall, dense grass

© 2024—The Toro® Company
8111 Lyndale Avenue South
Bloomington, MN 55420

Register at www.Toro.com.

Original Instructions (EN)
Printed in the USA
All Rights Reserved

3460-726

Installation

Loose Parts

Use the chart below to verify that all parts have been shipped.

Procedure	Description	Qty.	Use
1	No parts required	–	Prepare the machine.
2	No parts required	–	Remove the existing deck fasteners.
3	Straight baffle assembly Curved baffle assembly Carriage bolt (3/8 x 7/8 inch) Shoulder bolt Locknut (3/8 inch) Knob Carriage bolt (3/8 x 1-1/4 inches) Washer	1 1 3 1 4 1 1 1	Install the baffles and knob.
4	Decal 145-8411	1	Apply the decal.
5	No parts required	–	Tighten the fasteners.

1

Preparing the Machine

No Parts Required

Procedure

⚠ WARNING

The machine could fall onto someone and cause serious injury or death.

- **Always shut off the engine, engage the parking brake, and remove the key before performing any maintenance on the mower.**
- **Use extreme caution when the machine is raised and supported on its back. The blades and moving parts are exposed and could cause injury.**
- **Use this position only for cleaning, removing blades or baffles, and maintenance.**

You can raise the front of the mower and support it using jack stands to access underneath the machine.

1. Disengage the PTO, move the motion-control levers to the NEUTRAL-LOCK position, and engage the parking brake.
2. Shut off the engine, remove the key, and wait for all moving parts to stop before leaving the operating position.
3. Raise the front of the machine and support it with jack stands.
4. Repair all bent or damaged areas of mower deck and replace any missing parts.
5. Clean the machine of any debris on the deck to ease installation.

2

Removing the Existing Deck Fasteners

No Parts Required

48-inch Mower Decks

Note: Keep the fasteners in case you choose to remove the baffles in the future.

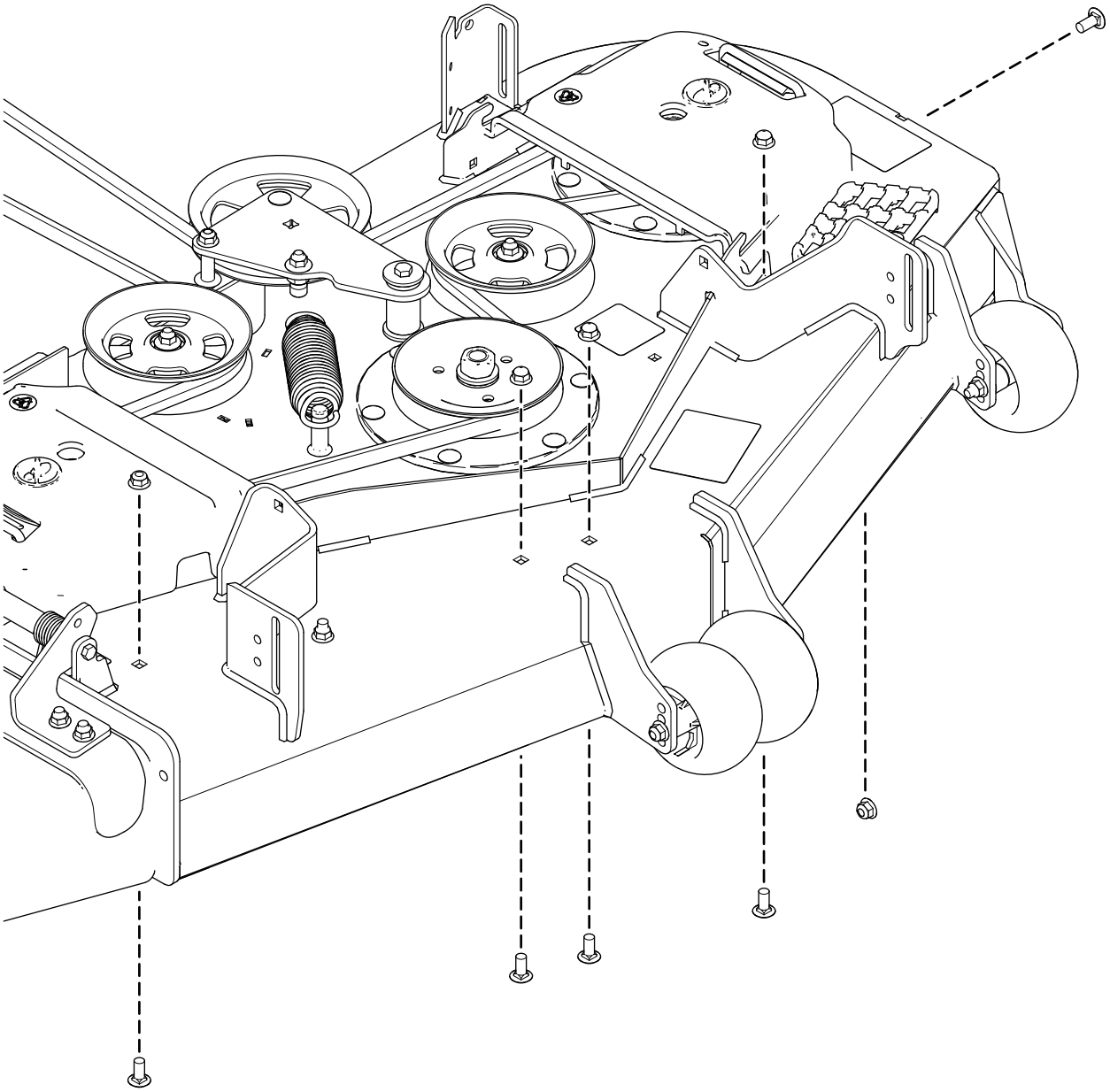

g420724

52-inch Mower Decks

Note: Keep the fasteners in case you choose to remove the baffles in the future.

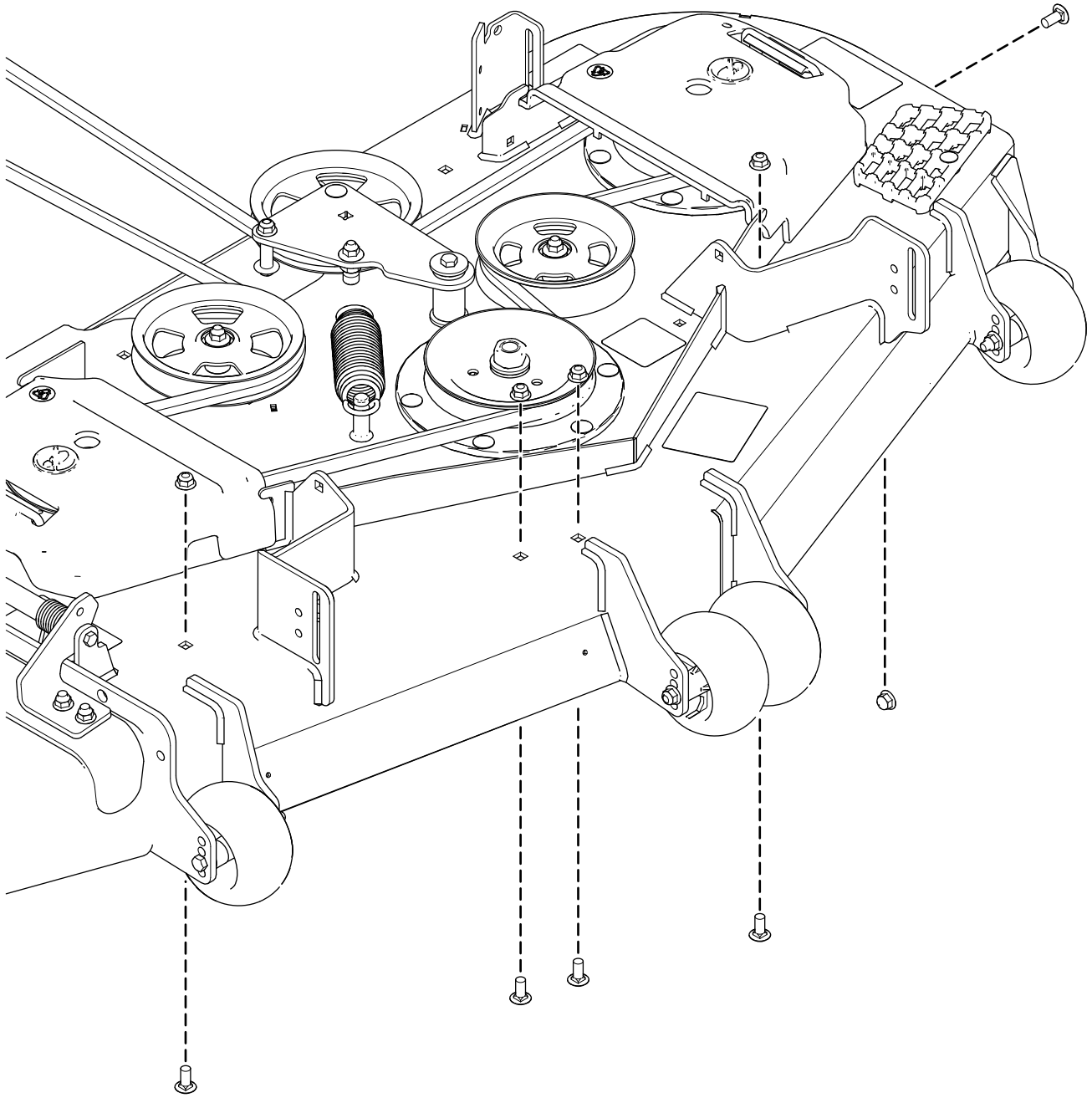

g420723

60-inch Mower Decks

Note: Keep the fasteners in case you choose to remove the baffles in the future.

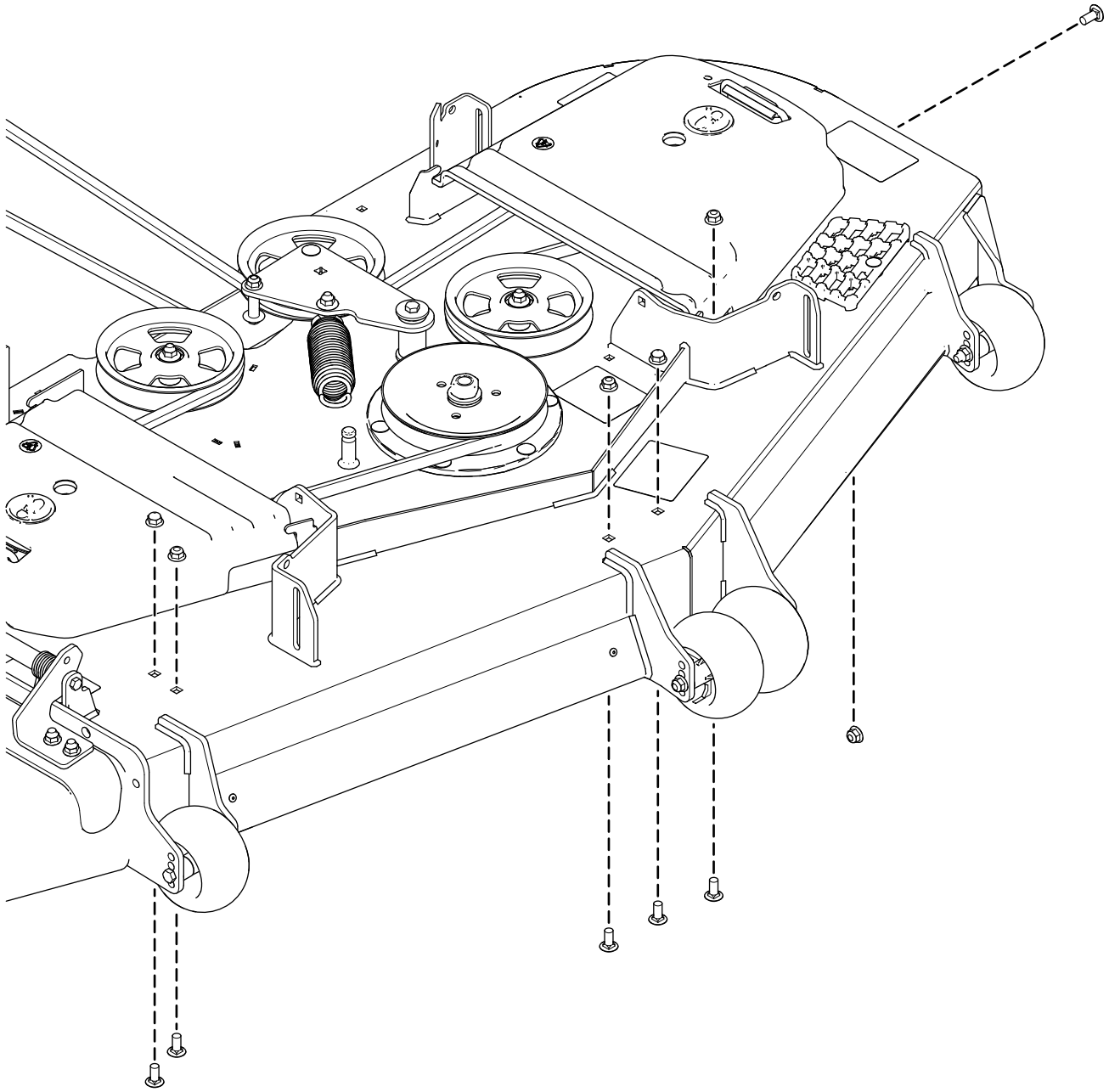

g421514

72-inch Mower Decks

Note: Keep the fasteners in case you choose to remove the baffles in the future.

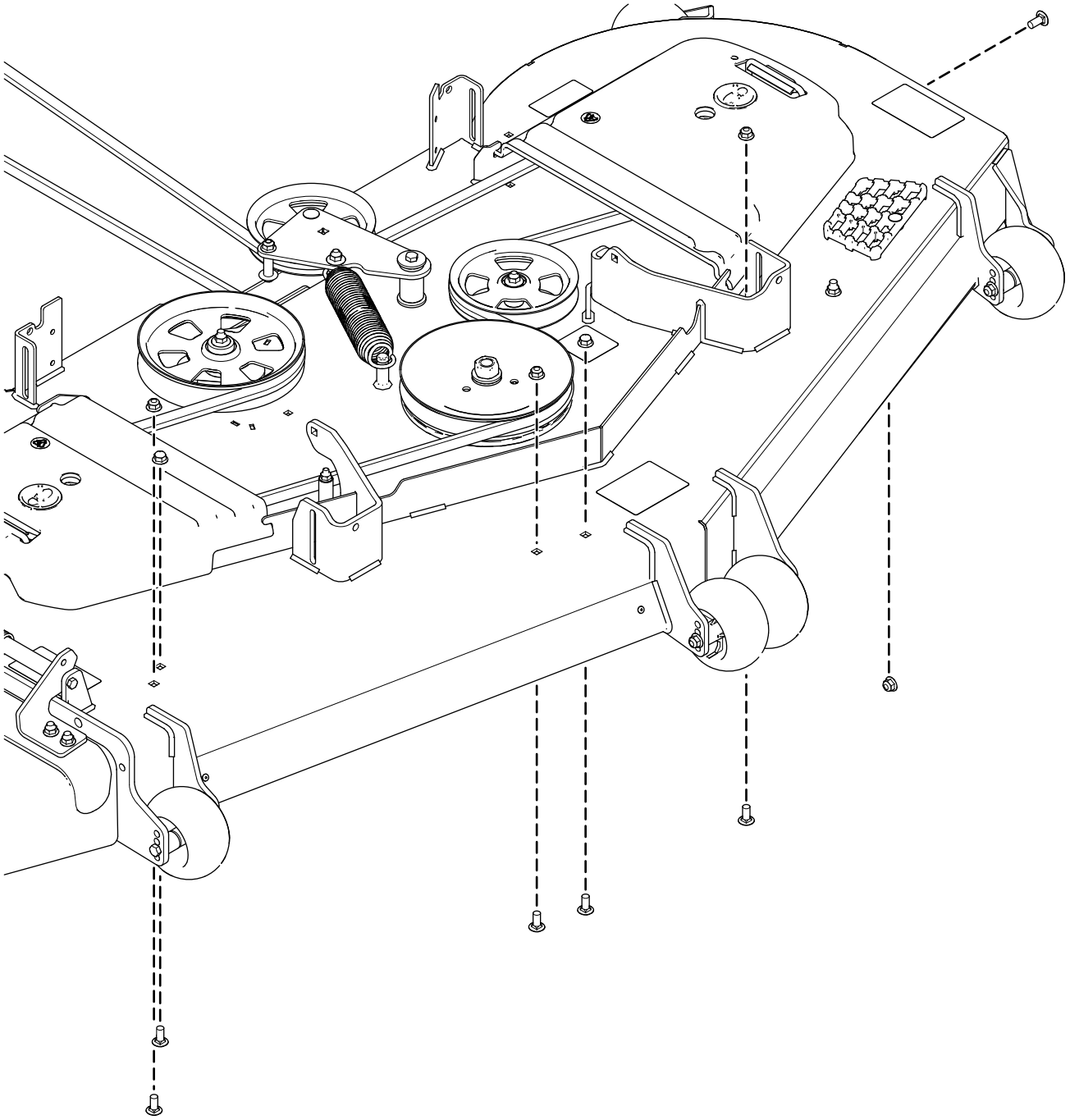

g421515

3

Installing the Baffles and Knob

Parts needed for this procedure:

1	Straight baffle assembly
1	Curved baffle assembly
3	Carriage bolt (3/8 x 7/8 inch)
1	Shoulder bolt
4	Locknut (3/8 inch)
1	Knob
1	Carriage bolt (3/8 x 1-1/4 inches)
1	Washer

48-inch Mower Decks

1. Loosely secure the straight baffle assembly and curved baffle assembly to the mower deck using 3 carriage bolts (3/8 x 7/8 inch), 1 shoulder bolt, and 4 locknuts (3/8 inch).
2. Secure the knob using 1 washer and 1 carriage bolt (3/8 x 1-1/4 inches).

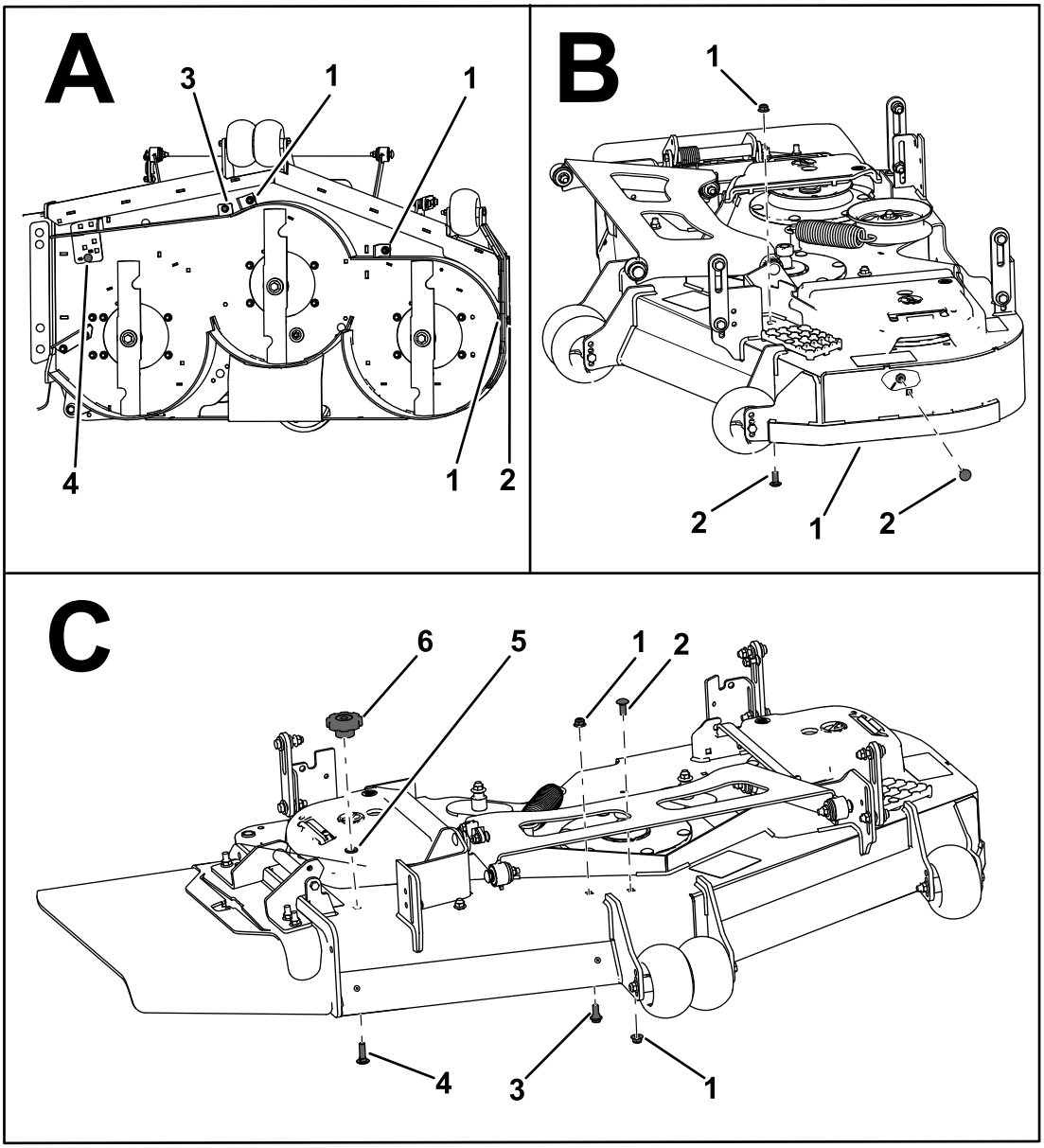

g520958

Figure 5

1. Locknut (3/8 inch)
2. Carriage bolt (3/8 x 7/8 inch)
3. Shoulder bolt
4. Carriage bolt (3/8 x 1-1/4 inches)
5. Washer
6. Knob

52-inch Mower Decks

1. Loosely secure the straight baffle assembly and curved baffle assembly to the mower deck using 3 carriage bolts (3/8 x 7/8 inch), 1 shoulder bolt, and 4 locknuts (3/8 inch).
2. Secure the knob using 1 washer and 1 carriage bolt (3/8 x 1-1/4 inches).

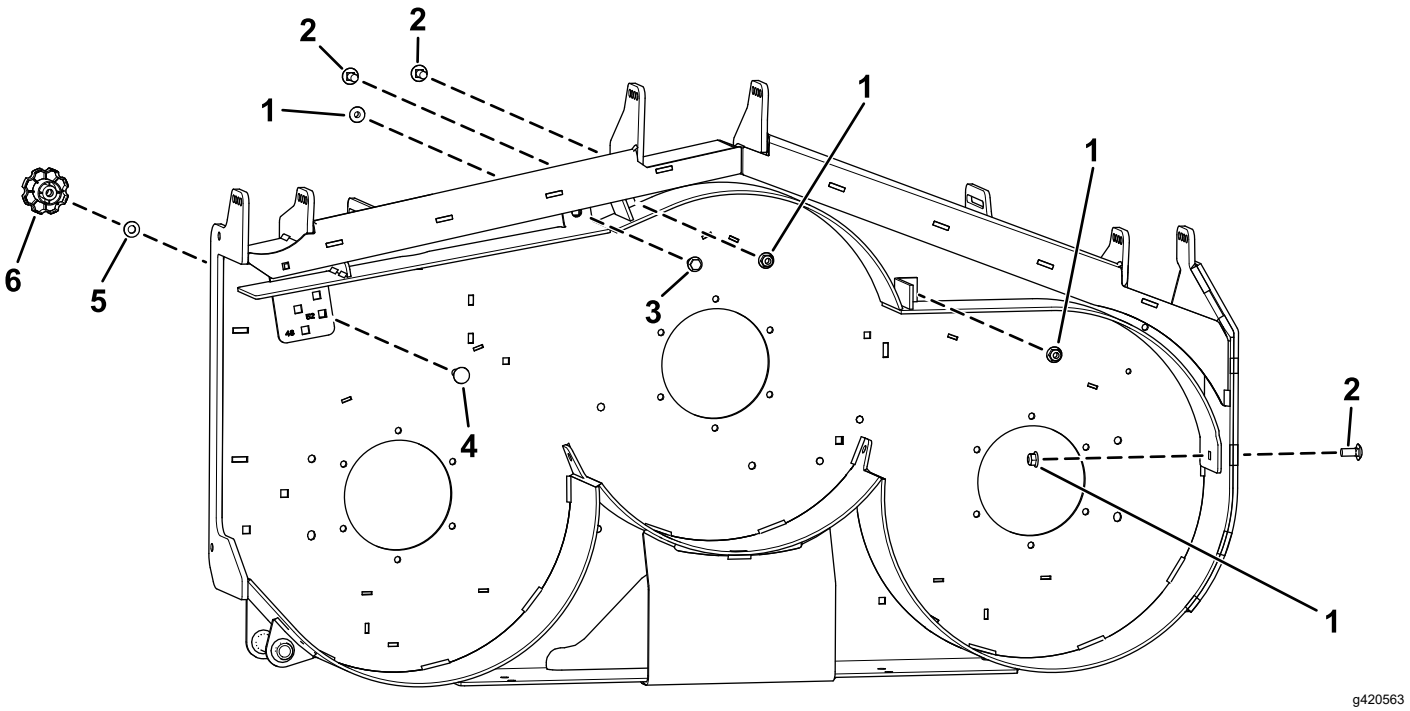

1. Locknut (3/8 inch)
2. Carriage bolt (3/8 x 7/8 inch)
3. Shoulder bolt
4. Carriage bolt (3/8 x 1-1/4 inches)
5. Washer
6. Knob

60-inch Mower Decks

1. Loosely secure the straight baffle assembly and curved baffle assembly to the mower deck using 3 carriage bolts (3/8 x 7/8 inch), 1 shoulder bolt, and 4 locknuts (3/8 inch).
2. Secure the knob using 1 washer and 1 carriage bolt (3/8 x 1-1/4 inches).

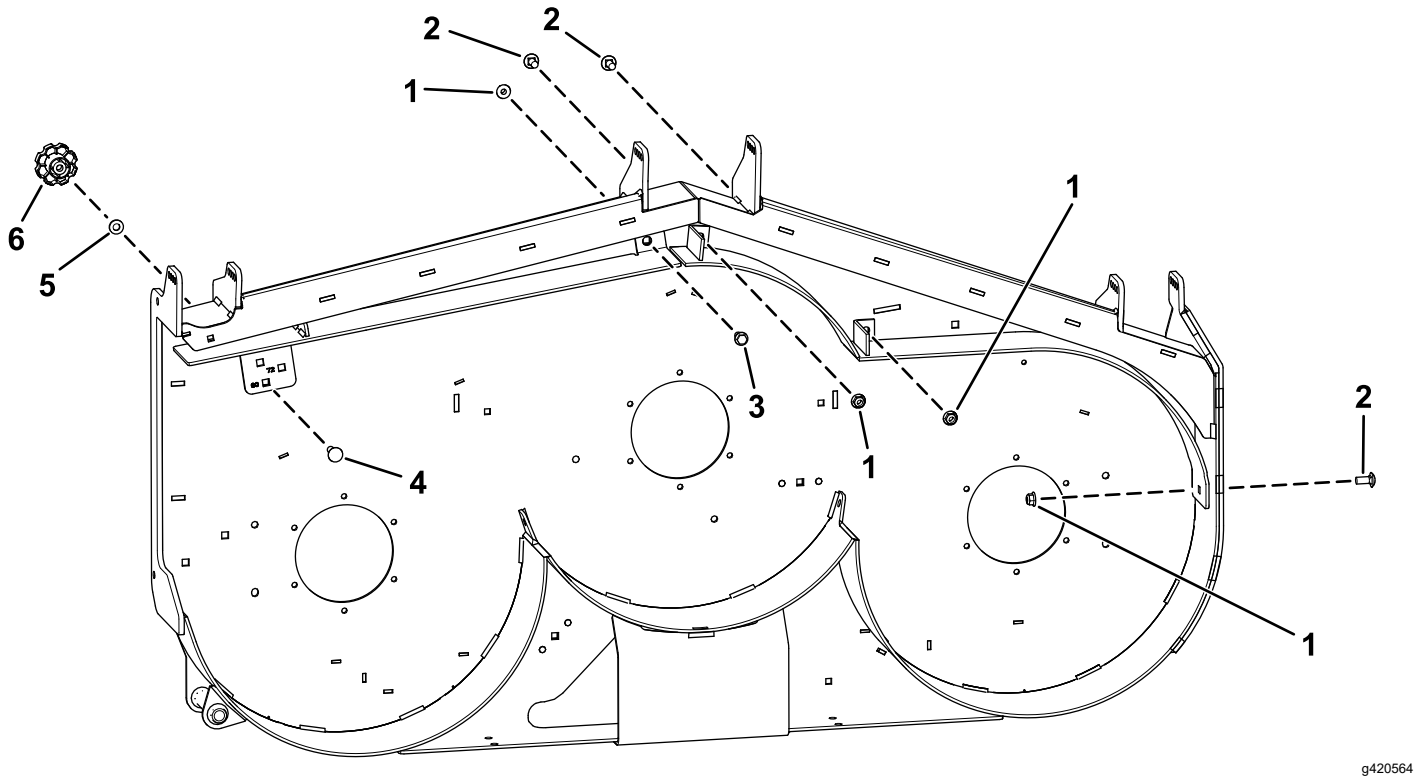

1. Locknut (3/8 inch)
2. Carriage bolt (3/8 x 7/8 inch)
3. Shoulder bolt
4. Carriage bolt (3/8 x 1-1/4 inches)
5. Washer
6. Knob

72-inch Mower Decks

1. Loosely secure the straight baffle assembly and curved baffle assembly to the mower deck using 3 carriage bolts (3/8 x 7/8 inch), 1 shoulder bolt, and 4 locknuts (3/8 inch).
2. Secure the knob using 1 washer and 1 carriage bolt (3/8 x 1-1/4 inches).

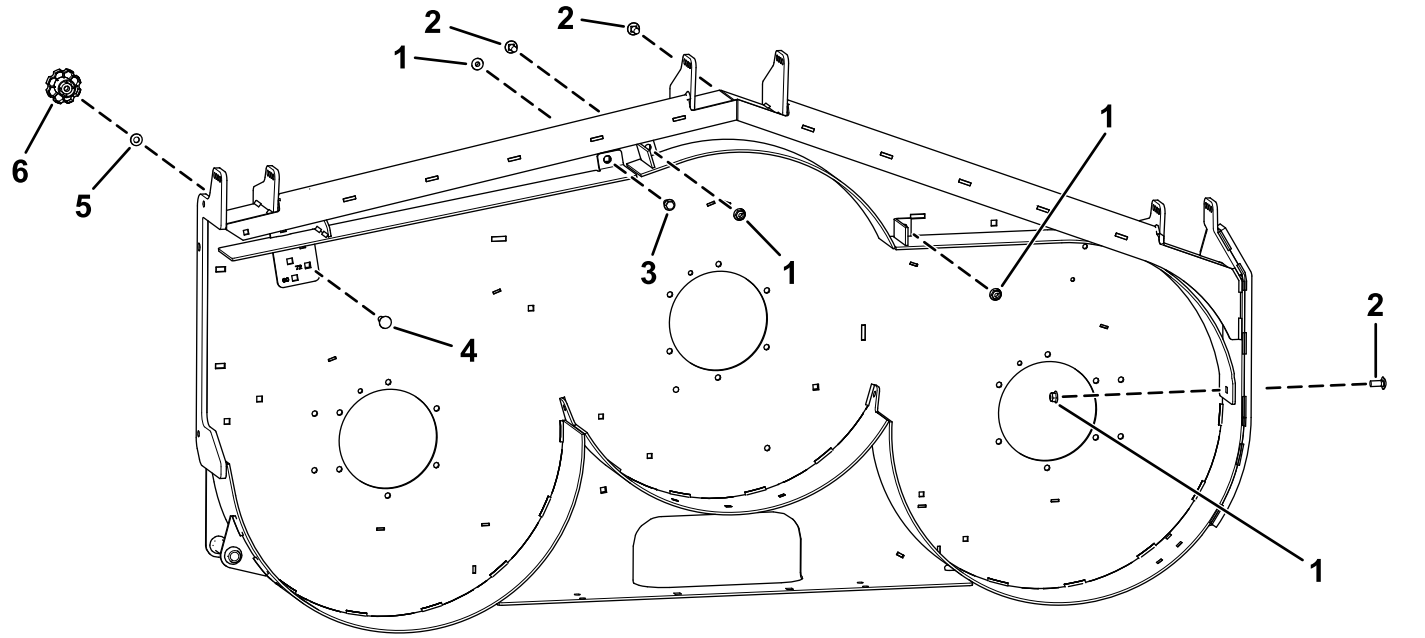

g420565

1. Locknut (3/8 inch)
2. Carriage bolt (3/8 x 7/8 inch)
3. Shoulder bolt
4. Carriage bolt (3/8 x 1-1/4 inches)
5. Washer
6. Knob

4

Applying the Decal

Parts needed for this procedure:

1	Decal 145-8411

48-inch Mower Decks

Apply the decal near the knob.

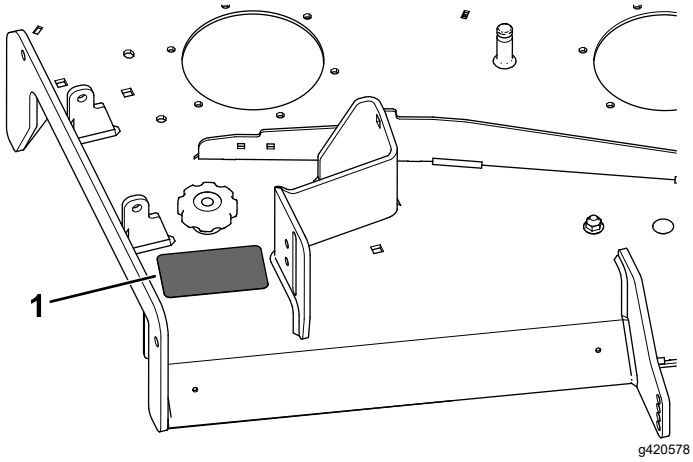

Figure 9

1. Apply the decal here.

52-inch Mower Decks

Apply the decal near the knob.

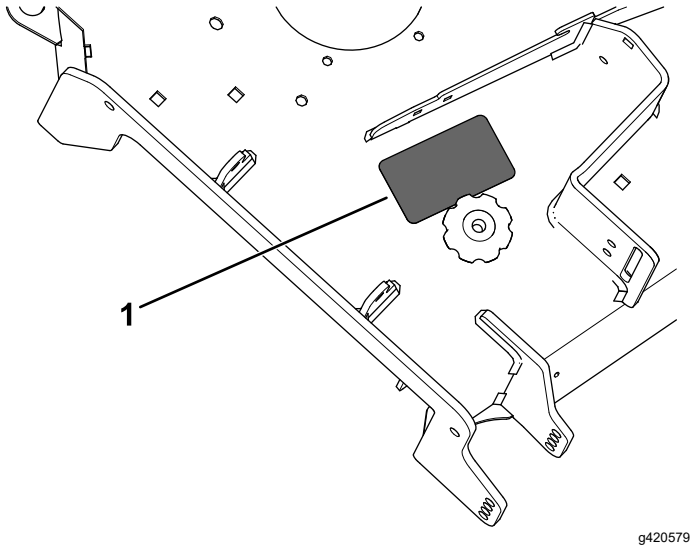

Figure 10

1. Apply the decal here.

60-inch Mower Decks

Apply the decal near the knob.

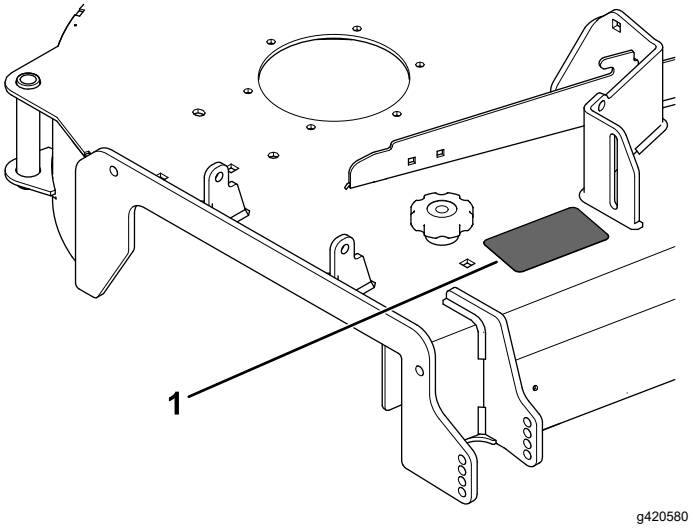

Figure 11

1. Apply the decal here.

72-inch Mower Decks

Apply the decal near the knob.

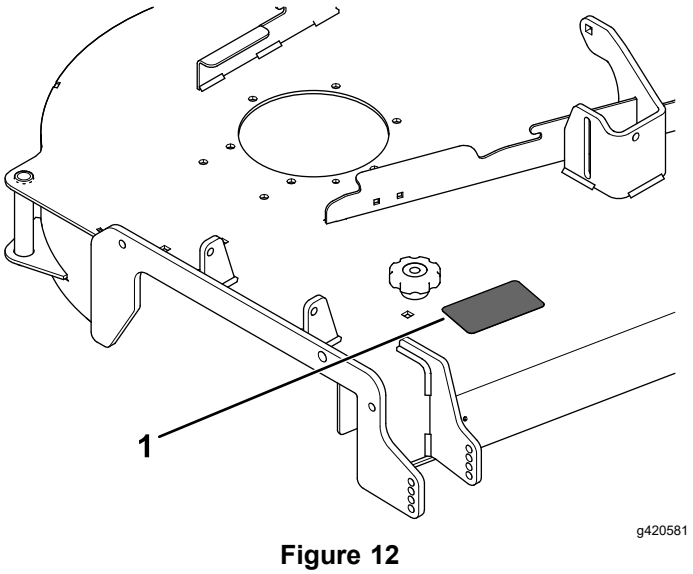

Figure 12

1. Apply the decal here.

5

Tightening the Fasteners

No Parts Required

Procedure

Tighten all the nuts and bolts that you loosely installed in procedure 3 Installing the Baffles and Knob (page 7).

Operation

Positioning the Flow Baffle

The following figures are recommendations only. Adjustments vary by grass type, moisture content, and the height of the grass.

Note: If the engine power draws down and the mower ground speed is the same, open the baffle.

The suggested uses for the positions are as follows:

Position A:

- Short, light grass mowing conditions
- Dry conditions
- Smaller grass clippings
- Propels grass clippings farther away from the mower

Position B:

Use this position when bagging. Always align it with the blower opening.

Position C:

- Tall, dense grass mowing conditions
- Wet conditions
- Lowers the engine-power consumption
- Allows increased ground speed in heavy conditions

Refer to the following figures for the position location.

48-inch mower decks:

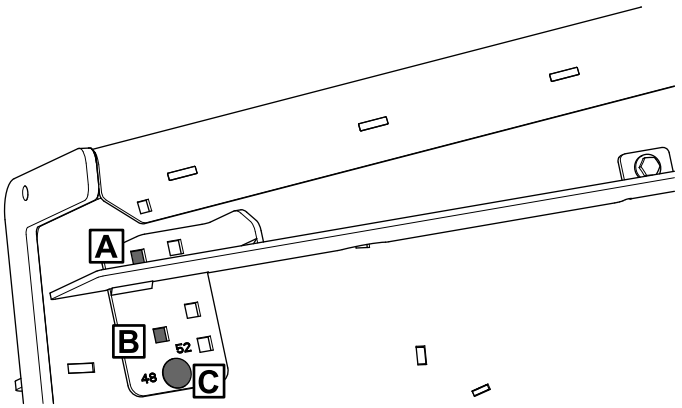

g420632

52-inch mower decks:

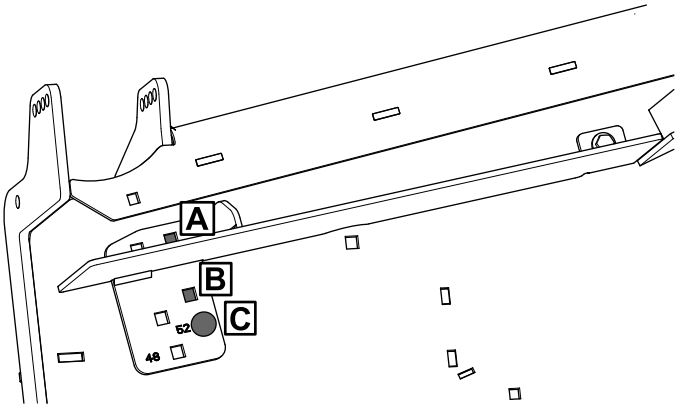

g420633

60-inch mower decks:

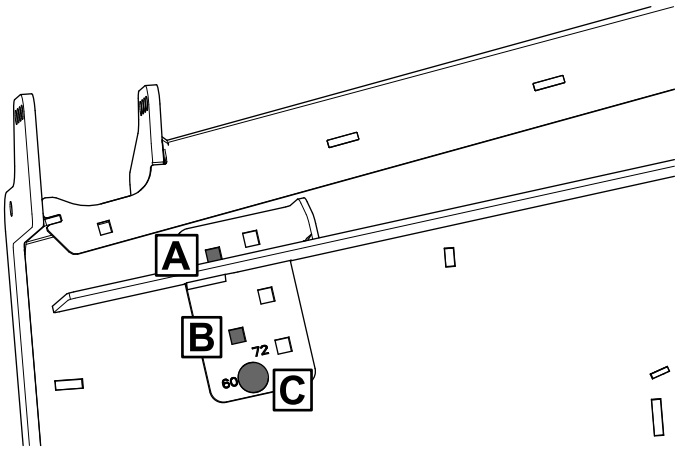

g420634

72-inch mower decks:

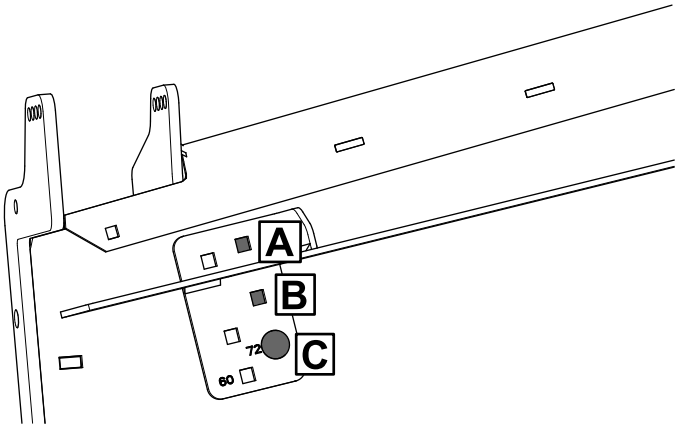

g420635



Count on it.