USER MANUAL

TURBRO

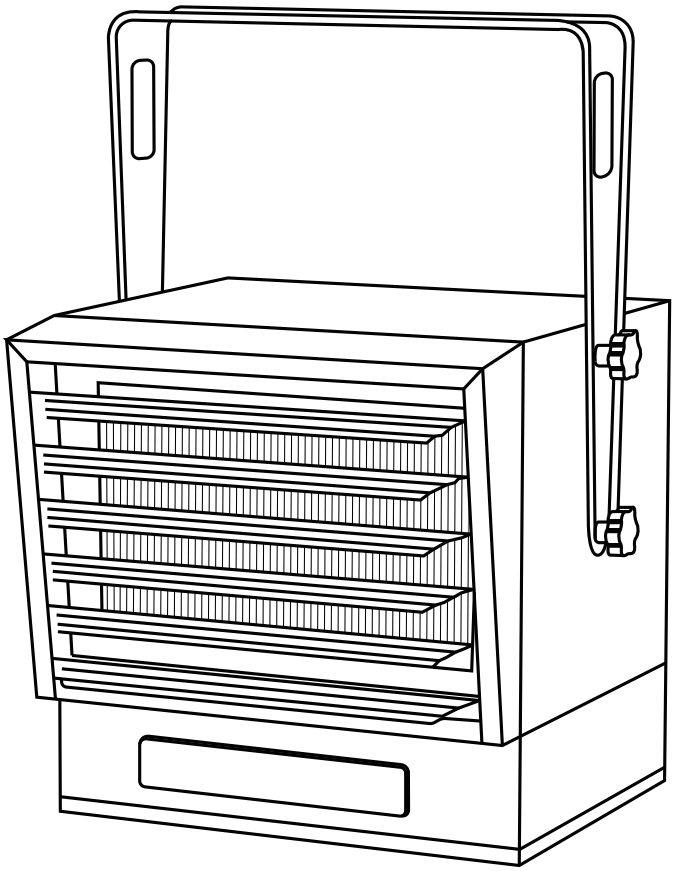

GARAGE HEATER

Neighborhood

MODEL: GH10K Smart
GH15K Smart

HARDWIRED INSTALLATION REQUIRED

THIS HEATER MUST BE GROUNDED AND HARDWIRED TO A PROPERLY SIZED CURRENT PROTECTION CIRCUIT BREAKER IN ACCORDANCE WITH THE (US) NATIONAL ELECTRIC CODE AND LOCAL CODES.

KEEP THIS USER MANUAL FOR FUTURE REFERENCE.

CONTENTS

SAFETY PRECAUTIONS 01

GENERAL SAFETY 01

ELECTRICAL SAFETY INFORMATION 02

SPECIFICATIONS 03

LOCATING THE HEATER 04

INSTALLATION 05

MOUNTING THE BRACKET 05

HANGING THE HEATER IN THE BRACKET 06

MULTIPLE VERTICAL ANGLES 07

CONNECTING THE POWER 08

OPERATING 10

THE Wi-Fi CONNECTION 13

FCC WARNING 16

CLEANING & MAINTENANCE 17

TROUBLESHOOTING 17

WARRANTY INFORMATION 18

Thank you for purchasing a TURBRO Electric Heater!
We're extremely happy that you have decided to join us.

Tip for First-Time Use

When using this heater for the first time, or after a long period of storage. The product may produce a 'new product' smell. Please turn on the heater and run it for at least 15 minutes at the maximum heat level to remove the smell. The smell will dissipate after a few minutes of use.

PET OWNERS WARNING

During the initial use of this heater, or after prolonged storage, it may produce fumes resulting from moisture and dust. These fumes are not harmful and will dissipate within a few minutes. However, to prevent any distress to birds and small pets who are sensitive to fumes, we advise against using the heater around them during this period.

SAFETY PRECAUTIONS

GENERAL SAFETY

DO NOT use this appliance until you have read the safety warnings and operating instructions.
Risk of fire, malfunction, property damage, electric shock, serious injury, or even death may result if warnings and instructions are not adhered to.
The manufacturer declines all responsibility for personal injury or damage to animals or objects caused by inappropriate use of the appliance according to the warnings for installation, use, and maintenance described in this instruction manual.
This appliance is not to be used or have maintenance performed by persons with reduced physical, sensory, or mental capabilities, or lack of experience and knowledge unless they have been given strict supervision or instruction concerning the use of the appliance by a person responsible for their safety.

- This appliance is intended for INDOOR use only. DO NOT use it for any purpose other than that for which it was designed.
- The bottom lid must be installed before use. Otherwise, foreign objects entering the circuit may cause short circuits, machine malfunctions, or abnormal overheating protection.
- Keep the appliance out of reach of children and pets.
- DO NOT alter or modify this appliance in any manner.
- This heater is hot when in use. To avoid burns, do not let bare skin touch hot surfaces.
- Use your heater only with a working smoke detector located in the vicinity of your heater.
- Keep combustible materials, such as furniture, pillows, bedding, papers, clothes, etc., and curtains at least 3 feet (0.9m) from the front of the heater and keep them away from the sides and rear.
- To prevent a possible fire, do not block air intakes or exhaust in any manner. DO NOT use it on soft surfaces, like a bed, where openings may become blocked.
- Do not insert or allow foreign objects to enter any ventilation or exhaust opening as this may cause an electric shock or fire, or damage the heater.
- Always turn off the power of the heater before moving or cleaning, or whenever the unit is not in use.
- DO NOT operate the appliance if it malfunctions or has been dropped or damaged in any manner.
- Regular maintenance is required for safe and efficient operation.

ELECTRICAL SAFETY INFORMATION

Improper installation or failure to follow the procedures outlined in this instruction manual can result in serious electrical shock.

All wiring must be done by a **certified electrician** according to local, state, and national electrical codes, and the heater must be grounded as a precaution against possible electric shock.

All electrical power must be disconnected and the main service box must be locked before inspecting, cleaning, or servicing the heater.

- This heater requires **hardwire installation (no wall plugin).**
- Use copper wires only for supply connections, rated for at least 167°F (75°C). Refer to SPECIFICATION and NEC / local codes.
- Connect to properly grounded outlets only.
- Use only electrical wiring that is in good working order.
- The heater circuit must be protected with proper fuses.
- DO NOT handle the power cord, or plug or unplug, with wet hands. Keep the plug and power cord away from liquids.
- If the power cord is damaged, it must be replaced by the manufacturer, its certified service agent, or similarly qualified persons in order to avoid a hazard.
- To disconnect the heater, turn off the controls and power to the heater circuit at the main disconnect panel.
- Before reusing, disconnect power at the service panel and have the heater inspected by a qualified electrician.

SPECIFICATIONS

Model	GH10K Smart	
Power Supply	240 V, 60Hz	
Rated Current	41.7 AMP	
Rated Power	10000 W / 34129 BTU	
Phase	1	
Adjustable Thermostat	45 - 95°F / 7 - 35°C	
Circuit Breaker	**60 AMP**	or larger, in accordance with NEC and local codes.
Wire Size	**6 AWG, copper only Rated at 167°F / 75°C**	or larger, hardwired in accordance with NEC and local codes.
Product Weight	33.1 lbs / 15.0 kg	
Product Dimensions	14.1 × 15.1 × 16.5 in 35.6 × 38.2 × 41.7 cm	

Model	GH15K Smart	
Power Supply	240 V, 60Hz	
Rated Current	62.5 AMP	
Rated Power	15000 W / 51194 BTU	
Phase	1	
Adjustable Thermostat	45 - 95°F / 7 - 35°C	
Circuit Breaker	**80 AMP**	or larger, in accordance with NEC and local codes.
Wire Size	**4 AWG, copper only Rated at 167°F / 75°C**	or larger, hardwired in accordance with NEC and local codes.
Product Weight	43.7 lbs / 19.8 kg	
Product Dimensions	18.2 × 17.6 × 18.2 in 46.0 × 44.6 × 46.2 cm	

LOCATING THE HEATER

- Observe wall, floor, and ceiling clearance requirements.
- Align the air outlet in the desired direction. The airflow must be directed parallel to or away from the adjacent wall.
- DO NOT use an extension cord or power strip with this product, as using those may increase risk of fire.
- DO NOT locate or use this appliance outdoors or in areas with the following characteristics:
  - Areas where gasoline, paint, or flammable vapors and liquids are used or stored.
  - Corrosive atmospheres such as marine greenhouses or chemical storage areas.
  - In bathrooms, laundry areas, and similar indoor locations with high levels of moisture.
  - Where it may fall into a bathtub or other water container.
  - Near heated surfaces and open fire.
- Install heater out of traffic areas, maintaining the clearances stated in **Figure 1**. Ensure that the airflow is not restricted or obstructed by any items, and it should gently sweep exposed walls instead of blowing directly onto them.

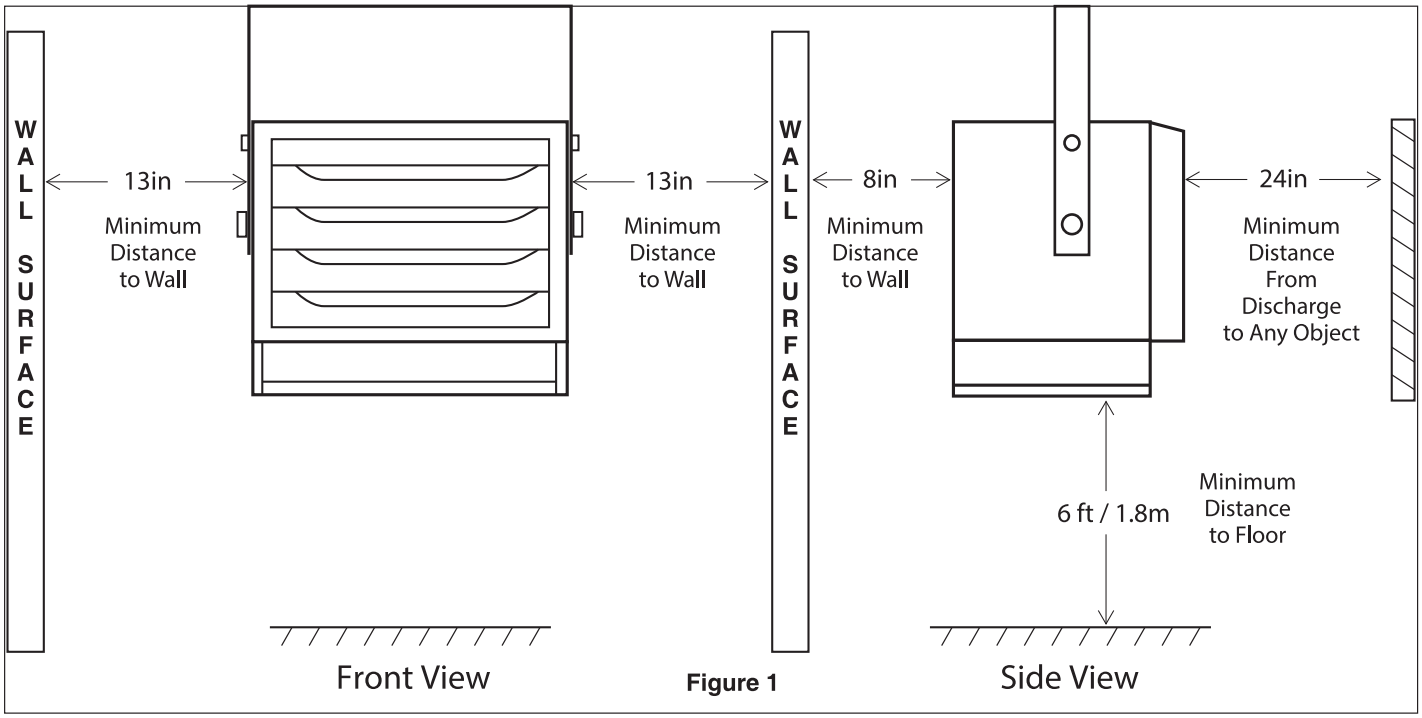

Figure 1

- When more than one heater is used in an area, the heaters should be arranged so that the air discharge of each heater supports the air flow of the others to provide best circulation of warm air, as indicated in **Figure 2**.

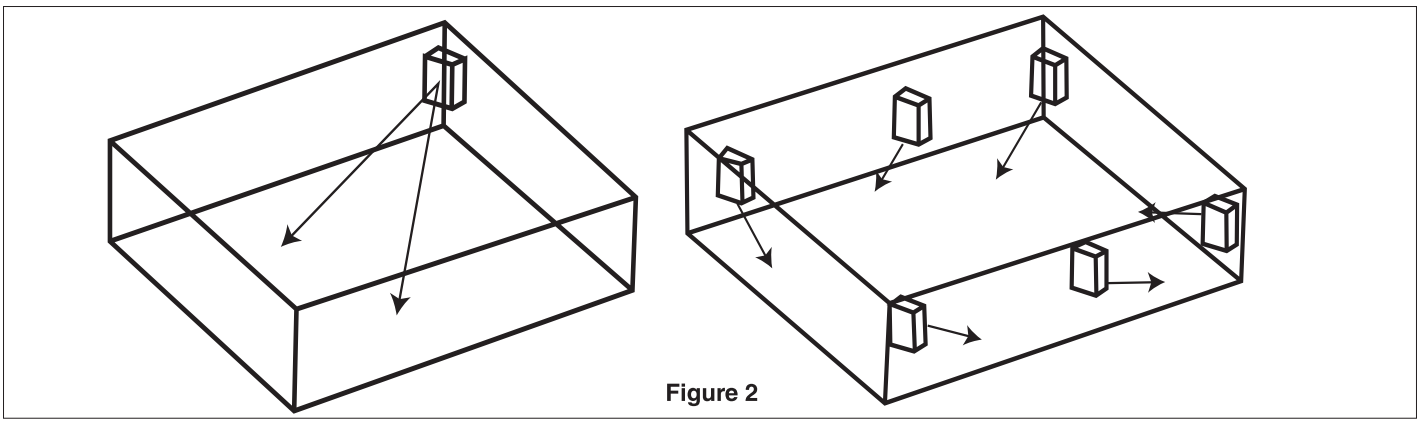

Figure 2

INSTALLATION

For optimal performance, the appliance must be installed correctly. Please follow the assembly instructions strictly. Installation and settings must be carried out by a certified electrician in line with all applicable local, state, and national codes.

Before starting the installation, check that the product and its parts are not deformed or damaged. Make sure that the power supply has been disconnected from the appliance.

MOUNTING THE BRACKET

Tools Required (not included)

• Electric screwdriver • Tape measure • Electric power drill

Hardware Required (included)

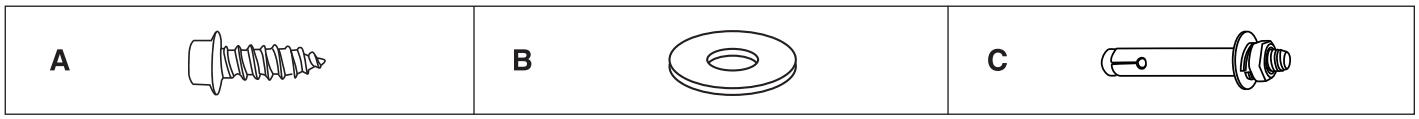

GH10K Smart		
Part	Description	Quantity
A	M8 Lag Bolt	3
B	Washer	3
C	M10 Expansion Bolt	2

GH15K Smart		
Part	Description	Quantity
A	M8 Lag Bolt	4
B	Washer	4
C	M10 Expansion Bolt	4

If you use the mounting bracket, ensure that both the mounting structure and anchoring hardware can reliably support the weight of the heater.

A. Mount the bracket with the **solid wood joist**. Refer to **Figures 3a**.

1. Drill 0.25" pilot hole in the wood joist for the **M8 Lag Bolt(s).**
2. Place the **M8 Lag Bolt(s)** as shown in the **Figures 3a**.

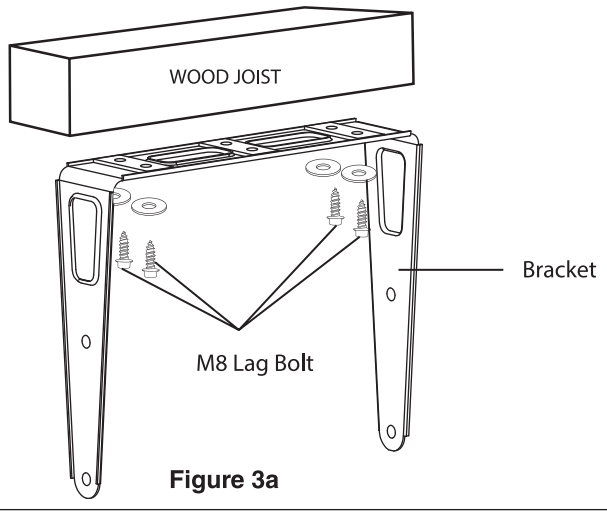

Figure 3a

B. Mount the bracket with the **concrete ceiling**. Refer to **Figures 3b**.

1. Drill 0.47" pilot hole in the ceiling joist for the **M10 Expansion Bolt(s)**.
2. Place the **M10 Expansion Bolt(s)** as shown in the **Figures 3b**.

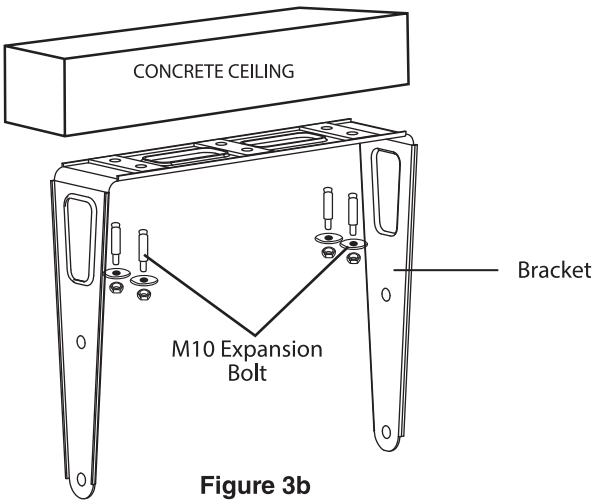

Figure 3b

HANGING THE HEATER IN THE BRACKET

1. Lift the heater into the mounting bracket and align the lower bracket holes with the threaded holes nearest the heater's center.
2. Thread a large knob-screw through the hole on each side of the bracket.
3. Aim the heater horizontally or tilted by aligning the upper bracket holes with the top threaded holes on the heater and secure with the small knob-screws and tighten all (See **Figure 4**).

NOTE: This heater is heavy. It is recommended two or more adults are required to complete this step to prevent damage or injury.

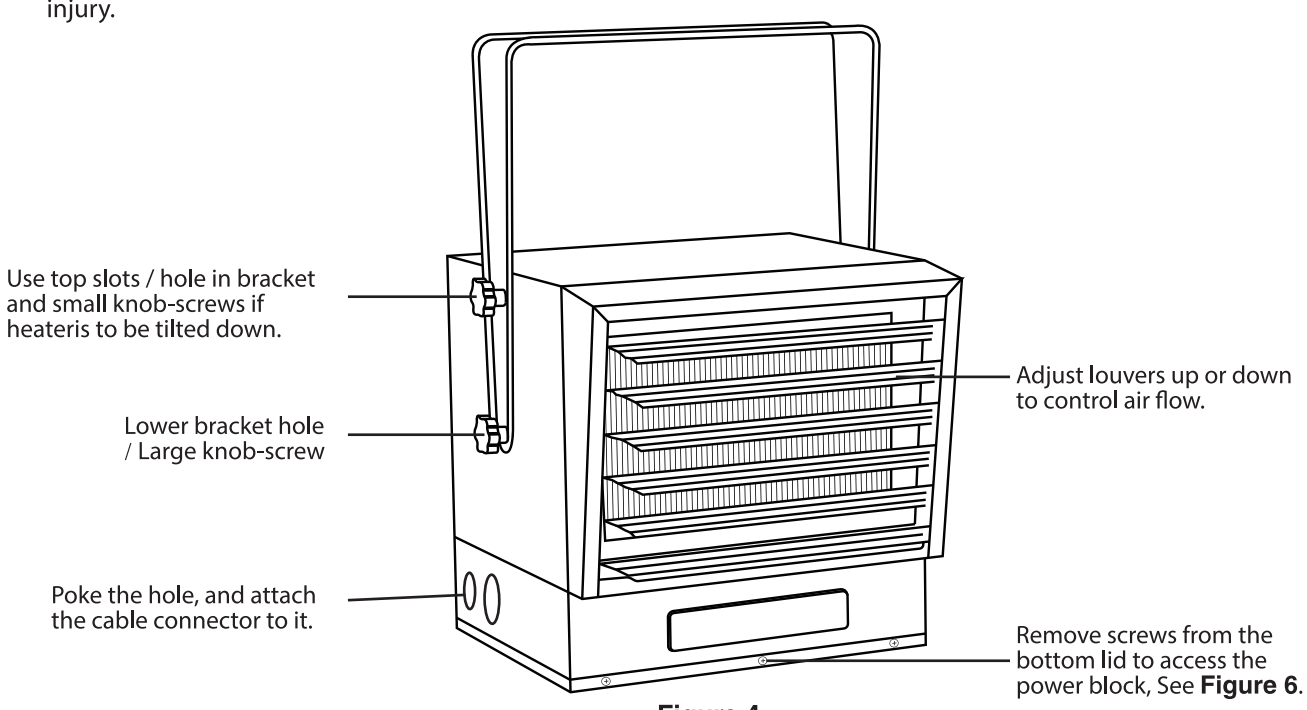

Figure 4

MULTIPLE VERTICAL ANGLES

1. Tilt the unit

Loosen the top Small Knob-Screws and thread them into the provided holes in the heater until tight.

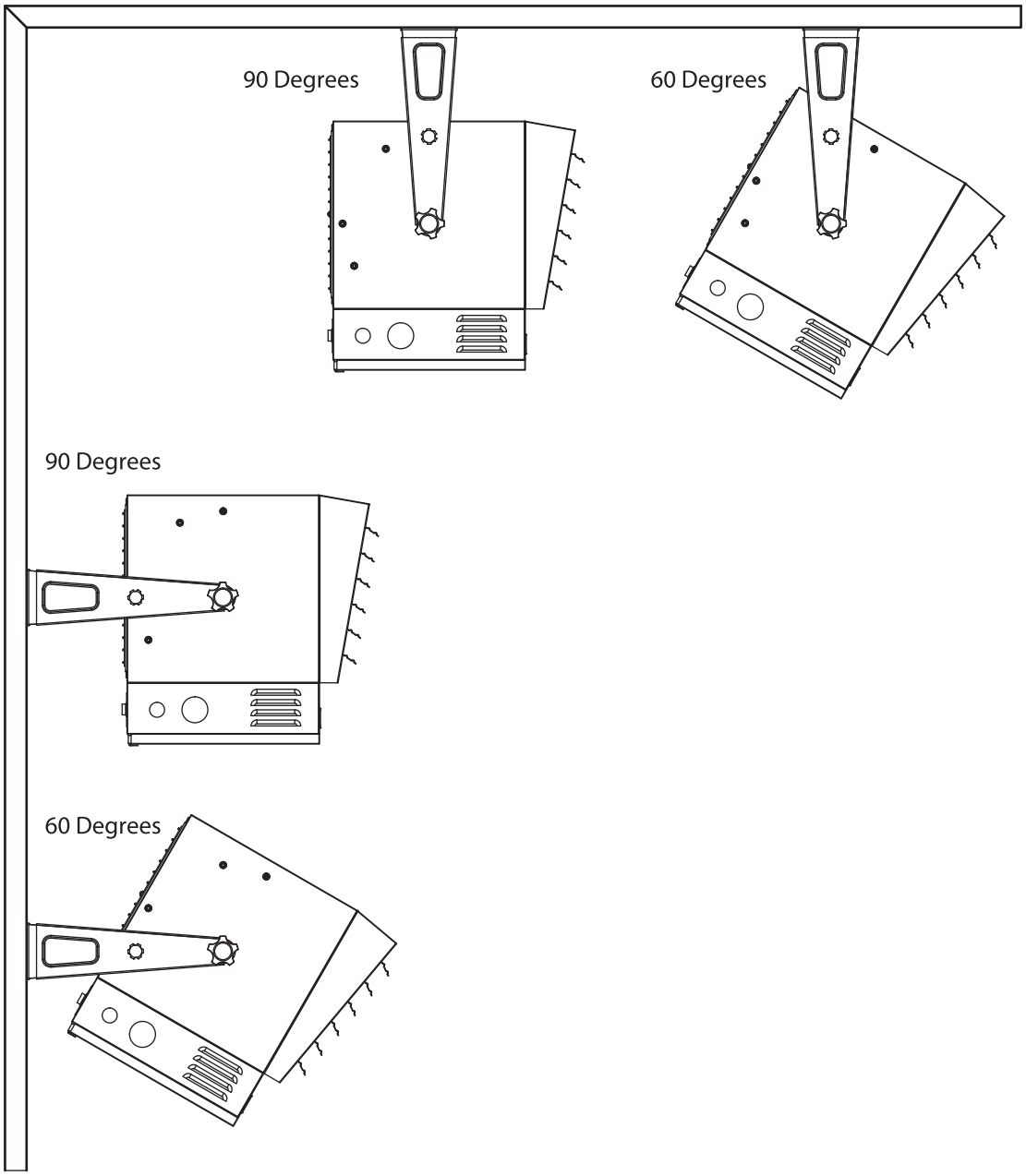

2. Adjust the louvers as desired.

See **Figure 4**.

NOTE: *When the heater is on, please avoid adjusting the louvers with bare hands to prevent burns.*

NOTE: DO NOT OPERATE THE HEATER WITH THE FRONT LOUVERS CLOSED, OTHERWISE CAUSE DAMAGE TO THE HEATER.

CONNECTING THE POWER

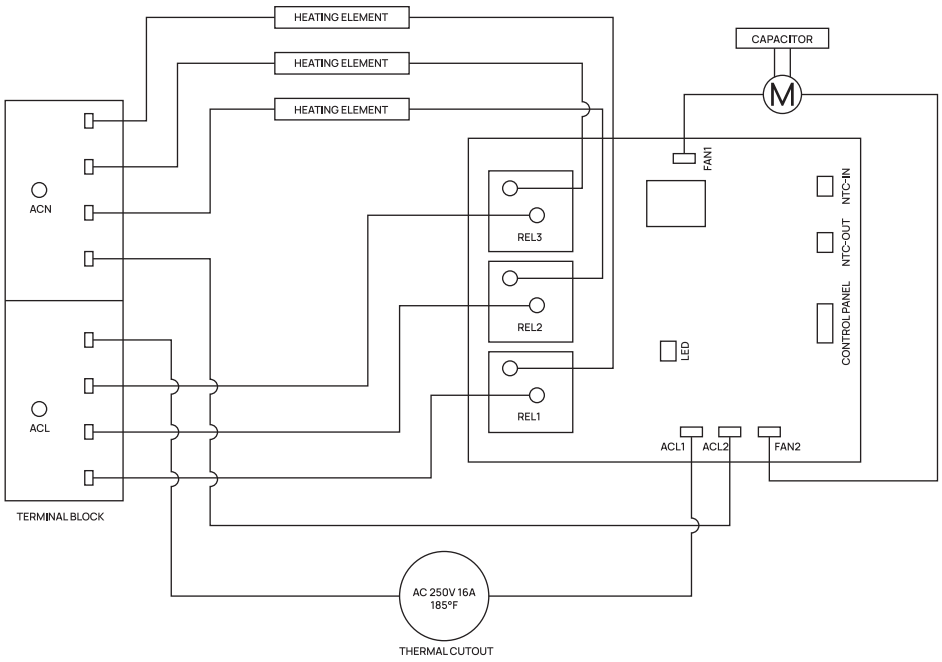

Wiring diagram

Wiring Guide

Please scan this QR code to watch the step-by-step wiring guide.

WARNING: This appliance must be grounded.

WARNING: This appliance must connect to a current protection circuit or device before being connected to the power supply! Refer to SPECIFICATION and NEC / local codes.

NOTE: All wiring must be carried out by a Certified Electrician and must be in accordance with national and local electrical codes in the United States.

1. With the power off at the breaker, remove the screw from the bottom lid to access the power block of the heater (See **Figure 4**).
2. Poke the hole at the side of the heater. Attach the cable connectors to the hole (See **Figure 4**) and slide the wire through the cable connector.

NOTE: For certain applications, conduit may be required (See **Figure 5**). Check the local electrical codes. If you plan to run the wiring in conduit and want the flexibility to adjust the heater's position, make sure to purchase sufficient flexible conduit that allows for easy turning of the heater.

3. Pull enough wire into the heater and connect the wire to the Power Block located in the electrical area of the heater (See **Figure 6**).
4. Must tightly torque all terminal screws and power block lugs. Refer to **SPECIFICATION** and **NEC / local codes**, for the required torque values. Failure to do so may cause overheating.
5. Turn on the power at the main circuit breaker panel.

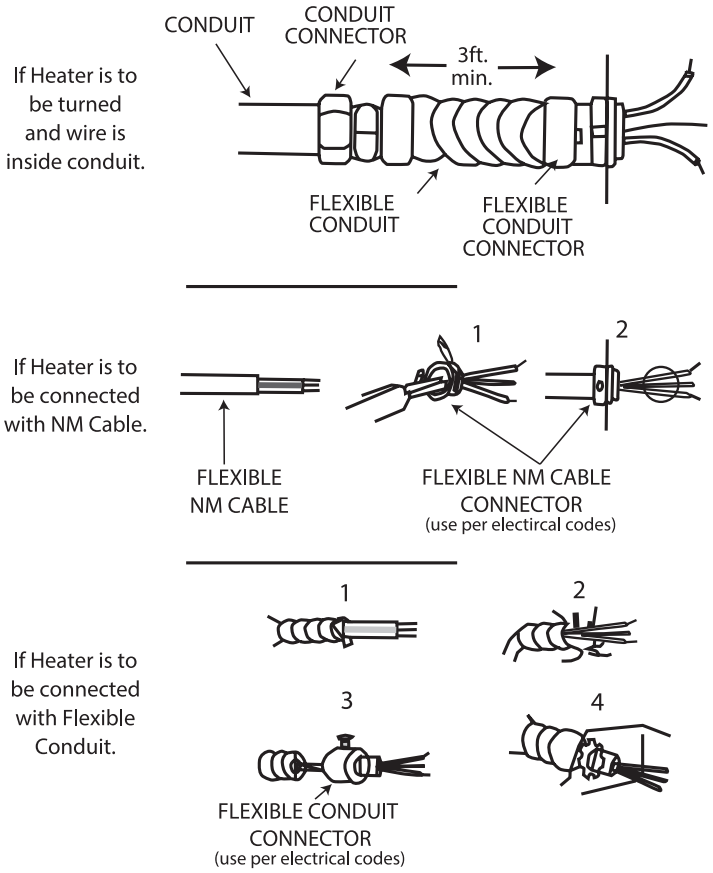

Figure 5

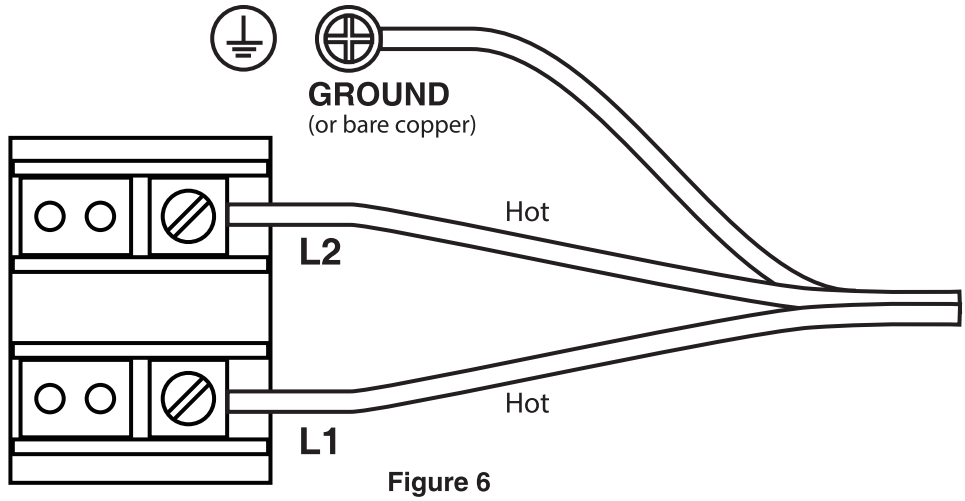

Figure 6

WARNING: It is advised that at the start of each heater season, the power should be turned off at the circuit breaker and the **L1** & **L2** lug screws checked for tightness and proper torque. The heater should be cleaned and checked for mechanical and electrical integrity. See SPECIFICATION and NEC / local codes.

WARNING: After completing all wiring, the bottom lid must be installed before use. Otherwise, foreign objects entering the circuit may cause short circuits, machine malfunctions, or abnormal overheating protection.

OPERATING

WARNING: The heater must be properly installed before use.

Control Panel

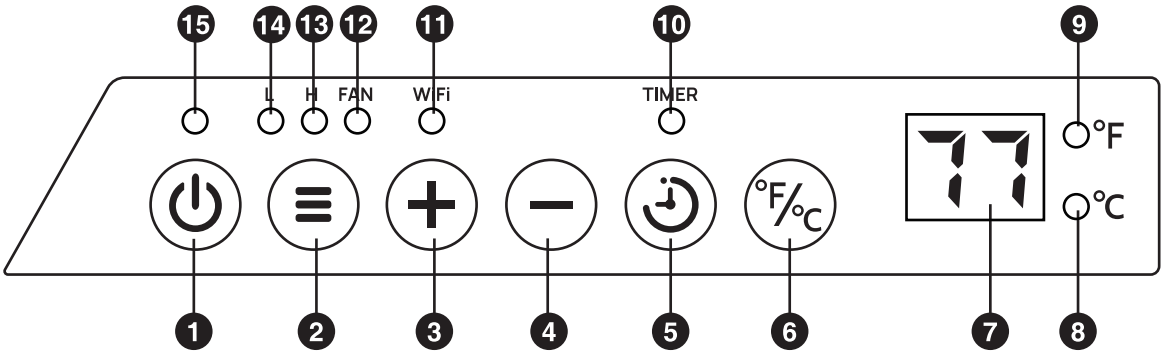

1.Power Button 2.Mode Button 3.Temperature + Button 4.Temperature - Button 5.Timer Button 6.°F/°C Switch 7.Display Screen 8.°C Indicator 9.°F Indicator 10.Timer Indicator 11.WiFi Indicator 12. Fan Indicator 13.High Heat Indicator 14.Low Heat Indicator 15.Power Indicator

When the heater is connected to power, it emits a long beep and all indicators light up for 1 second and then turn off, and the power indicator remains solid yellow.

Power Button

- When the heater is connected to power, it emits a long beep and all indicators light up for 1 second and then turn off, and the power indicator remains solid yellow.
- Press this button to turn on the heater. The heater will beep once, the power indicator will turn solid red, and the digital display will show the ambient temperature.
- The default temperature setting is 80°F/27°C. If the ambient temperature is below the set temperature, the heating function will activate, and the fan will turn on. If the ambient temperature is higher than the set temperature, neither the heating function nor the fan will turn on, and the digital display will flash.
- Press the Power Button to turn off the heater. The fan will continue to run for 90 seconds to blow out any remaining heat, and the screen will display a countdown. If the fan was not running, the digital display will go blank. The power indicator will remain solid yellow.

Mode Button

- Press the Mode button to cycle through the three modes: L (Low Heat) - H (High Heat) - Fan(Fan Only). With each press, the heater will beep once, the digital display will flash the corresponding selection (L, H, or FA), and the corresponding mode indicator will remain solid on. Once the mode is set, the digital display will flash for 5 seconds before reverting to the real-time ambient temperature display.

Temperature + & Temperature - Button

- NOTE: The "+" and "-" button only work in L or H mode, they are inactive in Fan mode.
- Press the Temp + or Temp - button to adjust the temperature setting between 45°F and 95°F (7°C and 35°C). Refer to the table for detailed temperature setting instructions.
- When setting the temperature, the screen will display the set temperature. Once the temperature is set, the screen will flash for 5 seconds before returning to display the ambient temperature.

Fahrenheit Temperature	45°F	46°F	47°F	···	93°F	94°F	95°F
Display	45	46	47	···	93	94	95
Celsius Temperature	7°C	8°C	9°C	···	33°C	34°C	35°C
Display	07	08	09	···	33	34	35

NOTE: The heating function activates only if the set temperature is higher than the ambient temperature.

Timer Button

- In operating mode: Controls the duration the heater will run before turning off.
- In standby mode: Sets the time for the heater to turn on.
- Press the Timer button to activate the timer function; the timer indicator will light up. Press again to cycle through different timer settings. Refer to the table for detailed timer-setting instructions.

Timer Interval	1 Hour	2 Hours	3 Hours	4 Hours	···	11 Hours	12 Hours	OFF
Display	1	2	3	4	···	11	12	0

- When setting the timer, the screen will display the set time. After the time is set, the screen will flash for 5 seconds before returning to display the ambient temperature, and the timer indicator will remain lit.
- In standby mode: As the countdown reaches 1 hour, it will display minutes in descending order (e.g., 59--58--57... 02...01) until the heater turns on.

NOTE: The timer function should not be used as an excuse to leave the heater unattended.

°F / °C Switch Button

- Press this button to switch between Fahrenheit (°F) and Celsius (°C). The appropriate °F or °C indicator will light up based on your selection.
- Press and hold this button for 3 seconds to turn the LED light on or off.

Display Screen

- Displays information about the settings you are using.
- After adjusting the settings, the screen will return to display the ambient temperature without any action in 5 seconds.

Automatic Shutoff

- During heating, once the set temperature is reached, the device will automatically stop heating, the fan will stop after a 90-second delay, and the digital display will flash to show the ambient temperature. If the ambient temperature drops to 4°F (2°C) below the set temperature, the device will resume heating, and the fan will turn on after a 3-second delay.

NOTE: The heater will cycle on and off to maintain the set temperature.

Remote Control

The remote control can be used up to 13.1 feet (4 meters) away from the heater, so long as there are no obstructions between the remote control and the heater. The remote can control all the settings as the control panel does.

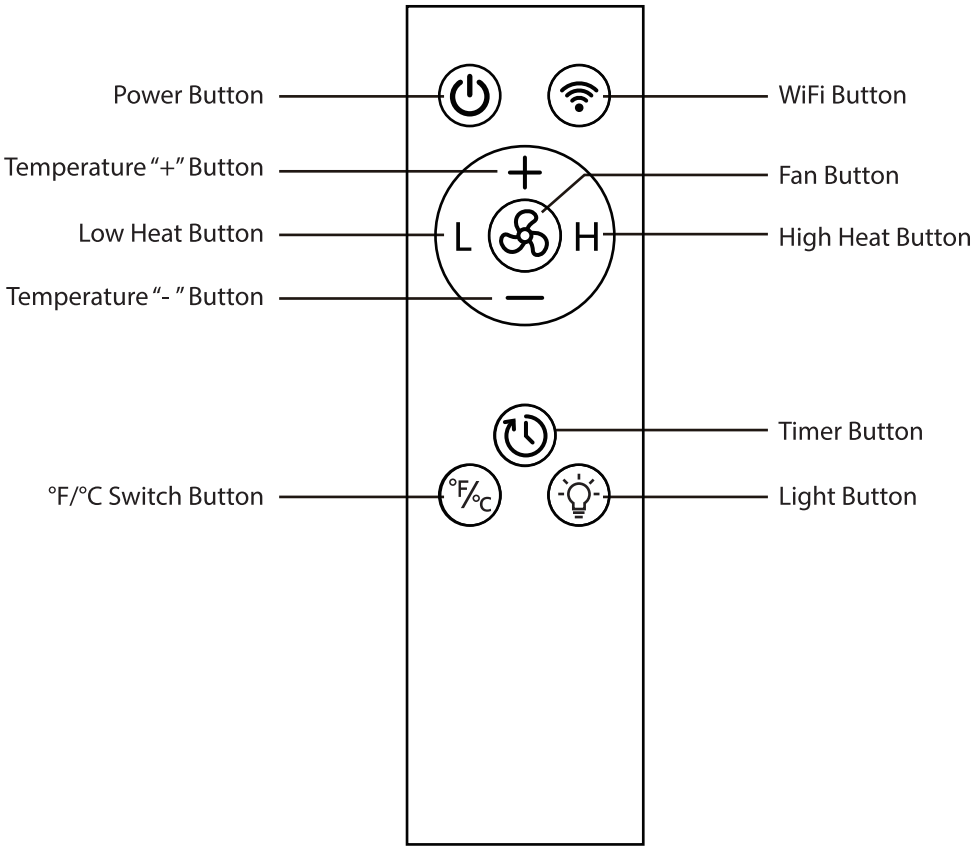

Remote Control Batteries

Press and slide the battery cover on the rear of the remote and remove the cover. Insert two new AAA 1.5V batteries into the battery compartment. Ensure that the polarity is correct. Batteries are **not included** in the package due to safety during transportation.

NOTE: Do not mix old and new batteries together in the remote. Do not mix alkaline, standard (carbon-zinc), or rechargeable (NiCad, NiMh, etc.) batteries together.

DISPOSAL OF USED BATTERIES

Battery may contain hazardous substances which could endanger the environment and human health.



This symbol marked on the battery and or packaging indicates that used battery shall not be treated as municipal waste. Batteries should be disposed of at an appropriate collection point for recycling. By ensuring the used batteries are disposed of correctly, you will help prevent potential negative consequences for the environment and human health. The recycling of materials will help to conserve natural resources. For more information about the recycling of used batteries, please contact your local municipality waste disposal service.

THE Wi-Fi CONNECTION

Preparation before connecting:

- Make sure your Wi-Fi router supports 2.4GHz (NOT 5.0GHz) and 802.11b/g/n bands.

  Note: Most 5.0GHz routers can also be set to 2.4GHz band or dual band.

- Make sure your smartphone or tablet supports a 2.4GHz network.

A. Scan the QR code below or search 'AIR.ai' on App Store or Google Play and download it.

AIR.ai

GET IT ON Google Play

Download on the App Store

B. Launch the AIR.ai App and log in to your account (sign up for your first use).

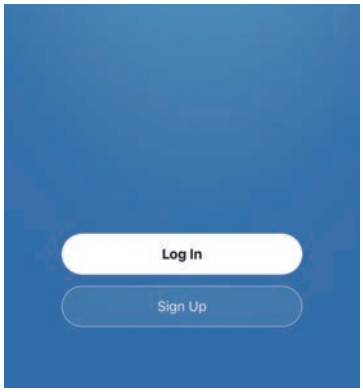

C. Turn on the Bluetooth of your smartphone or tablet and connect to your Wi-Fi.

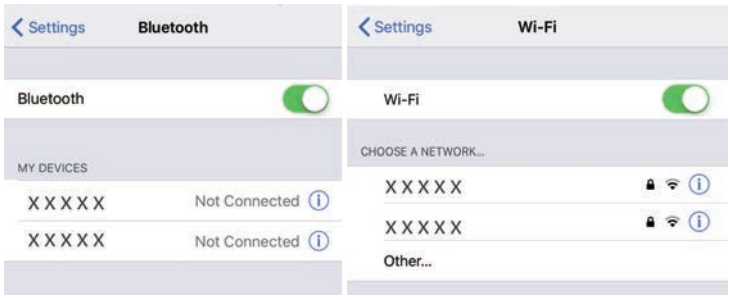

D. Make sure the heater is connected to power and is in standby mode (not power on). Press and hold the Power button on the control panel or the Wi-Fi button on the remote control for 5s to enter the Wi-Fi pairing mode, the heater will emit a long beep and the Wi-Fi indicator will flash. Once the Wi-Fi connection is successful, the Wi-Fi indicator light will stay solid on.

If pairing is not successful within two minutes, the Wi-Fi indicator light will turn off. You will need to press and hold the Power button for 5 seconds again to re-enter Wi-Fi pairing mode.

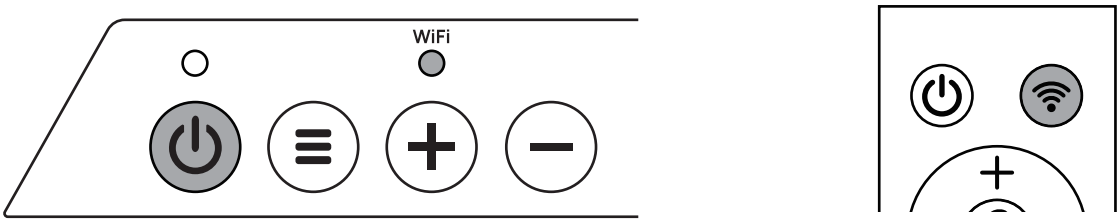

E. Back to the AIR.ai App. Press the '**+**' button in the top right corner, and click ' **Add Device**'. The App will search for the heater automatically.

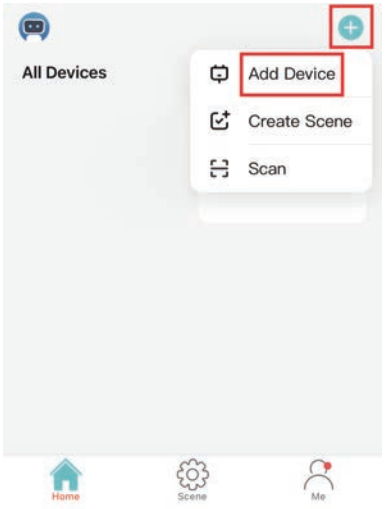

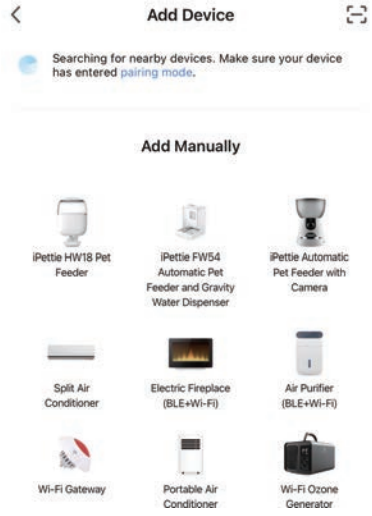

F. Press the '**Add**' button to add your device.

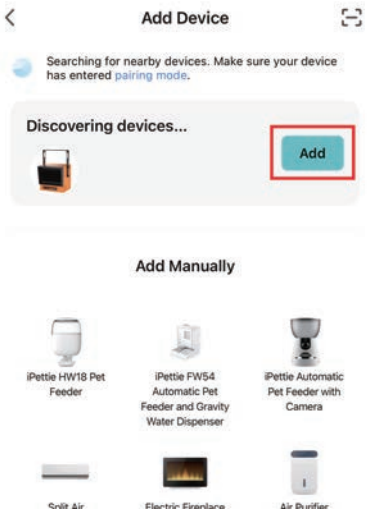

G. Choose your Wi-Fi (the one your phone is connected to) and enter the password. Press the '**Next**' button to continue.

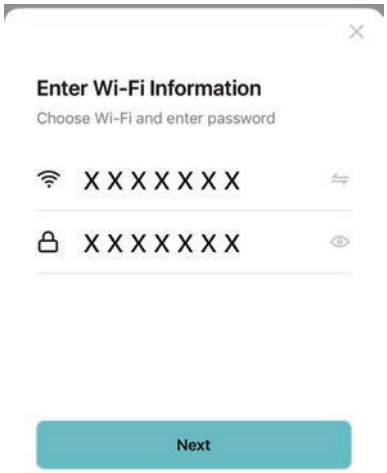

H. The AIR.ai App starts connecting to your device. It may take some time, please wait patiently. Press the '**Done**' button, you will find your heater in the device list. You can rename your device and get started now.

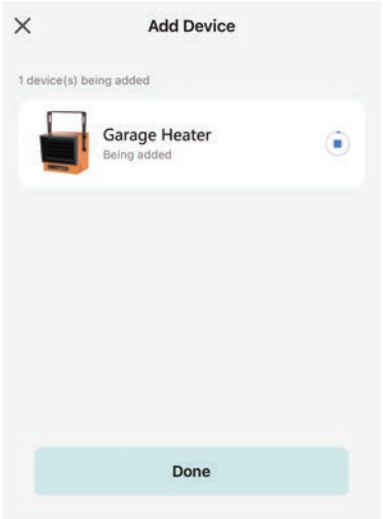

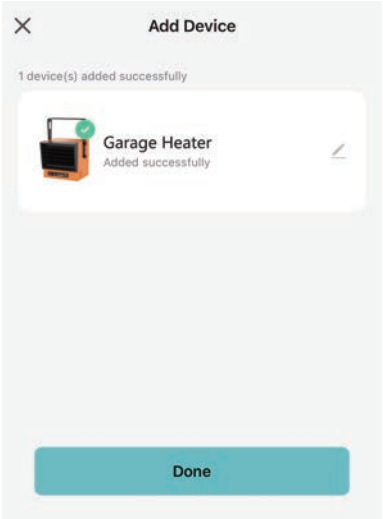

FCC WARNING

15.19 Labeling requirements.

This device complies with part 15 of the FCC Rules. Operation is subject to the following two conditions: (1) This device may not cause harmful interference, and (2) this device must accept any interference received, including interference that may cause undesired operation.

15.21 Information to user.

Any Changes or modifications not expressly approved by the party responsible for compliance could void the user's authority to operate the equipment.

15.105 Information to the user.

Note: This equipment has been tested and found to comply with the limits for a Class B digital device, pursuant to part 15 of the FCC Rules. These limits are designed to provide reasonable protection against harmful interference in a residential installation. This equipment generates uses and can radiate radio frequency energy and, if not installed and used in accordance with the instructions, may cause harmful interference to radio communications. However, there is no guarantee that interference will not occur in a particular installation. If this equipment does cause harmful interference to radio or television reception, which can be determined by turning the equipment off and on, the user is encouraged to try to correct the interference by one or more of the following measures:

- Reorient or relocate the receiving antenna.
- Increase the separation between the equipment and receiver.
- Connect the equipment into an outlet on a circuit different from that to which the receiver is connected.
- Consult the dealer or an experienced radio/TV technician for help.

FCC RF Radiation Exposure Statement:

1.This Transmitter must not be co-located or operating in conjunction with any other antenna or transmitter.

2.This equipment complies with RF radiation exposure limits set forth for an uncontrolled environment.

This equipment should be installed and operated with minimum distance 20cm between the radiator and your body.

IC Warning

This device complies with Industry Canada’s licence-exempt RSSs. Operation is subject to the following two conditions:

(1)This device may not cause interference;

(2)This device must accept any interference, including interference that may cause undesired operation of the device.

The information listed above provides the user with information needed to make him or her aware of a RF exposure, and what to do to assure that this radio operates within the FCC exposure limits of this radio.

The device complies with RF specifications when the device used at 20cm from the body.Third-party belt-clips, holsters, and similar accessories used by this device should not contain any metallic components. Body-worn accessories that do not meet these requirements may not comply with RF exposure requirements and should be avoided. Use only the supplied or an approved antenna.

CLEANING & MAINTENANCE

Cleaning and user maintenance shall not be made by persons with reduced physical, sensory, or mental capabilities, or lack of experience and knowledge unless they have been given strict supervision or instruction concerning the use of the appliance by a person responsible for their safety.

Before cleaning, make sure the heater is OFF and has been disconnected from the power at the circuit breaker and that the heating element of the heater is cool.

It is recommended to clean the machine every 3 months. If the heater operates in a dusty environment, more frequent cleaning is recommended.

- DO NOT disassemble the heater to clean it.
- Use a vacuum or duster to remove dust and dirt from the heater and vent areas.
- Clean with a soft, damp cloth and buff with a dry cloth to maintain the luster of this product.
- NEVER use abrasive cleaners, liquid sprays, or any cleaner that could scratch the surface of the appliance.
- During summer or at other times when the appliance is not in use, disconnect the power supply, and cover the whole appliance with a dust cloth. Moreover, keep the appliance in a dry and cool place.
- All other servicing should be performed by **qualified service personnel.** DO NOT try to repair the heater yourself.
- Always demand original spare parts for repairs.

TROUBLESHOOTING

Error Code	Possible Cause(s)	Recommended Solution
E1	1. Overheat safety cut-off. 2. Temperature sensor is loose or damaged.	DISCONNECT THE POWER! 1. Ensure the heater has sufficient clearance all around (**see Figure 1**). 2. Check the temperature sensor and re-tighten it. If the issue persists, contact the TURBRO service team.
E2	Temperature sensor open circuit.	DISCONNECT THE POWER! • Contact the TURBRO service team.
E3	Temperature sensor short circuit.	DISCONNECT THE POWER! • Contact the TURBRO service team.

WARRANTY INFORMATION

This 1-year limited warranty is extended to the original purchaser of this product and warrants against any defect in materials and workmanship under normal use and conditions, for a period of one year from the date of the original purchase, subject to the conditions and limitations outlined below.

This warranty is non-transferable to any subsequent owner of the product regardless of whether the product is transferred during the specified term of the warranty.

THIS LIMITED WARRANTY IS GIVEN TO THE PURCHASER IN LIEU OF ALL OTHER WARRANTIES, EXPRESSED OR IMPLIED, INCLUDING BUT NOT LIMITED TO THE WARRANTIES OF MERCHANTABILITY OF FITNESS FOR A PARTICULAR PURPOSE.

What is covered?

- TURBRO's warranty extends only to products purchased from authorized sellers that are subject to TURBRO's quality controls and have agreed to follow its quality controls.
- This warranty is limited to the repair or replacement of part(s) proved to be defective in material or workmanship after said defect is confirmed by the manufacturer's inspection.
- The manufacturer may, at its discretion, fully discharge all obligations with respect to this warranty by refunding the wholesale price of the defective part(s).

UPON THE EXPIRATION OF THIS WARRANTY, ALL SUCH LIABILITY WILL TERMINATE. NO OTHER WARRANTIES ARE EXPRESSED OR IMPLIED ANYMORE.

Some states do not allow limitations on how long an implied warranty lasts, so the above limitations may not apply to you.

What is not covered?

- Damage or losses caused by any alterations or unauthorized repair made to the product by the owner.
- Damage or losses caused by accident, neglectful operation, misuse, abuse, or use contrary to the user manual and safety guidelines.
- Damage or losses occurring during commercial use, rental use, or any use for which the product is not intended.
- Damage or losses caused by improper or inadequate maintenance.
- Failure to perform general maintenance (including cleaning).
- Use of non-standard parts or accessories.
- Natural depreciation and normal wear and tear.

TURBRO SHALL NOT BE LIABLE FOR ANY INCIDENTAL OR CONSEQUENTIAL DAMAGES FOR BREACH OF ANY EXPRESS OR IMPLIED WARRANTY ON THIS PRODUCT, EXCEPT TO THE EXTENT PROHIBITED BY APPLICABLE LAW.

Some states do not allow the exclusion or limitation of incidental or consequential damages so the above limitation or exclusion may not apply to you.

How to request warranty services?

To obtain the benefit of this warranty please leave a message online (www.turbro.com/contact), or send an email to support@turbro.com.

To express our gratitude to you for choosing us, we are giving you a 1-year warranty extension to the original 1-year manufacturer's limited warranty, extending the coverage period to two years in total.

- Complete the registration of your new product at https://www.turbro.com/warranty within 90 days from the date of package delivery (inclusive of the 90th day).
- Any registration beyond this stipulated period will be deemed invalid.
- The ultimate interpretation of the terms and conditions related to the extended warranty service rests solely with TURBRO.

If you discover that your product is defective within the specified warranty period, please contact our Customer Support via support@turbro.com.

- Order ID and invoice, or bill of sale should be provided. Such payment records must be kept to verify the purchase date and establish a warranty period.
- Model and issue description should be provided in detail, preferably with pictures and videos.
- DO NOT dispose of your product before contacting us.
- DO NOT return the product unless instructed by our customer service.
- The original carton should be kept in case of warranty return of the unit.

What will TURBRO do?

- Replace certain parts.
- Replace the item.
- Refund the item under certain circumstances.

In no event shall liability exceed the purchase price paid by the original purchaser of the product.

Any instructions or warranty included in this manual may be subject to change without notice. For the most up-to-date instructions and warranty information, please contact us via support@turbro.com.

TURBRO

support@turbro.com

www.turbro.com

V20260730