DREO | Smart Misting Fan
765S

USER MANUAL

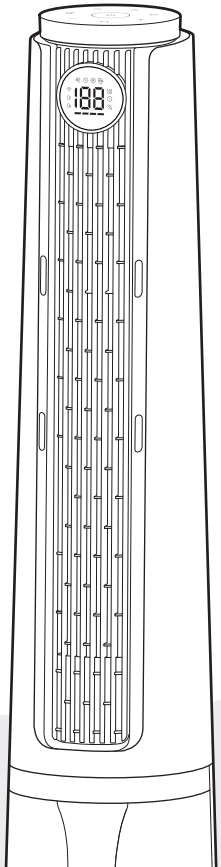

Thanks for Choosing DREO!

Your support means the world to us.
We hope you enjoy our product as much as we did creating it.

CONTENTS

01
ASSEMBLING YOUR APPLIANCE
1-4

02
CONNECTING TO YOUR APPLIANCE
5

03
KNOWING YOUR APPLIANCE
6-8

04
USING YOUR APPLIANCE
9-11

05
CLEANING AND MAINTENANCE
12-17

06
TROUBLESHOOTING
18-19

ASSEMBLING YOUR APPLIANCE

01

Assembly Instructions

When using the appliance for the first time, remove the wraps and attach the parts by following the steps below.

❶

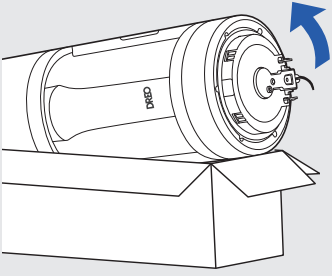

Place the bottom end of the appliance on top of the carton box.

❷

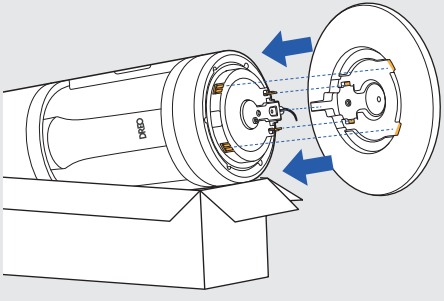

Align the two holes on the base with the two insert pins on the bottom of the appliance.

❸

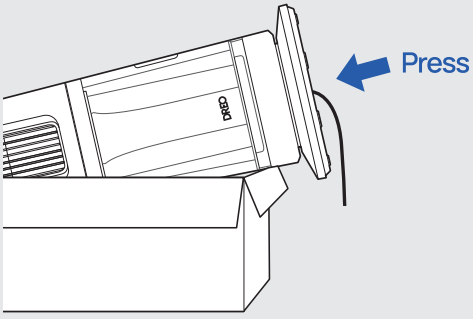

Press the base until you hear a **click**.

❹

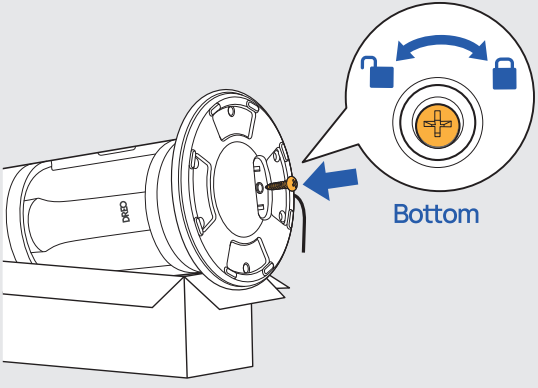

Fix the base with the screw.
Note: Please find the screw in the bag taped to the base.

CAUTION
- Do not operate the appliance if the base has not been installed.

Package Contents

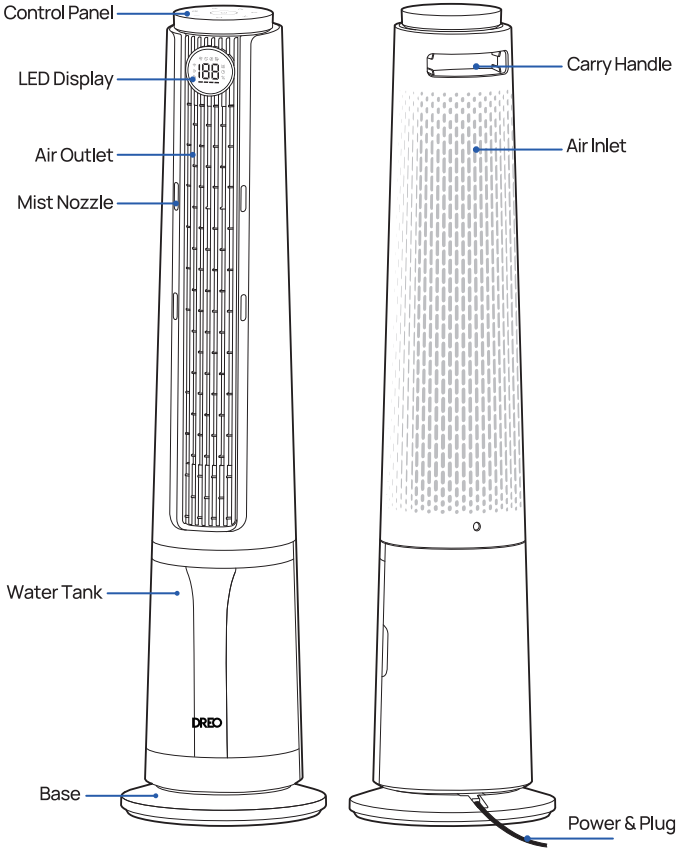

Water Tank

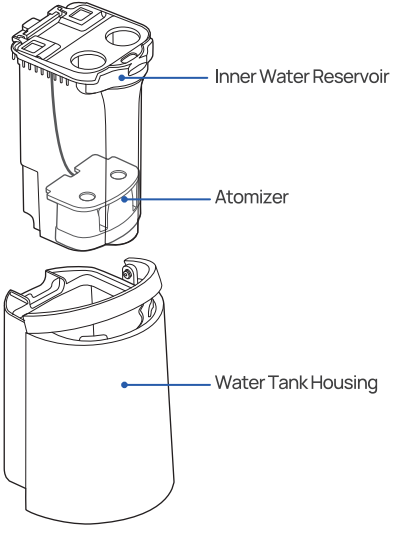

User Guide

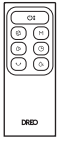

Remote Control



2 x AAA Batteries

CONNECTING TO YOUR APPLIANCE

02

Before connecting the appliance to your mobile device, please scan the QR code on the left or go to the app store and search **"DREO"**, then select and download the app.

Download on the App Store

GET IT ON Google Play

Look for "Smart Misting Fan 765S" when connecting your new appliance.

You can use the DREO app to connect your appliance to **Amazon Alexa** or **Google Home**. Please follow the in-app instructions to set up your voice assistant.

NOTE: You must create a DREO account to access voice assistants.

1. Launch DREO and sign in or create an account by following in-app instructions.
2. Enable Bluetooth on your smartphone and plug in your appliance.
3. Hold 5s for 5 seconds to start WiFi connection settings.
   (Note: The WiFi icon will keep flashing when pairing.)
4. Tap **+Add Device** and select **Smart Misting Fan 765S**.
5. Follow in-app instructions to complete the WiFi connection.
6. You're now ready to control the appliance on your app.
   (Tip: To restart connection settings, hold 5s again for 5 seconds)

KNOWING YOUR APPLIANCE

03

Control Panel



Power Button
- Turn power on/off.



Mode Button
- Switch between Normal/Sleep/Auto/Turbo Mode.
- Long press for 3 seconds to mute/unmute.



Decrease Button
- 1-12 speed levels.



Increase Button
- 1-12 speed levels.



Timer Button
- Select to set a timer (0-12h).
- Long press for 3 seconds to turn the humidity indicator light on/off.



Mist Level Button
- Adjust mist levels across 0-4 levels.



Auto Humidity Button
- When first activated, the screen will display the target humidity.
- Tap to increase the target humidity by 5% (target humidity ranges from 40% to 90%).
- When enabled, the appliance will adjust the mist level automatically according to your target humidity.



Oscillation Button
- Adjust airflow direction.
- Long press for 5 seconds to start network settings and device pairing.

Note: When the fan is on standby, long press 5s and 3s for 10 seconds to turn off WiFi connection and enter Low Power Standby Mode.

LED display

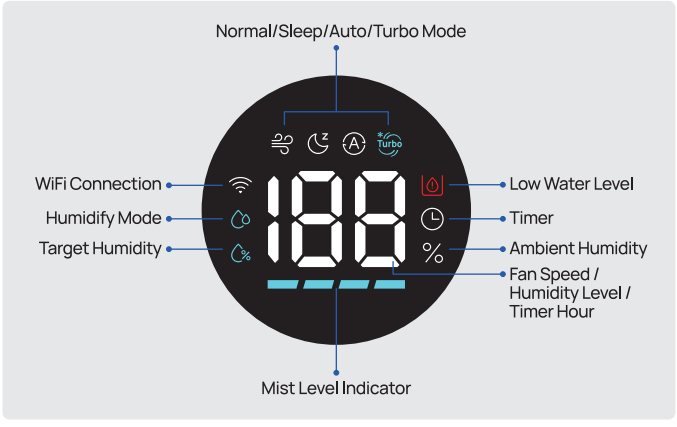

Humidity Indicator Light

The indicator light will change according to your room humidity level.

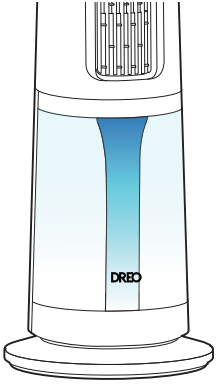

Light Color	Humidity Level
Blue	≥71%
Green	31-70%
Orange	≤30%

Getting the Most Out of Your Appliance

Environment Condition	Recommended Fan Speed Levels	Recommended Mist Levels	How It Feels
Air-Conditioned Room 25-26°C/77-79°F, ~60% Humidity	**1-8**	**1-2**	Gentle cooling with light moisture for indoor comfort
Hot & Dry 32-33°C/89.5-91.5°F, ~40% Humidity	**9-12**	**3-4**	Strong airflow mist for a refreshing relief
Hot & Humid 32-33°C/89.5-91.5°F, ~80% Humidity	**9-12**	**OFF**	Best with a window open, it brings a fresh breezy feel
Extra Hot ~35°C/95°F, ~60% Humidity	**Turbo** Additional fan & mist level boost beyond max settings.		Full-power cooling and misting when heat peaks

Note:
- Place the appliance about 5 ft. (1.5 m) away for the best cooling performance.
- Turn on oscillation or place the appliance sideways for more even cooling.

USING YOUR APPLIANCE

04

Before Use

When using your appliance for the first time, follow the steps below.

1



Detach the water tank from the base.

2

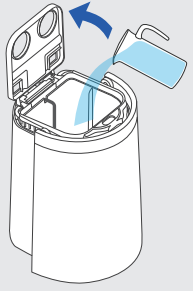

Remove the cardboard first before filling the tank.
Open the inner water reservoir lid and fill the tank with room temperature water.

3

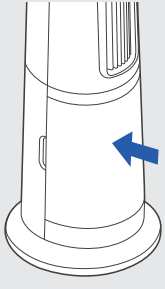

Return the water tank to its original position.

4

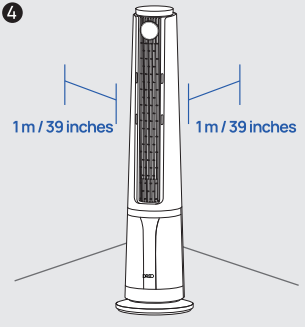

Place the appliance on a flat, level surface, keeping at least 1 m / 39 inches away from walls or any major obstacles.

ATTENTION:

- It is recommended to add purified or distilled water to prevent white powder residue from forming.
- Do not add essential oil into the water tank to avoid damage to the tank.
- Do not place the appliance on the carpet or floor directly.
- Direct the mist away from walls, furniture and electrical appliances.
- It is recommended to place a water-resistant mat under the appliance to catch spills and droplets.

Working Modes

Normal Mode	Fan runs at the fixed speed.
Sleep Mode (Mute auto on)	Balance comfort and noise by automatically decreasing fan speed as you fall asleep. If the fan speed is 4 or higher, it will decrease two times at most, one speed every 30 minutes, then it will remain constant. If the fan speed is 3 or lower it will remain constant.
Auto Mode	Fan automatically increases speed when room temp is higher and decreases speed when temp is lower.
Turbo Mode	Fan & mist run at the maximum level.

Additional Features

Timer

When the appliance is ON/OFF, touch repeatedly to set a timer (0-12h). When the timer ends, the appliance will stop/start running automatically. To cancel, set the time to 0 hour.

Note: When the auto off timer is enabled, display will return to fan speed after 3 seconds.

Child Lock(Available in the DREO app)

Use the DREO app to activate / deactivate the Child Lock function. When activated, all the buttons on the appliance will be locked.

Note: Child Lock doesn't apply to operations from the remote control. You can also turn off Child Lock by re-plugging in, or resetting to factory settings.

Memory

If the appliance is turned OFF or disconnected from power, it will operate under the previous settings (except the Timer setting and the Child Lock function) when it is turned ON again.

Countdown Display

When long pressing buttons for Factory Reset, WiFi Connection, Child Lock, and Humidify, a countdown will show on the display accordingly.

Firmware Update

Check the firmware version on the DREO app and update regularly for the appliance to work more efficiently.

Note: Display will show "UP" during the update process. Do not operate until the update is completed.

Display Auto Off

Display turns off after 1 minute (after 5 seconds in sleep mode).
Wake up the display with any button.
To disable this feature, please go to the DREO app.

Remote Control

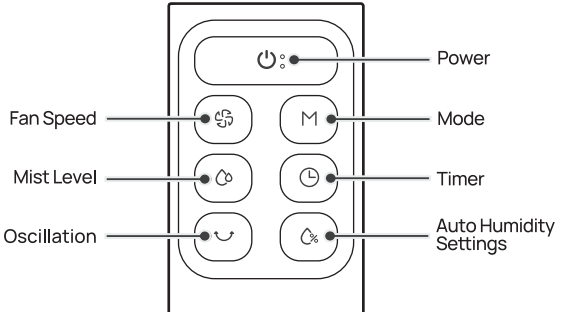

CLEANING AND MAINTENANCE

05

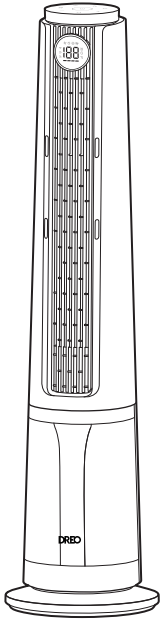

Outer Surface
Gently wipe off the dust with a soft, dry cloth.

Grilles & Blades
Remove the dust using a vacuum or air duster.

Base
The base can be disassembled in the reverse order of assembly.

NOTE:
Hard water may cause mineral buildup. To clean, soak the water tank and atomizer body (excluding the cable and head) in a citric acid solution, then gently wipe the mist nozzles with a soft, damp cloth.

CAUTION

1. Always unplug the appliance before any cleaning or maintenance to avoid the risk of fire, electric shock, or injury to persons.
2. Do not immerse in water or get water inside the motor housing.
3. Do not use any chemical agents when cleaning the appliance.
4. Store in a cool, dry place and cover it to protect from dust.
5. Do not let water splash into the air outlets.
6. Empty and clean the appliance before storage. Clean the appliance before next use.
7. Do not overfill the water tank due to the potential risk of electric shock.

Rear Grille

WARNING
- Turn off the appliance and unplug before any cleaning and maintenance.
- Always remove the water tank before cleaning the rear grille to prevent accidental water contact with electrical components.

❶

Remove the screw at the bottom of the rear grille with a Phillips screwdriver.

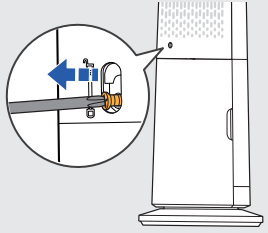

❷

Take the rear grille out.

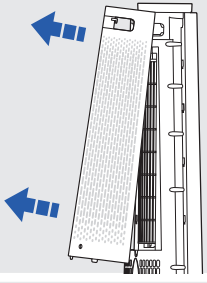

❸

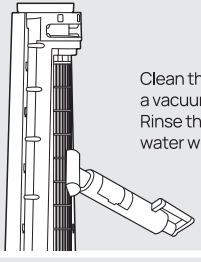

Clean the dust on blades using a vacuum cleaner or air duster. Rinse the rear grille under running water with a clean, damp cloth.

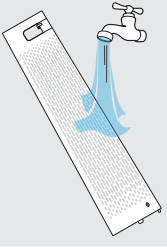

❺ Dry up, then install the grille and the screw back by following the reverse order of disassembly.

Water Tank

WARNING
DO NOT expose the atomizer head or cable to water, as this may lead to malfunction or electric shock.

1

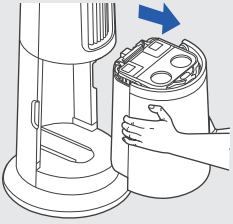

Remove the water tank from the base.

2

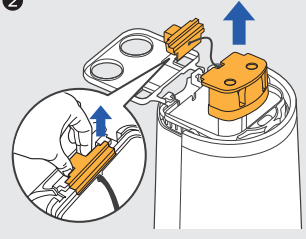

Carefully pull the atomizer out of the slot in the inner water reservoir.

3

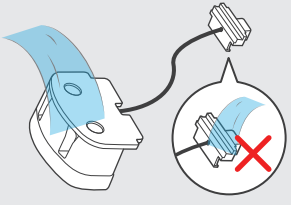

Rinse the atomizer.

WARNING: DO NOT expose the atomizer head or cable to water, as this may lead to malfunction or electric shock.

4

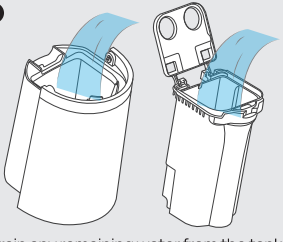

Drain any remaining water from the tank. Take out the inner water reservoir from the tank housing and rinse both parts with clean water.

5

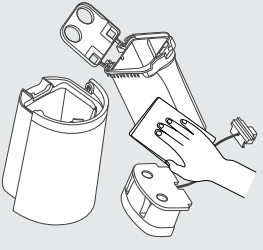

Dry all parts with a cloth.
Make sure all parts are completely dry before reassembling or storing.

Descaling

RECOMMENDED ONCE A MONTH

❶

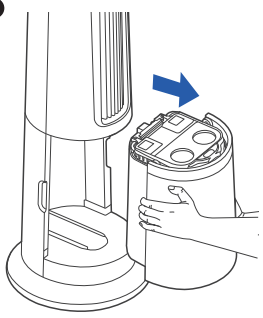

Remove the water tank from the base.

❷

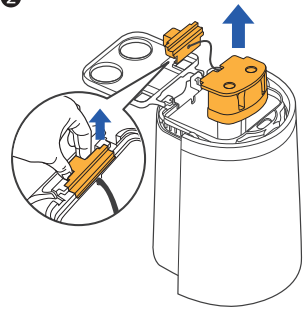

Carefully pull the atomizer out of the slot in the inner water reservoir.

❸

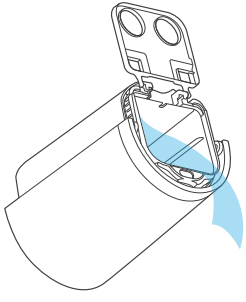

Drain any remaining water from the tank.

❹

15-20min

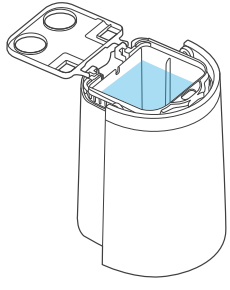

Fill the tank with a solution of 2% citric acid. Let it sit for 15-20 minutes.

5

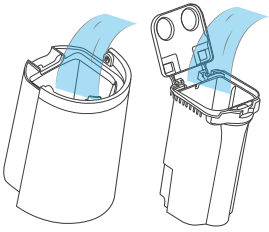

Drain any remaining solution from the tank. Rinse it with water until the bleach smell is gone.

6

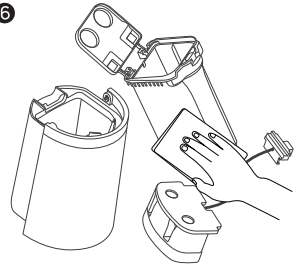

Make sure all parts are dry before reassembling your appliance.

Is The Water Tank Leaking?

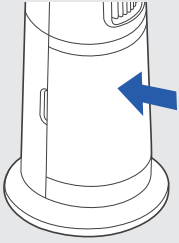

Make sure the water tank is securely attached to the base.

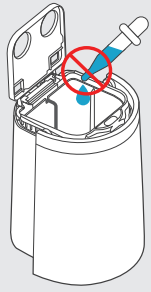

Make sure that no essential oil is added into the water tank.

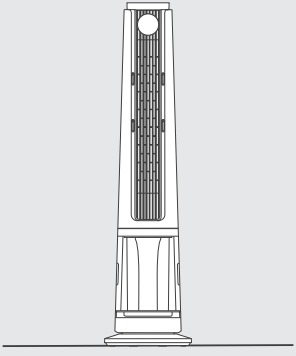

Make sure the appliance is placed on a flat surface.

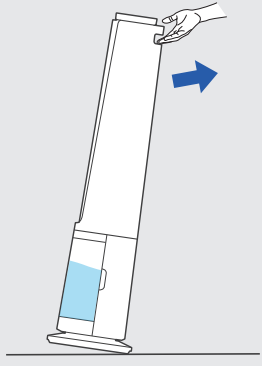

When carrying the appliance, keep the water tank facing upward to prevent slipping, damage, or water spillage.

If the issue persists, please contact customer support (see page 19).

TROUBLESHOOTING 06

My appliance does not work at all.

Make sure that the cord is connected to a powered outlet and the mains voltage corresponds with the voltage indicated on the appliance.

My appliance is shaky and wobbling!

Place the appliance on a flat, level surface.

My appliance is making vibration and noise!

1. Place the appliance on a flat, level surface.
2. Be sure not to insert anything into the air inlet and outlet.
3. It is normal that the fan makes a little noise when manually adjusting the fan head.

My appliance is not misting.

1. Turn the mist level to a higher setting.
2. The base may have too much water. Empty the base and refill the water tank (not the base).
3. The air inlet may be blocked.
4. Make sure the mist nozzle is not blocked.
5. Make sure the appliance is placed on a flat surface.
6. The water temperature may be too low.
7. Turn the mist level to the highest setting and let it run for a while, then adjust it to the desired setting.
8. If the water tank or base have been washed with detergent, rinse thoroughly with clean water to remove any remaining detergent.
9. The appliance will stop misting automatically in the event of low water.
10. In Auto Mode, the appliance will stop adding moisture when it reaches the room humidity target.
11. Make sure the water tank is installed properly.

There is white dust in the water tank.

You should descale the appliance regularly. Using purified or distilled water can help prevent the formation of scale.

The mist produces an unpleasant smell.

1. Use purified or distilled water only. It is not recommended to use tap water.
2. Change water regularly to avoid dirty water accumulation.
3. Clean the appliance and keep it dry for 12 hours with the water tank cap detached.

Water leaks from my appliance.

1. Avoid running the appliance in a room with over 60% relative humidity.
2. Wipe any excess water.
3. Do not shake the appliance.
4. Make sure that the appliance is placed on a flat, level surface.
5. Check the water tank for leaks. If there are leaks, contact Customer Support (see page 19).

If your problem is not listed or still persists, please contact our Customer Support (see page 19)

Model No.: DR-HEC005S
Rev_EN_1.0

We're Here to Help!

(888) 290-1688 (Mon - Fri, 9:00 am-5:00 pm PST/PDT)

support@dreo.com

www.dreo.com

www.dreo.com

Looking for help?

Contact us to get expert support.

support@dreo.com (888) 290-1688 www.dreo.com

Mon - Fri, 9:00 am-5:00 pm PST/PDT