GeekChef®

Espresso Coffee Maker

User Manual

Model No.: GCF20C

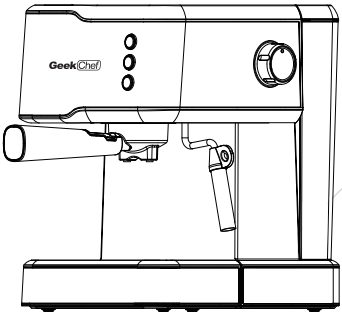

Toll Free: 1-844-801-8880

IMPORTANT: Read the instructions carefully before operating the appliance and keep them for future reference.

TABLE OF CONTENTS

Safety Instructions	**2**
Product Components	**4**
How To Use	**5**
Cleaning And Maintenance	**10**
Troublshooting	**11**
Limited Warranty	**12**

TECHNICAL SPECIFICATIONS

Model No.:	GCF20C
Power :	950W
Voltage:	120V~ 60Hz
Pump Pressure:	20 Bar
Capacity of Water Tank:	1.5L

Scan the QR code for more assistance and support.

SAFETY INSTRUCTIONS

IMPORTANT SAFETY INSTRUCTIONS

1. Read all the safety and operating instructions carefully and retain them for future reference.
2. The appliance is designed exclusively for private use and for the envisaged purpose. This appliance is not fit for commercial use.
3. **Don't** use it outdoors. Keep it away from sources of heat, direct sunlight, humidity (never dip it into any liquid) and sharp edges. **Do not** use the appliance with wet hands. If the appliance is humid or wet, unplug it immediately.
4. When cleaning or putting it away, switch off the appliance and always pull out the plug from the socket (pull the plug itself, not the lead) if the appliance is not being used and remove the attached accessories.
5. **Do not** operate the machine without supervisionNever leave the operating machine unattended. If you leave the room you should always turn the device off. Remove the plug from the socket.
6. The device and the mains lead have to beRegularly checked regularly for signs of damage. If damage is found the device must not be used.
7. **Do not** try to repair the appliance on your own. Always contact an authorized technician. To avoid the exposure to danger, always have faulty cable be replaced only by the manufacturer, by our customer service or by qualified person and with a cable for the same type.
8. In order to ensure your children‘s safety, please keep all packaging (plastic bags, boxes, polystyrene etc.) out of their reach.
9. This device is not intended to be used by individuals (including children) who have restricted physical, sensory or mental abilities and/or insufficient knowledge and/or experience, unless they are supervised by and individual who is responsible for their safety or and have received instructions on how oto use the device. Children should be supervised at all times in order to ensure that they **do not** play with device.
10. Place the coffee machine on a firm and flat surface. Position it so that it cannot tip over.
11. Never apply accessory attachments which are not specified for this appliance.
12. **Do not** touch hot parts of appliance.
13. **Do not** place the device directly next to a gas or electric cooker or any other source of heat.
14. The water tank must only be filled with cold water!

SAFETY INSTRUCTIONS

15. The appliance is only to be used as described in the user manual.
16. **Do not** use the appliance for any commercial purposes.
17. Any other use is not intended and can result in damages or personal injuries.
18. The manufacturer assumes no liability for damages caused by improper use.
19. This appliance is not intended for use by persons(including children) with reduced physical, sensory or mental capabilities, or lack of experience and knowledge, unless they have been given supervision or instruction concerning use of the appliance by a person responsible for their safety. Children should be supervised to ensure that they do not play with the appliance.

SAVE THESE INSTRUCTIONS!
HOUSEHOULD USE ONLY

PRODUCT COMPONENTS

KNOW YOUR COFFEE MACHINE

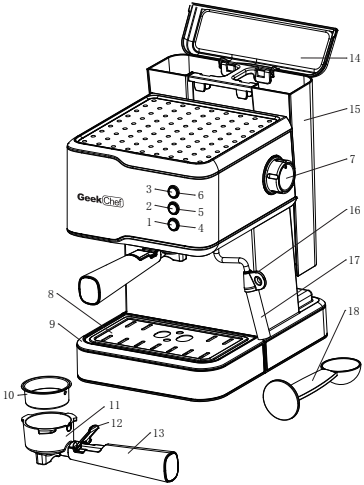

1. On/Off button
2. Espresso button
3. Steam button
4. On/Off button indicator
5. Espresso button indicator
6. Steam ready indicator
7. Steam control knob
8. Drip tray grid
9. Drip tray
10. Filter
11. Filter holder
12. Retention clip
13. Filter holder handle
14. Water tank lid
15. Water tank
16. Steam wand with grip tap
17. Steam wand nozzle
18. Measure scoop

HOW TO USE

BEFORE FIRST USE

1. Rinse the water tank. Remove the water tank lid and fill the water tank with cold water up to the MAX level of the tank.
2. Insert the plug into a wall outlet with suitable voltage.
3. Press the Power button, the Power indicator light turns on and the coffee machine starts to preheat automatically. Once the preheating is finished, the Steam Ready indicator will turn blue.
   This preheating process takes about 2 minutes.
4. Place a big cup under the steam wand. Turn on the Steam control knob,then press the Espresso button. Let the waterflow out of the steam pipe about 80 ml, then press Espresso button again and turn off the Steam control knob. This process is let the water flow into the empty pump for the first use.

Note : There will be a noise and little shake when the machine running first time. It's normal for a 20 bar pump. The noise will be weak in the future using. It is recommended to run the machine without coffee grounds at least once before the first use. This process will help to clean and preheat the appliance.

5. Insert the Filter into the Filter holder

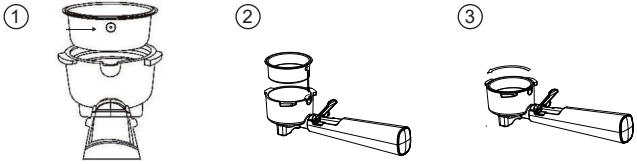

6. Insert the Filter Holder without coffee grounds into the Brew unit with a 45°movement to the left and turn it to the right to lock it in place. The filter holder handle must be perpendicular to the machine or slightly tilted towards the right.

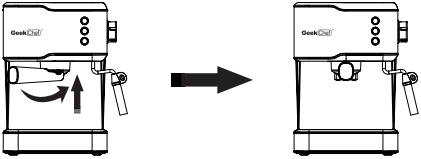

7. Place a large cup under the Filter Holder and press the Espresso Button.
8. After the cup has been filled with water, press the Espresso Button again to stop and wait a few minutes for the machine to reach the correct temperature with the filter holder inserted.

PREPARING THE ESPRESSO

1. Remove the filter holder and fill the filter with coffee grounds using the Measure Scoop provided with the machine.

> **Note : Add one measuring spoon of coffee grounds (we recommend 14g) for each cup. The quantity will vary according to your preferences.**

2. Press the coffee into the filter with the Measure Scoop. The coffee must be pressed evenly to obtain a well levelled and flat surface. Remove any coffee residue from the edge of the Filter holder.

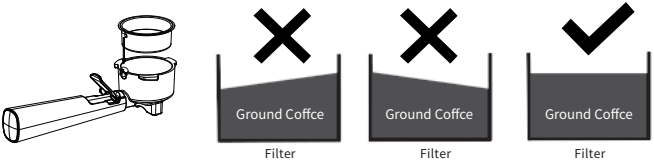

3. Insert the Filter holder into the Brew unit with a 45°movement to the left and turn it to the right to lock it in place. The Filter holder handle must be perpendicular to the machine or slightly tilted towards the right.
4. Wait until the Steam ready indicator light turns blue.

MAKING THE ESPRESSO

1. Press the Espresso Button. The machine will start brewing.
2. Stop the brewing process when the cup is 3/4 full by pressing the Espresso button. The coffee will be more or less intense depending on the amount of water used and, if prepared following the correct procedure, it will have the typical hazelnut / brown coloured "natural cream".

Tips: You could control the brewing coffee volume according to your demand. Recommend volume: brewing 15~16s for 1 cup (appr. 40g), brewing 30~32s for 2 cups (appr.80g).

To brew another cup of espresso, slowly and carefully remove the Filter holder, moving it to the left. Be careful not to burn yourself with the water left on the coffee grounds. Once the Filter holder has been removed, some water will still drip. This is due to the water pressure in the system. Remove the grounds from the Filter and any residue from the Brew unit.

Note : There will be noise during the operating process. This is normal for a 20 bar pump.
Please press the Power button to turn off the machine after using.

FROTHING MILK

To prepare a traditional cappuccino or latte, we recommend:

· Using cold, fresh whole milk. The density of the frothed milk will depend on the milk fat content.

· Using stainless steel, circular, rounded milk jugs, narrower at the top, with a spout, necessary to make cappuccino decorations.
Before starting, it is important to slightly move the Steam Wand outwards in order to insert the jug directly under it and facilitate the movements required to froth the milk correctly.

Continue as follows:

1. Press the Steam Button. The Steam Ready Indicator will turn off if the temperature is not high enough to make steam. Once the preheating has finished, the Steam Ready Indicator will turn blue.
2. Totate the Steam Control Knob slightly counterclockwise to eliminate any condensation from the Steam Wand then close the knob again.
3. Place the jug, half-filled with cold milk, under the Steam Wand.
4. Place the steam nozzle just below the surface of the milk. If it is inserted too deep, the milk will not be frothed; if it is not inserted deep enough, big bubbles will be produced and then disappear immediately.

HOW TO USE

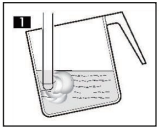

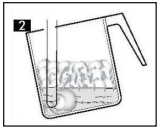

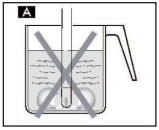

It is important to keep the nozzle not at the centre but close to the edge of the jug, with an appropriate angle to produce a stronger vortex.

5. Rotate the Steam Control Knob counterclockwise to let the steam come out.

Note : The steam pressure increases as the knob is rotated.

The entire operation should last no longer than 60 seconds.

To froth the milk correctly, the steam nozzle must always be in contact with the milk and not with the froth. Therefore, as the layer of froth increases, the jug must be slightly raised trying to keep the nozzle in contact with the milk, without touching the bottom of the jug.

6. Once the desired frothing has been achieved, the steam nozzle must be pushed deeper to heat the milk well.

Tips: It is advisable to always keep a hand on the rounded part of the jug to feel the temperature increase of the unfrothed milk.

7. Once the desired result has been achieved, close the Steam Control Knob, by rotating it clockwise, to stop dispensing steam and remove the jug.

Tips : To make the froth more compact, it is advisable to lightly tap the jug on aflat surface after frothing.

8. Press the Steam Button to OFF. Pour the frothed milk into the coffee.

Warning : The Steam Wand may be very hot during and after use. To avoid burns, move it only by placing your fingers on the rubber tip fitted on the Steam Wand.

Note : Please press the Power Button to turn off the machine after using.

MAKING HOT WATER

1. Turn the machine on and wait until the Espresso indicator light turns on.
2. Place a cup under the Steam Wand.
3. Slowly turn the Steam Control Knob counter clockwise to“ON”, then press the Espresso Button to allow for hot water to be dispensed.
4. Once the desired amount of hot water has been dispensed, press the Espresso button again and turn the steam knob clockwise to“OFF”.

Warning : The Steam Wand may be very hot during and after use. to avoid burns, move it only by placing your fingers on the rubber tip fitted on the Steam Wand.

Note : When hot water is dispensed from the Steam Wand, there might be some water left inside. To drain it, we recommend dispensing some steam for a few seconds.

Please press the Power button to turn off the machine after using.

CLEANING AND MAINTENANCE

Regular cleaning and maintenance keep the machine in working condition and ensure perfect coffee flavour, a constant coffee flow, and excellent milk froth for a long period of time.
Disconnect the appliance from the mains and let it cool before cleaning it with damp cloth.

CLEANING THE FILTER HOLDER AND THE FILTER

The filters should be kept clean to guarantee perfect results.
1. Remove the filter from the filter holder and wash it with warm water.
2.If you notice a malfunction when brewing coffee, immerse the filter in boiling water for 10 minutes and then rinse with running water.

Warning : To avoid bums, the filter must only be replaced when the filter holder has cooled down completely.

CLEANING THE STEAM WAND

After each milk frothing:
1. Clean the Steam wand with a damp cloth. To clean it more thoroughly, you can unscrew the nozzle and wash it with running water.
2. Open the steam knob, allowing the steam to escape for one or two seconds to clear the nozzle hole.
3. Clean the nozzle with wet sponge.

CLEANING THE GRID AND DRIP TRAY

1. Remove the drip tray and the grid and wash them with water. Do not use abrasive cleaning tools.

CLEANING THE WATER TANK

Remove the Water tank and wash it with fresh water.

Warning : To avoid burns, the tank should be cleaned only when the machine is turned off. The drain hose may reach high temperatures during operation.

CLEANING THE BREW UNIT

Regularly remove any residual coffee grounds from the Brew unit using a brush and wash with hot water following the steps below.
1. Do not insert the Filter holder.
2. Place an empty cup under the Brew unit.
3. Press the Espresso button and fill the cup with water.
4. Press the Espresso button again to stop.

TROUBLESHOOTING

PROBLEM	MAKE SURE THAT
No brewing.	There is water in the tank.
	The filter is not clogged because the mixture is too fine or the coffee is too pressed
The pump is too noisy.	There is water in the tank.
	The pump has been activated.
	There is enough coffee ground.
Excessive loss of water from the filter holder.	The filter holder has been inserted correctly.
	The seal is not dirty.
	There are no coffee residues on the edge of the filter holder.
The espresso is not creamy enough.	The coffee has not been ground too coarsely.
	The coffee has been pressed with the tamper.
	The coffee is not too old or dry.
	The traditional filter has been used with the frothing jet device.
The coffee is too cold.	The machine has been heated.
	The coffee has not been ground too coarsely.
	The coffee has been brewed in cold cups. It is recommended to always brew coffee in warm cups.
	The filter holder has not been preheated (Only for the 1st coffee).
The milk does not froth enough.	The steam nozzle is not clogged.
	The steam nozzle has not been inserted too deep in the jug.
	The milk is not too hot.

LIMITED WARRANTY

LIMITED WARRANTY

Geek Technology Ltd. warrants to the original consumer or purchaser this Geek Chef Espresso Coffee Maker is free from defects in material or workmanship for a period of One (1) year from the date of purchase. If any such defect is discovered within the warranty period, Geek Technology Ltd. at its discretion, will repair or replace the Product at no cost. This limited warranty is good only to the original purchaser of the product and effective only when used in United States.

For warranty or repair service: Call 1-844-801-8880 and choose the appropriate prompt, or email info@geektechnology.com. Please have your Product's model number, date code(on rating label), your name, address, city, state, zip code and phone number ready.

NO OTHER WARRANTY IS APPLICABLE TO THIS PRODUCT. THIS WARRANTY IS IN LIEU OF ANY OTHER WARRANTY, EXPERSS OR IMPLIED. INCLUDING WITHOUT LIMITATION, ANY WARRANTY OF MERCHANTABILITY OR FITNESS FOR A PARTICULAR PURPOSE. TO THE EXTENT ANY IMPLIED WARRANTY IS REQUIRED BY LAW. IT IS LIMITED IN DURATION TO THE EXPRESS WARRANTY PERIOD ABOVE. NEITHER THE MANUFACTURER NOR ITS U.S.DISTRIBUTOR SHALL BE LIABLE FOR ANY INCIDENTAL, CONSEQUENTIAL, INDI RECT, SPECIAL, OR PUNITIVE DAMAGES OF ANY NATURE. INCLUD ING WITHOUT LIMITATION. LOST REVE- NUES OR PROFITS, OR ANY OTHER DAMAGE WHETHER BASED IN CONTRACT, TORT, OR OTH ERWISE, SOME STATES AND/OR TERRITORIES DO NOT ALLOW THE EXCLUSION OR LIMITATION OF INCIDENTAL OR CONSEQUENTIAL DAMAGES OR LIMITATIONS ON HOW LONG AN IMPLIED WARRANTY LASTS. SO THE ABOVE EXCLUSION OR LIMITATION MAY NOT APPLY TO YOU. THIS WARRANTY GIVES YOU, THE ORIGINAN PURCHASER, SPECIFIC LEGAL RIGHTS AND YOU MAY ALSO HAVE OTHER RIGHTS THAT VARY FROM STATE TO STATE OR TERRITORY TO TERRITORY.

THIS LIMITED WARRANTY DOES NOT APPLY TO :

1. Failure of product to perform during power failures and interruptions or inadequate electrical service.
2. Damage caused by transportation or handling.
3. Damage caused to the product by accident, vermin, lightning, winds, fire, floods, or acts of God.
4. Damage resulting from accident, alteration, misuse, abuse, or improper installation, repair, or maintenance. Improper use includes using an external device that alters or converts the voltage or frequency of electricity.
5. Any unauthorized product modification, repair by unauthorized repair center, or use of non-approved replacement parts.
6. Abnormal cleaning and maintenance as described in the user's manual.
7. Use of accessories or components that are not compatible with this product.

GeekChef®

Bring The Future Home

Geek Technology Ltd.
1275 Bloomfield Ave
Fairfield, NJ 07004
Toll Free 1-844-801-8880

Version Update: --2021.5.0