Form No. 3368-858 Rev A

Lawn Striper Kit

Model No. 20601

Operator Manual

Safety

- Read all of the instructions in this manual prior to using the lawn striper attachment.
- The lawn striper attaches to and follows behind your lawn mower during normal grass-cutting operations, and should not affect the operating characteristics of your mower. Carefully follow all of your lawn mower manufacturer's operating instructions and warnings when using the lawn striper attachment.
- The lawn striper attachment should not interfere with normal mower operations, such as cutting/mulching/bagging. If there is any interference **immediately shut off mower**, then inspect the lawn striper attachment installation, make any adjustments needed to correct the problem, and reassess operations to verify that the interference has been resolved.
- The lawn striper attachment is designed to work with most walk-behind, self-propelled, and push-type lawn mowers. **Do not use with any other type of mower.**
- The lawn striper attachment must be properly installed, attached, and adjusted in order to work along with your particular lawn mower.
- If the lawn striper attachment should interfere with your ability to mow around obstructions, walkways, or other tightly constrained areas, shut off the mower, remove the roller assembly, and then mow around the obstructed area without the roller assembly attached.

⚠ CAUTION

Do not assemble, disassemble, attach, inspect, or adjust the lawn striper attachment while the mower is running.

Shut off the mower before performing any of these actions.

⚠ CAUTION

Do not place clamp system over any type of existing wires/cables that may be present on lawn mower handlebars.

© 2011—The Toro® Company
8111 Lyndale Avenue South
Bloomington, MN 55420

Register at www.Toro.com.

Original Instructions (EN)
Printed in the USA.
All Rights Reserved

Installation

1

Installing the Clamps

Parts needed for this procedure:

4	Phillips screw
2	Pan head screw
2	Inner clamp
2	Outer clamp
2	Vertical tube
2	Angle adjuster

Procedure

1. Within the lower third of the handlebar, place the inner clamp on the inside of handlebar (Figure 1).

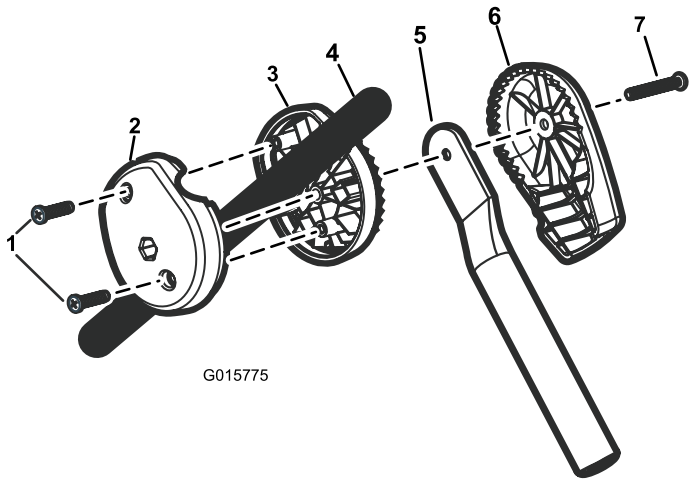

Figure 1

Right-hand handlebar shown

1. Phillips screw
2. Inner clamp
3. Outer clamp
4. Mower handlebar
5. Vertical tube
6. Angle adjuster
7. Pan head screw

2. Place outer clamp on the outside of handlebar, with the word **Up** facing upward (Figure 2), and connect the two clamps to the handlebar using 2 phillips screws (Figure 1).

Important: Do not fully tighten phillips screws as height adjustments will be made later.

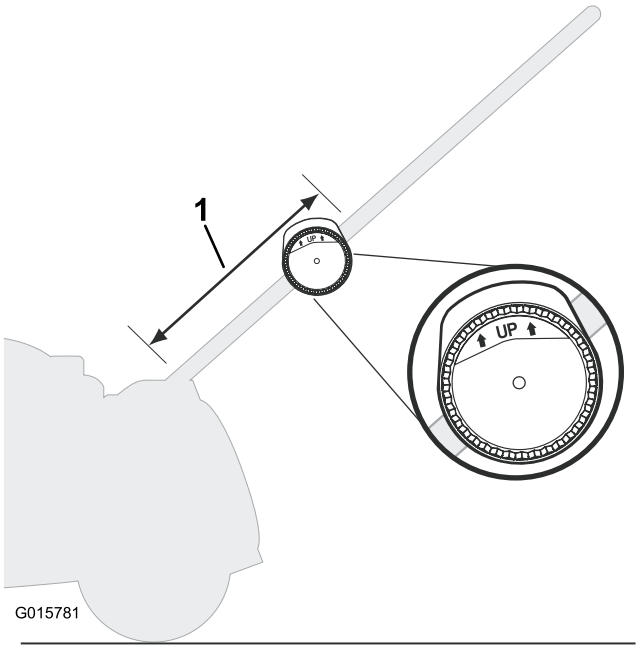

Figure 2

1. Lower third of mower handlebar

3. Set the vertical tube into the angle adjuster. Make sure that the top portion of the vertical tube rests **flat** on the inner portion of the angle adjuster (Figure 1).
4. Use the pan head screw to attach the vertical tube and angle adjuster to the clamp assembly as shown in Figure 1.

Important: Do not fully tighten pan head screw, as angle adjustments will be made later.

5. Repeat this process for the opposite handlebar.

2

Assembling the Hitch Tube and Corner Tubes

Parts needed for this procedure:

2	Corner tube
1	Hitch tube

Procedure

1. Attach corner tubes to the hitch tube by pressing down on the valco pins and locking them into place in the valco holes (Figure 3).

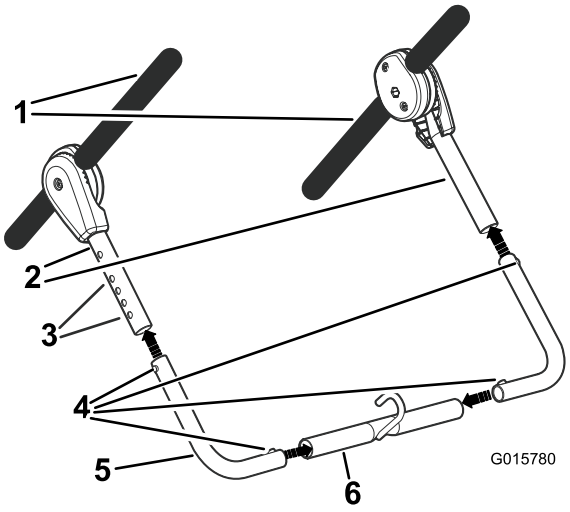

Figure 3

1. Lawn mower handlebars
2. Vertical tubes
3. Valco holes
4. Valco pins
5. Corner tube
6. Hitch tube

2. Attach the corner tubes to the vertical tubes by pressing down on the valco pins and locking them into place in the valco holes (Figure 3).

   Note: When setting width and height of the assembly, make sure the valco pins on each side are in matching holes on the opposite side.

3

Adjusting Angle and Height

No Parts Required

Procedure

1. Angle the assembly as close to the mower as possible by moving the clamps up or down on the mower handlebars without hitting the mower or impeding the mower bagging system (Figure 4).

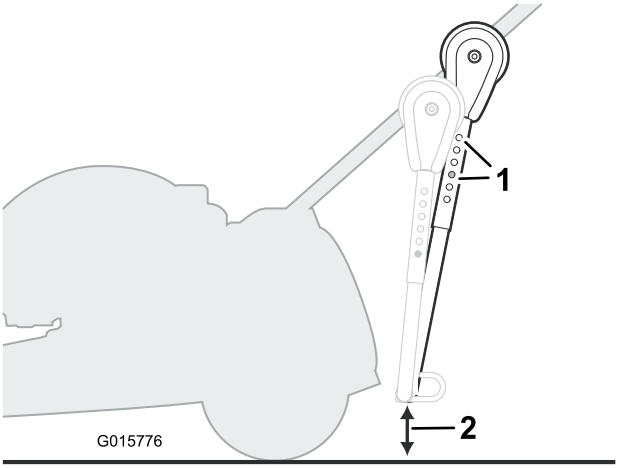

Figure 4

1. Valco hole
2. Minimum of 3-1/2 inches

2. Fully tighten the 2 pan head screws and 4 phillips screws.
3. Set the height of the assembly using the valco pins on either side, making sure the assembly is a minimum of 3-1/2 inches off the ground.

4

Filling and Attaching Roller Assembly

Parts needed for this procedure:

1	Roller plug
1	Roller assembly

Procedure

1. Fill the roller assembly with approximately 16 to 20 lbs. of sand.

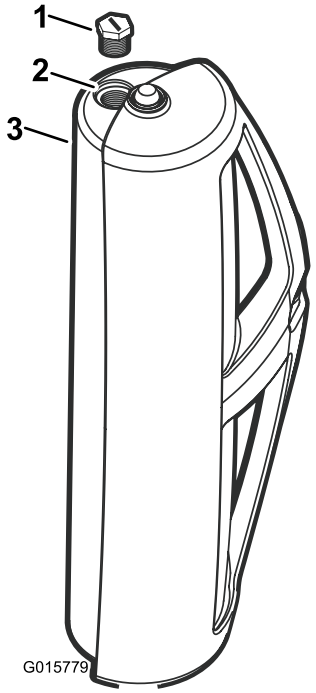

Figure 5

1. Roller plug
2. Pour dry sand into here
3. Roller assembly

2. Seal the roller assembly with roller plug (Figure 5).

   Important: Make sure the roller plug is fully tightened. Failure to do so will result in roller plug impeding the roller's ability to turn.

3. Attach the sand-filled roller assembly onto hitch tube hook as shown in Figure 6.

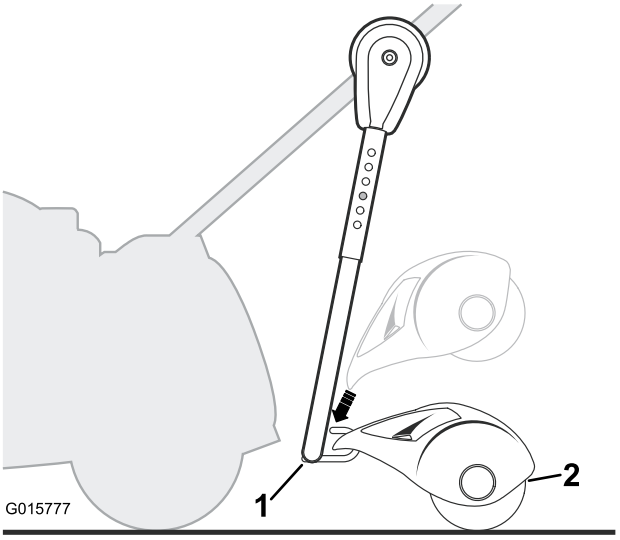

Figure 6

1. Hitch tube
2. Roller assembly

4. Verify that the roller assembly does not interfere with any part of the mower, including other kits or safety features.

Troubleshooting

Problem	Possible Cause	Corrective Action
Roller does not turn.	1. Debris stuck in roller assembly	1. Turn off mower and verify/remove any debris (bark, twigs, stones) that are obstructing the roller.
	2. Roller plug is not fully tightened.	2. Check to see that roller plug is flush with end cap, and tighten roller plug fully.
	3. Roller assembly is not filled.	3. Make sure the roller assembly is filled with approximately 16 to 20 lbs. of **DRY** sand.
Patterning effect does not show.	1. Lawn striper is not attached correctly	1. Refer to *Owner's Manual* for proper installation.
	2. Grass is cut too short.	2. Wait for grass to grow before cutting with the lawn striper attached.
	3. Lack of proper sunlight.	3. Partial/full sunlight is optimal.
U-Bar assembly is hitting the ground.	1. Assembly is not at proper height.	1. Turn off the mower, and set assembly to proper height and angle as outlined in *Owner's Manual.*
	2. Height is different on either side of assembly.	2. Make sure that height is the same on both sides as outlined in *Owner's Manual.*

Notes:

Notes:



Count on it.