AXIS™

Operator's Manual
Manuel de l'utilisateur

GRAVELY

Models

950010 – AXIS 200 DT
(SN 000101 +)

950011 – AXIS 200 DTN
(SN 000101 +)

950012 – AXIS 200 DW
(SN 000101 +)

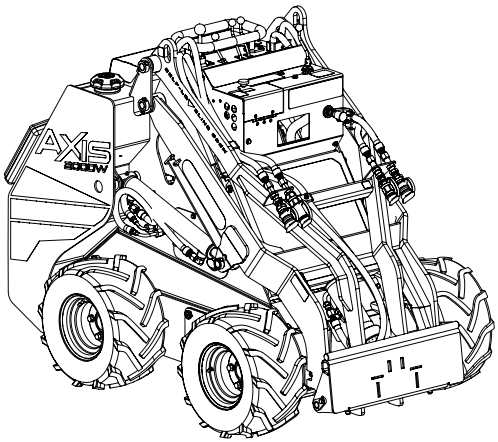

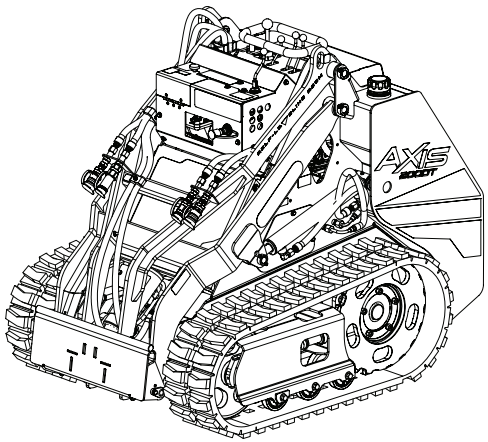

EN ENGLISH
FR FRANÇAIS

30105200B • 6/23
Printed in USA

TABLE OF CONTENTS

WELCOME 2
Register Your Product!. 2
SAFETY. 3
Practices & Laws 3
Emission Control System. 3
Required Operator Training 3
Safety Alert Symbol 3
Signal Words 3
Safety Decals. 4
Safety Instructions 8
ASSEMBLY. 12
Tools Required. 12
Loose Parts Included 12
Assembly 12
CONTROLS AND FEATURES 13
Pump Selector Switch 16
Park Brake Switch 16
Combiner Switch 16
Indicator Lights. 17
Hour Meter 17
Light Switch 17
Ignition Key 17
Safety Interlock Push Button 18
Throttle Control Lever 18
Steering Levers 18
Aux. Lever, Cylinder Driven Attachment 19
Aux. Lever, Motor Driven Attachment . . 19
Lift/Tilt Joystick. 19
Flow Control Knob 20
OPERATION 23
Emergency Stopping 23
Before Operating Unit 23
Mount Attachments 23
Relieve Hydraulic Pressure 25
Operate Unit. 25
Drive Unit 26
Park Unit 27
Transport Unit 27
Lift Unit. 28
Tow or Push Unit 28
MAINTENANCE 30
Maintenance Schedule 30
Fuels, Lubricants, and Capacities 31
Service Parts 31
Lift Arm Support. 31
Check Engine Oil 33
Service Air Filter 33
Check Tracks. 33
Tension Tracks 34
Check Wheel Assembly. 35
Check Fasteners 36
Check Coolant Levels 36
Check Radiator Cooling Fins. 36
Lubricate Unit. 37
Check Battery 38
Hydraulic Fluid 39
Fuel Shutoff Valve 44
Replace Fuel Filter. 45
ELECTRICAL SERVICE 46
Electrical Panel 46
Relays and Fuses 47
Jump Starting Battery 47
Charging Battery 48
TROUBLESHOOTING 49
STORAGE 50
Short-Term Storage 50
Long-Term Storage 50
ACCESSORIES. 51
SPECIFICATIONS. 52
DIMENSIONS 53
WARRANTY 55

WELCOME

Congratulations on your purchase and welcome to the Gravely family! Every machine in the Gravely lineup is designed for long-lasting and unsurpassed performance. We are confident your machine will be part of your family for many years to come.

Have Questions or Need Assistance?
www.gravely.com

A parts manual for your unit is available for free download or purchase at www.gravely.com.
Manual del operador español está disponible para su descarga gratuita o compra en www.gravely.com.

REGISTER YOUR PRODUCT!

It is extremely important to register your product at time of purchase. Product registration activates the warranty and establishes a communication link from AriensCo.

Locate the model and serial number decal on your unit and register those numbers online at www.gravely.com. See Figure 1 for decal location. Be aware that the original selling dealer may have already completed product registration on behalf of the original purchaser.

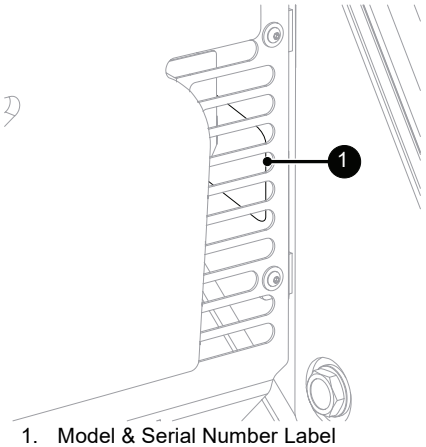

1. Model & Serial Number Label

Figure 1

Record model number here.

Record serial number here.

MANUALS

Before operating the unit, carefully and completely read the owner's manual provided with the unit. They contain safety instructions and important information about unit controls.

The engine on this unit is covered by a separate manual. Refer to the engine manual for engine service recommendations. Contact the engine manufacturer for a replacement manual if necessary.

It is your responsibility to read and understand all safety precautions and instructions in the manuals. If you do not understand or have difficulty following the instructions, contact your Gravely dealer for assistance. To locate your nearest dealer, go to www.gravely.com.

DISCLAIMER

Gravely reserves the right to discontinue, make changes to, and add improvements upon its products at any time without public notice or obligation. The descriptions and specifications contained in this manual were in effect at printing. Equipment described in this manual may be optional. Some illustrations may not be applicable to your unit.

SAFETY

Read these safety rules and follow them closely. Failure to follow these rules could lead to loss of control of unit, severe personal injury or death to you or bystanders, or result in damage to property or machine.

PRACTICES & LAWS

Practice usual and customary safe working precautions. Learn applicable rules and laws in your area. Always follow the practices set forth in this manual.

EMISSION CONTROL SYSTEM

This equipment and/or its engine may include exhaust and evaporative emissions control system components required to meet U.S. Environmental Protection Agency (EPA) and/or California Air Resources Board (CARB) regulations. Tampering with emission controls and components by unauthorized personnel may result in severe fines or penalties. Emission controls and components can only be adjusted by a Gravely dealer or an authorized engine manufacturer's service center. Contact your Gravely Equipment Retailer concerning emission controls and component questions.

REQUIRED OPERATOR TRAINING



Read and understand the Operator's Manual and decals on the unit. This information is for your safety and the proper use of your equipment. Failure to follow these instructions and warnings may cause death or serious injury. If you have purchased this product from a Gravely dealer, the dealer can provide you with training.

Familiarize yourself and any other operators with all controls and the safe use of the features of this unit. If you loan, rent or sell this product to others, provide them with all manuals.

If you have any questions, please call our customer support line at 920-756-4688 or contact us at www.gravely.com. Do not use this equipment if, after reading the Operator's Manual and the on-board decals, you have any questions about the safe use of this product.

SAFETY ALERT SYMBOL



This is the safety alert symbol. It means:

- **ATTENTION!**
- **YOUR SAFETY IS INVOLVED!**

When you see this symbol:

- **BECOME ALERT!**
- **OBEY THE MESSAGE!**

SIGNAL WORDS

The safety alert symbol above and signal words below are used on decals and in this manual. Read and understand all safety messages.

1. Danger



DANGER: Indicates an IMMINENTLY HAZARDOUS SITUATION! If not avoided, WILL RESULT in death or serious injury.

2. Warning



WARNING: Indicates a POTENTIALLY HAZARDOUS SITUATION! If not avoided, COULD RESULT in death or serious injury.

3. Caution



CAUTION: Indicates a POTENTIALLY HAZARDOUS SITUATION! If not avoided, MAY RESULT in minor or moderate injury. It may also be used to alert against unsafe practices.

4. Notice

NOTICE: Indicates information or procedures that are considered important but not hazard related. If not avoided property damage could result.

5. Important

IMPORTANT: Indicates general reference information worthy of special attention.

SAFETY DECALS

The safety decals on your machine are visual reminders of the important safety information in this manual. All messages on your unit must be fully understood and carefully followed. Safety decals on the machine are explained below.

ALWAYS replace missing or damaged safety decals. Replacement decal part numbers are found in the parts manual for your machine and may be ordered from your dealer.

See Figure 2 and Figure 3 for safety decal locations.

Safety Decal Locations

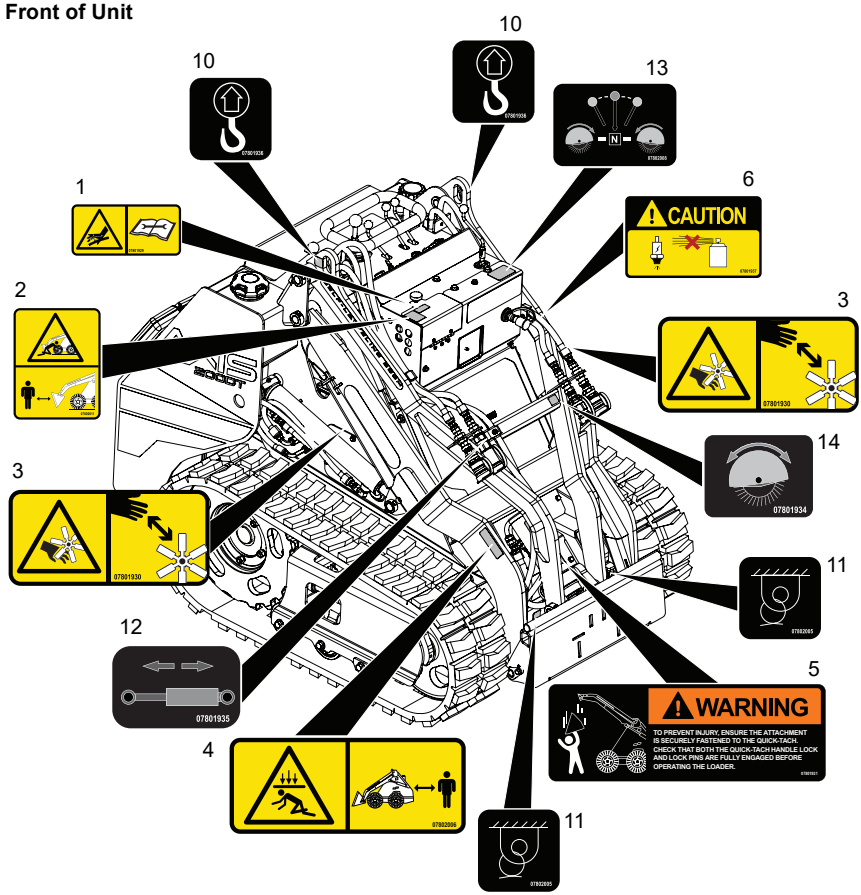

Figure 2

Rear of Unit

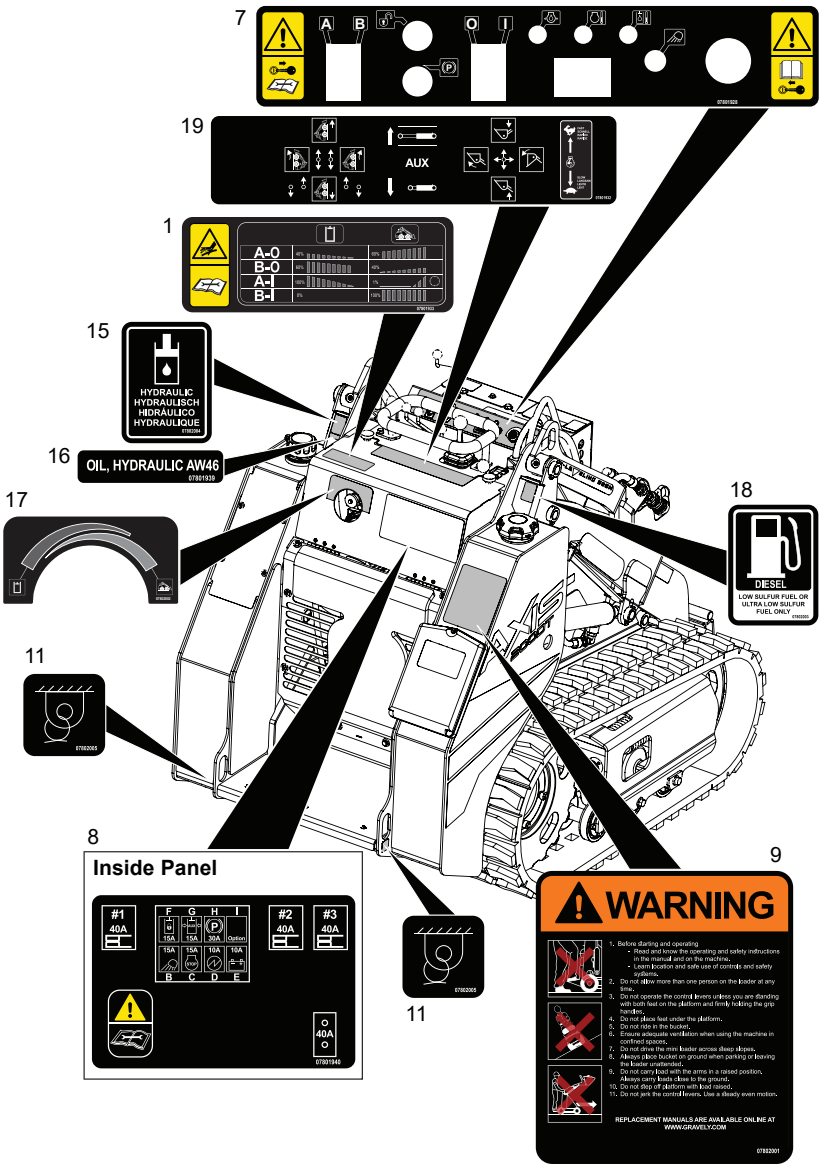

Figure 3

Safety Decal Descriptions

1. DANGER!



Escaping hydraulic fluid can penetrate skin, causing injury.



Read owners manual before servicing or making adjustments to unit.

2. DANGER!



Stay clear of raised arms, unless proper safety procedures have been followed.



Stay clear of front of skidsteer during operation.

3. DANGER!



ROTATING FAN
(Diesel Models)
Keep fingers, arms, and hands away from this area.



Keep fingers, arms, and hands away from this area.

4. DANGER!



Falling material may be present.



Keep people and pets away when operating skidsteer.

5. DANGER!



Ensure attachment is securely fastened to quick-tach.

6. DANGER!



DO NOT use ether or any high energy fuels to assist starting.

7. DANGER!



DANGER!



Shut off engine, remove key, and read manual before servicing or making adjustments to machine.

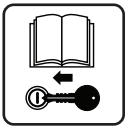

Read all manuals before operating machine.

8. DANGER!



DANGER!



Read owners manual before servicing or making adjustments to unit.

9. DANGER!



DO NOT operate control levers unless both feet are on platform.



DO NOT drive across steep slopes.



DO NOT carry load with arms raised.

10. IMPORTANT



IMPORTANT: Lifting points.

11. IMPORTANT

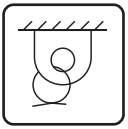

IMPORTANT: Tie-down point.

12. IMPORTANT

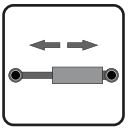

IMPORTANT: Hydraulically driven connection point.

13. IMPORTANT

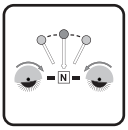

IMPORTANT: Motor driven control lever.

14. IMPORTANT

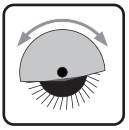

IMPORTANT: Motor driven connection point.

15. IMPORTANT



IMPORTANT: Hydraulic fluid.

16. IMPORTANT



IMPORTANT: Hydraulic fluid.

17. IMPORTANT



IMPORTANT: Flow control between hydraulics and drive circuit.

18. IMPORTANT



IMPORTANT: Diesel fuel Use low sulfur fuel or ultra low sulfur fuel only.

19. IMPORTANT	
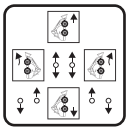	**IMPORTANT:** Steering controls.
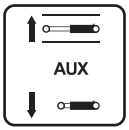	**IMPORTANT:** Auxiliary controls.
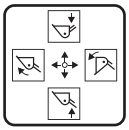	**IMPORTANT:** Bucket controls.
	**IMPORTANT:** Throttle controls.

SAFETY INSTRUCTIONS

Safe Practices for Skidsteers

If used improperly, this machine is capable of amputating hands and feet and throwing objects. Failure to observe the following safety instructions could result in serious injury or death. Use only for purposes intended as set forth in the Operator's Manual. Other use is improper and may cause serious injury or death.

General Information
Read, understand, and follow instructions and warnings in this manual and on the machine, engine and attachments.
ALWAYS check overhead and side clearances carefully before operation. ALWAYS be aware of traffic when operating along streets or curbs.
ALWAYS keep hands and feet within limits of unit.
Only allow operators, who are responsible, trained, familiar with the instructions, and physically capable to operate the machine.
Keep children, people, and animals away. Keep children out of work area and under watchful care of a responsible adult.
Keep area of operation clear of all toys, pets, and debris. Objects can cause vehicle instability and personal injury.
Check for weak spots on dock, ramps or floors. Avoid uneven work areas and rough terrain. Stay alert for hidden hazards.
DO NOT run engine in an enclosed area. Always provide good ventilation.
Mark and know location of all utility lines before operation. Always check with local utilities before digging.
DO NOT carry passengers and keep people or pets away from the operating area.
DO NOT operate the machine while physically or mentally impaired, feeling tired, ill or under the influence of alcohol or drugs.
Follow the manufacturer's recommendation for wheel weights or counterweights.
DO NOT touch parts which are hot. Allow parts to cool.

Preparation Before Operating
Inspect unit before each use for missing or damaged decals and shields. Replace or repair as needed.
Clear the operating area of all objects which could be thrown by or interfere with operation of the machine.
Keep the area of operation clear of all bystanders, particularly small children. Stop the machine and attachment(s) if anyone enters the area.
DO NOT operate the machine without safety devices in place and functioning properly. Check frequently for signs of damage, wear or deterioration and replace as needed.
NEVER tamper with safety devices. Check their proper operation regularly. NEVER do anything to interfere with the intended function of a safety device or to reduce the protection provided by the safety device.
Check parking brake operation frequently. Service as required.
Wear appropriate personal protective equipment such as safety glasses, hearing protection, and substantial footwear.

Operating
Improper use of power equipment can cause serious permanent injury or death to the operator or a bystander. Understand: • How to operate all controls • The functions of all controls • How to STOP in an emergency • Braking and steering characteristics • Turning radius and clearances If the operator or the mechanic cannot read the manual, it is the owner's responsibility to explain it to them. Manuals are available in other languages at www.gravely.com.
Only run the engine in well ventilated areas. Exhaust gases contain carbon monoxide, an odorless deadly poison.
Do not operate any of the control levers or auxiliary power take-off unless both feet are standing on the platform.
Before starting engine, disengage auxiliary power.
DO NOT travel at too fast a rate. DO NOT change engine governor settings or over-speed engine.
Always back up slowly. Always look down and behind before and while backing.
DO NOT leave a running machine unattended. ALWAYS shut off auxiliary power, lower attachment, lower throttle setting, and stop engine before leaving unit. ALWAYS remove key to prevent unauthorized use.
Never carry passengers on any part of unit.
Avoid uneven and rough terrain. DO NOT operate near drop offs, ditches, or embankments. Unit can suddenly turn over if a wheel is over the edge of a cliff or ditch, or if an edge caves in.
Check the capacity of the attachment in use. Exceeding this limit may cause unit instability.
ALWAYS operate unit in good visibility and light.

Fuel is highly flammable and its vapors can explode. Use ONLY approved fuel containers. NO Smoking! NO Sparks! NO Flames! Allow engine to cool before servicing. NEVER fill fuel tank when engine is running, hot, or unit is indoors.
Never weld, drill, or make any alterations to fuel tanks.
Abnormal vibrations are a warning of trouble. Striking a foreign object can damage unit. Lower attachment, immediately stop unit and engine. Remove key and wait for all moving parts to stop. Remove wire from spark plug. Inspect unit and make any necessary repairs before restart.
DO NOT put hands or feet near moving parts or under the machine.
Lightning can cause severe injury or death. If lightning is seen or thunder is heard in the area, DO NOT operate the machine; seek shelter.

Slope Specific
Slopes are a major factor related to accidents. Operation on slopes requires extra caution. If you feel uneasy on a slope DO NOT operate the unit on it.
DO NOT operate on steep slopes. When you must operate on a slope, travel up and down the slope. Never operate across a slope. With a loaded bucket, operate with the bucket uphill. With an unloaded bucket, operate with the bucket downhill. Always move the vehicle with the lift arms in the lowest operating position.
DO NOT operate on slopes of more than 10°.
DO NOT operate machine under any condition where traction, steering, or stability is in question. Tracks or tires could slide even if the wheels are stopped.
If tracks or tires lose traction, turn off auxiliary power and proceed slowly straight down slope. Avoid wet surfaces.
Avoid parking on a slope.
DO NOT leave unit unattended on a slope. ALWAYS chock wheels and engage parking brake when parking on slopes.

Always keep the machine in gear when going down slopes. DO NOT coast downhill.

Avoid starting and stopping on slopes. Avoid making sudden changes in speed or direction. Make turns slowly and gradually.

Children Specific

NEVER allow children to operate or play on or near unit. Be alert and shut off unit if children enter area.

DO NOT allow children under the age of 18 to operate any outdoor power equipment.

Personnel Specific

Read and obey all warning, caution, and instructions on the unit and in provided manuals.

- Only trained adults may operate unit.
- Training includes actual operation.
- Clearly understand instructions.
- Be alert! Conditions can change.

NEVER operate unit after or during the use of medication, drugs, or alcohol. Safe operation requires your complete and unimpaired attention at all times.

NEVER allow anyone to operate the unit when their alertness or coordination is impaired.

DO NOT operate unit without wearing adequate outer garments. Wear adequate safety gear and protective gloves. Wear proper footwear to improve footing on slippery surfaces.

Protect eyes, face, and head from objects that may be thrown from unit. Wear appropriate hearing protection.

Avoid sharp edges. Sharp edges can cut. Moving parts can cut or amputate fingers or a hand. Wear gloves to service unit when handling sharp edges.

ALWAYS keep hands away from any pinch points.

ALWAYS keep hands and feet away from all moving parts during operation. Moving parts can cut off body parts.

DO NOT touch unit parts which might be hot from operation. Allow parts to cool before attempting to maintain, adjust, or service.

Keep the operator platform free of dirt, grease, or mud. NEVER place feet under platform.

Do not tie yourself to the unit.

Controls

Stop completely before reversing.

Never jerk the control levers. Always use a steady, even action to achieve smooth control.

When using attachments, ensure that they are attached correctly with latch pins engaged. Practice the operation before beginning work.

Always be aware of obstructions that may cause injury to operator or damage to the unit.

Avoid loss of control or tipping. Do not carry a load with the lift arms raised. Always carry load close to ground. Do not step off the platform when lift arms are raised.

Always ensure there is ample overhead clearance.

Keep alert with eyes fixed in direction of travel.

Do not travel with the arms in the raised position.

Service

ALWAYS maintain unit in safe operating condition. Damaged or worn out muffler can cause fire or explosion.

Check the condition of the unit at the end of each day and repair any damage.

ALWAYS block wheels and know all jack stands are strong, secure and will hold weight of unit during maintenance.

When performing service which requires arms to be raised, make sure cylinder lock is engaged and secure.

Keep nuts and bolts tight and keep equipment in safe operating condition.

Shut off engine before maintenance, adjustments, or service (except where specifically recommended).

Allow hot parts to cool.

Keep unit free of dirt, stones, and other debris. Clean up oil or fuel spills.

Storage

DO NOT store unit with fuel in the fuel tank inside a building where any ignition sources are present. Allow unit to cool completely.
ALWAYS clean unit before extended storage. See Engine Manual for proper storage.

Battery
Avoid Electric Shock. DO NOT reverse battery connections.
Explosive Gases! Poisonous battery fluid contains sulfuric acid. Contact with skin, eyes, or clothing can cause severe burns.
Battery posts, terminals and related accessories contain lead and lead compounds, chemicals known in the State of California to cause cancer and reproductive harm. Wash hands after handling.
No flames. No sparks. No smoking near battery.
Always wear safety glasses and protective gear near battery.
DO NOT TIP battery beyond a 45° angle in any direction.
ALWAYS KEEP BATTERIES OUT OF REACH of children.

Hauling
Use extra care when loading or unloading unit onto trailer or truck. Secure unit chassis to transport vehicle.
NEVER secure by rods or linkages that could be damaged.
Always use the lifting lug at the top of the unit. Lift the unit with an appropriate crane on the construction site.
Always use the tie-down lugs provided on each side of the unit to secure the unit when transporting by truck or trailer.
DO NOT transport with attachment in raised position. Lower attachment when unit is parked or stored unless the cylinder lock is used.

Fire and Fuel Specific
Extinguish all cigarettes, cigars, pipes and other sources of ignition.
Use only an approved fuel container.
DO NOT remove fuel cap or add fuel with the engine running or while hot.
DO NOT refuel indoors or in enclosed spaces.
DO NOT store the machine or fuel container, or refuel, where there is an open flame, spark, or pilot light such as on a water heater or other appliance.
If fuel is spilled, DO NOT attempt to start the engine and avoid creating any source of ignition until fuel vapors have dissipated.
To help prevent fires: keep machine free of debris build up; clean up oil or fuel spillage and remove any fuel soaked debris; allow unit to cool before storing.
Use extra care in handling any fuels. They are flammable and vapors are explosive.

ASSEMBLY

TOOLS REQUIRED

- Open-end wrenches
- Tire gauge

LOOSE PARTS INCLUDED

- Key
- Engine Operator's Manual; Read before operating.
- Registration Card; Fill out and return to Gravely.

ASSEMBLY

Unit is fully assembled. Any bucket or other accessory must be installed separately.

WARNING: FAILURE TO FOLLOW INSTRUCTIONS could result in personal injury and/or damage to unit. Read, understand, and follow all safety practices in Owner/Operator Manual before beginning.

ELECTRIC SHOCK could result in personal injury and/or damage to unit.

ALWAYS remove wire from spark plug before you adjust or assemble unit.

DO NOT remove wire from spark plug while engine is running.

1. Unpack unit. Remove unit and other components from shipping container.
2. Verify wheel nuts/lug bolts are torqued to 108 – 122 N•m (80 – 90 lb-ft).
3. **For Tire Model 950012:** Adjust tire pressure to 24 psi (166 kPa).
4. Check engine oil. Refer to Engine Manual for proper type oil and crankcase capacity.
5. Check hydraulic fluid level (see *Maintenance* on page 30).
6. Fill engine fuel tanks (see *Operation* on page 23). Refer to Engine Manual for proper type.
7. Verify battery is connected. Refer to *Check Battery* on page 38.
8. Check function of all controls (see *Controls and Features* on page 13).

WARNING: FAILURE OF CONTROLS could result in death or serious injury.

Make sure unit runs and performs properly (see *Operation* on page 23).

Read and understand all manuals before operating machine.

CONTROLS AND FEATURES

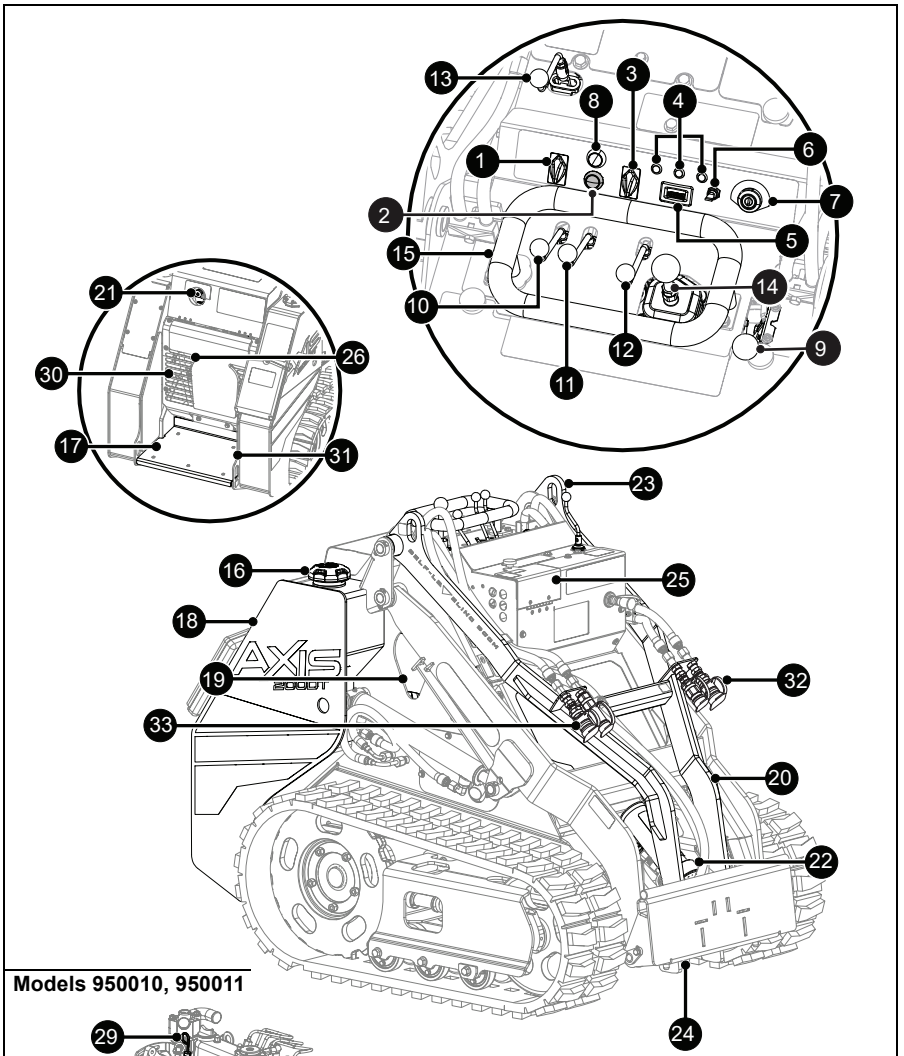

Figure 4

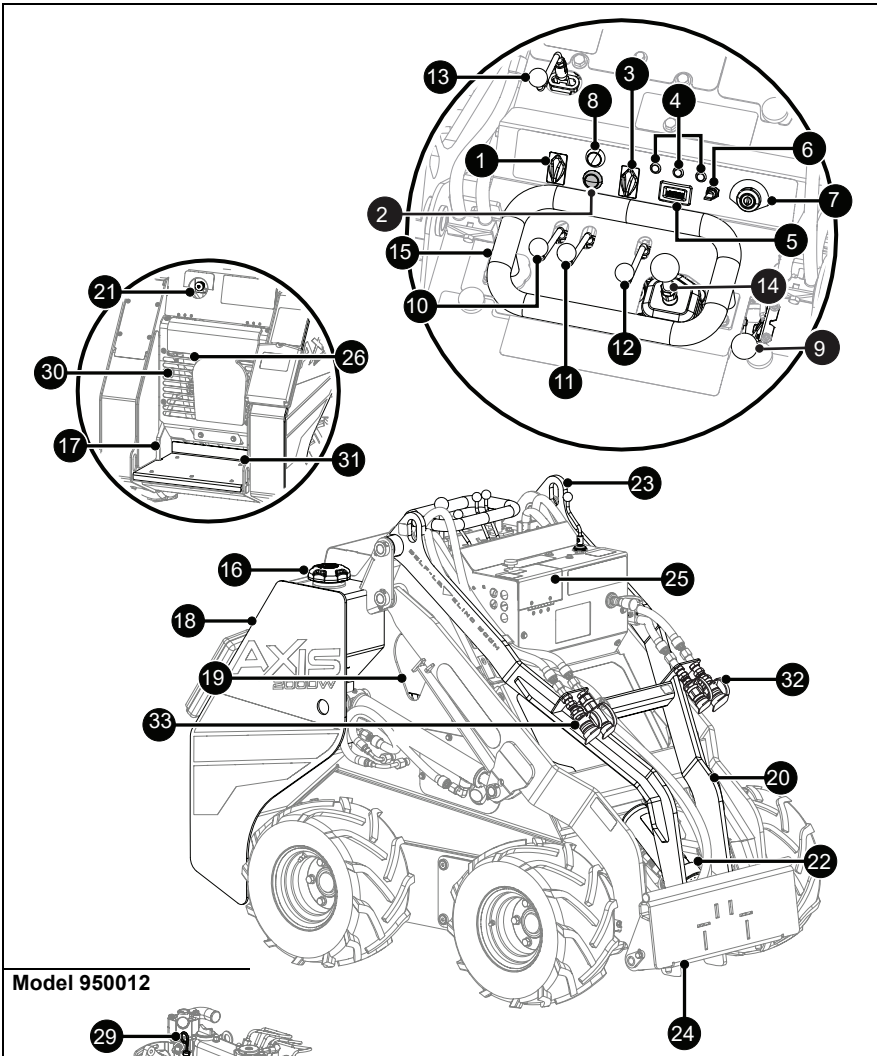
13
3
8
4
6
1
2
7
5
15
14
10
12
9
11
21
26
30
17
31
23
16
25
18
19
32
33
20
22
24
Model 950012
29
27
28

Figure 5

1. Pump Selector Switch
2. Brake Switch Button
3. Combiner Switch
4. Indicator Lights (Low Engine Oil Pressure, High Engine Coolant Temperature, High Hydraulic Fluid Temperature)
5. Hourmeter
6. Light Switch
7. Ignition Switch
8. Safety Interlock Push Button
9. Throttle Control Lever
10. Left Hand Steering Lever
11. Right Hand Steering Lever
12. Aux. Lever, Cylinder Driven Attachment
13. Aux. Lever, Motor Driven Attachment
14. Lift/Tilt Joystick
15. Operator Hand Grips
16. Fuel Cap
17. Operator Platform
18. Fuel Tank
19. Muffler
20. Lift Arms
21. Flow Control Knob
22. Tilt Cylinder
23. Lift Lug
24. Tie Down Lugs (one behind tilt plate and two on rear frame)
25. Radiator Cap (Inside Access Door)
26. Air Cleaner (Behind Engine Guard)
27. Oil Filter
28. Oil Drain
29. Engine Oil Dipstick
30. Hydraulic Fluid Level Glass (Behind Engine Guard)
31. Fuel Level Glass (not shown)
32. Motor Driven Attachment Couplers
33. Cylinder Operated Attachment Couplers

WARNING: AVOID INJURY. Read and understand entire *Safety* section before proceeding.

See Figure 90 for all controls and features locations.

PUMP SELECTOR SWITCH

CAUTION: Before making any adjustments to selector switch, return steering control levers and all auxiliary hydraulic controls to neutral position. Do not adjust these controls while unit is in motion or during attachment operation.

See Figure 6.

Selects either primary or secondary circuit.

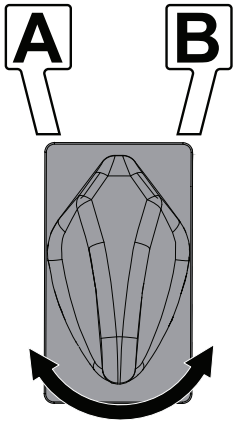

Figure 6

PARK BRAKE SWITCH

See Figure 7.

Push to activate/deactivate parking brake (red push button).

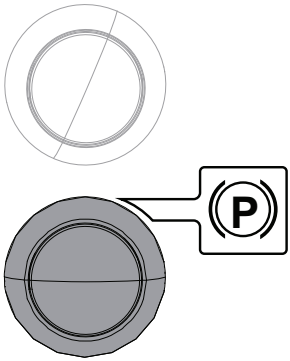

Figure 7

COMBINER SWITCH

CAUTION: Before making any adjustments to combiner switch, return steering control levers and all auxiliary hydraulic controls to neutral position. Do not adjust these controls while unit is in motion or during attachment operation.

See Figure 8.

Diverts fluid from one circuit into the other.

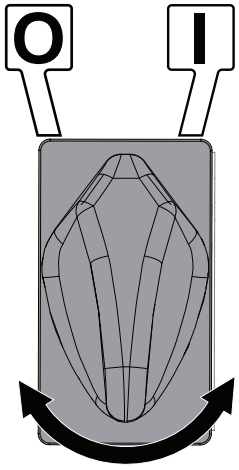

Figure 8

INDICATOR LIGHTS

See Figure 9.

Low Engine Oil Pressure Light

This light illuminates if engine oil pressure is low. Stop engine immediately and determine cause.

High Engine Coolant Temperature Light

This light is illuminated if coolant temperature has exceeded recommended levels. If this occurs, shut off engine immediately following proper shutdown procedures and determine cause.

High Hydraulic Fluid Temperature Light

This light will illuminate when fluid temperature has exceeded recommended levels. Shut off engine immediately and determine cause.

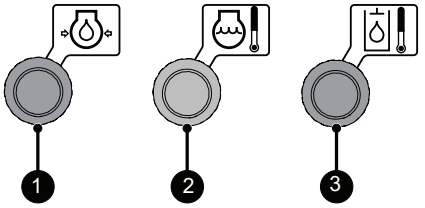

1. Low Engine Oil Pressure Light
2. High Engine Coolant Temperature Light
3. High Hydraulic Fluid Temperature Light

Figure 9

HOUR METER

See Figure 10.

Hour meter measures engine runtime up to 9999.9 hours and cannot be reset.

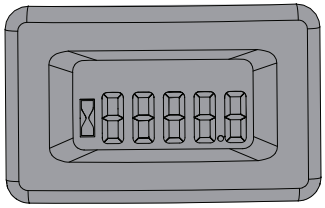

Figure 10

LIGHT SWITCH

See Figure 11.

Turns working light on and off.

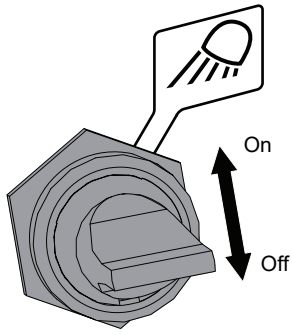

Figure 11

IGNITION KEY

See Figure 12.

Ignition switch has a removable key that is used to start and stop engine. There are four positions:

- OFF - Engine shut off
- RUN - Engine running
- PREHEAT - Pre-heats engine for cold weather starting. Hold ignition switch in this position for seven seconds before cranking engine.
- START - Cranks engine. Key returns to RUN when released.

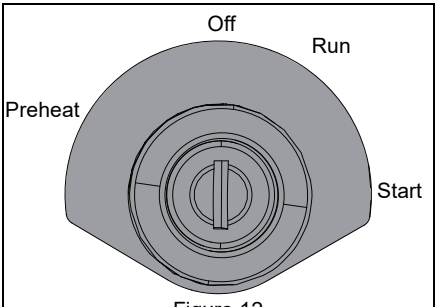

Figure 12

SAFETY INTERLOCK PUSH BUTTON

See Figure 13.

Activates hydraulic flow on unit.

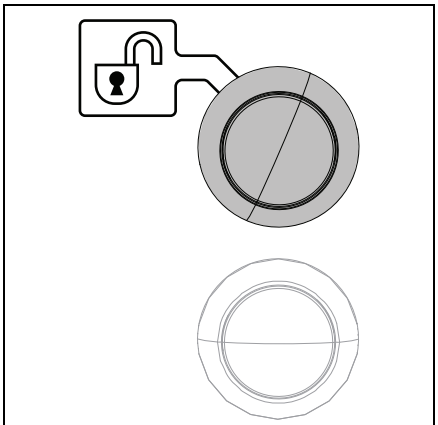

Figure 13

When skidsteer is started, all hydraulic flow is directed away from loader controls and into hydraulic tank until operator depresses green safety interlock push button.

To direct flow to main control valve (which includes drive control, lift/tilt control, and primary auxiliary control) and second auxiliary valve, there is a green electric safety interlock push button located on left hand side of instrument panel. This push button must be depressed momentarily to activate hydraulic circuits. Skidsteer disengages safety interlock ONLY by turning ignition key to off position. (See *Stopping Engine* on page 26 for proper shutdown procedures.)

IMPORTANT: Safety interlock button MUST be pushed along with pump selector switch selection soon after starting to prevent hydraulic system from overheating.

THROTTLE CONTROL LEVER

See Figure 14.

Controls engine speed.

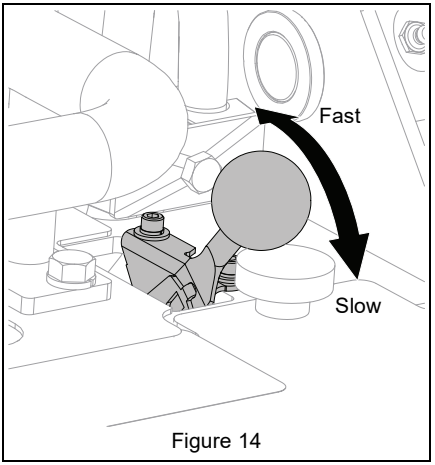

Figure 14

STEERING LEVERS

See Figure 15.

Control direction and speed of unit.

NOTICE: Aggressive turning can scuff or damage lawns. ALWAYS keep all tracks or wheels rotating when making sharp turns. DO NOT make turns with inside tracks or wheels completely stopped. To obtain minimum turning radius, slowly reverse inside tracks or wheels while moving outside tracks or wheels slowly forward.

- To go straight forward, push forward on both levers with equal pressure.
- To turn left, decrease pressure on left lever.
- To turn right, decrease pressure on right lever.
- To go straight backwards, pull rearward on both levers with equal pressure.
- To stop unit, return both levers to neutral.

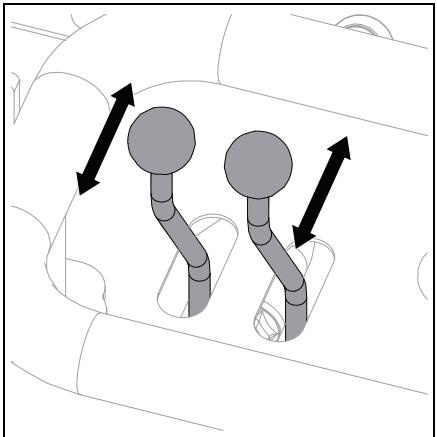

Figure 15

AUX. LEVER, CYLINDER DRIVEN ATTACHMENT

See Figure 16.

Raises and lowers hydraulic cylinder-driven attachment arms.

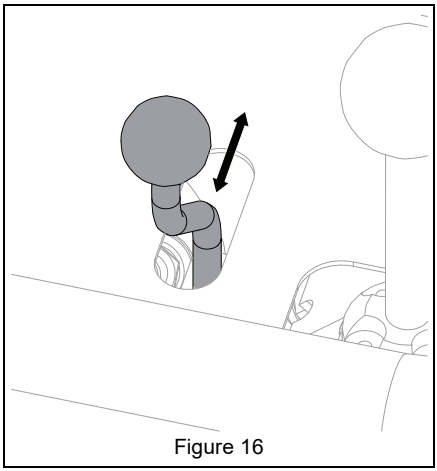

Figure 16

AUX. LEVER, MOTOR DRIVEN ATTACHMENT

See Figure 17.

This lever operates side-to-side. Moving lever left provides fluid flow to female coupler, while moving it right provides fluid flow to male coupler. Centering lever provides a neutral, off position.

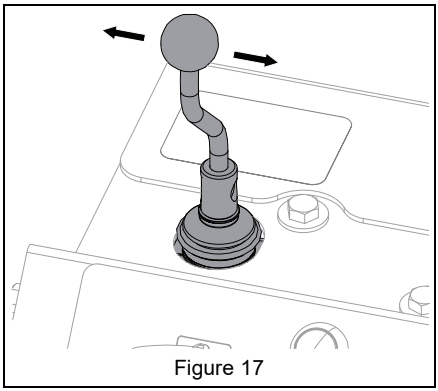

Figure 17

LIFT/TILT JOYSTICK

See Figure 18.

Controls machine lift arms.

- To tilt attachment forward, slowly move joystick right.
- To tilt attachment rearward, slowly move joystick left.
- To lower lift arms, slowly move joystick forward.
- To raise lift arms, slowly move joystick rearward.

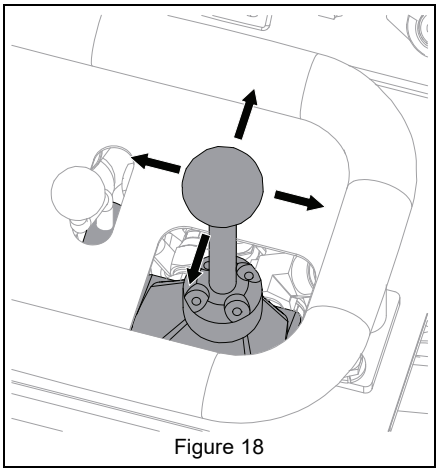

Figure 18

FLOW CONTROL KNOB

CAUTION: Before making any adjustments to flow control knob, return steering control levers and all auxiliary hydraulic controls to neutral position. Do not adjust these controls while unit is in motion or during attachment operation.

See Figure 19.

Flow control knob allows metering amount of fluid flow between hydraulics and skidsteer drive circuit. See *Operating Modes* on page 20 for detailed information.

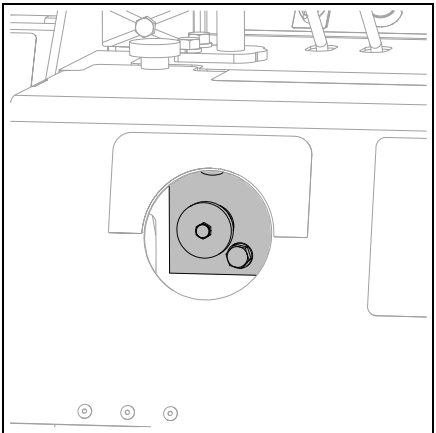

Figure 19

Operating Modes

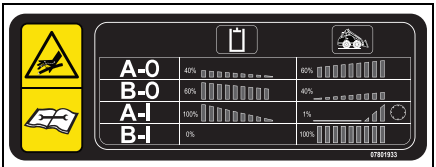

Figure 20

Selection	Hydraulic Flow*	CTC Flow (Speed)*
A-O	5.5 GPM	8.5 GPM (3.5 mph)
B-O	8.5 GPM	5.5 GPM (2.1 mph)
A-I	14 GPM	0 GPM (no drive)
B-I	0 GPM	14 GPM (5.3 mph)
* With flow control knob turned fully out counter-clockwise.		

Figure 21

A-O High Drive - Low Hydraulics

This mode is used for normal bucket and travel operations as well as for operating cylinder equipped hydraulic attachments such as grapples and motor equipped attachments. This position provides a fast travel speed and lower flow to hydraulic circuit. Attach hydraulic powered attachments to appropriate quick couplers and set controls as follows.

Pump Selector Switch

Set switch to “A” position.

Combiner Switch

Set switch to “O” position

Flow Control Knob

Turn clockwise to increase drive speed and decrease amount of fluid flow to hydraulic circuit.

With flow control knob turned fully left (counter clockwise), approximately 8.5 gpm (32.2 l/m) flows to drive system and 5.5 gpm (20.8 l/m) flows to hydraulic circuit. This provides a travel speed of 3.5 mph (5.6 km/h).

With flow control knob turned fully right (clockwise) approximately 14 gpm (53 l/m) flows to drive system and no flow to hydraulic circuit.

B-O Low Drive - High Hydraulics

This mode is used for operating motorized hydraulic attachments such as trenchers, sweepers, augers, snow blowers, etc. This position provides a slow travel speed while providing increased fluid flow to hydraulic circuit. With attachment connected to unit motor auxiliary hydraulic circuit, set controls as follows.

Pump Selector Switch

Set switch to “B” position.

Combiner Switch

Set switch to “O” position.

Flow Control Knob

Turn clockwise to increase drive speed and decrease amount of flow to hydraulic circuit. With flow control knob turned fully left (counter clockwise), approximately 5.5 gpm (20.8 l/m) flows to drive system and 8.5 gpm (32.2 l/m) flows to hydraulic circuit. This provides a travel speed of 2.1 mph (3.4 km/h).

NOTICE: While this is recommended trenching mode, trenching can also be performed in A-1 mode by using flow control knob to divert fluid to drive circuit.

A-I High Hydraulics - Bleed To Drive

This mode is used to provide full hydraulic power to hydraulic circuit to power attachments where reduced or no travel speed is required.

In this position unit's travel speed can be increased by turning flow control knob clockwise.

Pump Selector Switch

Set switch to "A" position.

Combiner Switch

Set switch to "I" position.

Flow Control Knob

Turning clockwise will increase drive speed and decrease amount of flow to hydraulic circuit.

In this mode, fluid can be bled (0 gpm to 14 gpm) into drive circuit by turning flow control knob fully clockwise.

B-I High Drive - No Hydraulics

This mode is used when long travel distances are encountered. This position provides fastest maximum travel speed (5.3 mph, 8.5 km/h) while providing no flow to hydraulic circuit.

Pump Selector Switch

Set switch to "B" position.

Combiner Switch

Set switch to "I" position.

Flow Control Knob

Does not function in this mode.

In this mode, hydraulic circuit receives 0 gpm flow.

Axis Attachment Chart

WARNING: AVOID DAMAGE. Some attachments will not work with this machine. Verify attachment minimum and maximum GPM requirements. Exceeding maximum GPM requirements may result in personal injury and/or damage to the attachment. See Figure 21 for GPM specs for Axis.

Recommended Combiner Setting	Attached to RH Quick couplers (for Cylinder)		Attached to LH Quick couplers (for Motor)		Attached to Lift Arms	
	Recommended	Alternate	**Recommended**	Alternate	**Recommended**	Alternate
Bucket Attachments					**A-O**	B-O
Bucket/Grapple Attachments	**A-O**	B-O				
Multi-Purpose Grapple	**A-O**	B-O				
Forks-Mini Pallet					**A-O**	B-O
Auger-Earth			**A-I**	B-O		
Stump Grinder			**A-I**	B-O		
Leveler					**A-O**	B-O
Trencher			**B-O**	A-I		
Blade/Dozer	**A-O**	B-O				
Tiller			**B-O**			
Soil Conditioner			**B-O**			
Broom/Sweeper			**B-O**			
Snow Blower*			**B-O**			
Rotary Brush Mower*			**B-O**			

*Minimum GPM needs may be too HIGH to use this attachment. Verify GPM requirements.

OPERATION

WARNING: AVOID INJURY. Read and understand *Safety* section before proceeding.

IMPORTANT: All references to left, right, front or rear are given from perspective of operator in operator's position, facing direction of forward travel. See Figure 22.

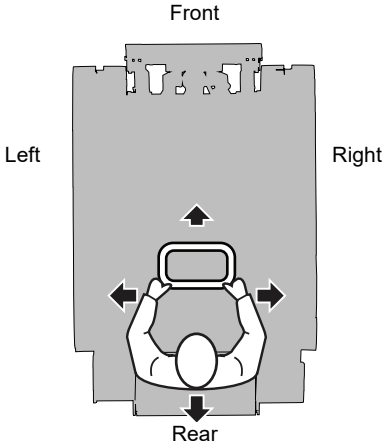

Figure 22

EMERGENCY STOPPING

Turn ignition key to off position and remove key from ignition.

BEFORE OPERATING UNIT

Before starting skidsteer, complete the following inspection:

1. Check hydraulic fluid level (see *Check Hydraulic Fluid Level* on page 39), engine oil level, engine coolant level (see *Check Coolant Levels* on page 36) and fuel supply.
2. Check for fuel, oil and hydraulic line leaks.
3. Check lights and cables.
4. Inspect tracks, pivot points, mounting pins, nuts and bolts for possible failure or loosening.
5. Check all controls are in neutral position.
6. Check condition and operation of all safety decals and equipment. Ensure all shields and safety screens are in place. If necessary repair or replace before starting.

WARNING: AVOID INJURY. Do not move any control lever unless standing with both feet on platform and holding grip handle.

For complete daily service see *Maintenance Schedule* on page 30.

MOUNT ATTACHMENTS

Standard quick-tach allows changing from one attachment to another quickly without having to remove bolts or pins.

Install Attachment

1. Rotate lock pins to unlock position (handles pointing outward). See Figure 23.

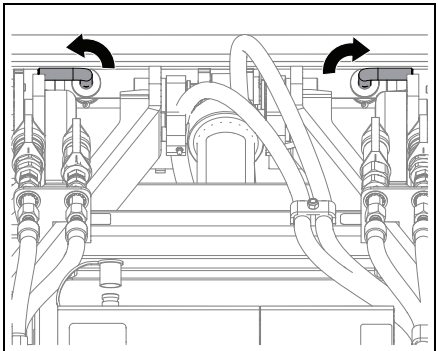
Figure 23

2. Activate hydraulic safety interlock push button. Tilt attachment frame forward so top round edge of attachment frame fits under lip on attachment. See Figure 24.

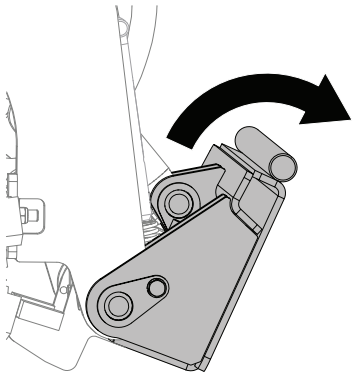

Figure 24

3. Drive into attachment, raising arms so top of attachment frame slips under attachment lip. Lift attachment slightly.
4. Using tilt cylinder, roll attachment back so it drops into place.
5. Rotate lock pins to locked position (handles facing inwards). Verify lock pins are fully inserted through lock holes in attachment. See Figure 25.

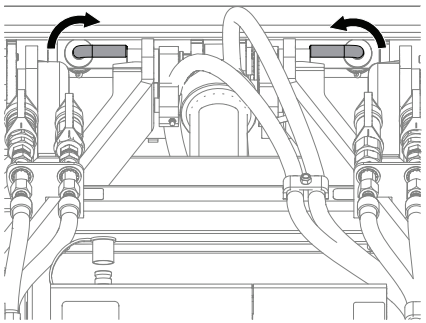

Figure 25

6. Lower attachment to the ground and turn off engine.
7. Relieve hydraulic pressure in attachment line. See *Relieve Hydraulic Pressure* on page 25.
8. Clean quick couplers and connect to attachment hydraulic hoses (if required). See Figure 26.

IMPORTANT: Couplers on right side of unit are for hydraulic operated attachments and couplers on left side of unit are for motor driven attachments.

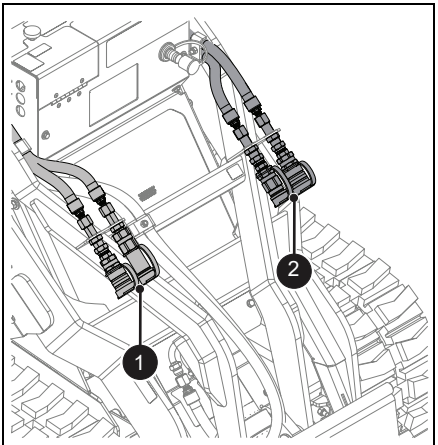

1. Hydraulic Operated Attachment Couplers
2. Motor Driven Attachment Couplers

Figure 26

WARNING: AVOID INJURY. After hook-up to attachment, check to be sure lock pins are fully engaged.

Remove Attachment

1. Lower lift arms and tilt attachment forward so attachment is resting on ground.
2. Turn off engine.
3. Relieve hydraulic pressure in attachment line. See *Relieve Hydraulic Pressure* on page 25.
4. Rotate lock pins to unlocked (handles pointing outwards) position. See Figure 27.

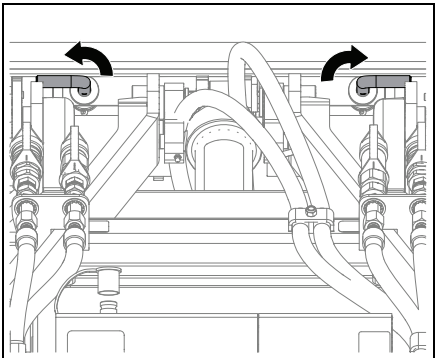

Figure 27

5. Start engine. Activate hydraulic safety interlock push button. Tilt attachment forward until top edge of attachment mount frame clears attachment lip. Back unit away from attachment. See Figure 28.

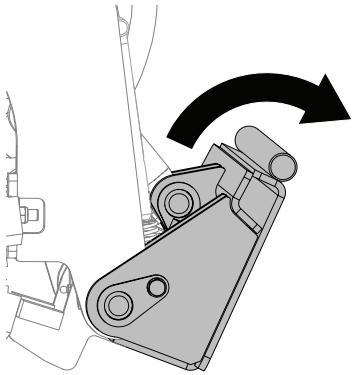

Figure 28

RELIEVE HYDRAULIC PRESSURE

1. To relieve hydraulic pressure from auxiliary attachments, turn key to Run but do not start engine.
2. Press green safety interlock push button to activate hydraulic system.
3. Shift auxiliary levers back and forth to relieve hydraulic pressure in attachment lines.
4. Turn key to Off position.
5. Clean quick couplers and connect or disconnect attachment hydraulic hoses.

OPERATE UNIT

Starting Engine

WARNING: AVOID INJURY. Do not attempt to start or move any control levers unless standing with both feet on platform and holding hand grips.

1. Stand on operator platform.
2. Move auxiliary hydraulics control to neutral position.

WARNING: POTENTIAL HAZARD. To prevent attachment movement, verify auxiliary hydraulic lever is in neutral position during engine starting.

CAUTION: Check that all control levers are in neutral (center) position, especially auxiliary hydraulic control. If this lever is not in neutral and hydraulic activator switch is depressed, engine will attempt to start under full load.

See Figure 29.

IMPORTANT: Allow engine to warm completely before beginning operation.

3. Set throttle to idle. Avoid excessive engine speed during warm up.
4. If the ambient temperature is below -5° C (23° F) and the engine is very cold, turn ignition key counterclockwise to Preheat position to activate glow plugs.

IMPORTANT: Shown below are the standard preheating times for various temperatures. This operation, however, is not required when the engine is warmed up.

Ambient Temperature	Preheating Time
Above 10°C (50°F)	NO NEED
10°C (50°F) to -5°C (23°F)	Approx. 5 seconds
*Below -5°C (23°F)	Approx. 10 seconds
Limit of continuous use	20 seconds

5. Turn key clockwise to Start position to engage starter. Do not crank starter for more than 15 seconds. If engine fails to start, repeat step 4.
6. Allow engine to warm up for five minutes before operating. Keep operator's area free of debris. Always drive unit at speeds compatible with safety, especially when operating over rough ground, unfamiliar terrain, when crossing ditches or when turning.
7. To restart a warm engine, move throttle control slightly ahead of idle position and turn ignition key to Start position.

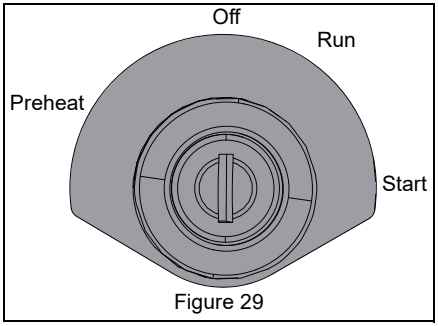

Figure 29

IMPORTANT: This engine is equipped with glow plugs. Do not use ether or any high energy fuels to assist starting.

IMPORTANT: Ensure auxiliary levers are kept in neutral when not being used to avoid power loss and overheating of hydraulic fluid.

IMPORTANT: Do not crank engine with starter for more than 15 seconds at a time, as this will overheat starter.

8. Press safety interlock button to activate hydraulic and brake system.
9. Disengage parking brake.

Stopping Engine

WARNING: AVOID INJURY. In an emergency, stop engine by turning ignition key to OFF.

WARNING: AVOID INJURY. Wait for all moving parts to stop before leaving operator's position.

1. Select level ground whenever possible. If you must park on a slope or incline, position machine at right angles to slope. Lower attachment to ground and block tracks or tires.
2. Lower lift arms and ground attachment.
3. Return auxiliary hydraulics to neutral position.
4. Press parking brake button.

IMPORTANT: This brake has a memory, therefore if brake is not engaged before unit is shut off, then brake will NOT be engaged when it is restarted.

5. Return throttle control to idle position. If engine is hot, allow it to idle for at least two minutes.
6. Turn engine switch to off position and remove key.

DRIVE UNIT

Speed

WARNING: AVOID INJURY. Move steering levers slowly and keep throttle at slow speed until you gain experience operating unit.

IMPORTANT: Always move steering levers slowly. Moving steering levers further forward will increase speed and move unit faster.

To slow down, slowly move steering levers toward neutral.

To stop, slowly move steering levers to neutral.

Steering levers should automatically return to neutral when released.

Steering

WARNING: AVOID INJURY. Move steering levers slowly and keep throttle at slow speed until you gain experience operating unit.

1. Move steering levers to begin moving unit.

Direction of Travel	Lever Position
Forward	Push both levers forward from neutral position. 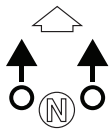
Reverse	Pull both levers backward from neutral position. 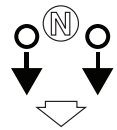
Right Turn	Push left lever farther forward than right lever. 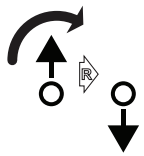

Direction of Travel	Lever Position
Left Turn	Push right lever farther forward than left lever. 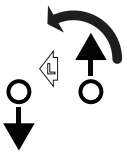
Stop	Return both levers to neutral position. 

IMPORTANT: Using this machine can scuff and damage lawns. To prevent severe damage to lawns, always keep both tracks or wheels rotating when making sharp turns. DO NOT make turns with inside track or wheels completely stopped. For minimum turning radius, slowly reverse inside track or wheels while moving outside track or wheels slowly forward.

PARK UNIT

CAUTION: POTENTIAL HAZARD. Avoid parking on slopes, but if you must, use wheel chocks.

1. Move steering control levers to neutral.
2. Lower lift arms to ground.
3. Move throttle to slow position.
4. Engage parking brake.
5. Turn ignition key to OFF to stop engine.
6. Remove key from ignition switch.

TRANSPORT UNIT

CAUTION: POTENTIAL HAZARD. When transporting on a road or highway during day or at night, be sure that trailer is equipped with lights and signs as required by law.

IMPORTANT: Do not operate or drive unit on roadways.

Tie Down Lugs

WARNING: AVOID INJURY. Read and understand *Safety* section before proceeding.

CAUTION: AVOID DAMAGE. Be sure trailer and/or truck is of adequate size and capacity to safely transport skidsteer.

CAUTION: AVOID DAMAGE. Before loading skidsteer, verify ramps and parking surface are free of oil, grease, ice, etc. and of sufficient strength to support load.

CAUTION: AVOID DAMAGE. When loading skidsteer with an attachment, always load heavy end first.

IMPORTANT: Measure clearance height of skidsteer and trailer or truck, and post it in truck cab.

See Figure 30.

To transport unit on a trailer and/or truck:

1. Drive unit onto trailer.
2. Lower attachment arms.
3. Stop engine.

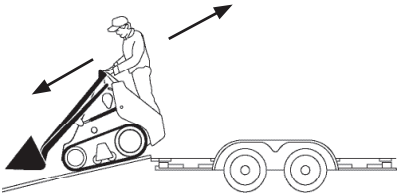

Figure 30

4. Secure unit to trailer using tie down lugs and chains. There are three tie down points provided for securing unit while transporting. One at lower front and two at rear of unit. See Figure 31.

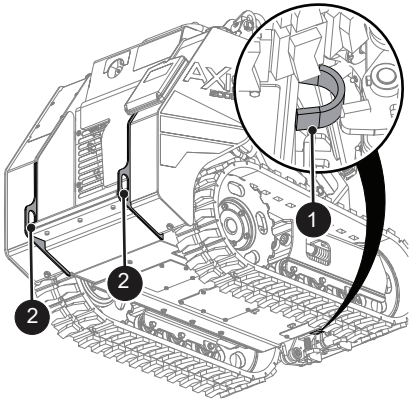

1. Front Tie Down Lug
2. Rear Tie Down Lugs

Figure 31

NOTICE: Minimum 3/8 in. grade 40 chain is required.

LIFT UNIT

WARNING: AVOID INJURY. Read and understand *Safety* section before proceeding.

CAUTION: AVOID DAMAGE. Be sure crane is of adequate size and capacity to safely lift skidsteer.

To lift and move unit by crane:

1. Lower attachment arms.
2. Stop engine.
3. Secure crane hook to lift lugs on top of unit. See Figure 32.

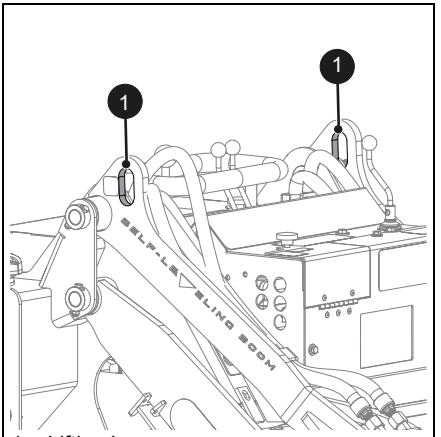

1. Lifting Lugs

Figure 32

4. Lift entire unit off ground and move to new location.

TOW OR PUSH UNIT

WARNING: AVOID INJURY. Read and understand *Safety* section before proceeding.

Follow this procedure only if engine is not starting and jump starting did not work. This procedure can only happen if there is battery power (use a jump battery if needed), to activate safety interlock and parking brake.

Tow Unit

Unit can be towed using following procedure.

IMPORTANT: Two people will be needed for this procedure: one person in tow vehicle and one person on machine's operator platform.

1. Using a tow vehicle of adequate size and minimum 3/8 in. grade 40 chain, hook chain(s) to front or rear lugs (see Figure 31). Pull chains tight.
2. Turn key to On and push safety interlock button and then parking brake button.
3. Person on machine will need to push both steering levers in direction unit is being towed (ex: pulling unit forward, push steering levers forward). Steering levers will need to be held for duration of tow time. Do NOT tow machine faster than walking speed (3 mph).
4. Tow unit to trailer or truck to be loaded.

Push Unit

Unit can be pushed using following procedure.

IMPORTANT: Three people minimum will be needed for this procedure: one person on machine's operator platform and at least two people to push unit.

1. Turn key to On and push safety interlock button and then parking brake button.
2. Person on machine will need to push both steering levers in direction unit is being pushed (ex: pushing unit forward, push steering levers forward). Steering levers will need to be held for duration of push time.
3. Push unit to trailer or truck to be loaded.

MAINTENANCE

WARNING: AVOID INJURY. Read and understand *Safety* section before proceeding.

Your Gravely dealer can provide service and adjustments to keep your unit operating at peak efficiency.

Contact an authorized engine manufacturer's service center for engine service.

MAINTENANCE SCHEDULE

Service Performed	Each Use	Every 50 hrs.	Every 100 hrs.	Every 150 hrs.	Every 200 hrs.	Every 300 hrs.	Every 1000 hrs.	Annually
Check Engine Oil *	•							
Check Fuel Level	•							
Check Hydraulic System • Fluid • Hoses • Fittings	•							
Check Coolant Levels	•							
Clean Radiator Cooler Fins	•							
Check Air Filter *	•							
Check Tracks	•	•						
Check Tire Pressure	•							
Check Wheel/Sprocket Nut Torque	•	•						
Check Decals	•							
Lubricate Hinge Pin Zerk Fittings	•							
Replace Hydraulic Fluid Upper Filter - Initial Change Only		•						
Change Engine Oil and Filter - Initial Change Only *		•						
Clean Air Filter *			•					
Check Final Drive Oil Level				•				
Change Upper Hydraulic Fluid Filter				•				
Clean and Protect Battery Terminals				•				
Change Engine Oil and Filter *					•			
Change Fuel Filter						•		
Change Hydraulic Fluid							•	
Change Lower Hydraulic Fluid Filters (2)							•	
Change Engine Cooling System **							•	
Replace Air Filter *								•

* Refer to engine manual for instructions

** Drain, flush, and refill system using a 50/50 mix of ethylene glycol compatible for diesel engines and water. Inspect coolant hoses. See Engine Manual for detailed instructions.

FUELS, LUBRICANTS, AND CAPACITIES

Quality petroleum products will provide best performance from your skidsteer. It requires only common products which are commercially available through outlets of major refineries. This chart shows which lubricant to use in various skidsteer components.

Component	Type of Lubricant/ Fluid	Capacity Liter (Imp. Gals)
Engine Oil with Oil Filter Change	SAE 15W40 API Classification CJ	5.1 L (1.35 gals)
Fuel Tank	Diesel (see Engine Manual for fuel grade and sulfur content recommendations)	38 L (10 gals.)
Hydraulic Fluid Reservoir	Hydraulic fluid AW46	42 L (11 gals.)
Grease	High quality lithium based grease	
Final Drive Case	Hydraulic fluid AW46	3.5 L/side (0.92 gals/ side)
Coolant	50/50 Ethylene glycol and water. (See Engine Manual)	4.4 L (1.16 gals.)

SERVICE PARTS

See your Gravely dealer to purchase service parts for your unit.

Common Service Parts

Description	Qty.	Part No.
Fuel Stabilizer	118 ml (4 oz)	04730300
Ariens Hi-Temp Grease	414 ml (14oz)	00036700

Description	Qty.	Part No.
Set of Keys	1	30152501
Lower Hydraulic Filters	2	30147300
Upper Hydraulic Filter	1	30113701
Hydraulic Cap	1	30108801
Fuel Filter	1	30152600
Fuel Cap	1	30177300
Oil Filter	1	21526100
Air Filter Inner Element	1	21536900
Air Filter Outer Element	1	21537000

LIFT ARM SUPPORT



WARNING: AVOID INJURY. Do not service skidsteer while engine is running.



WARNING: AVOID INJURY. Do not get under lift arms or reach through lift arms while they are raised.



WARNING: AVOID INJURY. If service is required with lift arms raised, lift arm support must be engaged.

Raise Lift Arms

Some maintenance will require lift arms to be raised.

1. Turn engine On. Push safety interlock to activate hydraulics.
2. Remove any attachment and raise lift arms to their maximum height.
3. Remove hitch pin by pulling ring while holding lift arm support with your other hand. See Figure 33.

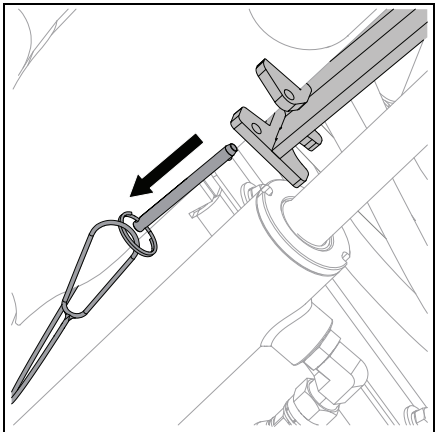

Figure 33

4. Slowly lower lift arm support into position against cylinder shaft, taking care not to damage cylinder shaft. See Figure 34.

WARNING: AVOID DAMAGE. Do not lower lift arms with engine running. Damage to lift arm will occur.

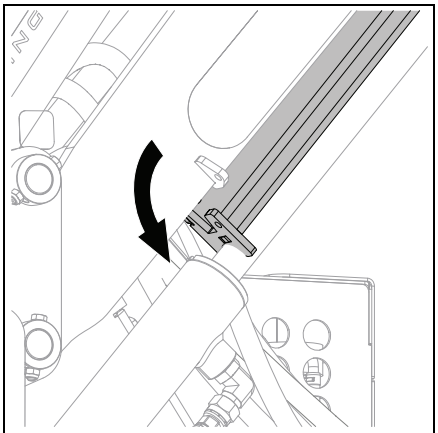

Figure 34

5. Turn engine Off. Turn key back to On, but do not start engine. Push safety interlock to activate hydraulics. Move joystick to down position to allow lift arms to drop down onto lift arm support. See Figure 35.

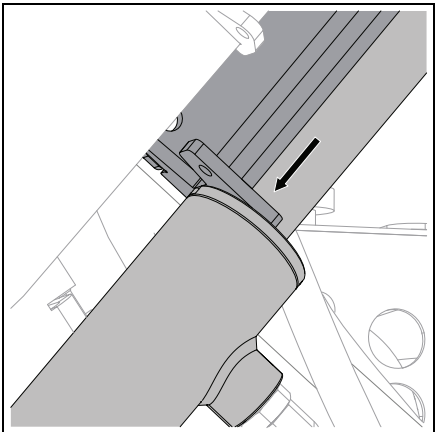

Figure 35

IMPORTANT: Ensure nylon lanyard does not get pinched or broken. If it does, replace immediately.

Lower Lift Arms

1. Turn engine On. Push safety interlock to activate hydraulics.
2. Raise lift arms to maximum height, taking pressure off lift arm support. See Figure 36.

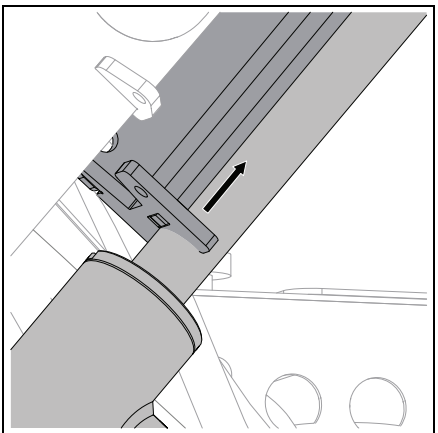

Figure 36

3. Raise lift arm support into position against lift arm. See Figure 37.

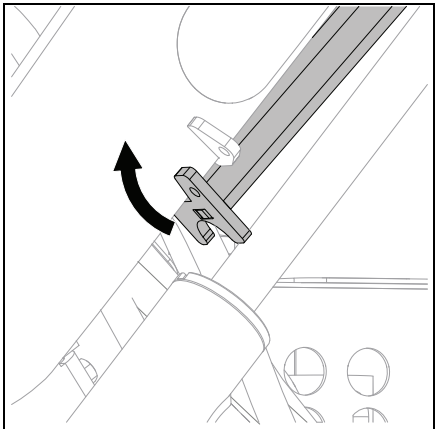

Figure 37

4. Reinstall hitch pin into lift arm support and lift arm. See Figure 38.

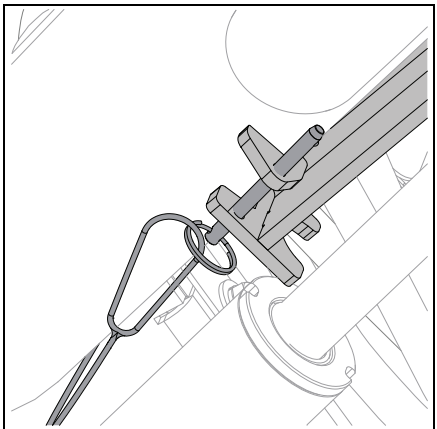

Figure 38

5. Lower lift arms to ground.

CHECK ENGINE OIL

NOTICE: Engine oil level must be maintained at correct level or engine damage may occur.

Check engine oil level before each use. See Engine Manual for detailed instructions.

SERVICE AIR FILTER

Service air filter every 100 hours of operation or more often in dirty conditions. See Engine Manual for detailed instructions.

CHECK TRACKS

Models 950010, 950011

NOTICE: Check tracks after first 8 hours of operation and every 50 hours of operation thereafter.

1. Raise and block front of unit using bucket tilt function. Block rear of unit with a suitable lifting device.

See Figure 39.

2. Check following items:
   - Idler wheels are unbroken and rotating freely.
   - Idler wheel bolts are tight.
   - Sprockets are not worn.
   - Tracks and springs are not cracked or showing premature failure.
   - Wheel nuts are torqued to 108 – 122 N•m (80 – 90 lb-ft).
3. If sprocket spins inside track, this could mean that track is stretched and may need more tension (see *Tension Tracks* on page 34). This may also be a symptom of component failure and must be diagnosed and corrected immediately. Contact your Gravely dealer.

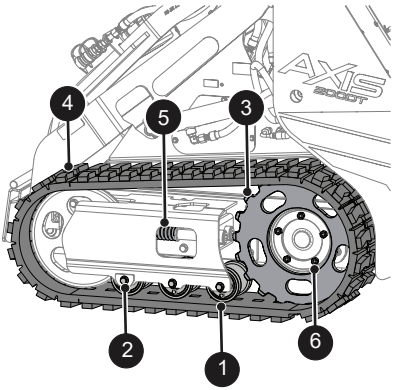

1. Idler Wheel
2. Idler Wheel Bolt
3. Sprockets
4. Track
5. Spring
6. Wheel Nut

Figure 39

TENSION TRACKS

Models 950010, 950011

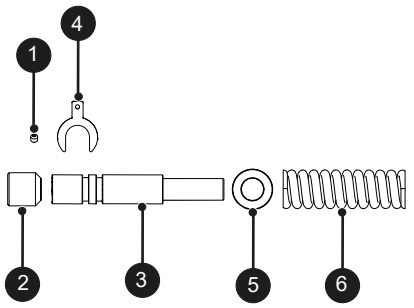

1. Set Screw 5/16" UNC x 5/16" Long
2. Set Screw 1 1/2" UNC x 1 1/2" Long
3. Spring Pusher
4. Locking Clip
5. Spring Washer
6. Spring

Figure 40

IMPORTANT: Because of the loaded spring, the track tensioning system is a constant-tension system. When the track has significant wear, the locking clip (item 4) can be moved to the second locking groove on the spring pusher (item 3) to recover lost spring tension.

1. Remove both sets of inner and outer small set screws. See Figure 41.

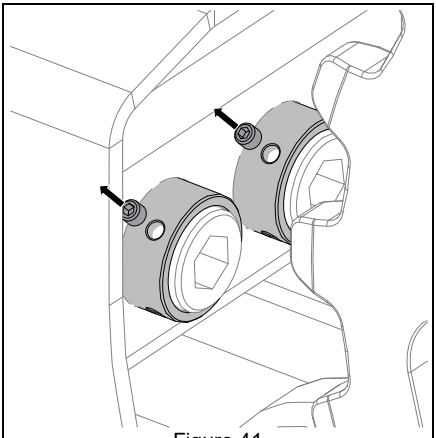

Figure 41

2. Screw in inner and outer large set screws simultaneously to relieve spring load on locking clips. See Figure 42.

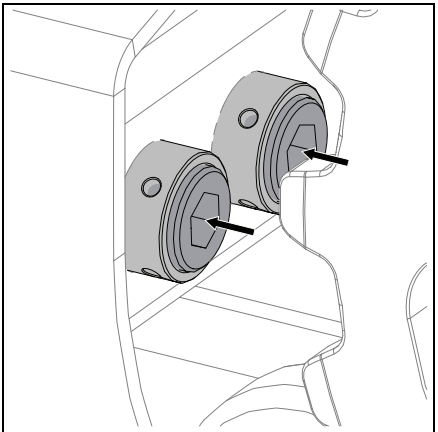

Figure 42

3. Remove both locking clips. See Figure 43.

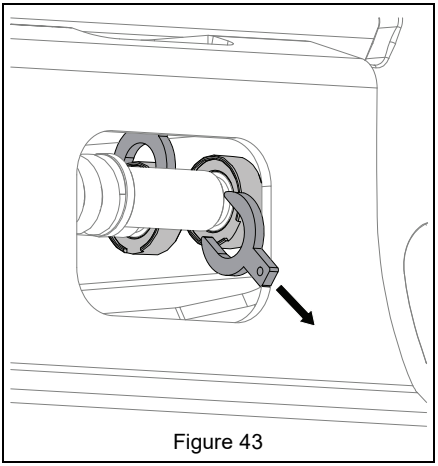

Figure 43

4. Continue to screw in inner and outer large set screws simultaneously to push spring pusher forward so that second locking groove on spring pusher is past spring seat. See Figure 44.

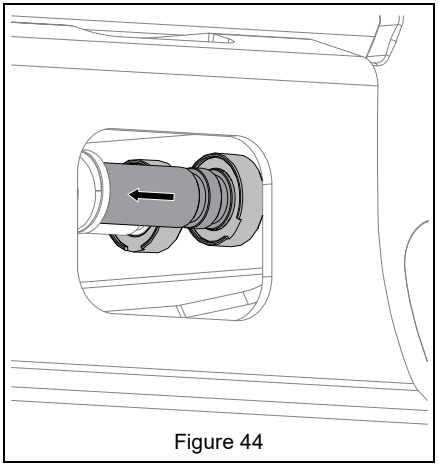

Figure 44

5. Insert locking clips and unscrew large set screws to put spring load onto locking clips. See Figure 45.

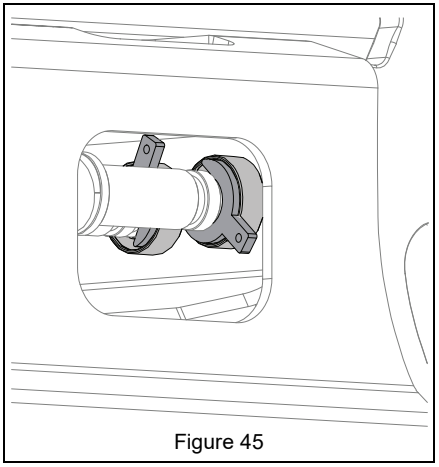

Figure 45

6. With locking clips seated, lightly snug large set screws against spring pusher.
7. Re-install small set screws and tighten to lock in place, retaining large set screws from coming loose and falling out. Torque to 130 in-lb. See Figure 46.

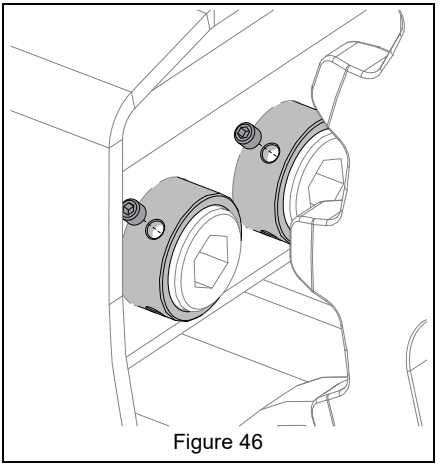

Figure 46

CHECK WHEEL ASSEMBLY

Model 950012

See Figure 47.

Keep tire inflated to pressure listed on tire sidewall.

1. Verify wheel nuts are torqued to 108 – 122 N•m (80 – 90 lb-ft).
2. Inspect tire for wear. Replace as necessary.

WARNING: AVOID INJURY. Explosive separation of tire and rim parts is possible.

- DO NOT inflate tires above recommended pressure.
- DO NOT inflate tires with a compressor; use a hand pump.
- DO NOT stand in front of tire assembly when inflating. Use a clip-on chuck and extension hose long enough to allow you to stand to one side.

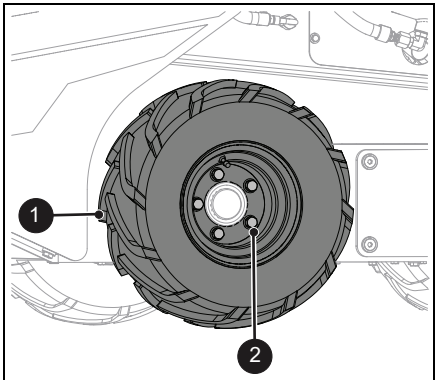

1. Tire
2. Wheel Nut

Figure 47

CHECK FASTENERS

Check for loose or missing hardware.

CHECK COOLANT LEVELS

1. Park unit on a flat, level surface and lower lift arms to ground.
2. Stop engine, remove key and wait for all moving parts to stop and for hot parts to cool.
3. Remove black knob on access cover and swing lid open. See Figure 48.

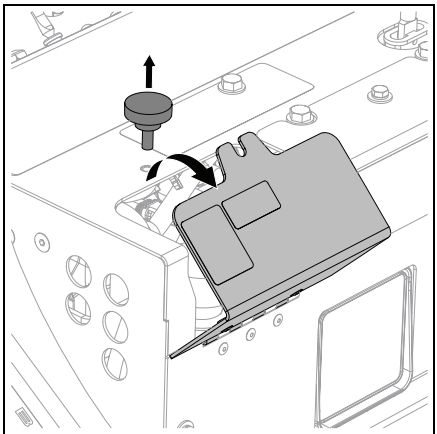

Figure 48

4. Check to see if coolant is visible in overflow tank. If not, add coolant but do not fill beyond line on overflow tank. See Figure 49.

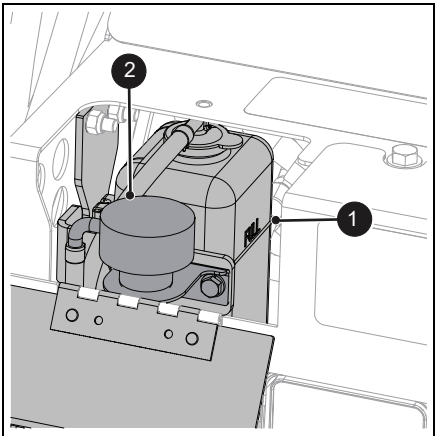

1. Overflow Tank/Full Line
2. Coolant Fill Port

Figure 49

5. If adding coolant is required, fill with a 50/50 mixture of ethylene glycol compatible for diesel engines and water for cold weather protection. See Engine Manual for detailed instructions.

CHECK RADIATOR COOLING FINS

WARNING: AVOID INJURY. Never work under lift arms without lift arm support engaged in raised position.

IMPORTANT: AVOID DAMAGE. Radiator cooling fins must be kept free of debris or engine will overheat.

1. Raise lift arms. See *Raise Lift Arms* on page 31.
2. Remove bolts and washers from left and right sides of radiator cover. See Figure 50.

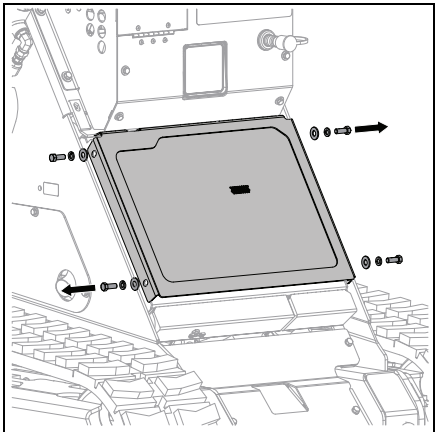

Figure 50

3. Remove radiator cover and set aside. See Figure 51.

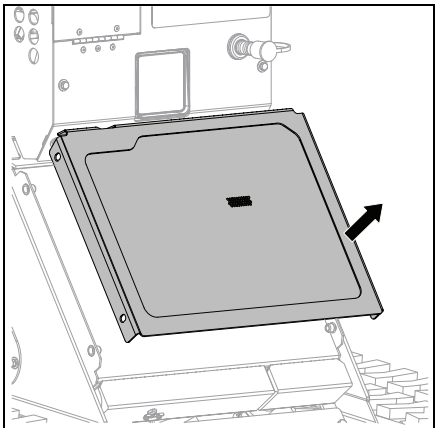

Figure 51

4. Inspect radiator cooling fins for damage or debris build up. Repair any damage and, if necessary, flush radiator with compressed air to remove debris.
5. Reinstall radiator cover using hardware removed earlier. See Figure 52.

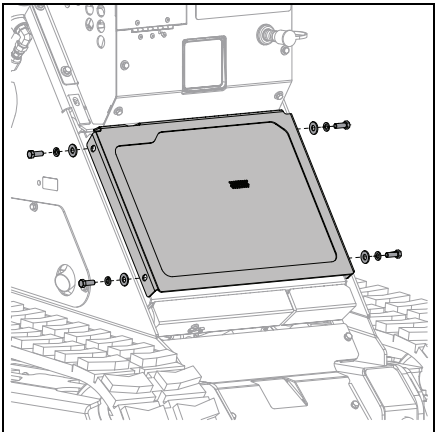

Figure 52

6. Lower lift arms. See *Lower Lift Arms* on page 32.

LUBRICATE UNIT

Check Final Drive Case

IMPORTANT: To check final drive case fluid level, unit must be on flat, level ground.

1. Raise lift arms. See *Raise Lift Arms* on page 31.
2. Locate two plugs in front of unit. See Figure 53.

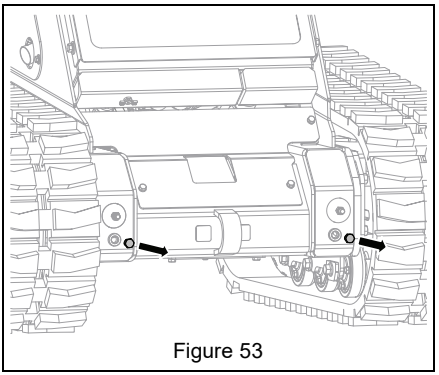

Figure 53

3. Remove plugs to check fluid level. Fluid level should be up to lower hole threads.
4. Use AW46 API hydraulic fluid to add fluid if needed.
5. Wrap plugs in Teflon tape and reinstall plugs.
6. Lower lift arms. See *Lower Lift Arms* on page 32.

Grease Fittings

There are 20 grease zerks on the machine. Clean all zerks of dirt and debris before connecting the grease gun. See Figure 54.

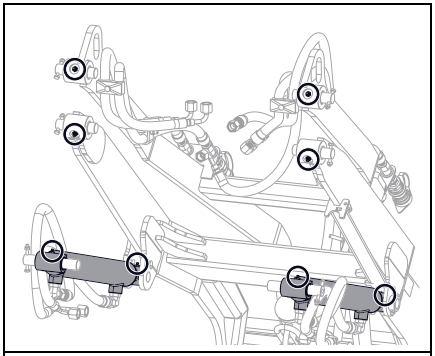

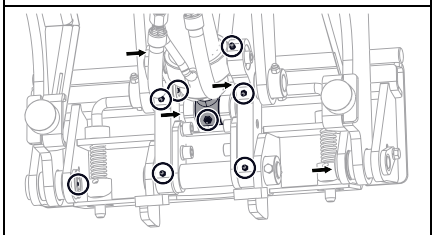

Figure 54

CHECK BATTERY

WARNING: AVOID INJURY. Never work under lift arms without lift arm support engaged in raised position.

WARNING: Battery posts, terminals and related accessories contain lead. Wash hands after handling.

1. Raise lift arms. See *Raise Lift Arms* on page 31.
2. Remove battery access panel by removing four bolts and washers. Set battery access panel and hardware aside. See Figure 55.

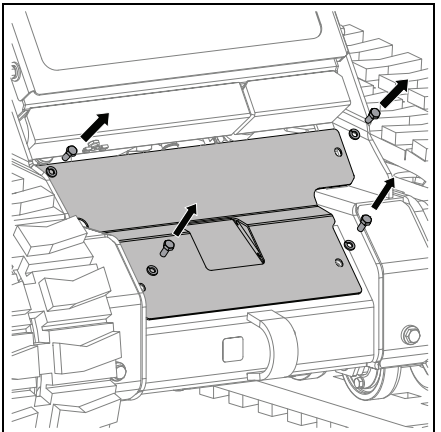

Figure 55

3. Check battery hold down clamp for tightness. Do not overtighten. See Figure 56.

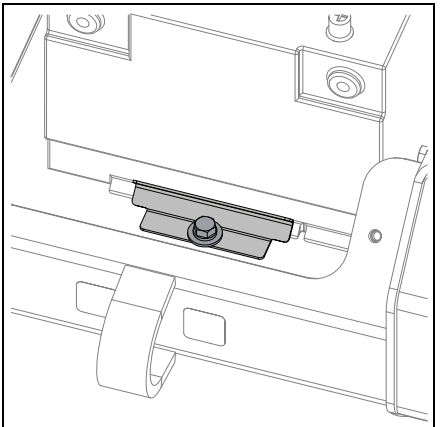

Figure 56

4. Remove any acid corrosion. See *Clean Battery* on page 39.
5. Ensure boot is securely in place over positive (+) terminal. See Figure 58.
6. Reinstall battery access panel using hardware removed earlier. See Figure 57.

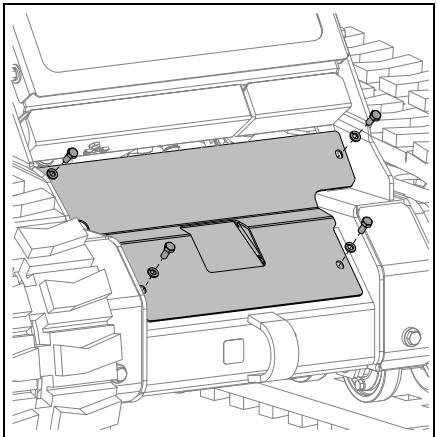

Figure 57

7. Lower lift arms. See *Lower Lift Arms* on page 32.

Clean Battery

CAUTION: AVOID DAMAGE. DO NOT allow tools to contact metal surfaces when removing positive battery cable.

1. Raise lift arms. See *Raise Lift Arms* on page 31.
2. Remove battery access panel. See *Check Battery* on page 38.

See Figure 58.

3. Disconnect battery cables, negative cable first.
4. Clean terminals and battery cable ends with a baking soda and water solution or a wire brush.
5. Dry both terminals before coating with dielectric grease or petroleum jelly.
6. Reinstall battery cables, positive first.

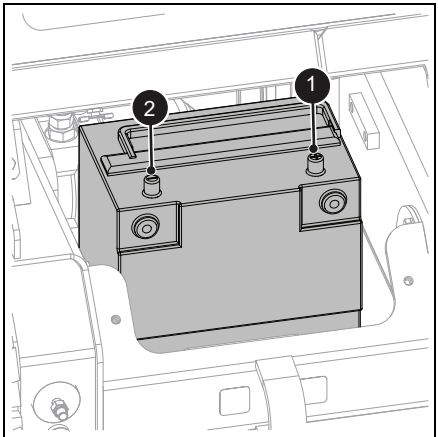

1. Positive (+) Terminal
2. Negative (-) Terminal

Figure 58

7. Reinstall battery access panel using hardware removed earlier. See *Check Battery* on page 38.
8. Lower lift arms. See *Lower Lift Arms* on page 32.

HYDRAULIC FLUID

Check Hydraulic Fluid Level

A large hydraulic reservoir is an integral part of unit's main frame. Fluid level is monitored with a sight glass.

Before engine is first started and after every 25 operating hours, check hydraulic fluid level.

See Figures 59 and 61.

1. Park unit on a flat, level surface.
2. Stop engine, remove key and wait for all moving parts to stop and for hot parts to cool.

NOTICE: Engine should be cold when checking initial fluid level.

3. Remove knobs from service access cover. See Figure 59.

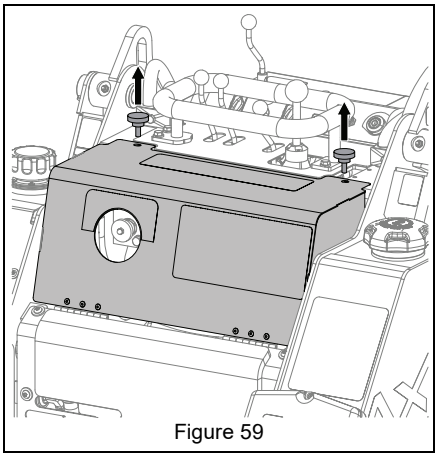

Figure 59

4. Open service access cover for clear visibility of sight glass located on left hand side of frame. See Figure 60.

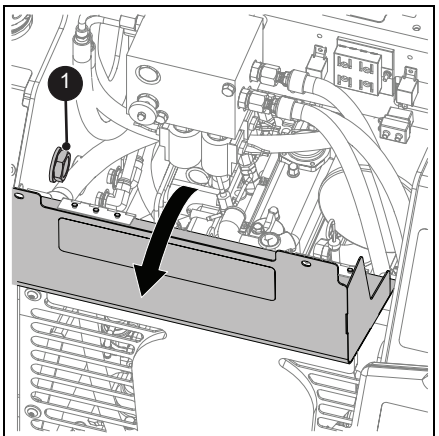

1. Sight Glass

Figure 60

5. Check visible fluid level in sight glass. A dark color indicates fluid presence. See Figure 61.

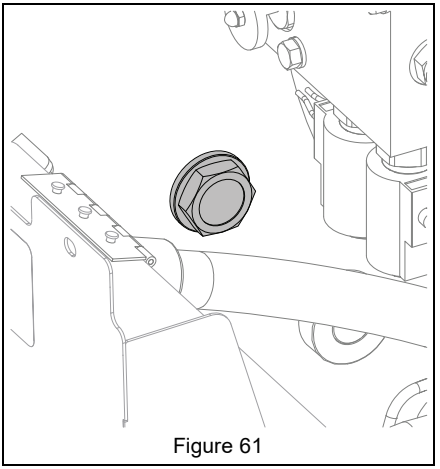

Figure 61

6. Operate unit for about one minute and recheck hydraulic fluid levels.
7. Add hydraulic fluid, if needed. Remove nut and bolt securing hydraulic fluid cap. Remove cap and add hydraulic fluid. Use good quality AW46 API hydraulic fluid. See Figure 62.

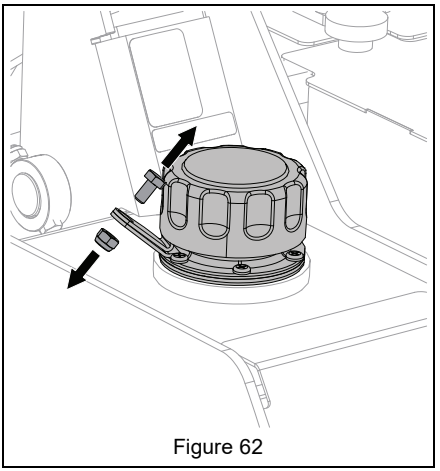

Figure 62

8. Clean any spilled fluid. Reinstall cap and secure with hardware removed earlier.
9. Operate unit for about one minute and recheck hydraulic fluid levels.

Change Upper Hydraulic Fluid Filter

NOTICE: Change upper hydraulic filter after first 50 hours of operation and then every 150 hours or operation.

IMPORTANT: Do not allow dirt to enter hydraulic/hydrostatic system.

1. Stop engine, remove key and wait for all moving parts to stop and for hot parts to cool.
2. Remove screws from filter cover. Set filter cover aside. See Figure 63.

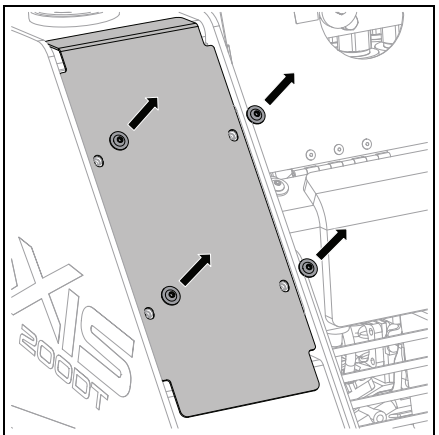

Figure 63

3. Place drain pan underneath hydraulic tank below plug to capture hydraulic fluid when removing the filter cover. DO NOT remove drain plug.
4. Remove bolts securing fluid filter cover. See Figure 64.

NOTICE: Hydraulic fluid will start to flow out as the cover bolts are loosened.

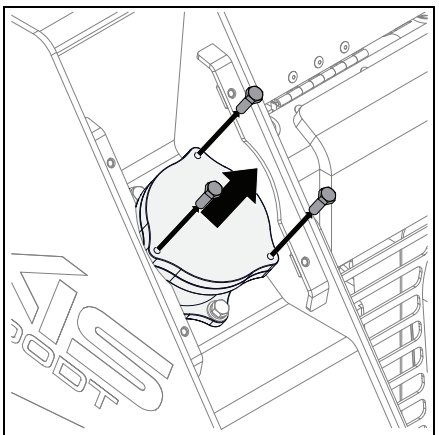

Figure 64

5. Remove bypass and spring from old filter and assemble on to new filter. Install new filter.
6. Wipe filter-mounting surface clean.
7. Reinstall filter cover using hardware removed earlier. See Figure 65.

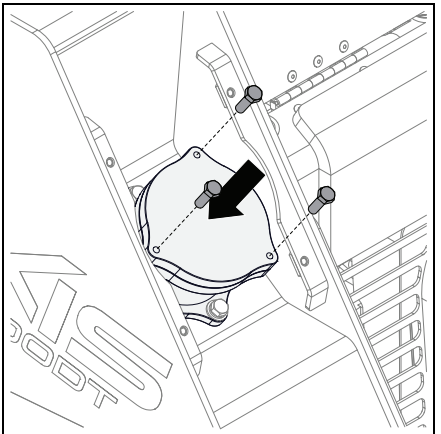

Figure 65

8. Reinstall cover and secure with hardware removed earlier. See Figure 66.

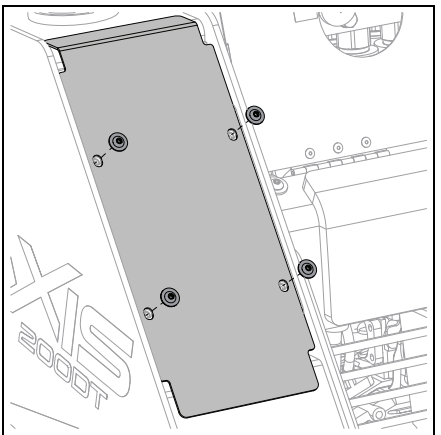

Figure 66

Change Lower Hydraulic Fluid Filters

IMPORTANT: Change lower hydraulic filters every 1000 hours of operation along with hydraulic fluid change. See *Change Hydraulic Fluid* on page 43.

1. With hydraulic fluid drained, remove five screws from foot pad and remove foot pad. See Figure 67.

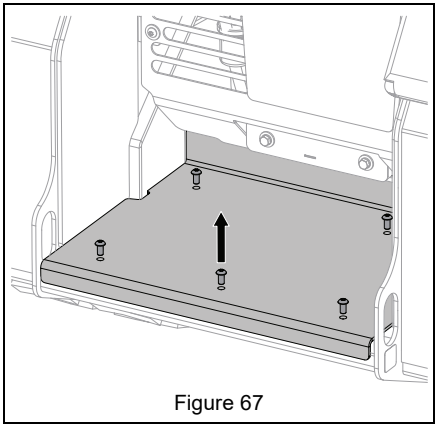

Figure 67

2. Remove hex bolts and washers from fluid tank cover. Set cover aside. See Figure 68.

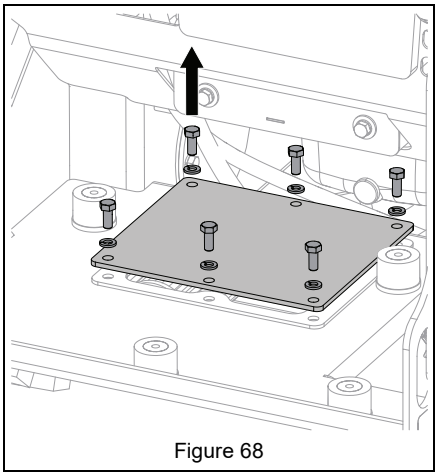

Figure 68

3. Replace both hydraulic filters. See Figure 69.

NOTICE: No tools are required to remove or tighten filters. Use hands to both remove and tighten filters.

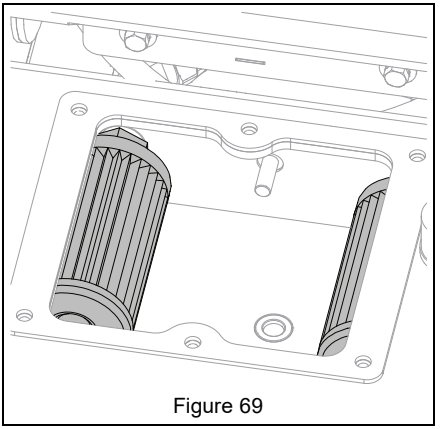

Figure 69

See Figure 70.

4. Remove old cover gasket and clean gasket surface area.
5. Replace with new gasket and apply sealer on both sides.

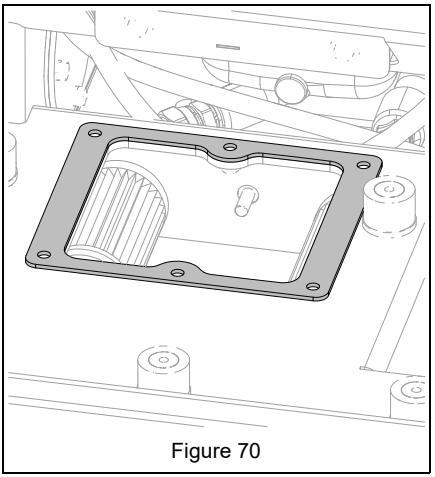

Figure 70

6. Reinstall fluid tank cover with hardware removed earlier. See Figure 71.

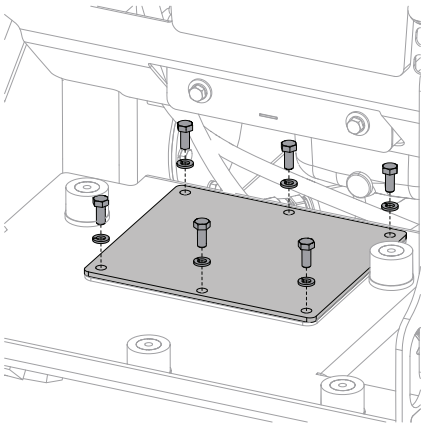

Figure 71

7. Reinstall foot pad with hardware removed earlier. See Figure 72.

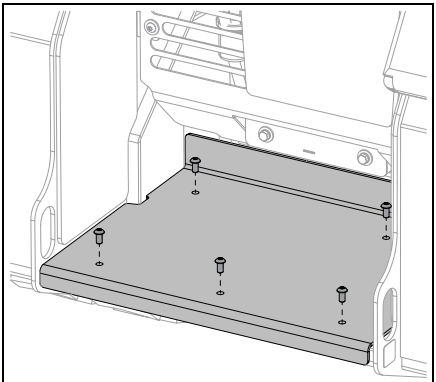

Figure 72

8. Refill reservoir with clean fluid of proper grade and type. See *Change Hydraulic Fluid* on page 43.

DANGER: AVOID SERIOUS INJURY. If any fluid is injected into skin, obtain medical attention immediately or gangrene may result.

WARNING: AVOID SERIOUS INJURY. Escaping hydraulic fluid under pressure can penetrate skin causing serious injury. DO NOT use your hand to check for leaks. Use a piece of cardboard or paper to search for leaks.

9. Start engine and check for leaks. Stop engine and recheck fluid level.

Change Hydraulic Fluid

Hydraulic fluid normally needs to be changed after 1000 operating hours or annually. However, if fluid becomes contaminated, or a major repair has been done to hydrostatic system, it should be changed at once.

1. Stop engine, remove key and wait for all moving parts to stop and for hot parts to cool.
2. Place a container large enough to hold 11 gallons (42 L) of fluid under fluid drain plugs to catch used fluid. Remove fluid drain plugs located on bottom of fluid tank and bottom center of unit. See Figure 73 and Figure 74.

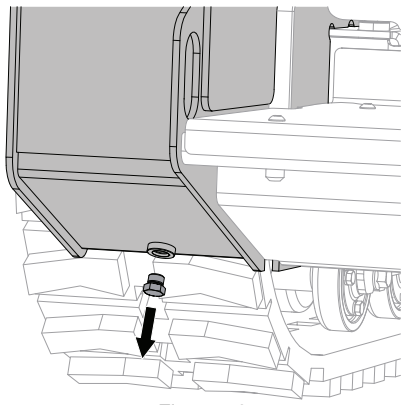

Figure 73

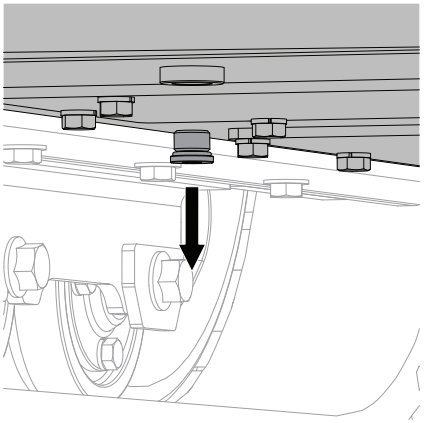

Figure 74

3. Clean fluid from drain port areas, inspect drain plug O-ring and reinstall fluid drain plugs.
4. Replace all hydraulic fluid filters. See *Change Upper Hydraulic Fluid Filter* on page 40 and *Change Lower Hydraulic Fluid Filters* on page 41.
5. Remove nut and bolt securing hydraulic fluid cap. Remove cap. See Figure 62.

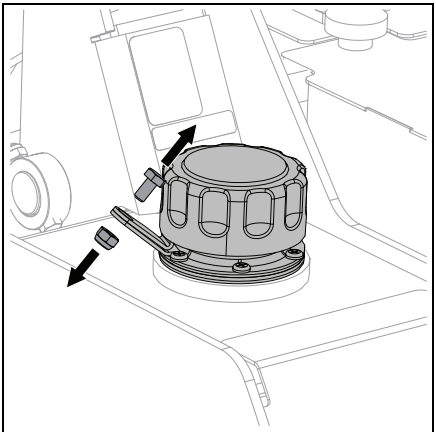

Figure 75

6. Refill reservoir with 11 gallons of new AW46 API hydraulic fluid.
7. Clean any spilled fluid. Reinstall cap and secure with hardware removed earlier.

DANGER: AVOID SERIOUS INJURY. If any fluid is injected into skin, obtain medical attention immediately or gangrene may result.

WARNING: AVOID SERIOUS INJURY. Escaping hydraulic fluid under pressure can penetrate skin causing serious injury. DO NOT use your hand to check for leaks. Use a piece of cardboard or paper to search for leaks.

8. Start engine, push safety interlock button and allow engine to run for five minutes on low idle.
9. Check for leaks.
10. Stop engine and recheck fluid level.

IMPORTANT: Stop engine and relieve pressure before connecting or disconnecting lines. See *Relieve Hydraulic Pressure* on page 25.

IMPORTANT: Tighten all connections before starting engine or pressurizing lines.

FUEL SHUTOFF VALVE

Fuel shutoff valve is located under step plate.

1. Remove five screws from foot pad and remove foot pad. See Figure 76.

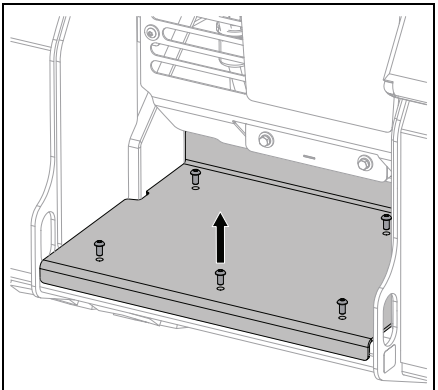

Figure 76

2. Rotate handle to open and close fuel shutoff valve. See Figure 77.

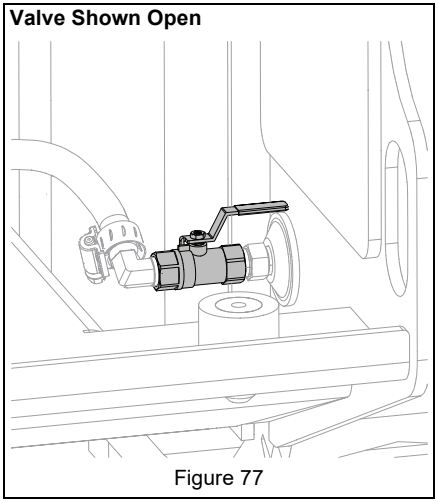

Figure 77

3. Reinstall foot pad with hardware removed earlier. See Figure 78.

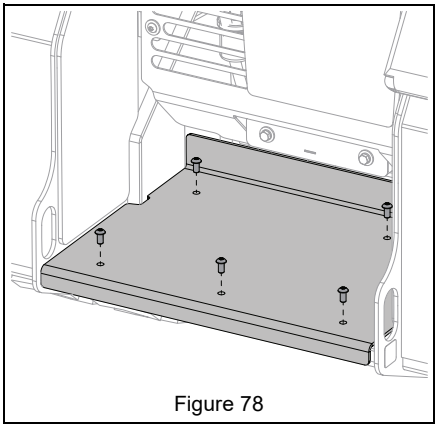
Figure 78

REPLACE FUEL FILTER

Fuel filter is located in engine compartment on left hand side. Fuel filter should be replaced every 300 hours of operation.

1. To replace fuel filter, close fuel shutoff valve. See *Fuel Shutoff Valve* on page 44.
2. Remove four screws and washers securing operator guard to unit. Loosen two screws at top of guard. See Figure 79.

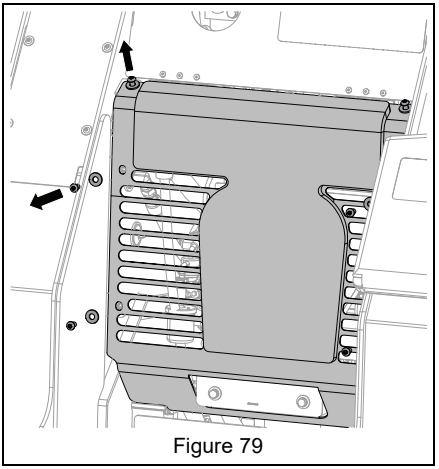
Figure 79

3. Slide operator guard away from unit and set aside. See Figure 80.

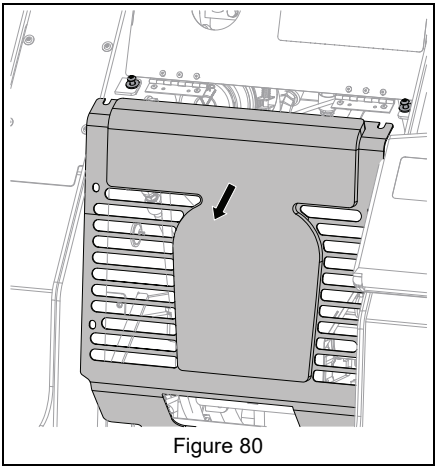
Figure 80

DANGER: POTENTIAL HAZARD

Fuel is extremely flammable and highly explosive. Keep sparks, flames, and cigarettes away.

NOTICE: Prepare paper towels and container to catch excess fuel.

4. Replace filter and verify any loosened clamps are secure. See Figure 81.

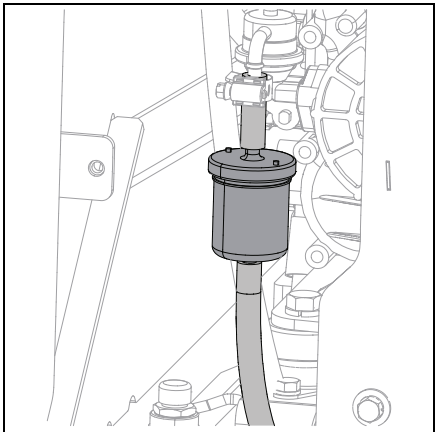

Figure 81

5. Reinstall operator guard using hardware loosened and removed earlier. See Figure 82.

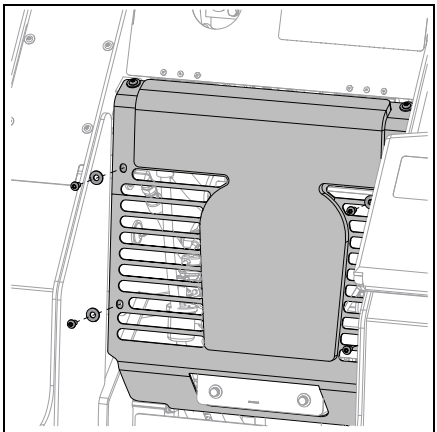

Figure 82

6. Open fuel shutoff valve. See *Fuel Shutoff Valve* on page 44.

IMPORTANT: It is not a requirement to bleed air from fuel system.

7. Start engine and check for leaks. See *Starting Engine* on page 25.

ELECTRICAL SERVICE

Skidsteer is equipped with a 12 volt, negative ground electrical system. All electrical service items can be accessed through service access panel at rear of machine.

ELECTRICAL PANEL

All fuses and circuit breakers terminate to this point.

1. To open access panel, remove knobs from service access cover. Open service access cover to access electrical service items. See Figure 83 and See Figure 84.

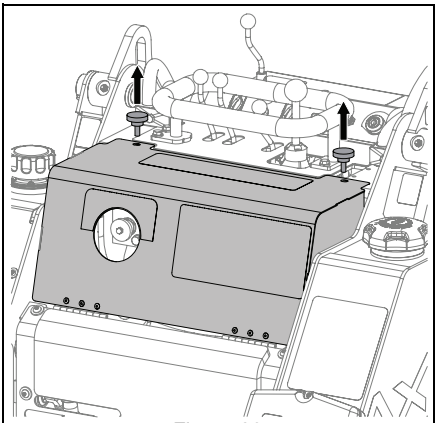

Figure 83

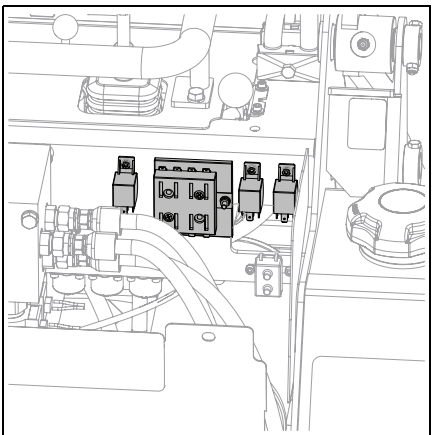

Figure 84

RELAYS AND FUSES

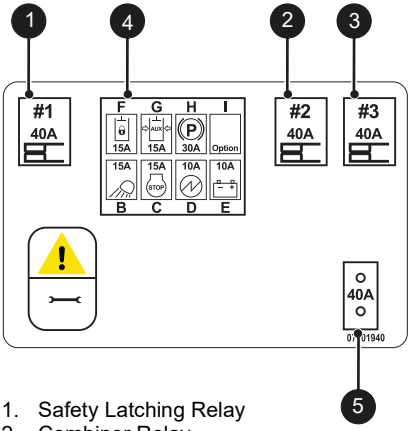

1. Safety Latching Relay
2. Combiner Relay
3. Glow Plug Relay
4. Fuse Panel
   B. Work Lamp, Acc. Plug, Port Lock Valve
   C. Hourmeter, Engine Solenoid
   D. Warning Lights
   E. Alternator
   F. Safety Interlock
   G. Combiner Valves
   H. Brake
   I. Option
5. Main 40A Circuit Breaker

Figure 85

JUMP STARTING BATTERY

Battery may require a jump start if starter motor will not crank engine.

WARNING: AVOID INJURY. Read and understand battery safety rules in *Safety* section before proceeding.

WARNING: AVOID SERIOUS INJURY. Frozen battery can explode and result in death or serious injury.

DO NOT charge a battery containing frozen fluid. Thaw battery before putting on a charger or jump starting.

WARNING: AVOID INJURY. Wear eye protection.

Unit used for jump starting should have a 12 volt, 500 cold crank amperes minimum and 685 cold crank amperes maximum negatively grounded system.

1. Ignition must be in off position.
2. Connect end of one cable to skidsteer boosting lug positive (+) terminal. Connect other end to positive (+) terminal of good battery. See Figure 86.

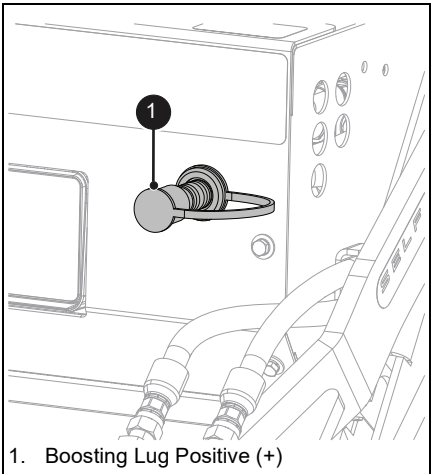

1. Boosting Lug Positive (+)

Figure 86

3. Connect end of cable to negative (-) terminal of good battery. Connect other end to pivot plate on quick-tach frame. See Figure 87.

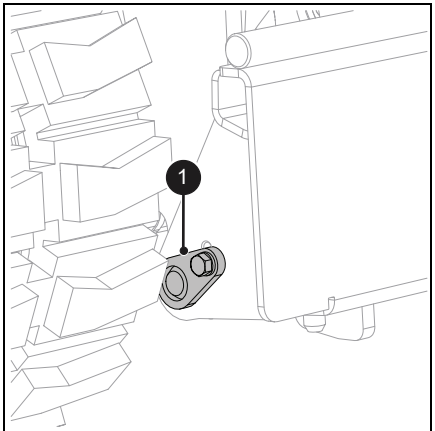

1. Pivot Plate Ground Location

Figure 87

IMPORTANT: Keep cables away from moving parts.

4. Start engine.

CAUTION: AVOID DAMAGE. To prevent damage to electrical components, turn off all lights and accessories. Make certain that engine is at idle speed before disconnecting jumper cables.

5. Once engine has started, disconnect negative end of cable from booster battery. Disconnect other end of cable from ground.
6. Disconnect positive (+) end of cable booster battery. Disconnect other end of cable from skidsteer boosting lug.

CHARGING BATTERY

Battery may require a charge if discharged and starter motor will not crank engine.

WARNING: AVOID INJURY. Read and understand battery safety rules in *Safety* section before proceeding.

WARNING: AVOID SERIOUS INJURY. Frozen battery can explode and result in death or serious injury.

DO NOT charge a battery containing frozen fluid. Thaw battery before putting on a charger or jump starting.

WARNING: AVOID INJURY. Wear eye protection.

1. Connect a 12V charger with less than 5A charging capability to unit. See *Jump Starting Battery* on page 47 for connecting instructions.
2. Follow charger instructions.

WARNING: AVOID INJURY. Do not over charge battery.

3. Disconnect charger and start engine.

TROUBLESHOOTING

Problem	Probable Cause	Correction
Engine does not start.	Battery is discharged.	Charge battery. See *Charging Battery* on page 48.
	Connection between battery and battery cables is poor.	Tighten and/or clean battery and battery cables. See *Clean Battery* on page 39.
	Electrical system is faulty.	Contact your Gravely dealer.
	Engine is faulty.	Contact your Gravely dealer.
Engine turns over but does not start.	Fuel tank is empty.	Fill fuel tank. See *Before Operating Unit* on page 23.
	Fuel shut-off valve is closed.	Open shut-off valve.
	Improper starting procedure.	See *Starting Engine* on page 25.
	Glow plug burnt out.	Replace glow plug.
Noisy hydraulic system.	Air in system.	Check fluid level. Add if necessary.
	Loose suction line and/or fittings.	Tighten all fittings and connections.
	Clogged fluid filter.	Replace fluid filter.
	Hydraulic fluid too heavy.	Warm up hydraulic fluid when cold.
	Internal pump or motor damage	Contact your Gravely dealer.
Erratic or no output on drive.	Hydraulic fluid too heavy.	Use proper viscosity fluid.
	Hydraulic fluid level too low.	Check fluid level. Add if necessary.
	Drive coupling between engine and pump broken.	Check couplings. Replace if necessary.
Loss of hydraulic fluid flow from gear pump.	Reservoir low on fluid.	Check fluid level. Add if necessary.
	Drive couplings between engine and pump broken.	Check couplings. Replace if necessary.
	Hydraulic gear pump not functioning.	Inspect and repair if necessary.
Hydraulic cylinders do not function properly.	Loss of hydraulic flow from gear pump.	See above.
	Safety system not releasing.	Troubleshoot system operations.
Fluid overheats.	Reservoir low on fluid.	Check fluid level. Add if necessary.
	Auxiliary control lever engaged.	Return auxiliary lever to neutral.
	Relief valve setting too high or too low.	Set to correct pressure.
Engine overheats.	Cooling water insufficient.	Add water.
	Radiator clogged with dust.	Clean radiator.
	Auxiliary valve engaged.	Return to neutral position.
Noisy drive operation.	Chain too loose.	Replace chain.
No electrical functions.	Fuse blown.	Check fuses. Replace blown fuse.
Brake will not release	Brake pin still engaged.	Press Brake button once more.
	Fuse blown.	Check fuses. Replace blown fuse.
	Defective solenoid.	Diagnose and replace if necessary.
	Corroded brake pin.	Clean or replace as necessary.
	Tension on brake pin.	Jog unit forward and rearward slightly to relieve tension.

STORAGE

DANGER: POTENTIAL HAZARD

Fuel is extremely flammable and highly explosive. Keep sparks, flames, and cigarettes away.

- Drain fuel from fuel tank outdoors in an open area. Wipe up any fuel spills.
- Do not drain fuel near an open flame or sparks.
- Never smoke when handling fuel.
- Store fuel in an approved container and keep it out of reach of children. Never keep more than a 30-day supply of fuel.

SHORT-TERM STORAGE

IMPORTANT: NEVER wash unit with high-pressure water or store outdoors.

1. Lower lift arms and stop engine. Remove key.
2. Clean external parts of entire unit. Clean dirt and debris from engine's cylinder head fins and blower housing.
3. Allow unit to cool and clean with mild soap and water.
4. Apply a light layer of oil or anti-rust compound on bare metal areas.
5. Tighten all hardware to correct specifications.
6. Inspect unit for visible signs of wear or damage. Repair as needed.
7. Prepare fuel system for storage.

NOTICE: Gravely recommends using a quality fuel stabilizer in all fuel. Diesel left in fuel system without a stabilizer, even for short periods of time, deteriorates and leaves gummy deposits in system that may damage fuel pumps, injectors and fuel hoses, filter and tank. For best effectiveness, add stabilizer to all fuel containers whenever purchasing fuel. Add stabilizer to container before adding fuel.

a. Add fuel stabilizer (see *Fuels, Lubricants, and Capacities* on page 31) or equivalent according to manufacturer's instructions to fuel tank and any fuel containers with remaining fuel.

b. Run engine outdoors for at least five minutes to allow stabilizer to reach to reach fuel pump and injectors.

8. Turn ignition key to off position and remove from ignition.
9. Store unit in a cool, dry, protected area. DO NOT store unit outdoors.

LONG-TERM STORAGE

1. Perform short-term storage procedures.
2. Unit should be parked on a level surface with lift arms lowered, engine off, and key removed.

See Figure 88.

3. Drain fuel tank.
   - Remove plug from bottom of fuel tank. Drain fuel into an approved container.
   - Replace plug on bottom of tank.
   - Restart engine and run until it stops.

NOTICE: Now is best time to replace fuel filter because fuel tank is empty. See *Replace Fuel Filter* on page 45.

- Dispose of fuel properly.
- Refer to Maintenance and Engine Manual for detailed instructions of items below.

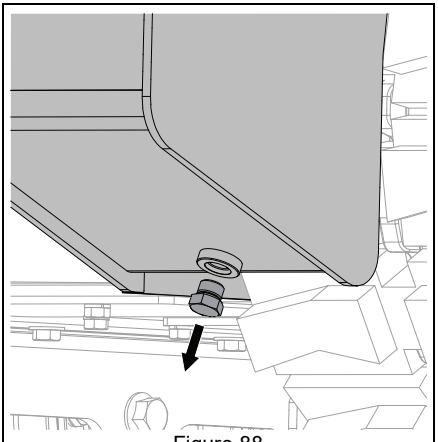

Figure 88

4. See Engine Manual for proper engine storage recommendations.
5. Grease unit.
6. Check tire pressure (950012 only).
7. Fully charge battery. Store in a cool dry area. Charge battery once a month while in storage.

WARNING: AVOID DAMAGE. Storing battery in a cold environment for extended periods of time will shorten the life of a battery.

8. Paint all scratched surfaces.
9. Store unit in a clean, dry storage area. Remove key from ignition switch. Cover unit to protect it.

ACCESSORIES

WARNING: Use of attachments other than those recommended by Gravely could cause injury to operator and/or damage to unit. DO NOT use auxiliary hydraulic equipment that has a pressure rating below 3000 psi. Serious injury and/or damage to unit may occur.

See your Gravely dealer for a complete list of compatible accessories and attachments for your unit.

For instructions on proper use of other attachments, refer to attachment's Owner/Operator Manual.

These attachments are available from your Gravely dealer.

Description	Part No.
36" Bucket	85001400
42" Bucket	85001500
Pallet Fork	85002000

SPECIFICATIONS

	950010	950011	950012
General Information			
Fuel Capacity (gal)	10		
Fuel Capacity (ltr)	37.9		
Fuel Capacity (qt)	40		
Fuel System	Diesel		
Max Incline Angle	72		
Max Lift Capacity (lb)	489	497	631
Max Lift Capacity (kg)	221.8	225.4	286.2
Tipping Capacity (lb)	1397	1420	1262
Tipping Capacity (kg)	633.6	644.1	572.4
Maximum Bucket Roll Back Angle	32.7°		
Bucket Dump Angle	45°		
Lift	Single Joystick		
Curl	Single Joystick		
Engine			
Engine Brand	Kubota		
Engine Name	D1105-E4		
Horse Power Intermittent (SAEJ1349) (HP/rpm)	23.9/3000		
Horse Power Continuous (SAEJ1349) (HP/rpm)	20.7/3000		
Idle RPM	1275		
Max RPM (No Load)	3220		
Transaxle			
Drive Type	Track		Wheel
Front Wheels			
Front Tire Diameter (in)			18
Front Tire Diameter (cm)			45.7
Front Tire Width (in)	9.1	7.1	8.5
Front Tire Width (cm)	23.1	18	21.6
Front Wheel Diameter (in)			8
Front Wheel Diameter (cm)			20.3
Rear Wheels			
Rear Tire Diameter (in)			18
Rear Tire Diameter (cm)			45.7
Rear Tire Width (in)	9.1	7.1	8.5
Rear Tire Width (cm)	23.1	18	21.6
Rear Wheel Diameter (in)			8
Rear Wheel Diameter (cm)			20.3
Speed			
Max Forward Speed (mph)	5.3		3.2
Max Forward Speed (km/h)	8.5		5.1
AXIS			
Ground Clearance (in)	6		5
Ground Clearance (cm)	15.2		12.7
Hydraulic System			
Aux System Flow (gpm)	14		
Low Flow (gpm)	5.5		
System Pressure (psi)	3000		
Tank Capacity (gal)	11		
Tank Capacity (ltr)	41.6		

*Specifications and design are subject to change without notice.

DIMENSIONS			
	950010	**950011**	**950012**
Heights			
Height (in)	51.3		50.3
Height (cm)	130.3		127.8
Height Operating with Std. Bucket (in)	85		84
Height to Hinge Pin (in)	68.6		67.6
Widths			
Track / Wheel Width (in)	9.1	7.1	9.5
Track / Wheel Width (cm)	23.1	18	24.1
Overall Width (in)	41.2	35.6	41
Overall Width (cm)	104.6	90.4	104.1
Lengths			
Length (in)	63.3		
Length (cm)	160.8		
Length Operating with Std. Bucket (in)	82		
Weights			
Assembled Weight (lb)	2525	2465	2125
Assembled Weight (kg)	1145.1	1117.9	963.7

*Specifications and design are subject to change without notice.

Model 950010

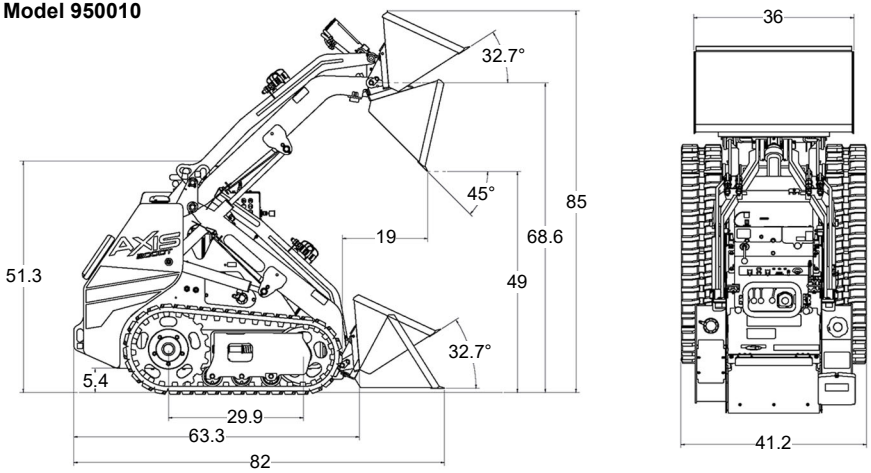

Figure 89

Model 950011

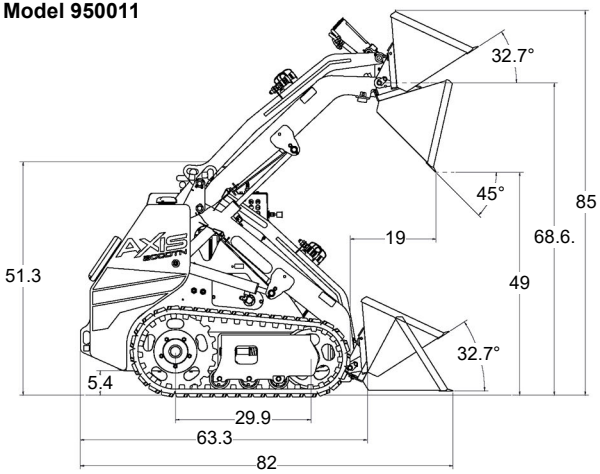

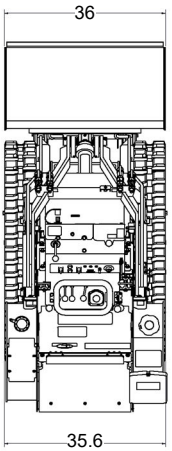

Model 950012

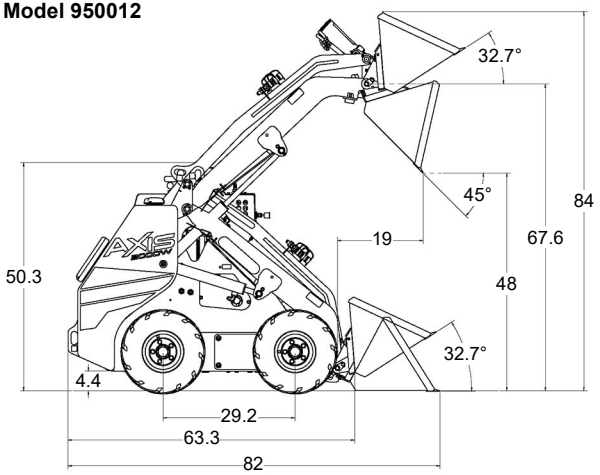

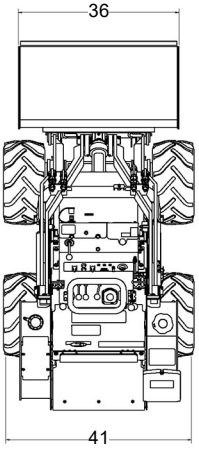

Figure 90

Outdoor Power Equipment Limited Warranty

AriensCo warrants to the original purchaser that Gravely brand products purchased on or after 09/01/2022 will be free from defects in material and workmanship for the time period noted in the chart below.

If any product, EXCEPT AXIS skidsteer, is rented or leased, then the duration of these warranties shall be 90 days after the date of purchase.

An authorized Gravely dealer will repair any defect in material or workmanship, and repair or replace any defective part, subject to the conditions, limitations and exclusions set forth herein. Such repair or replacement will be free of charge (labor and parts) to the original purchaser; except as noted below. Pick-up and delivery are at the owner's expense.

The warranty code is found on the model and serial number identification label on the unit.

Warranty Code	Product Group	Warranty Period
AA	Serialized Attachments	1 Year.**
AB	Serialized Attachments	2 Years.**
CH	Pro-Turn Z and Pro-Turn ZX Mowers	4 Years or 750 Hours.*
CJ	Pro-QXT	4 Years or 500 Hours.*
CK	Compact-Pro and Pro-Walk Hydro Mowers	4 Years or 750 Hours.* No Hour Limit for First 2 Years.
CL	Pro-Turn 100 and Pro-Stance Mowers	5 Years or 1000 Hours.* No Hour Limit for First 2 Years.
CM	Pro-Turn 200 and 300 Mowers	5 Years or 1250 Hours.* No Hour Limit for First 2 Years.
CN	Pro-Turn 500, 600 and Mach-One Mowers	5 Years or 1500 Hours.* No Hour Limit for First 2 Years.
CS	AXIS Skidsteer	1 Year or 1000 Hours.* Includes Rented or Leased Products.
HF	ZT-X Mowers	3 Years or 300 Hours.*
HG	ZT-XL Mowers	4 Years or 400 Hours.*
HH	ZT-HD and Z-Stance Mowers	4 Years or 500 Hours.*
UG	Atlas JSV	1 Year.

* Whichever comes first.

** AXIS Attachments see Limitations chart below.

Special Extensions

The chart below details special **extensions** to warranty terms. Warranty terms are total time periods covered. If any product is rented or leased, there are no extensions to the 90-day warranty.

Warranty Code	Warranty Term Extension	Warranty Period	Detail
CL, CM, CN	Mower Deck Shell and Main Frame	Lifetime Limited.	Warranty is for parts only after the initial warranty period. Components are covered for manufacturer's defect only, not wear.

Exclusions and Limitations

The charts below detail special **exclusions and limitations** to this warranty.

Warranty Term Exclusions	Warranty Period
Air filters, brake arms, brake linings, brake shoes, brushes, cutters, fuel filters, halogen headlights, knives, halogen light bulbs, lubricants, mower blades, oil, oil filters, spark plugs, scraper blades, shear bolts, skid shoes and spoon tines.	Components are not covered under warranty.

Hydro-Gear Transaxle Limitation
See Hydro-Gear warranty. The warranty is administrated by AriensCo. Refer to www.gravely.com for warranty statement.

Warranty Term Limitations	Warranty Period
Cloth, Plastic and Rubber Components. Mufflers, Tires and Belts.	Components are covered for manufacturer's defect only, not wear.
AXIS Bucket and Fork Attachments	Warranty is administered by Erskine Attachments, LLC. Follow Erskine warranty statement in back of Attachment Operator's Manual.

Exclusions – Items Not Covered by This Warranty

- Parts that are not genuine Gravely service parts are not covered by this warranty and may void the warranty if the parts result in premature wear or damage to the product.
- Damages resulting from the installation or use of any part, accessory, or attachment which is not approved by the AriensCo for use with product(s) identified herein are not covered by this warranty.
- Any misuse, alteration, improper assembly, improper adjustment, neglect, or accident which requires repair is not covered by this warranty.
- Repairs or adjustments required due to failure to use fresh fuel or failure to properly prepare the unit for periods of non-use.
- **Use of gasoline blends exceeding 10% ethanol voids any and all warranties.**
- **Any tampering with the hour meter voids any and all warranties.**
- Products are designed to the specifications in the area that the product was originally distributed. Different areas may have significantly different legal and design requirements. This warranty is limited to the requirements in the area in which the unit was originally distributed. AriensCo does not warrant this product to the requirements of any other area. Warranty service is limited to service within the area originally distributed.
- In countries other than the United States and Canada, contact the AriensCo dealer for warranty policies that govern within your country. Rights may vary from country to country and within any one country.

Evaporative Emissions Control Warranty Exception

As required by the California Air Resources Board (CARB) and the US Environmental Protection Agency (EPA) the evaporative emissions control system is warranted to the ultimate purchaser, and any subsequent owner, for two years.

The CARB and EPA evaporative emissions control system warranty is described in a separate evaporative emission control warranty statement.

Special Exclusions for Job-site Vehicles

The following uses void the warranty terms on Atlas JSV (Warranty Code UG) vehicles:

- Renting or leasing the vehicle.
- Using the vehicle to tow or carry loads in excess of the limits specified in the operator's manual.
- Modifying the vehicle with parts and accessories that are not genuine or authorized Gravely parts or accessories.
- Modifying the vehicle without express written authorization from Gravely.
- Operating the vehicle when it has not been completely and properly assembled and pre-delivered by an authorized Gravely dealer.

Battery Warranty

Battery warranty is one year. Units used for rental or lease have no exceptions to the 90-day warranty. Total battery claim reimbursement will not exceed 45.00 USD.

Transmissions

The chart below details transmission warranty information. Transmission warranty terms may vary from the specific terms of this warranty. If inconsistent, the terms of the transmission warranty shall apply to the transmission and its component parts.

Transmission Manufacturer	Detail
Hydro-Gear Transaxle	See Hydro-Gear warranty. The warranty is administrated by AriensCo. Refer to www.gravely.com for warranty statement.
Parker Hannifin Drive & Valve Systems	Parker Transaxles, Pumps, Wheel Motors and Valves are warranted for the length of equipment warranty period. Refer to Warranty Code chart above. Warranty is administered by AriensCo.

Engines

The chart below details engine warranty information. Engine warranty terms may vary from the specific terms of this warranty. If inconsistent, the terms of the engine warranty shall apply to the engine and its component parts.

Engine Manufacturer	Detail	
Gravely V-Twin	Serial Number 0000400 and lower	4 Years or 500 Hours, whichever comes first. Refer to www.gravely.com for warranty statement.
	Serial Number 0000401 and higher	4 Years or 750 Hours, whichever comes first. Refer to www.gravely.com for warranty statement.
Yamaha	Yamaha-branded engines are warranted by the manufacturer and the warranty is administrated by AriensCo. Refer to www.gravely.com for warranty statement.	
Briggs & Stratton, Kawasaki, Kohler, Kubota	Covered by the engine manufacturer's warranty. Refer to the engine manufacturer's warranty statements.	

Parts and Accessories

Service replacement parts and non-serialized accessories are warranted for 90 days from date of purchase. Labor is not included.

Customer Responsibilities

Register the product immediately at the time of sale. If the dealer does not register the product, the customer must register the unit on-line at www.gravely.com.

To obtain warranty service, the **original purchaser** must:

- Ensure that the maintenance and adjustments explained in the Operator's Manual are routinely completed.
- Promptly notify AriensCo or an authorized Gravely service representative of the need for warranty service.
- Transport the product to and from the place of warranty service at owner's expense.
- Have the warranty service performed by an authorized Gravely service representative.

To find an authorized dealer use the dealer locator on our websites, or contact us by mail or phone.

Globally except Australia or New Zealand:	Australia:	New Zealand:
AriensCo 655 W. Ryan Street Brillion, WI 54110 Phone: (920) 756 - 4688 www.gravely.com	Roy Gripske & Sons Pty Ltd 11 Sodium Street Narangba Queensland 4504 Australia Phone: (61130) 036 3004 www.rgs.com.au	Masport Ltd 320 Ti Rakau Drive East Tamaki Auckland 2013 New Zealand Phone: 0800 627 7678 www.masport.co.nz

Disclaimer

AriensCo may from time to time change the design of its products. Nothing contained in this warranty shall be construed as obligating the AriensCo to incorporate such design changes into previously manufactured products, nor shall such changes be construed as an admission that previous designs were defective.

Limitation of Remedy and Damages

AriensCo liability under this warranty, and under any implied warranty that may exist, is limited to repair of any defect in workmanship, and repair or replacement of any defective part. AriensCo shall not be liable for incidental, special, or consequential damages (including lost profits). Some states do not allow the exclusion of incidental or consequential damages, so the above limitation or exclusion may not apply to you.

AriensCo shall not be held liable for damages, including premature wear and tear, or injuries caused by installation of unauthorized parts and accessories or for parts and accessories not installed by an authorized Gravely dealer.

Australian Consumer Law

The following applies solely to warranties subject to Subsection 102(1) of the Australian Consumer Law: Our goods come with guarantees that cannot be excluded by the Australian Consumer Law. You are entitled to a replacement or refund for a major failure and for compensation for any other reasonably foreseeable loss or damage. You are also entitled to have the goods repaired or replaced if the goods fail to be of acceptable quality and failure does not amount to a major failure.

Disclaimer of Further Warranty

AriensCo makes no warranty, express or implied, other than what is expressly made in this warranty. If the law of your state provides that an implied warranty of merchantability, or an implied warranty of fitness for particular purpose, or any other implied warranty, applies to AriensCo then any such implied warranty is limited to the duration of this warranty. Some states do not allow limitations on how long an implied warranty lasts, so the above limitation may not apply to you.

This warranty gives you specific legal rights, and you may also have other rights which vary from region to region.

655 West Ryan Street
Brillion, WI 54110

www.gravely.com

WARNING: Cancer and Reproductive Harm - www.P65Warnings.ca.gov

ARIENS | CO

PRINTED in WISCONSIN