WORX NITRO

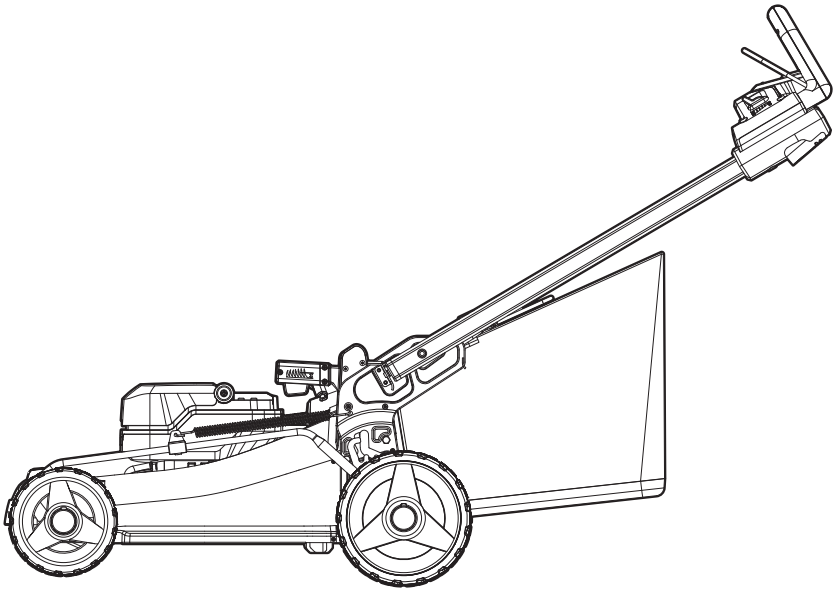


| | | |
|---|---|---|
| 40V 21 in. Brushless Self-Propelled Lawn Mower | EN | P08 |
| | F | P17 |
| | ES | P29 |


HELPLINE NUMBER
NUMÉRO DU SERVICE D'ASSISTANCE
NÚMERO DE LÍNEA DE AYUDA
1-866-354-WORX (9679)

# WP773 WP773.X

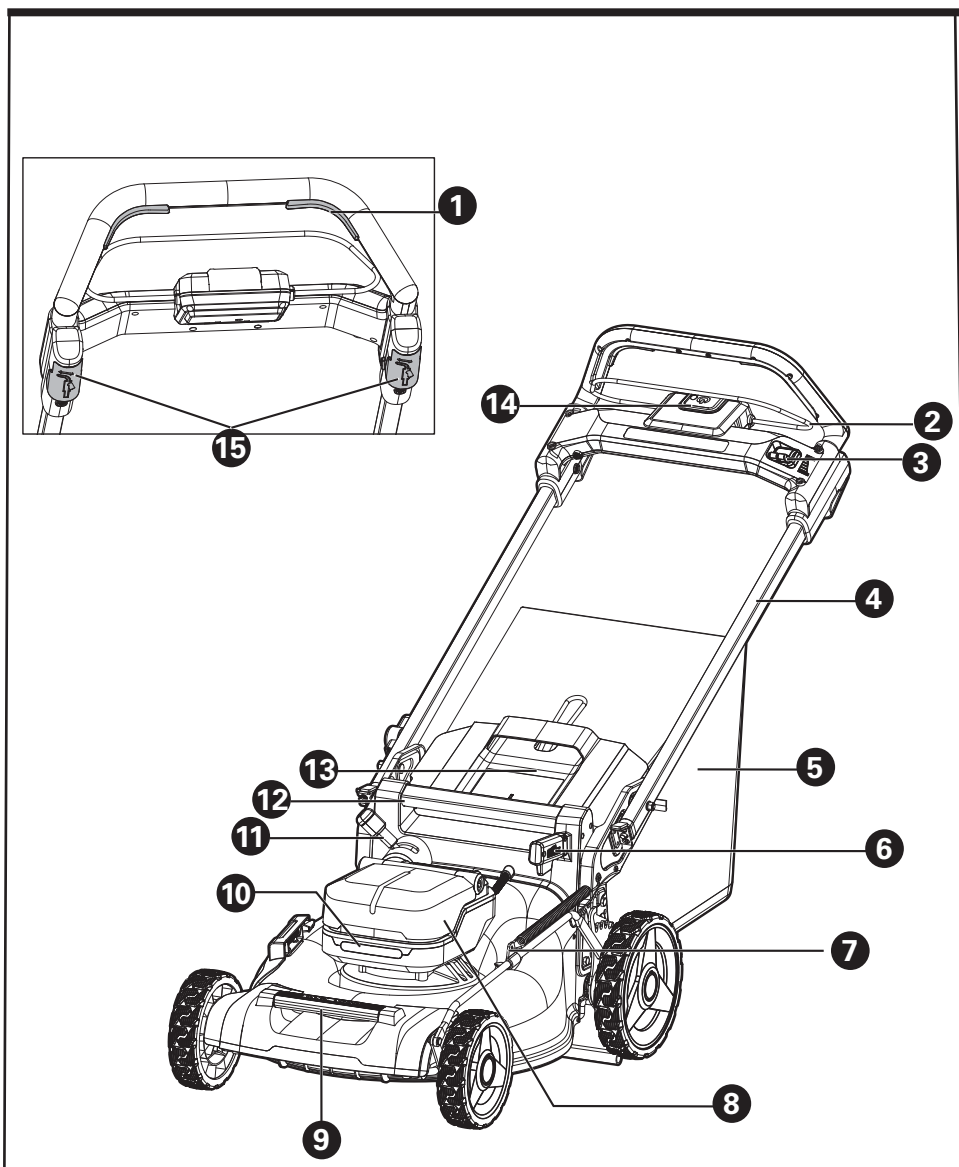
1
15
14
2
3
4
13
5
12
11
6
10
7
8
9

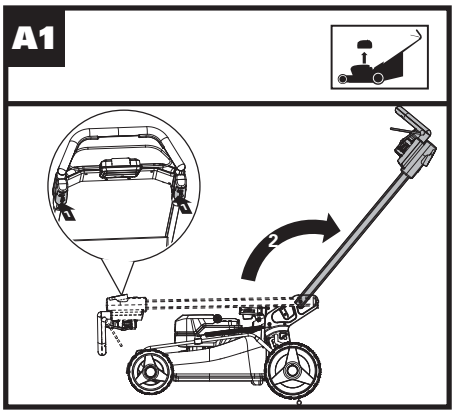
A1

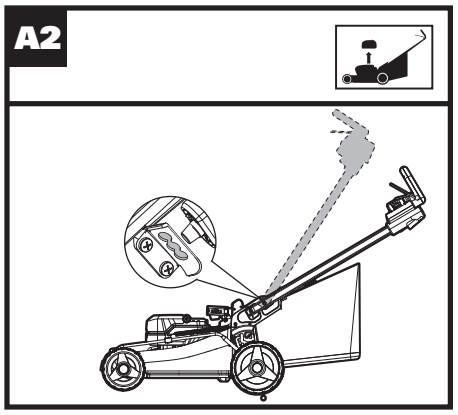
A2

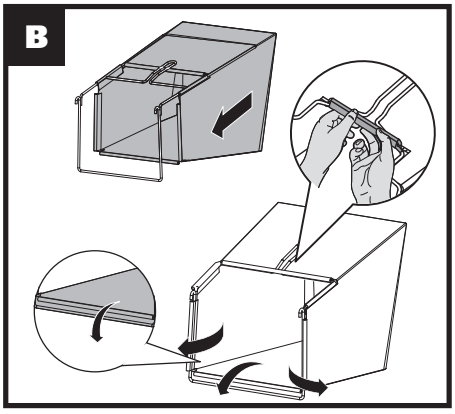
B

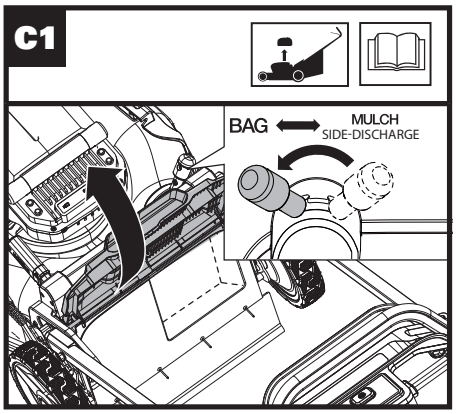
C1
BAG
MULCH
SIDE-DISCHARGE

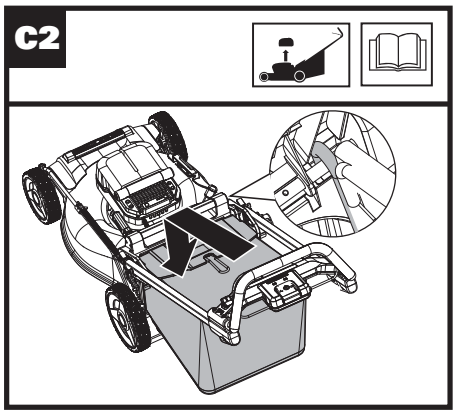
C2

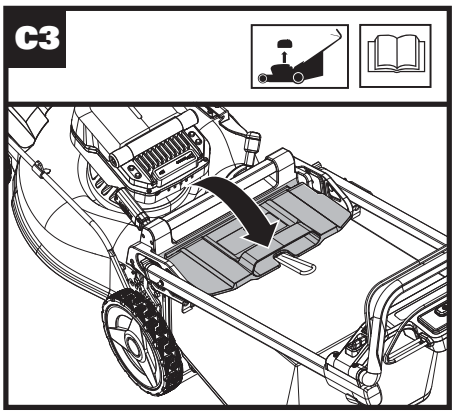
C3

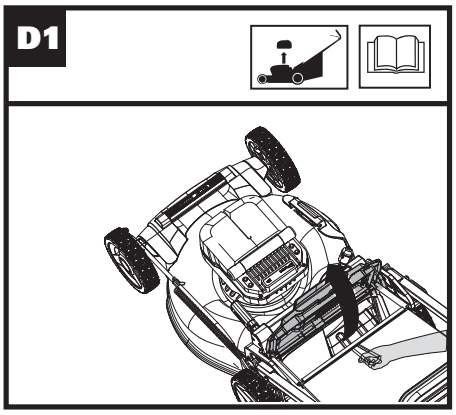
D1

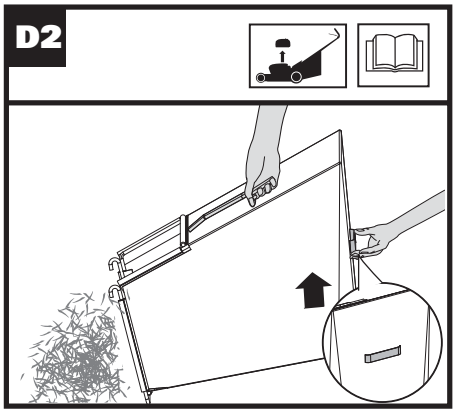
D2

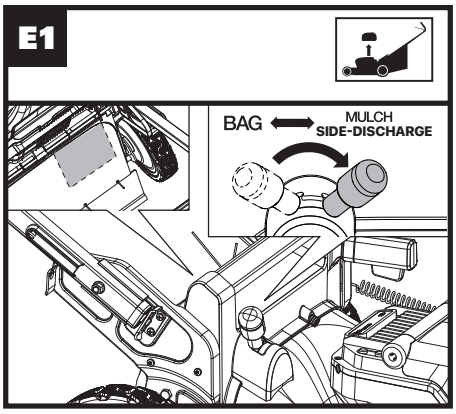
E1
BAG
MULCH
SIDE-DISCHARGE

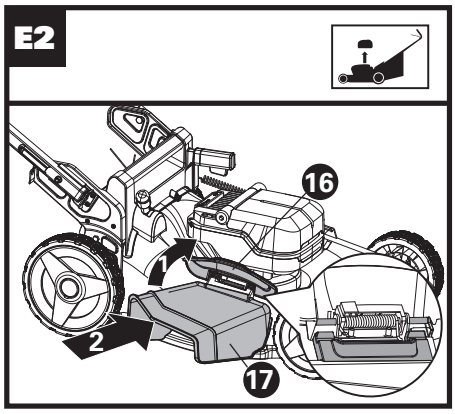
E2
16
1
2
17

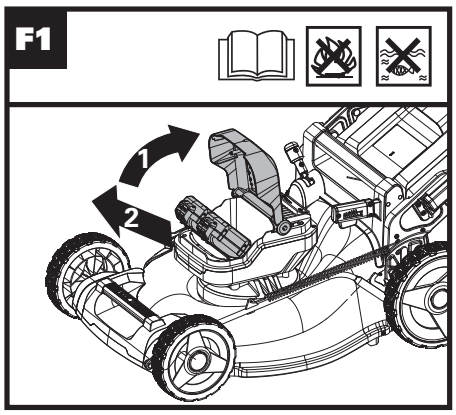
F1
1
2

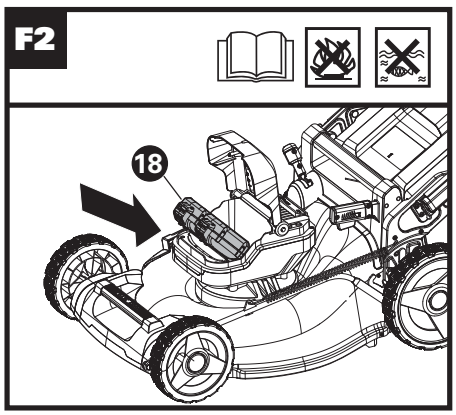
F2
18

G1

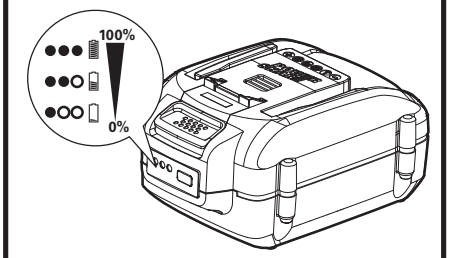


G2

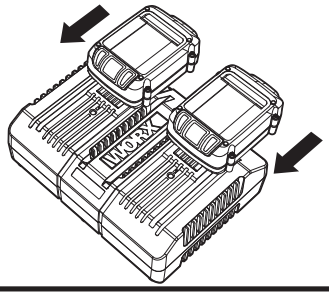

H

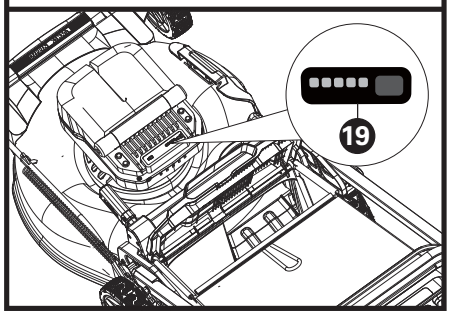


I1

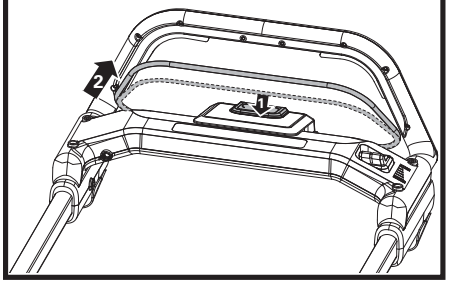


I2

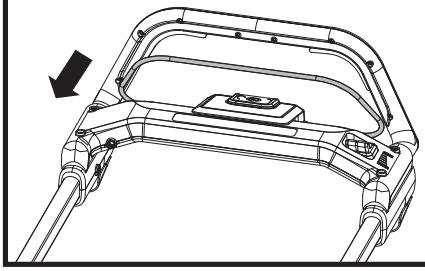

J

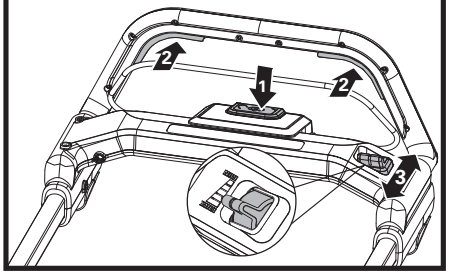

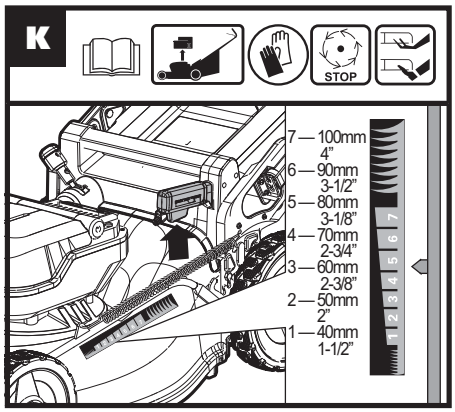
K
STOP
7 — 100mm
4”
6 — 90mm
3-1/2”
5 — 80mm
3-1/8”
4 — 70mm
2-3/4”
3 — 60mm
2-3/8”
2 — 50mm
2”
1 — 40mm
1-1/2”

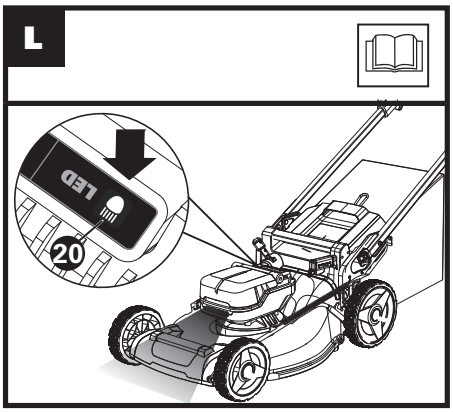
L
LED
20

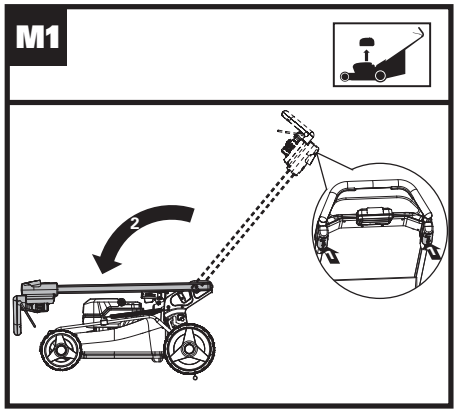
M1
2

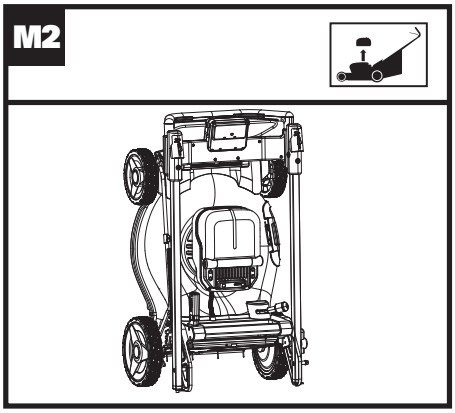
M2

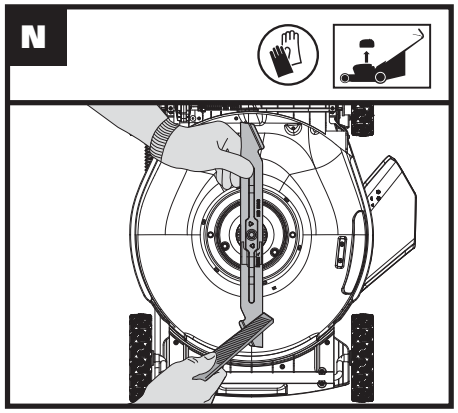
N

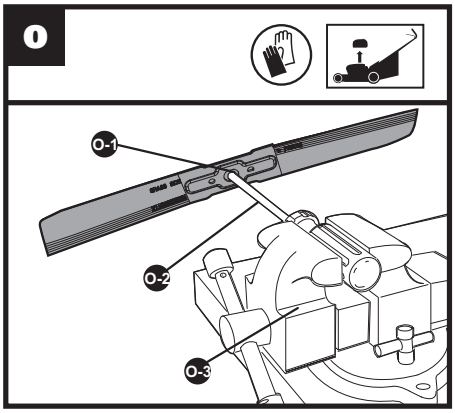
O
O-1
O-2
O-3

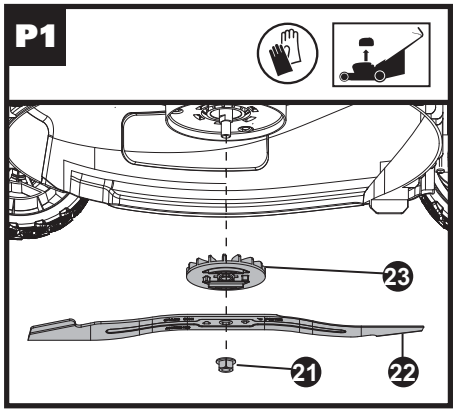
P1
23
21
22

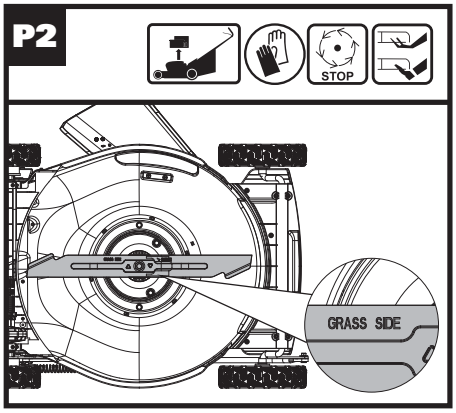
P2
STOP
GRASS SIDE

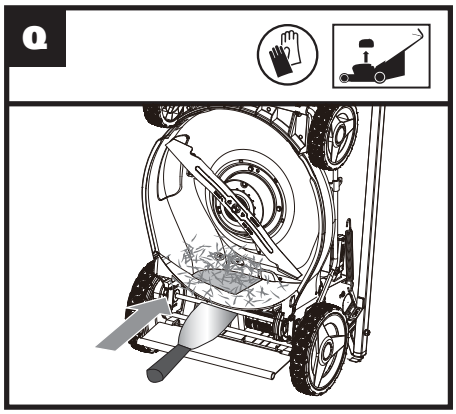
Q

# TABLE OF CONTENTS


1. SAFETY INSTRUCTIONS
2. COMPONENT LIST
3. TECHNICAL DATA
4. INTENDED USE
5. ASSEMBLY & OPERATION
6. MAINTENANCE
7. STORAGE
8. TROUBLESHOOTING


# 1. SAFETY INSTRUCTIONS

**⚠ WARNING: Some dust created by power sanding, sawing, grinding, drilling and other construction activities contains chemicals known to the state of California to cause cancer, birth defects or other reproductive harm. Some examples of these chemicals are:**

- **Lead from lead-based paints;**
- **Crystalline silica from bricks and cement and other masonry products ;**
- **Arsenic and chromium from chemically-treated lumber.**

**Your risk from these exposures varies, depending on how often you do this type of work. To reduce your exposure to these chemical: work in a well ventilated area, and work with approved safety equipment, such as those dust masks that are specially designed to filter out microscopic particles.**



**⚠ WARNING: This product can expose you to chemicals including lead and Di(2-ethylhexyl) phthalate (DEHP) which are known to the State of California to cause cancer and birth defects or other reproductive harm. For more information go to www.P65Warnings.ca.gov.**

**READ ALL INSTRUCTIONS**

**⚠ WARNING:** When using electric lawn mowers, basic safety precautions should always be followed to reduce the risk of fire, electric shock, and personal injury, including the following:

**⚠ WARNING:** Risk of injury could occur if the lawn mower is operated without the catcher assembly attached.

**⚠ WARNING:** The use of any other accessory or attachment might increase the risk of injury

**⚠ CAUTION:** For battery-operated lawn mowers, use only identical replacement batteries and specifying the battery type and manufacturer.

**FOR ALL LAWN MOWERS**

1) Avoid Dangerous Environment - Don't use lawn mowers in damp or wet locations.
2) Don't Use In Rain.
3) Keep Children Away - All visitors should be kept a safe distance from work area.
4) Dress Properly - Do not wear loose clothing or jewelry. They can be caught in moving parts. Use of rubber gloves and footwear is recommended when working outdoors.
5) Use Safety Glasses - Always use face or dust mask if operation is dusty.
6) Use Right Appliance - Do not use lawn mower for any job except that for which it is intended.
7) Don't Force Lawn Mower - It will do the job better and safer at the rate for which it was designed.
8) Don't Overreach - Keep proper footing and balance at all times.
9) Stay Alert - Watch what you are doing. Use common sense. Do not operate lawn mower when you are tired.
10) Store Idle Lawn Mower Indoors - When not in use, lawn mower should be stored in an indoor dry and locked-up place - out of reach of children.
11) Maintain Lawn Mower With Care - Keep cutting edges sharp and clean for best and safest performance. Follow instructions for lubricating and changing accessories. Keep handles dry, clean, and free from oil and grease.
12) Keep guards in place and in working order.
13) Keep blades sharp.
14) Keep hands and feet away from cutting area.
15) Objects struck by the lawn mower blade can cause severe injuries to persons. The lawn should always be carefully examined and cleared of all objects prior to each mowing.
16) If lawn mower strikes a foreign object, follow these steps:

i) Stop lawn mower. Release the switch.
ii) Remove battery pack.
iii) Inspect for damage.
iv) Repair any damage before restarting and operating the lawn mower.

17) Use identical replacement blades only.

**FOR ALL BATTERY – OPERATED GARDENING APPLIANCES**

1. Prevent unintentional starting. Ensure the switch is in the off-position before connecting to battery pack, picking up or carrying the appliance. Carrying the appliance with your finger on the switch or energizing appliance that have the switch on invites accidents.
2. Disconnect the battery pack from the appliance before making any adjustments, changing accessories, or storing appliance. Such preventive safety measures reduce the risk of starting the appliance accidentally.

3. Recharge only with the charger specified by the manufacturer. A charger that is suitable for one type of battery pack may create a risk of fire when used with another battery pack.
4. Use appliances only with specifically designated battery packs. Use of any other battery packs may create a risk of injury and fire.
5. When battery pack is not in use, keep it away from other metal objects, like paper clips, coins, keys, nails, screws or other small metal objects, that can make a connection from one terminal to another. Shorting the battery terminals together may cause burns or a fire.
6. Under abusive conditions, liquid may be ejected from the battery; avoid contact. If contact accidentally occurs, flush with water. If liquid contacts eyes, additionally seek medical help. Liquid ejected from the battery may cause irritation or burns.
7. Do not use a battery pack or appliance that is damaged or modified. Damaged or modified batteries may exhibit unpredictable behavior resulting in fire, explosion or risk of injury.
8. Do not expose a battery pack or appliance to fire or excessive temperature. Exposure to fire or temperature above 130°C( 265°F) may cause explosion.
9. Follow all charging instructions and do not charge the battery pack or appliance outside of the temperature range specified in the instructions. Charging improperly or at temperatures outside of the specified range may damage the battery and increase the risk of fire.
10. Have servicing performed by a qualified repair person using only identical replacement parts. This will ensure that the safety of the product is maintained.
11. Do not modify or attempt to repair the appliance or the battery pack (as applicable) except as indicated in the instructions for use and care.

## GENERAL SAFETY WARNINGS FOR BATTERY PACK

**WARNING: Read all safety warnings and instructions. Failure to follow the warnings and instructions may result in electric shock, fire and/or serious injury.**
**Save all warnings and instructions for future reference.**

**a) Do not dismantle, open or shred battery pack.**
**b) Do not expose battery pack to heat or fire. Avoid storage in direct sunlight.**
**c) Do not short-circuit a battery pack. Do not store battery packs haphazardly in a box or drawer where they may short-circuit each other or be short-circuited by other metal objects.** When battery pack is not in use, keep it away from other metal objects, like paper clips, coins, keys, nails, screws or other small metal objects, that can make a connection from one terminal to another. Shorting the battery terminals together may cause burns or fire.
**d) Do not subject battery pack to mechanical shock.**
**e) In the event of battery leaking, do not allow the liquid to come in contact with the skin or eyes. If contact has been made, wash the affected area with copious amounts of water and seek medical advice.**
**f) Do not use any battery pack which is not designed for use with the equipment.**
**g) Keep battery pack out of the reach of children.**
**h) Always purchase the battery pack recommended by the device manufacturer for the equipment.**
**i) Keep battery pack clean and dry.**
**j) Wipe the battery pack terminals with a clean dry cloth if they become dirty.**
**k) Battery pack needs to be charged before use. Always use the correct charger and refer to the manufacturer's instructions or equipment manual for proper charging instructions.**
**l) Do not leave battery pack on prolonged charge when not in use.**
**m) After extended periods of storage, it may be necessary to charge and discharge the battery pack several times to obtain maximum performance.**
**n) Recharge only with the charger specified by WorxNITRO. Do not use any charger other than that specifically provided for use with the equipment.** A charger that is suitable for one type of battery pack may create a risk of fire when used with another battery pack.
**o) Retain the original product literature for future reference.**
**p) Use only the battery pack in the application for which it was intended.**
**q) Remove the battery pack from the equipment when not in use.**
**r) Dispose of properly.**
**s) Do not mix cells of different manufacture, capacity, size or type within a device.**
**t) Keep the battery away from microwaves and high pressure.**

**Safety instructions for walk-behind mowers**

**IMPORTANT**
**Safe Practices for Walk-Behind Mowers**

**I. GENERAL OPERATION**
1. Read, understand, and follow all instructions

on the machine and in the manual(s) before starting.
2. Do not put hands or feet near or under the machine. Keep clear of the discharge opening at all times.
3. Only allow responsible adults, who are familiar with the instructions, to operate this machine.
4. Clear the area of objects such as rocks, wire, toys, etc., which could be thrown by the blade. Stay behind the handle when the motor is running.
5. Be sure the area is clear of bystanders before operating. Stop machine if anyone enters the area.
6. Do not operate machine barefooted or while wearing sandals. Always wear substantial footwear.
7. Do not pull machine backward unless absolutely necessary. Always look down and behind before and while moving backward.
8. Never direct discharged material toward anyone. Avoid discharging material against a wall or obstruction. Material may ricochet back toward the operator. Stop the blade when crossing gravel surfaces.
9. Do not operate machine without the entire grass catcher, discharge guard, rear guard, or other safety protective devices in place and working.
10. Never leave a running machine unattended.
11. Stop the motor and wait until the blade comes to a complete stop before cleaning the machine, removing grass catcher, or unclogging the discharge guard.
12. Operate machine only in daylight or good artificial light.
13. Do not operate machine while under the influence of alcohol or drugs.
14. Never operate mower in wet grass. Always be sure of your footing; walk; never run.
15. Disengage the drive system, if so equipped, before starting the motor.
16. If the machine should start to vibrate abnormally, stop the motor and check for the cause immediately. Vibration is generally a warning of trouble.
17. Always wear eye protection when operating machine.
18. See manufacturer's instructions for proper operation and installation of accessories. Only use accessories approved by the manufacturer.

**II. SLOPE OPERATION**

Slopes are a major factor related to slip and fall accidents, which can result in severe injury. Operation on all slopes requires extra caution. If you feel uneasy on a slope, do not mow it.

1. Mow across the face of slopes; never up and down. Exercise extreme caution when changing direction on slopes.
2. Watch for holes, ruts, bumps, rocks, or other hidden objects. Uneven terrain could cause a slip and fall accident. Tall grass can hide obstacles.
3. Do not mow on wet grass or excessively steep slopes. Poor footing could cause a slip and fall accident.
4. Do not mow near drop-offs, ditches, or embankments. You could lose your footing or balance.

**III. CHILDREN**

Tragic accidents can occur if the operator is not alert to the presence of children. Children are often attracted to the machine and the mowing activity. Never assume that children will remain where you last saw them.

1. Keep children out of the mowing area and under the watchful care of a responsible adult other than the operator.
2. Be alert and turn mower off if a child enters the area.
3. Never allow children to operate the machine.
4. Use extra care when approaching blind corners, shrubs, trees, or other objects that may block your view of a child.

**IV. SERVICE**

**GENERAL SERVICE**

1. Keep all nuts and bolts tight to be sure the equipment is in safe working condition.
2. Never tamper with safety devices. Check their proper operation regularly.
3. Keep machine free of grass, leaves, or other debris build-up.
4. If you strike a foreign object, stop and inspect the machine. Repair, if necessary, before starting.
5. Never make any adjustments or repairs with the motor running.
6. Always unplug electric mowers before adjusting, cleaning, or repairing.
7. Check grass catcher components and the discharge guard frequently and replace with manufacturer's recommended parts, when necessary.
8. Mower blades are sharp. Wrap the blade or wear gloves, and use extra caution when servicing them.
9. Maintain or replace safety and instruction labels, as necessary.

**Safe operation practices for walk-behind mowers**

**1. Safety Instructions**

**1.1 Training**

a) Read the operating and service instruction manual carefully. Be thoroughly familiar with the controls and the proper use of the

equipment.
b) Never allow children to operate a power mower.
c) Keep the area of operation clear of all persons, particularly small children, and pets.
d) Do not use a mower for any job except that for which it is intended.

**1.2 Preparation**

a) Thoroughly inspect the area where the equipment is to be used and remove all stones, sticks, wires, bones, and other foreign objects.
b) Do not operate the equipment when barefoot or wearing sandals. Always wear substantial footwear.
c) Disengage the self-propelled mechanism or drive clutch on units so equipped before starting the motor.
d) Never attempt to make a wheel height adjustment while the motor is running.
e) Mow only in daylight or in good artificial light.
f) Never operate the equipment on wet grass. Always be sure of your footing. Keep a firm hold on the handle and walk, never run.

**1.3 Operation**

a) Do not put hands or feet near or under rotating parts. Keep clear of the discharge opening at all times.
b) Stop the blade(s) when crossing gravel drives, walks, or roads.
c) After striking a foreign object, stop the motor, unplug, thoroughly inspect the mower for any damage, and repair the damage before restarting and operating the mower.
d) If the equipment should start to vibrate abnormally, stop the motor and check immediately for the cause. Vibration is generally a warning of trouble.
e) Stop the motor and unplug whenever you leave the equipment, before cleaning the mower housing, and before making any repairs or inspections.
f) Shut the motor off and wait until the blade comes to a complete stop before removing the grass catcher or before unclogging the chute.
g) Mow across the face of slopes, never up and down. Exercise extreme caution when changing direction on slopes. Do not mow excessively steep slopes.
h) Never operate the mower without proper guards, plates, or other safety protective devices in place.
i) Do not wash with a hose, avoid getting water in motor and electrical connections.

**1.4 Maintenance**

a) Check the blade and the motor mounting bolts at frequent intervals for proper tightness.
b) Keep al nuts, bolts, and screws tight to be sure the equipment is in safe working condition.
c) Check bag frequently for deterioration and wear, and replace worn bags. Check that replacement bags comply with the original manufacturer's recommendations or specifications.
d) Replace the blade if it is bent or cracked. An unbalanced blade causes vibration that could damage the motor drive unit or cause personal injury.
e) Sharpen a dull blade equally at each end to maintain the balance.
f) Clear the blade thoroughly and check its balance by supporting it horizontally on a thin nail through its centre hole. The mail should also be in a horizontal position. If either end of the blade rotates downward, remove some metal from the heavy or lower end until the blade is balanced. It is balanced when neither end drops.

**SAVE THESE INSTRUCTIONS**

## SYMBOLS

| | |
|---|---|
|   | CPSC Danger label |
|  | Severing of toes or fingers-Rotary mower blade |
|  | Thrown objects from mower deck |
|  | Keep bystanders/children away |
|  | Safety alert |
|  | Slip on slope |
|  | Read the operator's manual |
|   | Blade continues to rotate after the machine is switched off. Wait until all machine components have completely stopped before touching them |

| | |
|---|---|
|  | Wear protective gloves |
|  Li-Ion | Li-Ion battery, battery must be recycled |
|  | Remove battery from the socket before carrying out any adjustment, servicing or maintenance |
|  | Batteries may enter water cycle if disposed improperly, which can be hazardous for ecosystem. Do not dispose of waste batteries as unsorted municipal waste. |
|  | Do not burn. |
|  | To reduce the risk of injury, user must read instruction manual |
|  | Look behind while backing |





POSITEC Inc. has established a partnership with the RBRC Corporation to recycle any Positec batteries with the RBRC-call2recycle seal. For environmental protection, please do not discard batteries in the trash. After the batteries' life cycle is ended, then please call 1.800-822-8837 for a free service that will properly dispose of the battery

## 2. COMPONENT LIST

| | |
|---|---|
| 1. | SELF-PROPEL TRIGGER |
| 2. | OPERATING BAIL |
| 3. | SELF-PROPEL SPEED CONTROL |
| 4. | HANDLE BAR |
| 5. | GRASS COLLECTION BAG |
| 6. | CUTTING HEIGHT ADJUSTMENT LEVER |
| 7. | CUTTING HEIGHT ADJUSTMENT POINTER |
| 8. | BATTERY PACK COVER |
| 9. | FRONT HANDLE |
| 10. | LED HEADLIGHT |
| 11. | MULCHING-BAG SWITCH LEVER |
| 12. | REAR HANDLE |
| 13. | SAFETY FLAP |
| 14. | SAFETY BUTTON |
| 15. | HANDLE QUICK-RELEASE BUTTON |
| 16. | SIDE-DISCHARGE COVER (SEE FIG. E2) |
| 17. | SIDE-DISCHARGE CHUTE (SEE FIG. E2) |
| 18. | BATTERY PACK* (SEE FIG. F2) |
| 19. | POWER INDICATOR LIGHT (SEE FIG. H) |
| 20. | SWITCH BUTTON FOR LED HEAD-LIGHT (SEE FIG. L) |
| 21. | BLADE BOLT (SEE FIG. P1) |
| 22. | BLADE (SEE FIG.P1) |
| 23. | SPACER (SEE FIG. P1) |

*** Not all the accessories illustrated or described are included in standard delivery.**

## 3. TECHNICAL DATA

| | WP773 WP773.X ** |
|---|---|
| Voltage | 40 V ⎓ Max. (2x20 V Max.)*** |
| No load speed | 2800 /min |
| Deck diameter | 21″ |
| Cutting diameter | 20″ |
| Front wheel diameter | 8″ |
| Rear wheel diameter | 10″ |
| Cutting height | 1-1/2″-4″ |
| Cutting height positions | 7 |
| Grass collection capacity | 2 bushels |
| Battery type | Lithium-Ion |
| Machine Weight (bare tool) | 63.7 lbs |

** X may be followed by one or two characters. All models are the same except model number and trademark. The suffix in models may be number from "1" to "999" or English letter "A" to "Z" or "M1" to" M9" which means different package or the various of accessories packed in the package.

*** Voltage measured without workload. Initial battery voltage reaches maximum of 20 volts. Nominal voltage is 18 volts.

## SUGGESTED BATTERIES AND CHARGERS

| Category | Type | Capacity |
|---|---|---|
| 20V Battery | WA3012 | 4.0 Ah |
| | WA3571 | 5.0 Ah |
| 20V Charger | WA3770 | 2.0 A |
| | WA3884 | 4.0 A |

We recommend that you purchase your accessories listed in the above list from the same store that sold you the tool. Refer to the accessory packaging for further details. Store personnel can assist you and offer advice.

## 4. INTENDED USE

This product is intended for domestic lawn mowing.

## 5. ASSEMBLY & OPERATION

**NOTE:** Read instruction handbook before operation this machine.

**ASSEMBLY & OPERATION**

| ACTION | FIGURE |
|---|---|
| **ASSEMBLY** | |
| Assembling the handle bar & Adjusting Handle's height<br>**NOTE:** Press and hold Quick-release button during operation. | See Fig. A1, A2 |
| Assembling the grass collection bag | See Fig. B |
| Assembling the grass collection bag to the lawn mower<br>**NOTE:** Depress the grass collection bag slightly to ensure that it is com-pletely installed.<br>**NOTE:** Push the mulching-bag switch lever to open the mulching outlet before fitting the grass collection bag. | See Fig. C1, C2, C3 |
| Removing/emptying grass collection bag<br>**WARNING!** Always check the safety flap close the discharge outlet before using. Never lift the safety flap when the lawn mower is being used without fitted grass collection bag. | See Fig. D1, D2 |
| Assembling the side-discharge chute<br>Lift the mulching door to assemble the side-discharge chute.<br>**NOTE:** Remember to remove the grass collection bag firstly and then push the mulching-bag switch lever to close the mulching outlet before assembly. | See Fig. E1, E2 |
| Removing /fitting the battery pack<br>**NOTE:** This machine will only run when sp - batteries are installed. It is recommended to use the same AH batteries and charge the two batteries at the same time.<br>When you use two batteries with different AH, the machine will only run to the lower common denominator. | See Fig. F1,F2 |
| Checking the battery charge condition<br>**NOTE:** Fig.G1 only applies for the battery pack with battery indicator light. | See Fig. G1 |
| Charging the battery pack<br>**NOTE:** The batteries are shipped uncharged. Each battery must be fully charged before the first mow.<br>Always fully charge the two batteries at same time. More details can be found in charger's manual. | See Fig.G2 |
| **OPERATION** | |
| Power indicator light<br>See details in BATTERY STATUS part<br>**IMPORTANT:**<br>**When only one light is illuminated, your battery is overly discharged, even though the machine may still be capable to work. Continuing to operate your machine with the battery in this discharged condi-tion may reduce the life and performance of your battery. When no light is illuminated, at least one battery is not fully installed or battery may be defective, please double check the batteries are fully seated into position**. | See Fig. H |

| | |
|---|---|
| Starting and Stopping<br>**NOTE: Make sure the Mulch-Bag lever is in the bag position after mowing. (See Fig. C1)**<br>**For starting, press both the Safety button and the Operating bail at the same time.** | See Fig. I1, I2 |
| Operating the self-propel system.<br>**NOTE: To activate self-propel, press both the Safety button and the Self-propel speed-control button at the same time.** | See Fig. J |
| Adjusting the cutting height<br>⚠ **WARNING!** Stop, release Operating Bail and wait until the motor stops before adjusting height. The blades continue to rotate after the machine is switched off, a rotating blade can cause injury. Do not touch rotating blades. | See Fig. K |
| LED headlight | See Fig. L |
| Storage | See Fig. M1, M2 |

**BATTERY STATUS (See Fig. H)**

• Before starting or after use, press the button beside the power indicator light on the machine to check the battery capacity.

• During operation, the battery capacity will be indicated automatically by the battery power indicator. The indicator constantly senses and displays the battery condition as follows.

• Charge the machine with 2 battery packs with different AH, the power indicator light displays the battery condition with the lower one of the two batteries.

| Battery power indicator status | Battery condition |
|---|---|
| Five green lights (■■■■■) are illuminated. | The two batteries are in a highly charged condition. |
| Two, three or four green lights are illuminated. | The two batteries have a remaining charge. The more lights are illuminated, the more battery capacity. |
| Only one green light (■□□□□) is illuminated. | The battery level of at least one battery pack is very low. Please check and charge the battery pack. |
| No light is illuminated. | At least one battery is not fully installed or battery may be defective. |
| Only one light is flashing twice per cycle. | At least one battery is over discharged (please refer to the battery charge condition), please recharge the two batteries at once before use again or storage. |
| Only one light is flashing three times per cycle. | At least one battery is hot, wait for them cool down before start again. |
| Only one light is flashing four times per cycle. | The machine is over load. Raise the cutting height or push slowly. |

## MULCHING MOWING TIPS

When using the mulching plug, your new mower is designed to cut the grass clippings into small pieces and distribute them back into the lawn, using mulching fins located inside the mower deck.

Under normal conditions, the mulched grass will biodegrade quickly to provide nutrients to the lawn. Please review the following recommendations for optimum mulching performance,

1) Avoid mowing when the grass is wet from rain or dew. Wet grass may form clumps which interfere with the mulching action and reduce runtime. The best time to mow grass is in the late afternoon when the grass is dry and the newly cut area will not be exposed to direct sunlight.
2) For best mulching performance, set the cutting height to remove about one third of the grass blade length, ideally no more than 1.5” at one time. If the lawn is overgrown, it may be necessary to increase the cut height to reduce the pushing effort and prevent overloading the motor. For extremely heavy mulching, it is advisable to first cut at a high cut height setting, and then re-cut to the final cut height. Otherwise, make narrower cuts and mow slowly.
3) For best performance, keep the mower housing free of built-up grass. From time to time turn mower off, remove batteries and wait for the blade to come to a complete stop. Turn mower on its side. Using an object such as a stick, wipe out any accumulation of grass in the blade area. Be careful of the sharp edges of the blade. Clean often in wet, new grass, and always after every use.
4) Certain types of grass or grass conditions may require that an area be mulched a second time to fully disperse the grass throughout the lawn. If cutting a second time, it is advisable to cut perpendicular (across) the first cut pattern. DO NOT CHANGE CUT PATTERN IN ANY WAY THAT WOULD CAUSE MOWING DOWN A HILL.
5) Change your cutting pattern from week to week. This will help prevent matting and graining of the lawn.

**CUTTING AREA**
The cutting area can be affected by many factors including: cutting height, operation practices (ex: starting/stopping), lawn moisture levels, grass length and thickness.

It is ideal for mowing ¼ acre to 1/2 acre lot sizes.
**TIPS:**
1) Mowing the lawn frequently and reducing the amount of starting/stopping procedures will help conserve battery runtime. It is recommended to always use the same two batteries during operation with fully charged levels.
2) For the best cutting performance, it is recommended to only mow up to 1/3 or less of the current grass height at a time. Mow at a slower pace when cutting long/ thick grass to allow the mower to properly discharge the clippings.

# 6. MAINTENANCE

**WARNING: Stop the mower and remove batteriesbefore removing the grass collection bag.**
**NOTE:** To ensure long and reliable service, perform the following maintenance procedures regularly. Check for obvious defects such as a loose, dislodged or a damaged blade, loose fittings, and worn or damaged components. Check that the covers and guards are all undamaged and are correctly attached to mower. Carry out any necessary maintenance or repairs before operating mower. If the mower should happen to fail despite regular maintenance, please call our customer helpline for advice.

**BLADE SHARPENING**
KEEP BLADE SHARP FOR BEST MOWER PERFORMANCE. A DULL BLADE DOES NOT CUT GRASS CLEANLY OR MULCH PROPERLY.
WEAR PROPER EYE PROTECTION WHILE REMOVING, SHARPENING, AND INSTALLING BLADE.
ENSURE THE BATTERIES ARE REMOVED.
Sharpening the blade twice during a mowing season is usually sufficient under normal circumstances. Sand causes the blade to dull quickly. If your lawn has sandy soil, more frequent sharpening may be required.
REPLACE BENT OR DAMAGED BLADE IMMEDIATELY.

**WHEN SHARPENING THE BLADE (See Fig. N)**
1. Make sure blade remains balanced.
2. Sharpen blade at the original cutting angle.
3. Sharpen cutting edges on both ends of blade to keep it balanced, removing equal amounts of material from both ends.

**NOTE:**
1. Be sure the mower is turned off and remove batteries
2. Place the mower in stand up storage mode.

**BLADE BALANCING (See Fig. O)**
Check balance of blade by placing center hole in blade O-1 over a screwdriver shank O-2, clamped horizontally in a vise O-3. If either end of the blade rotates downward, file that end. Blade is properly balanced when neither end drops.

**BLADE MAINTENANCE (See Fig. P1, P2)**
Replace your Mower Blade after 50 hours mowing or 2 years, which ever is the sooner-regardless of condition.
Follow these procedures to remove and replace the Blade. You will need garden gloves (not provided) and a spanner wrench (not provided) to remove the Blade. Make sure batteries are not installed. Wedge a block of wood between the blade and the mower deck to prevent the blade from turningand unscrew the Blade Bolt counter-clockwise using a spanner wrench, and then remove the Blade.
To re-assemble, position the Blade with the cutting edges towards the ground. Then securely tighten the Blade Bolt.

# 7. STORAGE (SEE FIG. M1,M2)

Stop the mower and remove batteries. Clean the exterior of the machine thoroughly using a soft brush and cloth. Do not use water, solvents or polishes. Remove all grass and debris, especially from the ventilation slots.
Turn the machine on its side and clean the blade area. If grass cuttings are compacted in the blade area, remove with a wooden or plastic implement.
Store the machine in a dry place. Do not place other objects on top of the machine.
To aid storage, Press and hold Quick-release button, and fold the Handle bar.

**FOR BATTERY TOOLS**
The ambient temperature range for the use and storage of tool and battery is 0°C-45°C (32°F-113°F).
The recommended ambient temperature range for the charging system during charging is 0°C-40°C (32°F-104°F).

# 8. TROUBLE SHOOTING

| Problem | Solution |
|---|---|

| | |
|---|---|
| 1. Mower doesn't run when Operating Bail is activated. | A. Release Operating Bail to turn mower off. Remove batteries. Turn mower over and check that blade is free to turn. If not free, return to an authorized servicer. Blade should turn freely.<br>B. Has battery been fully charged? Plug in charger and wait for green light to come on.<br>C. For starting, press both the Safety lock-out button and the Operating bail at the same time. (See Fig. I1) |
| 2. Mower doesn't run when Self-propel Speed-Control Lever is activated. | A. To activate self-propel, press both the Safety lock-out button and the Self-propel speed-control button at the same time. (See Fig. J) |
| 3. Motor stops while mowing. | A. Release Operating Bail to turn mower off. Remove batteries. Turn mower over and check that blade is free to turn. If not free, return to an authorized servicer. Blade should turn freely.<br>B. Raise cutting height of wheels to highest position and start mower.<br>C. Has battery been fully charged? Plug in charger and wait for green light to come on.<br>D. Avoid overloading the mower. Slow down the cutting pace by pushing mower slower or raise the cut height. Or both. |
| 4. Mower runs but cutting performance is unsatisfactory, or does not cut entire lawn. | A. Has battery been fully charged? Plug in charger and wait for green light to come on."<br>B. Release Operating Bail to turn mower off. Remove batteries.Turn mower over and check: Blade for sharpness - Keep blade sharp. Deck and discharge chute for clogging.<br>C. Wheel height adjustment may be set too low for grass condition. Raise cutting height |
| 5. Mower is too hard to push. | A. Raise cutting height to reduce deck drag on grass. Check each wheel for free rotation. |
| 6. Mower is abnormally noisy and vibrates. | A. Release Operating Bail to turn mower off. Remove batteries. Turn mower on side and check blade to ensure it has not been bent or damaged. If blade is damaged, replace with a replacement blade. If the underside of the deck is damaged return mower to an Authorized service center.<br>B. If there is no visible damage to the blade and the mower still vibrates: Release Operating Bail to turn mower off, Remove batteries and remove blade. Rotate blade 180 degrees and retighten. If mower still vibrates, return the mower to an authorized service center. |
| 7. Battery charger LED's not on. | A. Check plug connection.<br>B. Replace charger. |
| 8. Battery charger LED does not flip to green. | A. Battery needs to be diagnosed. Take to authorized service center. |
| 9. Mower not picking up clippings with the Grass Collection Bag. | A. Remove mulch plate when bagging.<br>B. Chute clogged. Release Operating Bail to turn mower off. Remove batteries. Clear chute of grass clippings.<br>C. Too much cut grass. Raise cutting height of wheels to shorten length of the cut.<br>D. Bag full. Empty bag more often. |
| 10. When mulching there are clippings visible. | A. Too much cut grass. Raise cutting height of wheels to shorten length of the cut. Do not cut off more than 1/3 of total length.<br>B. Check blade for sharpness. Always keep blade sharp. |
| 11. Low or diminished run-time after many uses | A. Return to Authorized Service location - may need new battery. |
| 12. The battery charger LED flashes red and the battery can't be charged. | A. The battery overheats after continuous use. Remove battery from the charger and allow it to cool to 42°C or less. |

| | |
|---|---|
| 13. If the Mulching-Bag Lever will not move. | A. Remove battery packs.<br>B. Turn mower on side.<br>C. Clean grass off of the mulching plate. (See Fig. Q) |

# TABLE DES MATIÈRES


1. INSTRUCTIONS DE SÉCURITÉ
2. LISTE DES ÉLÉMENTS
3. DONNÉES TECHNIQUES
4. UTILISATION PRÉVUE
5. INSTRUCTIONS D'UTILISATION
6. ENTRETIEN
7. RANGEMENT
8. GUIDE DE DÉPANNAGE


# 1. INSTRUCTIONS DE SÉCURITÉ

⚠ **AVERTISSEMENT! Certaines des poussières produites en utilisant des outils électriques sont considérées par l'État de Californie comme susceptibles de provoquer le cancer, des anomalies congénitales et d'autres problèmes de reproduction. Voici des exemples de ces produits chimiques:**

- **Plomb issu de peinture à base de plomb;**
- **Silice crystalline issue de briques et du ciment et autres produits de maçonnerie;**
- **Arsenic et chrome issus de bois traité chimiquement.**

**Votre risque de ces expositions varie en fonction de la fréquence à laquelle vous effectuez ce travail. Pour réduire votre exposition à ces produits chimiques : travaillez dans une zone bien ventilée; portez un équipement de sécurité approuvé, tel que des masques antipoussières spécialement conçus pour éliminer les particules microscopiques par filtrage.**



⚠ **AVERTISSEMENT: Ce dispositif peut vous exposer aux produits chimiques notamment le plomb et le di-phtalate (de 2-éthylhexyle) (DEHP) qui sont reconnus dans l'État de Californie comme causant des cancers et des anomalies congénitales ou d'autres anomalies de la reproduction. Pour en savoir plus, veuillez consulter le site www.P65Warnings.ca.gov.**

**LISEZ ET LISEZ ET ASSIMILEZ TOUTES LES INSTRUCTIONS**

⚠ **AVERTISSEMENT!** Lors de l'utilisation d'appareils électriques de jardinage, des précautions de base doivent être observées afin de réduire les risques de feu, choc électrique, et blessure grave, incluant ce qui suit :

⚠ **AVERTISSEMENT!** L'emploi de la tondeuse sans sac de ramassage peut provoquer des risques de blessure.

⚠ **AVERTISSEMENT!** L'emploi de tout autre accessoire ou dispositif est susceptible