AstroAI

EN



USER MANUAL

PORTABLE LITHIUM BICYCLE PUMP

AIRUN L8Max

CATALOG

INTRODUCTION ---------- 03

PRECAUTIONS ---------- 04

DIAGRAM ---------- 05

PREPARATION ---------- 07

START TO USE ---------- 09

PRODUCT MAINTENANCE ---------- 14

TROUBLESHOOTING/FAQ ---------- 14

PRODUCT SPECIFICATIONS ---------- 16

PACKAGE CONTENTS ---------- 16

RECYCLING INSTRUCTIONS ---------- 17

WARRANTY PERIOD ---------- 17

FCC STATEMENT ---------- 17

INTRODUCTION

Thank you for purchasing the AstroAI Portable Lithium Bicycle Pump.

This product is easy to operate with a clear screen that can display both the preset value and the real-time value. It is compact and easy to carry, suitable for a variety of bicycle tires, from high-pressure road bike tires to larger, thicker mountain bike tires.

We hope you enjoy your new Portable Lithium Bicycle Pump!



Before using this product, please fully read and understand this manual; keep it for future reference.

PRECAUTIONS

- Please read the user manual carefully before use.
- Please check the preset pressure value before use. The preset pressure value should always match the object being inflated.
- Do not place the product near flammable and explosive materials.
- Do not store the product in a humid or dusty environment.
- Do not place the product in a place where it can easily fall.
- Do not allow children to use the product.
- Do not throw the product into fire. Dispose of it in accordance with the relevant local regulations.
- Prolonged continuous use may cause the device to overheat and sustain damage. After 12 minutes of continuous operation, allow the unit to cool down for at least 15 minutes.
- Do not use harsh chemicals to clean this device. Use only mild soap and a cloth moistened with hot water to clean its plastic parts.
- If any accessories are missing or damaged upon receipt, please contact AstroAI customer support.

DIAGRAM

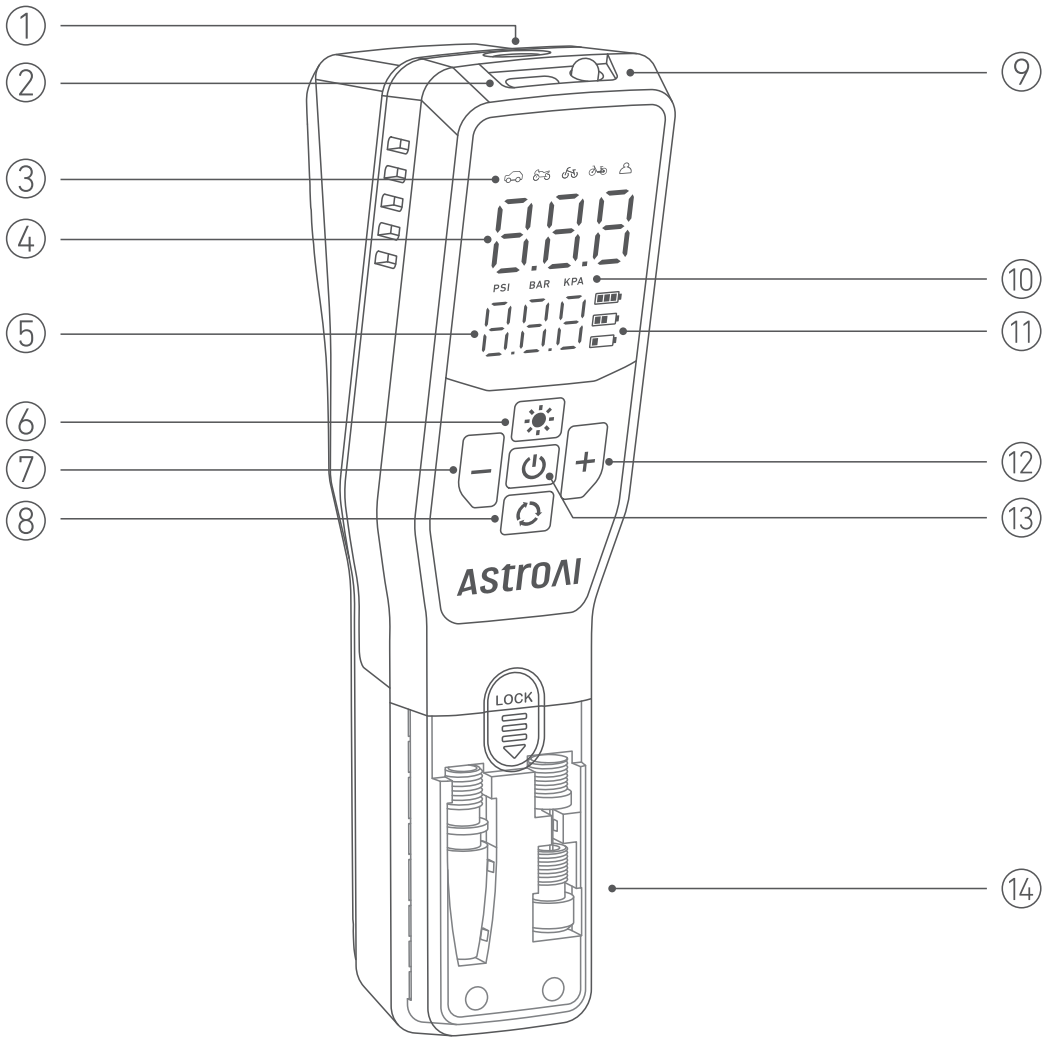

① Quick Connector Interface

② Type-C Charging Port

③ Inflation Mode

④ Real-Time Pressure Value Display

⑤ Preset Pressure Value Display

⑥ LED Light Button

⑦ Pressure Adjustment Button “-”

⑧ Settings Button

⑨ LED Light

⑩ Pressure Unit

⑪ Battery Level Display

⑫ Pressure Adjustment Button “+”

⑬ Power Button

⑭ Accessory Storage Compartment

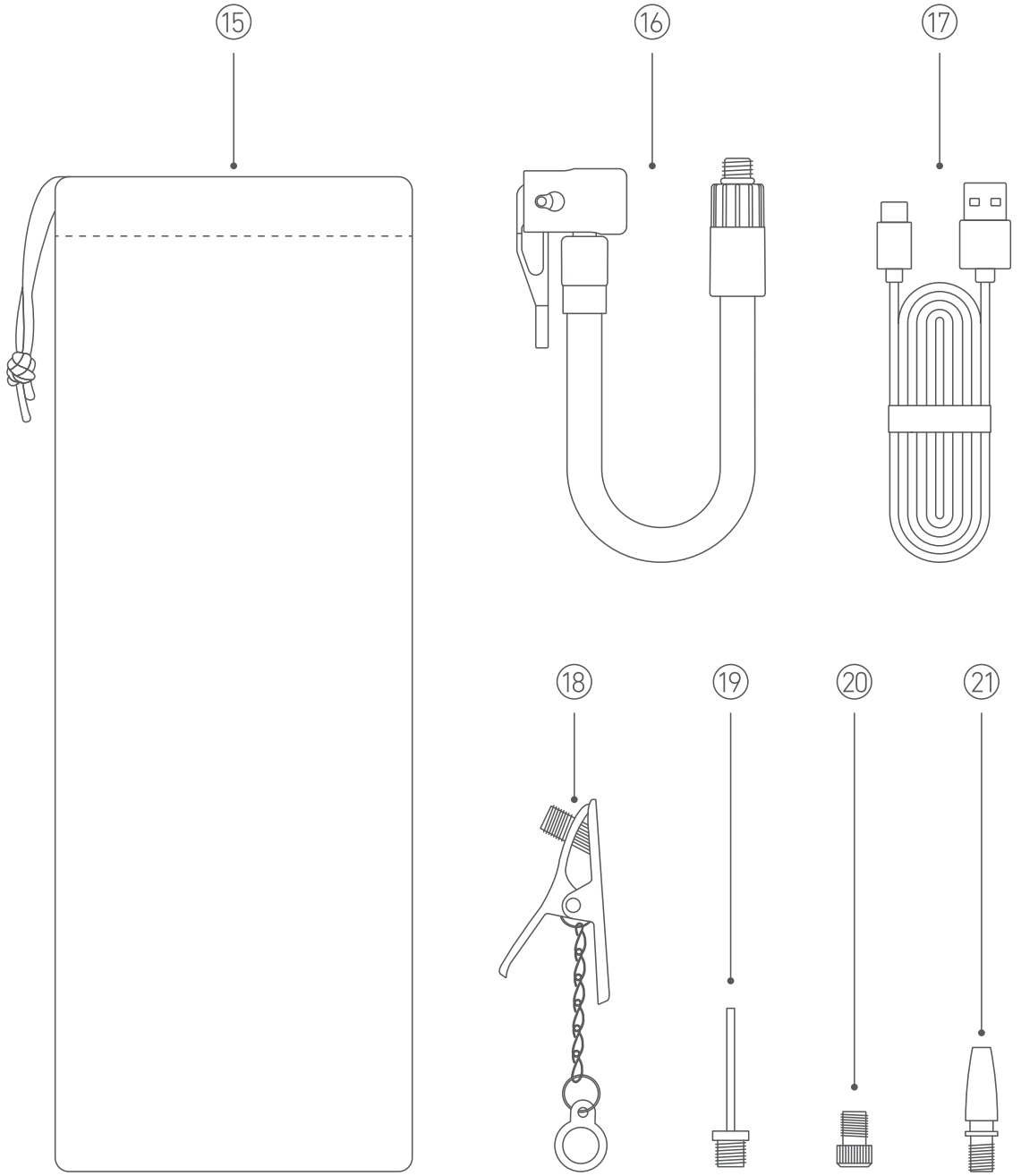

⑮ Storage Bag

⑯ Quick Connector

⑰ USB Charging Cable

⑱ Dunlop-to-Schrader Valve

⑲ Needle Valve Adapter

⑳ Presta-to-Schrader Valve

㉑ Air Nozzle Cone

PREPARATION

Charging

- Please use the included USB charging cable to charge the product.
- When the product is connected to the power supply, the battery icon will flash. Once the battery is fully charged, the battery icon will remain illuminated.

Note:

- The product cannot be used while charging.
- The necessary power adapter must be purchased separately.
- Please cool the product before charging.
  Recommended charging temperature: 32°F~104°F (0°C-40°C).

Usage of Accessories

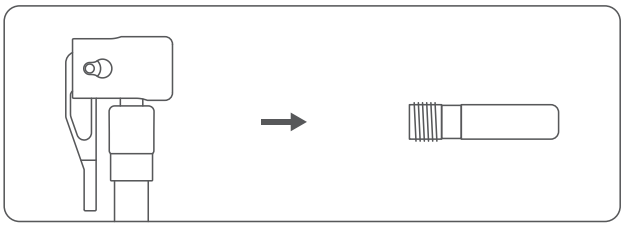

Quick Connector:
Fits Schrader Valve stems.

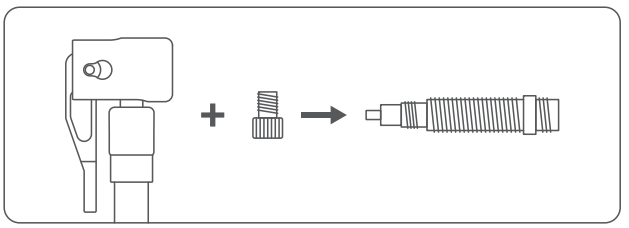

Presta-to-Schrader Valve:
Fits Presta Valve stems.

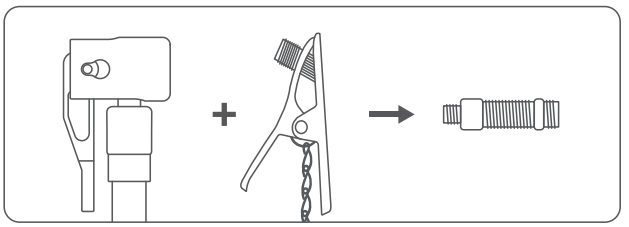

Dunlop-to-Schrader Valve:
Fits Dunlop Valve stems.

How to Use Presta-to-Schrader Valve:

① Unscrew the bicycle's Presta Valve Stem.

② Screw on the included Presta Valve to the valve stem.

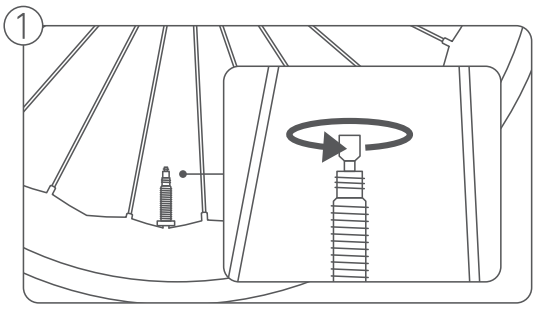

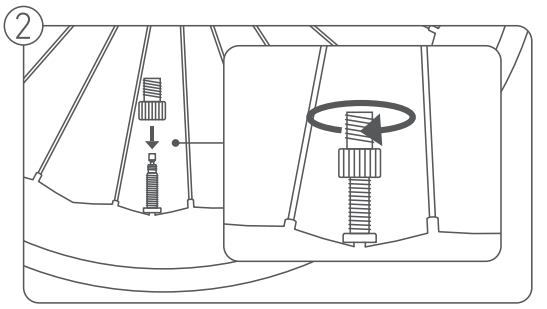

③ Connect the quick connector to the Presta Valve.

④ Inflate the tire to the desired pressure value. Then, remove the Presta Valve and screw the valve cap back on.

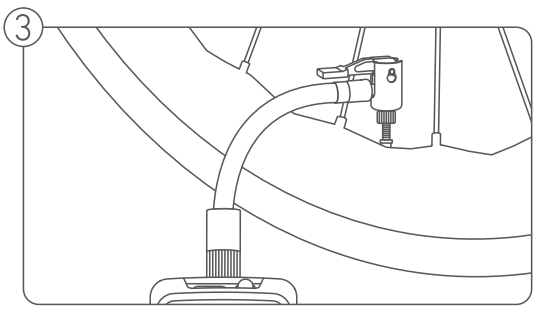

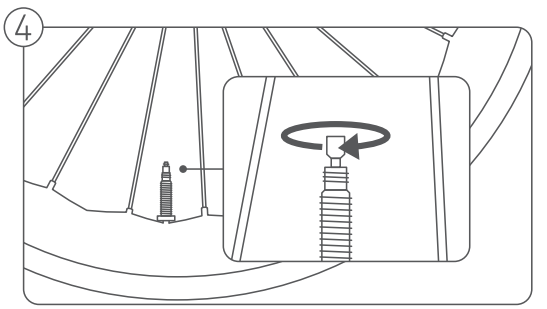

How to Use Dunlop-to-Schrader Valve:

① Unscrew bicycle's Dunlop Valve stem cap.

② Properly connect the included Dunlop Valve adapter to the bicycle's valve stem.

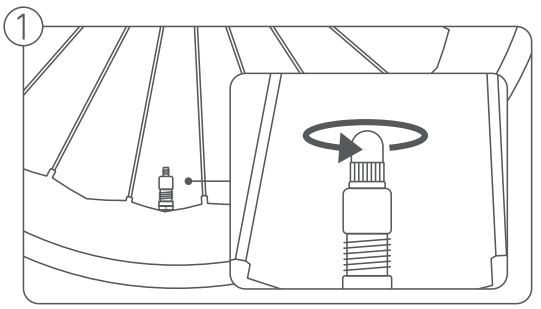

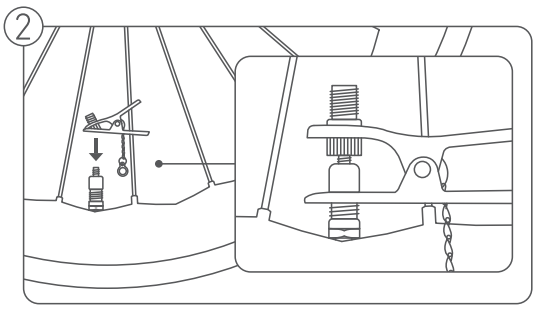

③ Connect the quick connector to the Dunlop Valve.

④ Inflate the tire to the desired pressure value. Then, remove the Dunlop Valve adapter and screw on the valve cap back on.

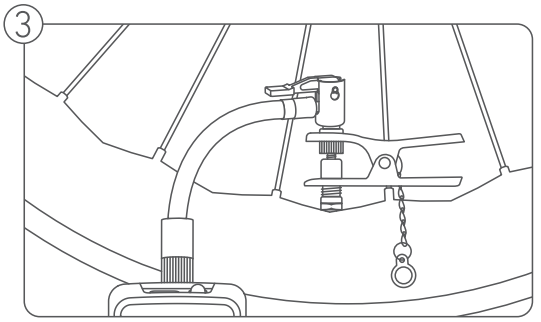

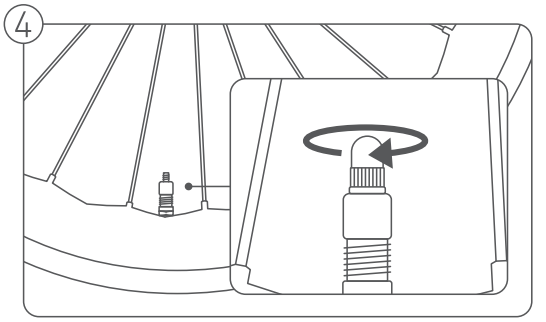

START TO USE

I. Power On/Off

Press and hold the Power Button for 1.5 seconds to power on the pump;
Press and hold the Power Button for 1.5 seconds to power off the pump.
The product will automatically shut down after 90 seconds of inactivity.

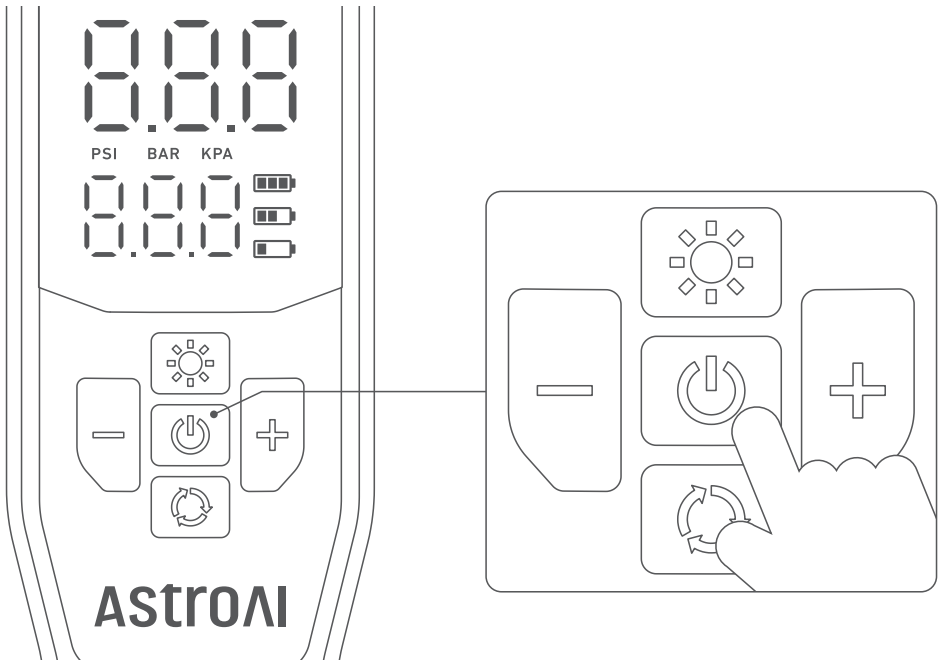

II. Switching Inflation Modes

Press the Settings Button to switch between the five preset modes: Car, Motorcycle, Road Bike, Electric Bike, and Custom Mode.

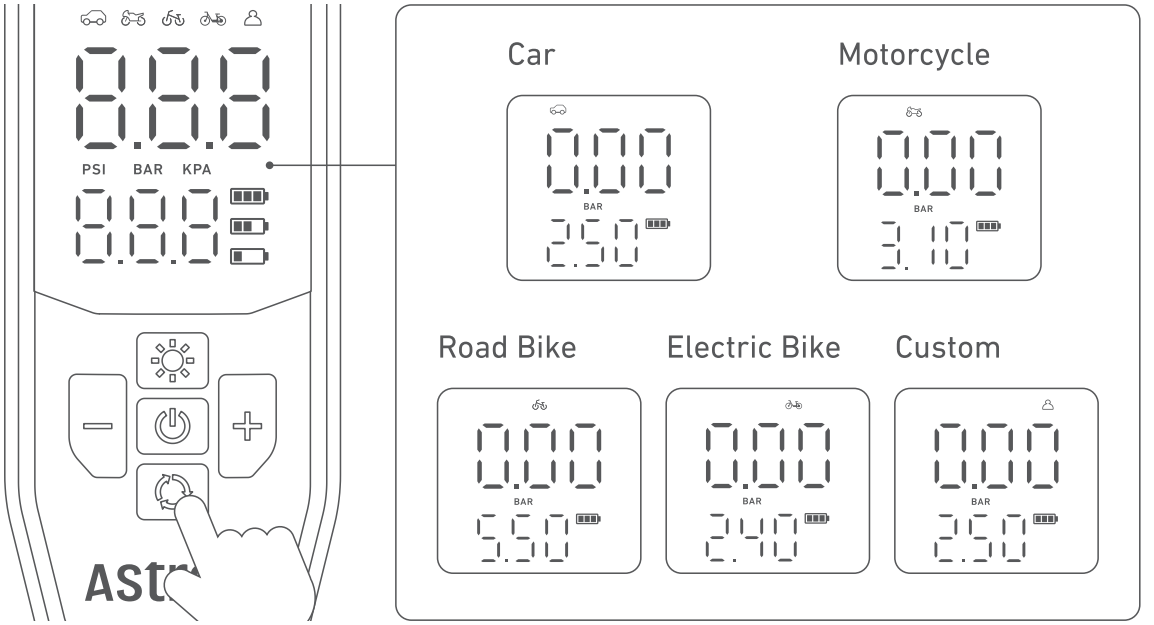

III. Switching Units

Press and hold the Settings Button to switch between 3 units: PSI, BAR, KPA.

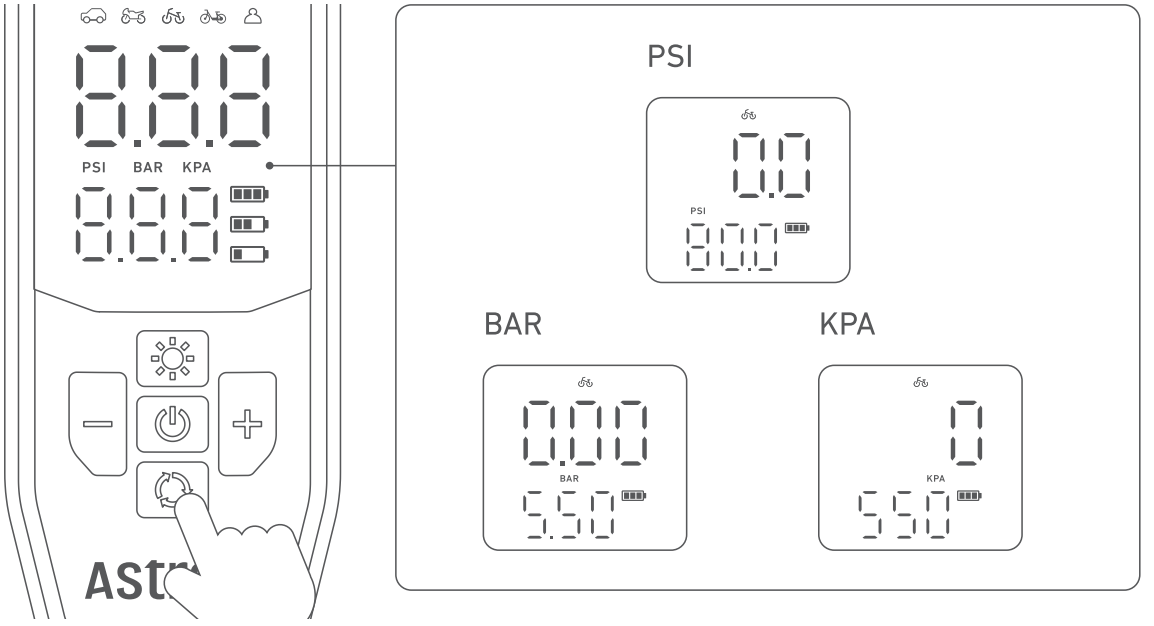

IV. Preset Pressure Values

Use the "+" and "-" buttons to set the pressure value, or press and hold to quickly set the pressure value.

Button “-”

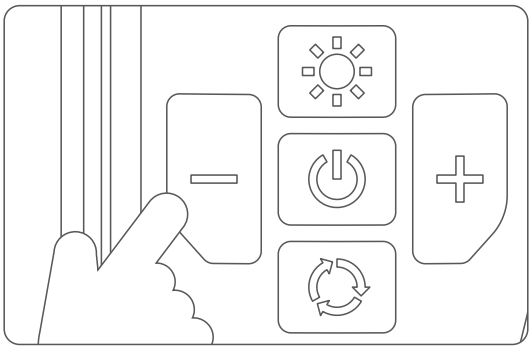

Button “+”

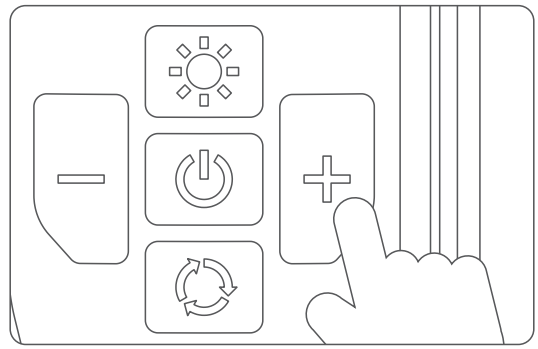

V. Turning the LED Flashlight On/Off

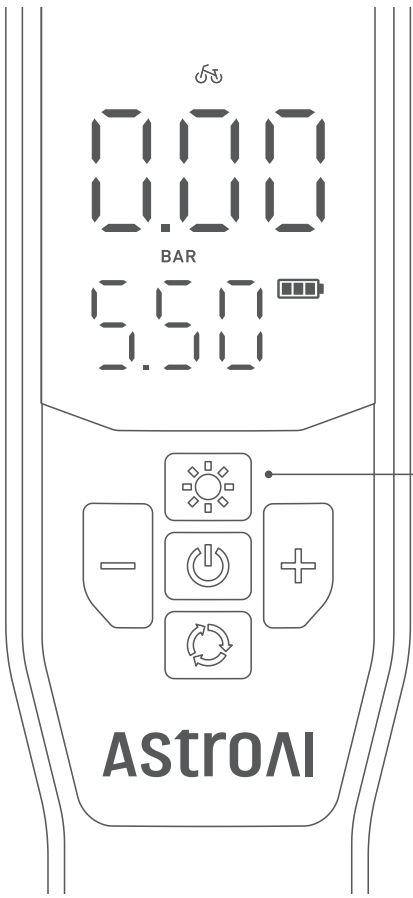

If the device is off, press and hold the Light Button for 1.5 seconds to activate the flashlight function.

If the device is already on, tap the LED Light Button once to turn on the flashlight function.

Once the flashlight is on, press the button a second time to activate the slow flashing function.

Press the LED Light Button a third time to activate the fast flashing function.

Press the LED Light Button again to turn off the light.

VI. Tire Connection

- Firmly screw the quick connector into the quick connector interface on the main unit.

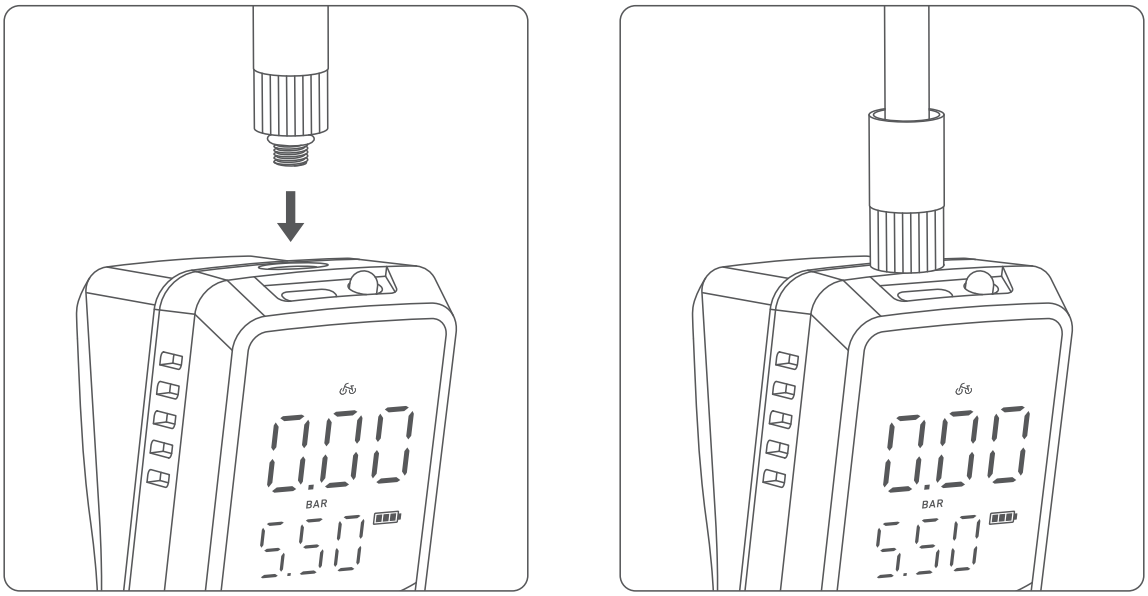

- Match the appropriate connecting accessories to the tire valve type and attach them to the valve stem.

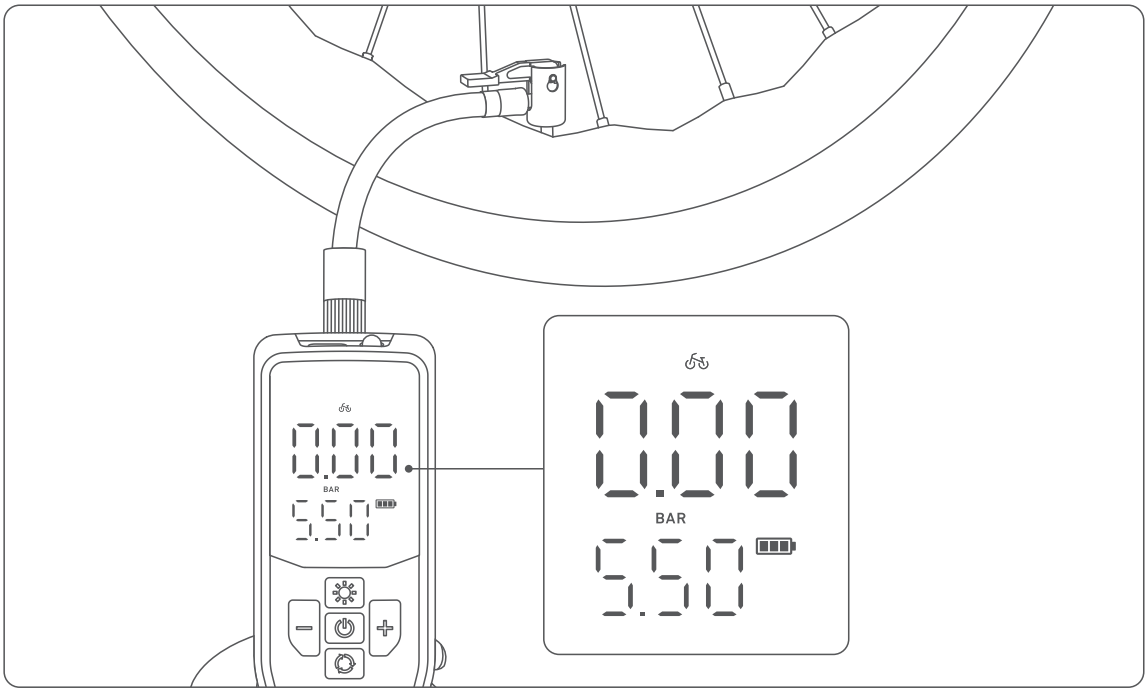

VII. Measuring Pressure

When the device is powered on and connected to the tire to be inflated, the screen will display the current tire pressure value.

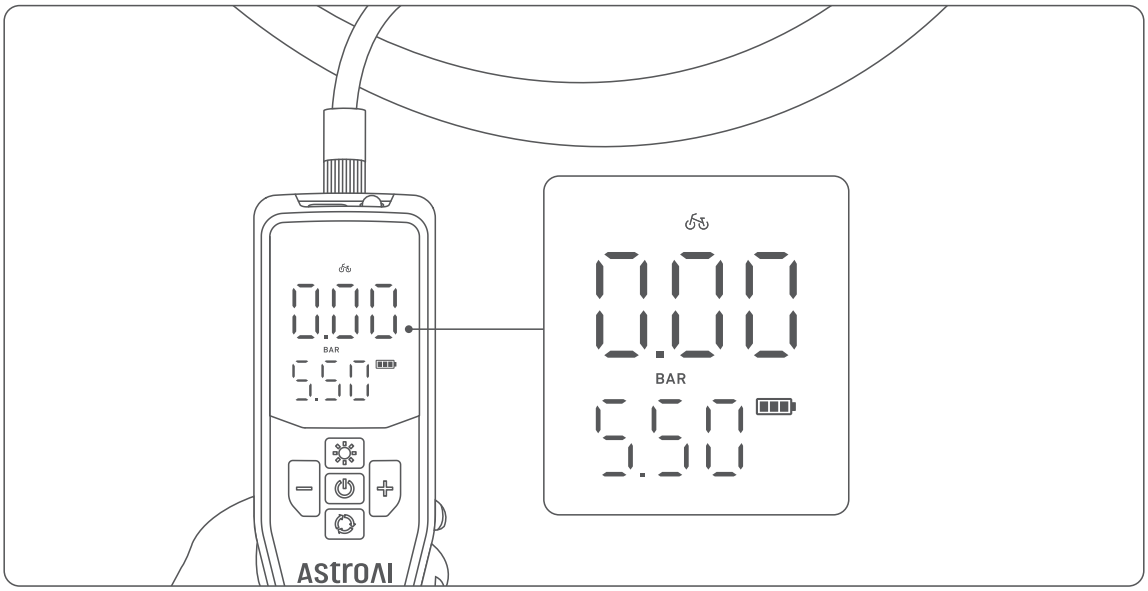

VIII. Start Inflation

The device will begin to inflate when the Power Button is pressed. The screen will show the real-time tire pressure value (do not touch the hose during inflation).

IX. Stop Inflation

Once the preset pressure value is reached, the air pump will stop automatically. You can also press the Power Button once to stop inflating.

X. Complete Inflation

- When inflation is complete, remove the quick connector from the valve stem and screw the valve cap back onto the valve stem.
- Properly store the product for next use.

PRODUCT MAINTENANCE

- Store the product in a cool, dry place. Avoid direct exposure to sunlight.
- Please fully charge the product before long-term storage; charge it every 3 months to extend the battery life.
- Clean plastic parts using mild soap and a cloth dipped in warm water.

TROUBLESHOOTING/FAQ

- If the bicycle pump does not start, please check its battery level. Lithium batteries may discharge when idle.
- If the bicycle pump inflates slowly, check that the quick connector is properly connected to the valve stem of the tire.
- The bicycle pump will generate heat during use. The product may become hot after prolonged use. Please wait for it to cool down before using again.
- Low-temperature environments may affect the capacity and lifespan of the lithium battery;this is a normal occurrence with all lithium battery products.

Code Display

E1 **Issue:** If the connected tire pressure exceeds 150PSI, the product will not function, and the screen will display “E1”.

Solution: If E1 is displayed continuously for 10 seconds, the device will shut down and cannot be used during this period. If the detected pressure reads below 150PSI within 10 seconds, the screen will resume showing the real-time pressure.

E2 Issue: If the instantaneous starting current exceeds the preset value, this protection will be triggered, and the code “E2” will be displayed.

Solution: If E2 is displayed continuously for 10 seconds, the device will shut down and cannot be used during this period. Restarting will restore normal operation.

E3 Issue: If the air pump stops inflating due to an excessively high battery temperature during operation, the motor power will be cut off and the screen will display “E3”.

Solution: If “E3” is displayed continuously for 10 seconds, the device will shut down and cannot be used during this period. After the temperature drops to room level, the product can be powered on and used normally.

E4 Issue: If the cell temperature is too high when a charger is detected, charging will be temporarily disabled and the screen will display “E4”.

Solution: Place the device in a room-temperature environment. Once the temperature returns to normal, charging can resume.

E5 Issue: If the cell temperature is too low when a charger is detected, charging will be prohibited and the screen will display “E5”.

Solution: Place the device in a room-temperature environment. Once the temperature returns to normal, charging can resume.

PRODUCT SPECIFICATIONS

Model	AIRUN L8Max
Flow Rate	15L/Min
Maximum Power	80W
Maximum Pressure Value	150PSI
Battery Capacity	7.4V 1800mAh
Type-C Input	5V ⎓ 2A
Display Units	PSI, BAR, KPA
Length of Inflation Hose	0.72ft (22cm)
Length of USB Charging Cable	1.64ft (50cm)
Product Dimensions	4.8 × 9.8 × 20.1cm 1.88 × 3.85 × 7.91in

PACKAGE CONTENTS

AstroAI Air Pump	× 1	Needle Valve Adapter	× 1
Quick Connector	× 1	Presta-to-Schrader Valve	× 1
Air Nozzle Cone	× 1	Dunlop-to-Schrader Valve	× 1
Storage Bag	× 1	USB Charging Cable	× 1
User Manual	× 1		

RECYCLING INSTRUCTIONS

If you plan to dispose of this product, remember it is made of many valuable materials, some of which can be recycled. Please follow local regulations for recycling relevant materials.

WARRANTY PERIOD

This product is covered with a 2-year warranty by AstroAI.

Each AstroAI Portable Lithium Bicycle Pump is free from defects in materials and workmanship. This warranty does not cover damage due to negligence, misuse, contamination, alteration, accident, or abnormal operation or handling conditions. This warranty is applicable only to the original purchaser and is not transferable.

AstroAI is committed to providing our customers with excellent products and customer service. If you have any questions or concerns, please feel free to reach out to us via support@astroai.com; we're happy to assist you!

FCC STATEMENT

“This device complies with part 15 of the FCC Rules. Operation is subject to the following two conditions: (1) This device may not cause harmful interference, and (2)this device must accept any interference received, including interference that may cause undesired operation.”

Web: www.astroai.com
E-Mail: support@astroai.com

AstroAI

V3.0.0