Form No. 3478-117 Rev A

Crumber Kit
Compact Tool Carrier
Model No. 22464

Installation Instructions

⚠ WARNING

CALIFORNIA
Proposition 65 Warning

Use of this product may cause exposure to chemicals known to the State of California to cause cancer, birth defects, or other reproductive harm.

Safety

Safety and Instructional Decals

Safety decals and instructions are easily visible to the operator and are located near any area of potential danger. Replace any decal that is damaged or missing.

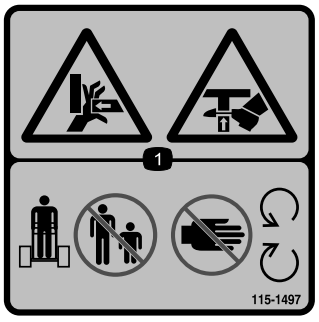

decal115-1497

115-1497

1. Crushing hazard of hand; crushing hazard of foot—keep bystanders away from the machine; keep away from moving parts.



decal133-8061

133-8061

Installation

⚠ WARNING

Contact with moving parts can result in personal injury.

- **Keep your fingers, hands, and clothing away from moving parts.**
- **Never attempt to manipulate the attachment while the engine is running.**

Installing the Crumber

1. Park the machine on a level surface, engage the parking brake (if equipped), and lower the loader arms.
2. Shut off the engine and remove the key.
3. If a safety-bar extension is installed on the rail assembly, remove it.

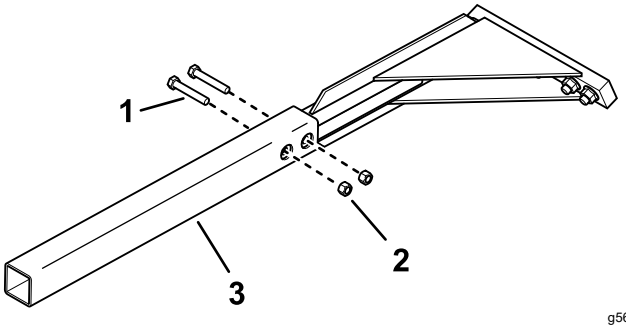

g569916

Figure 1

Safety-bar extension for 91 cm (3 ft) boom shown.

1. Bolt—1/2 x 3 inches (2)
2. Nut—1/2 inch (2)
3. Safety-bar extension

© 2025—The Toro® Company
8111 Lyndale Avenue South
Bloomington, MN 55420

Register at www.Toro.com.

Original Instructions (EN)
Printed in the USA
All Rights Reserved

3478-117

4. Install the crumber-extension bar (supplied with the boom) over the end of the safety-rail assembly and secure it using the 2 bolts and locknuts.

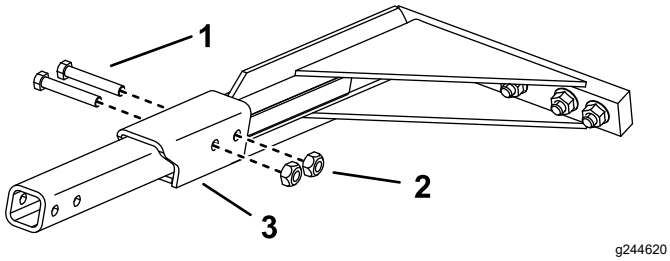

Figure 2

Crumber-extension bar for 91 cm (3 ft) boom shown.

1. Bolt—1/2 x 3 inches (2)
2. Nut—1/2 inch (2)
3. Crumber-extension bar

5. Install the crumber-mounting bracket over the end of the crumber-extension bar, and secure it using 2 bolts and 2 nuts.

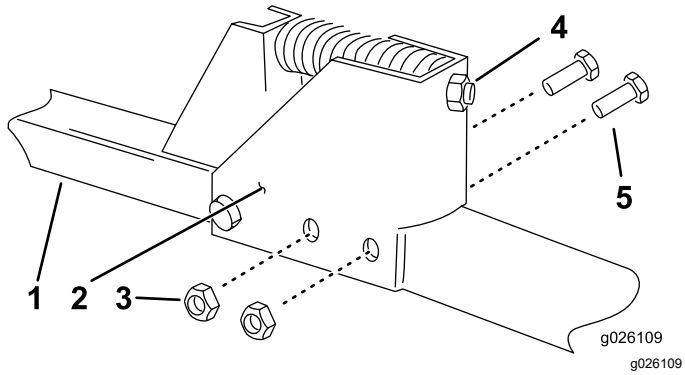

Figure 3

1. Crumber
2. Crumber-mounting bracket
3. Nut (2)
4. Adjusting nut
5. Bolt (2)

Operation

Adjusting the Crumber

Adjust the crumber so that the crumber blade is within 3.8 to 6.35 cm (1-1/2 to 2-1/2 inches) from the trencher teeth. To adjust the crumber, loosen or tighten the adjustment nut as needed (Figure 3).

Transporting the Crumber

Before transporting the trencher with the crumber attached, complete the following procedure:

1. Park the machine on a level surface, engage the parking brake (if equipped), and lower the loader arms.
2. Shut off the engine and remove the key.
3. Remove the cotter pin and cotter pin stored in the crumber bar.
4. Slide the crumber back as far as possible (Figure 4).

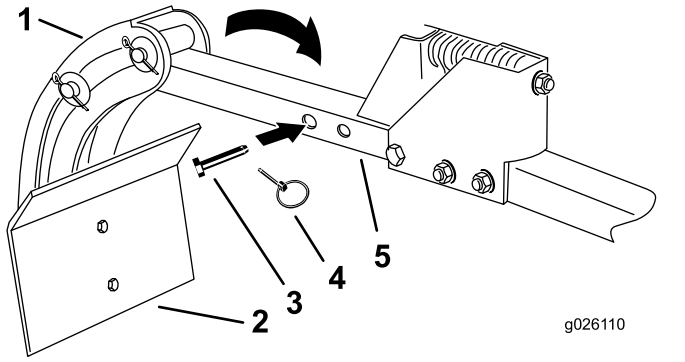

Figure 4

1. Crumber slide
2. Scraper
3. Clevis pin
4. Cotter pin
5. Crumber bar

5. Install the clevis pin through the crumber slide and bar, securing it with the cotter pin (Figure 4).

Changing the Scraper

The scraper (Figure 4) installed on the crumber must correspond to the width of the trencher chain. To replace the scraper that is on the crumber, remove the 2 bolts and 2 nuts securing the scraper, then install the new scraper in its place.

Note: The scrapers are slightly narrower than the chains with which they should be paired. For example, the 6-inch scraper is actually 5-1/2 inches wide but is intended to be used with the 6-inch trencher chain.

California Proposition 65 Warning Information

What is this warning?

You may see a product for sale that has a warning label like the following:



WARNING: Cancer and Reproductive Harm—www.p65Warnings.ca.gov.

What is Prop 65?

Prop 65 applies to any company operating in California, selling products in California, or manufacturing products that may be sold in or brought into California. It mandates that the Governor of California maintain and publish a list of chemicals known to cause cancer, birth defects, and/or other reproductive harm. The list, which is updated annually, includes hundreds of chemicals found in many everyday items. The purpose of Prop 65 is to inform the public about exposure to these chemicals.

Prop 65 does not ban the sale of products containing these chemicals but instead requires warnings on any product, product packaging, or literature with the product. Moreover, a Prop 65 warning does not mean that a product is in violation of any product safety standards or requirements. In fact, the California government has clarified that a Prop 65 warning "is not the same as a regulatory decision that a product is 'safe' or 'unsafe.'" Many of these chemicals have been used in everyday products for years without documented harm. For more information, go to https://oag.ca.gov/prop65/faqs-view-all.

A Prop 65 warning means that a company has either (1) evaluated the exposure and has concluded that it exceeds the "no significant risk level"; or (2) has chosen to provide a warning based on its understanding about the presence of a listed chemical without attempting to evaluate the exposure.

Does this law apply everywhere?

Prop 65 warnings are required under California law only. These warnings are seen throughout California in a wide range of settings, including but not limited to restaurants, grocery stores, hotels, schools, and hospitals, and on a wide variety of products. Additionally, some online and mail order retailers provide Prop 65 warnings on their websites or in catalogs.

How do the California warnings compare to federal limits?

Prop 65 standards are often more stringent than federal and international standards. There are various substances that require a Prop 65 warning at levels that are far lower than federal action limits. For example, the Prop 65 standard for warnings for lead is 0.5 µg/day, which is well below the federal and international standards.

Why don't all similar products carry the warning?

- Products sold in California require Prop 65 labelling while similar products sold elsewhere do not.
- A company involved in a Prop 65 lawsuit reaching a settlement may be required to use Prop 65 warnings for its products, but other companies making similar products may have no such requirement.
- The enforcement of Prop 65 is inconsistent.
- Companies may elect not to provide warnings because they conclude that they are not required to do so under Prop 65; a lack of warnings for a product does not mean that the product is free of listed chemicals at similar levels.

Why does Toro include this warning?

Toro has chosen to provide consumers with as much information as possible so that they can make informed decisions about the products they buy and use. Toro provides warnings in certain cases based on its knowledge of the presence of one or more listed chemicals without evaluating the level of exposure, as not all the listed chemicals provide exposure limit requirements. While the exposure from Toro products may be negligible or well within the "no significant risk" range, out of an abundance of caution, Toro has elected to provide the Prop 65 warnings. Moreover, if Toro does not provide these warnings, it could be sued by the State of California or by private parties seeking to enforce Prop 65 and subject to substantial penalties.