COOKOUT™

1000 PELLET GRILL

ASSEMBLY MANUAL

CPG-1000PG/ P40261

3-YEAR LIMITED WARRANTY

READ AND SAVE MANUAL FOR FUTURE REFERENCE.

READ ALL INSTRUCTIONS BEFORE INSTALLING AND USING THE APPLIANCE.

Assemble your grill immediately.

Missing or damaged parts should be claimed or reported within 30 days of purchase date.

FOR PRODUCT INQUIRIES, PARTS, WARRANTY AND TROUBLESHOOTING SUPPORT,

PLEASE CALL 1-800-249-2506.

CERTIFIED TO UL 2728A-2019 & ULC/ORD-C2728-19 Pellet Fuel Burning. Cooking Appliance and Outline of Investigation for Pellet Fuel Burning. Cooking Appliance.

Master No. 211648
Manual Revision #: 2023.12.13 MK

IMPORTANT SAFETY WARNINGS

THIS MANUAL MUST REMAIN WITH THIS PRODUCT AT ALL TIMES

WARNING

FAILURE TO FOLLOW ALL OF THE MANUFACTURE'S INSTRUNCTIONS COULD RESULT IN HAZARDOUS FIRES, EXPLOSIONS, PROPERTY DAMAGE, OR SERIOUS RERSONAL INJURY OR EVEN DEATH.

CAUTION

- DO NOT TRY TO START THEIS PELLET GRILL WITHOUT READING AND UNDERSTANDING THE SAFETY RISKS AND INSTRUCTIONS FOR USE, OUTLINED IN THIS SAFE USE AND CARE MANUAL.
- IN DIRECT SUN, AND IN OPERATION, YOUR PELLET GRILL'S PAINTED STEEL PARTS CAN BECOME VERY HOT, TOUCHING ANY OF THE SURFACES WITHOUT PROTECTIVE GLOVES MAY CASE BURNS.
- SOME PARTS MAY CONTAIN SHARP EDGES. WEAR PROTECTIVE GLOVES DURING ASSEMBLY AND USAGE OF THIS APPLIANCE.

CAUTION

- NEVER USE GASOLINE OR LIGHTER FLUID TO MANUALLY LIGHT YOUR GRILL.
- FAILURE TO FOLLOW THESE SAFEGUARDS MAY RESULT IN SERIOUS INJURY OR EVEN DEATH.
- THIS APPLIANCE MUST NOT BE OPERATED UNATTENDED.
- KEEP CHILDREN AND PETS AWAY FROM GRILL.
- FOR RESIDENTIAL USE ONLY. DO NOT USE FOR COMMERCIAL COOKING.

ELECTRICAL SAFETY & WARNINGS

- HAZARDOUS VOLTAGE CAN SHOCK, BURN OR CAUSE DEATH. DO NOT IMMERSE CORD IN WATER OR OTHER LIQUIDS.
- ONLY PLUG THIS APPLIANCE INTO A GFCI PROTECTED CIRCUIT. USE ONLY EXTENSION CORDS APPROVED FOR OUTDOOR USE MARKET WITH W-A AND RATED FOR THE POWE OF THIS APPLANCE.
- KEEP THE ELECTRICL SUPPLY CORD AWAY FROM AND HEATED SURFACE.
- UPLUG FROM THE OUTLET WHEN NOT IN USE AND BEFORE CLEASNING OR SERVICING.

FIRE SAFETY

- DO NOT MOVE APPLIANCE.
- IF YOU EXPERIENCE A FIRE DO NOT THROW WATER. DO NOT TRY TO SMOTHER THE FIRE.
- UPLUG THE ELECTRICAL CORD OR EXTENSION CORD, AND CALL THE FIRE DEPARTMENT.

WOOD PELLET WARNINGS

- FOR USE WITH NATURAL HARDWOOD PELLETS FOR GRILLING. NEVER USE HEATING PELLETS OR CHARCOAL PELLETS WITH THIS GRILL.
- ALWAYS STORE WOOD PELLETS IN A DRY LOCATION, AWAY FROM HEAT-PRODUCING APPLIANCES AND OTHER FUEL CONTAINERS, IN A SEALED CONTAINER.
- TO DISPOSE OF ASHES ALWAYS WAIT UNTIL COOLED BEFORE PLACING IN A NONCOMBUSTIBLE, METAL CONTAINER WITH LID. CHECK WITH LOCAL AUTHORITIES FOR PROPER DISPOSAL.

THIS GRILL IS FOR OUTDOOR USE ONLY

CAUTION

Some parts may contain sharp edges, especially as noted in the manual. Wear protective gloves during assembly and usage of this appliance.
For residential use ONLY. Do not use for commercial cooking.

CAUTION

Do not attempt to repair or alter the hose and regulator or valve assembly for any assumed defect or for any type of retro fit or conversion. Any modifications to this assembly will void your warranty and create the risk of a gas leak and fire. Use only authorized replacement parts supplied by the manufacturer, for your model.

A MAJOR CAUSE OF FIRES IS FAILURE TO MAINTAIN REQUIRED CLEARANCES (AIR SPACE) TO COMBUSTIBLE MATERIALS. IT IS OF UTMOST IMPORTANCE THAT THIS PRODUCT BE INSTALLED ONLY IN ACCORDANCE WITH THESE INSTRUCTIONS.

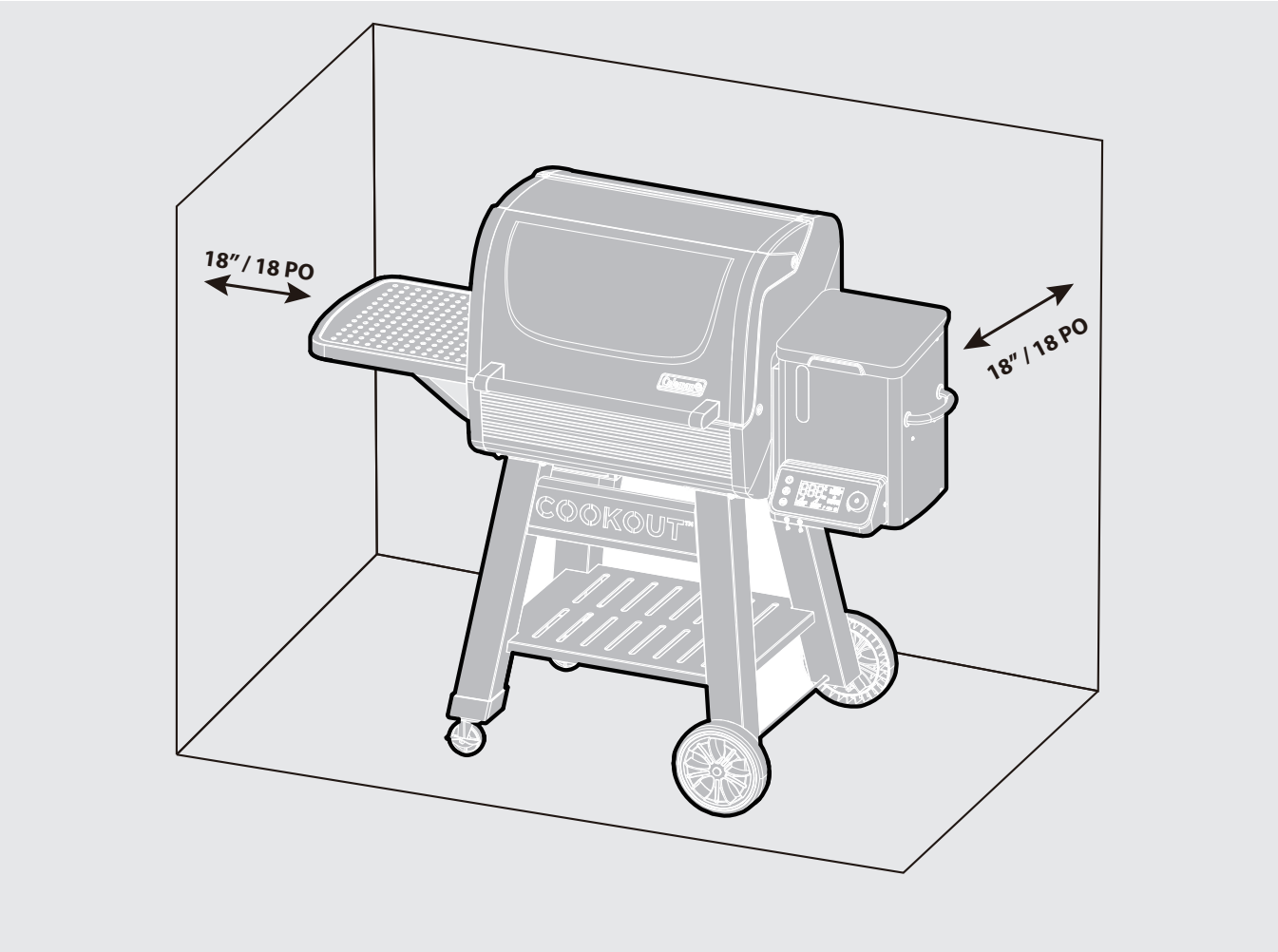

⚠ WARNING

When operating this grill, maintain a minimum distance of 18" (45.72 cm) on all sides, from a dwelling, walls, aluminum siding, windows, fencing and any other combustible material.

⚠ WARNING

When operating this grill under overhead combustibles a minimum of 40" (101.6 cm) is required.

HARDWARE PACK

Tools Required

- Phillips screwdriver
- Slotted screwdriver
- Pliers

No.	Description	Part Number	Qty.
1	1/4"-20UNC x 13 Screw	20120-13013-036	36
2	NO.10-24UNC x10 Screw	20124-10010-810	22
3	1/4”-20UNC x 45 Screw Assembly	20120-13045-810A	2
4	Wheel Washer	G367-0005-9000	4
5	Hitch Pin	G515-0013-9000	1
6	Side Shelf Screw	P402-0035-9091	2
7	Allen Key For Hopper Assembly	G473-0025-9086	1
8	Caster Pin	G350-0026-9000	1
9	Lid Handle Washer	P402-0066-9000	2

Caution:

Sheet metal can cause injury. Wear gloves when installing the grill.

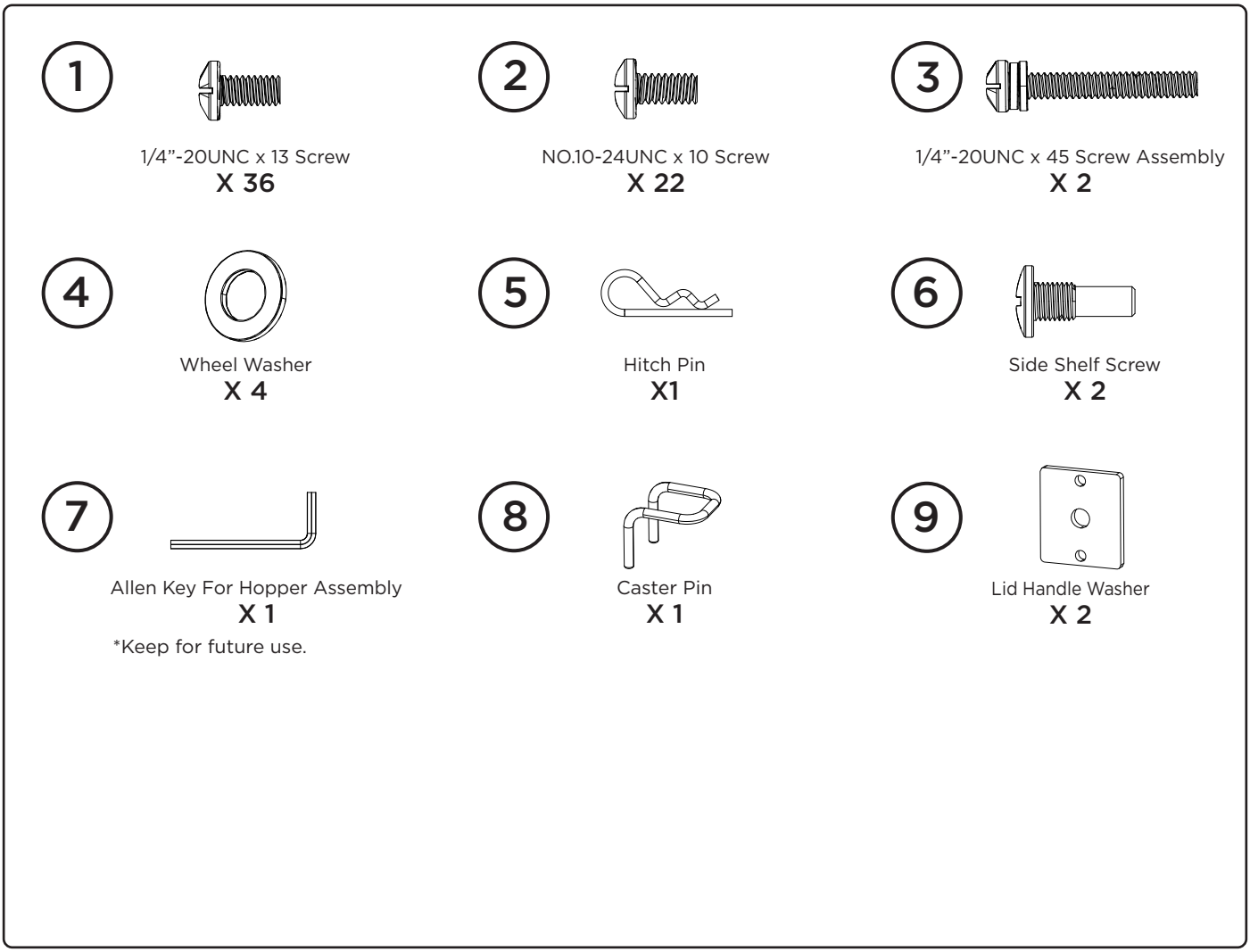

BEFORE ASSEMBLING THIS GRILL, READ THE INSTRUCTIONS CAREFULLY.

Assemble the pellet grill on a flat, clean surface. This grill is heavy. Two people are recommended to complete assembly.

PARTS LIST FOR CPG-1000PG / P40261

KEY#	QTY.	DESCRIPTION	PART NO.
AA	1	Pellet Lid	P402-4000-01
AB	1	Pellet Lid Handle	P402-0061-01
AC1	1	Lid Handle Bezel,Left	P402-0062-01
AC2	1	Lid Handle Bezel,Right	P402-0063-01
AD	1	Coleman Logo Plate	G522-0006-01
AE	2	Lid Screw	P402-0046-01
AF	2	Lid Bumper	G367-0016-01
BA	1	Firebox	P402-0100-01
BB	2	Support Bracket A	P402-0004-01
BC	4	Support Bracket B	P402-0005-01
BD	4	Support Bracket C	P402-0006-01
BE	2	Sensor Shield	P402-0007-01
BF	1	Sensor	P402-0031-01
BG	1	Bottom Cooking Grate	P402-0038-01
BH	1	Middle Cooking Grate	P402-0039-01
BI	1	Top Cooking Grate	P402-0040-01
BJ	1	Baffle Plate	P402-0037-01
BK	1	Meat Probe Groumment	P402-0008-01
BL	2	Heat Seal Gasket A	P402-0041-01
BM	2	Heat Seal Gasket B	P402-0042-01
BN	1	Hopper Assembly	P402-3200-01
BO	1	Grease Trough	P402-0200-01
BP	1	Grease Cup Support Bracket	P402-0036-01
BQ	1	Grease Cup	P402-1300-01
BR	1	Heat Shield, Grease Cup	P402-0048-01
CA	1	Side Shelf Table	P402-1200-01
CB	1	Side Shelf Bracket	P402-0053-01
CC	1	Side Shelf Support Brace	P402-0034-01
DA	1	Front Cart Leg, Left	P402-0800-01
DB	1	Front Cart Leg, Right	P402-0900-01
DC	1	Rear Cart Leg, Left	P402-1000-01
DD	1	Rear Cart Leg, Right	P402-1100-01
DE	1	Front Panel	P402-0027-01
DF	1	Rear Panel	P402-0028-01
DG	1	Bottom Panel	P402-0026-01
DH	1	Leg End Cap, Front	P402-0029-01
DI	1	Leg End Cap, Rear	P402-0030-01
DJ	2	Castor with Lock	G350-0023-01
DK	2	Wheel Assembly	P402-3400-01
DL	1	Wheel Axle	P402-0058-01
E1	1	Hardware Pack	P402-B061-01
E2	1	Assembly Manual	P402-M061-01
E3	1	Safe Use and Care Manual	P402-M061-02

EXPLODED DIAGRAM FOR CPG-1000PG / P40261

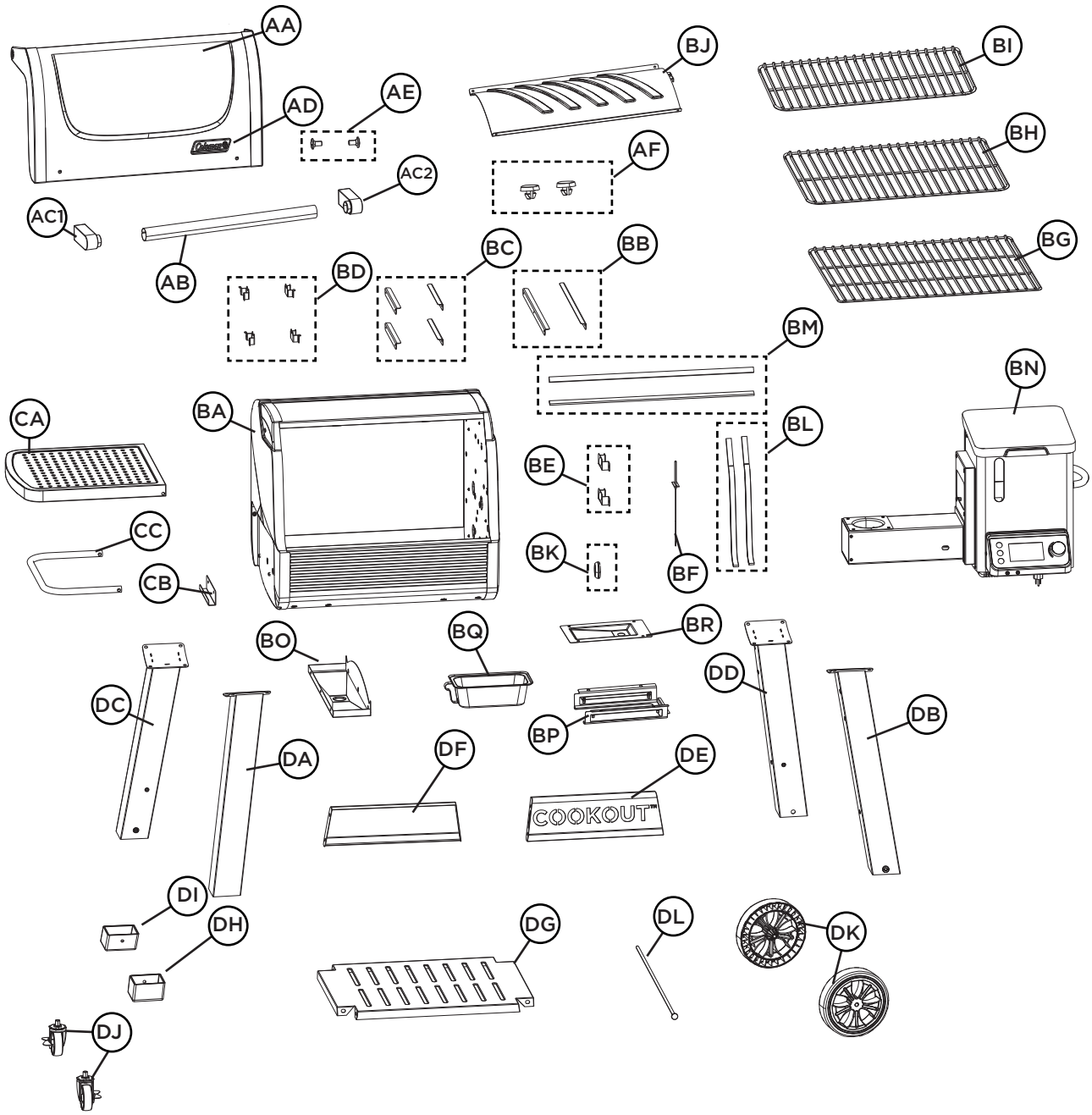

Extras

Hardware Pack	Assembly Manual	Safe Use & Care Manual
E1	E2	E3

AFTER-SALES PARTS LIST FOR HOPPER ASSEMBLY/P402-3200-01

KEY#	QTY.	DESCRIPTION	PART NO.
BN1	1	Hopper Cover	P402-0700-01
BN2	1	Hopper Safety Screen	P402-0016-01
BN3	1	Hopper Housing	P402-2600-01
BN4	1	Viewing Window	P402-0013-01
BN5	1	Digital Controller Assembly	P402-1500-01
BN6	1	Digital Control knob	P402-1502-01
BN7	1	Fuse	P401-1411-01
BN8	2	Meat Probes	P402-0022-01
BN9	1	Hopper Base Plate	P402-0025-01
BN10	2	Lifting Handle Bezel	G457-0020-01
BN11	1	Lifting Handle	P402-0015-01
BN12	1	Power Cord	P401-1401-01
BN13	1	Insluated Gasket	P402-0021-01
BN14	1	Auger Motor	P402-0019-01
BN15	1	Auger Bushing	P401-0902-01
BN16	1	Auger Box	P402-0500-01
BN17	1	Auger Box Housing	P402-0018-01
BN18	1	Auger Box End Cap	P402-0047-01
BN19	1	Burner Pot	P401-1300-01
BN20	1	Auger	P402-0600-01
BN21	1	Igniter	P401-0905-01
BN22	1	Combustion Fan	P402-0020-01
BN23	1	Release Channel	P401-1405-01
BN24	1	Channel Stopper	P402-1400-01
BN25	1	Channel Stopper Bolt	P401-1404-01

*** This unit is shipped with an extra 5-AMP fuse, that is located either on the cover of your Safety & Care Manual, or attached directly to the back of the digital controller.**

HOPPER ASSEMBLY EXPLODED DIAGRAM / P402-3200-01

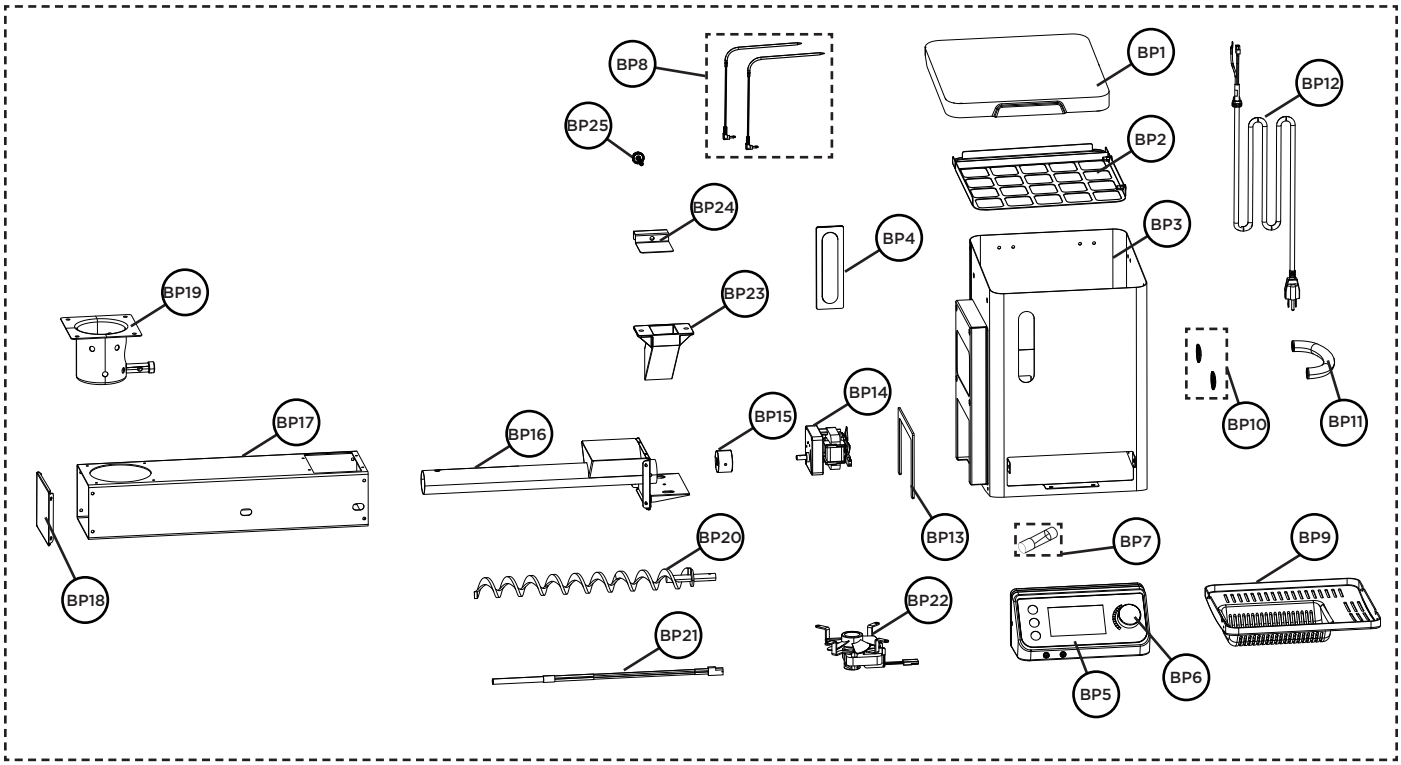

1

ATTENTION: To avoid scratches and damage during assembly, layout a soft cloth before turning the firebox and lid onto its side.

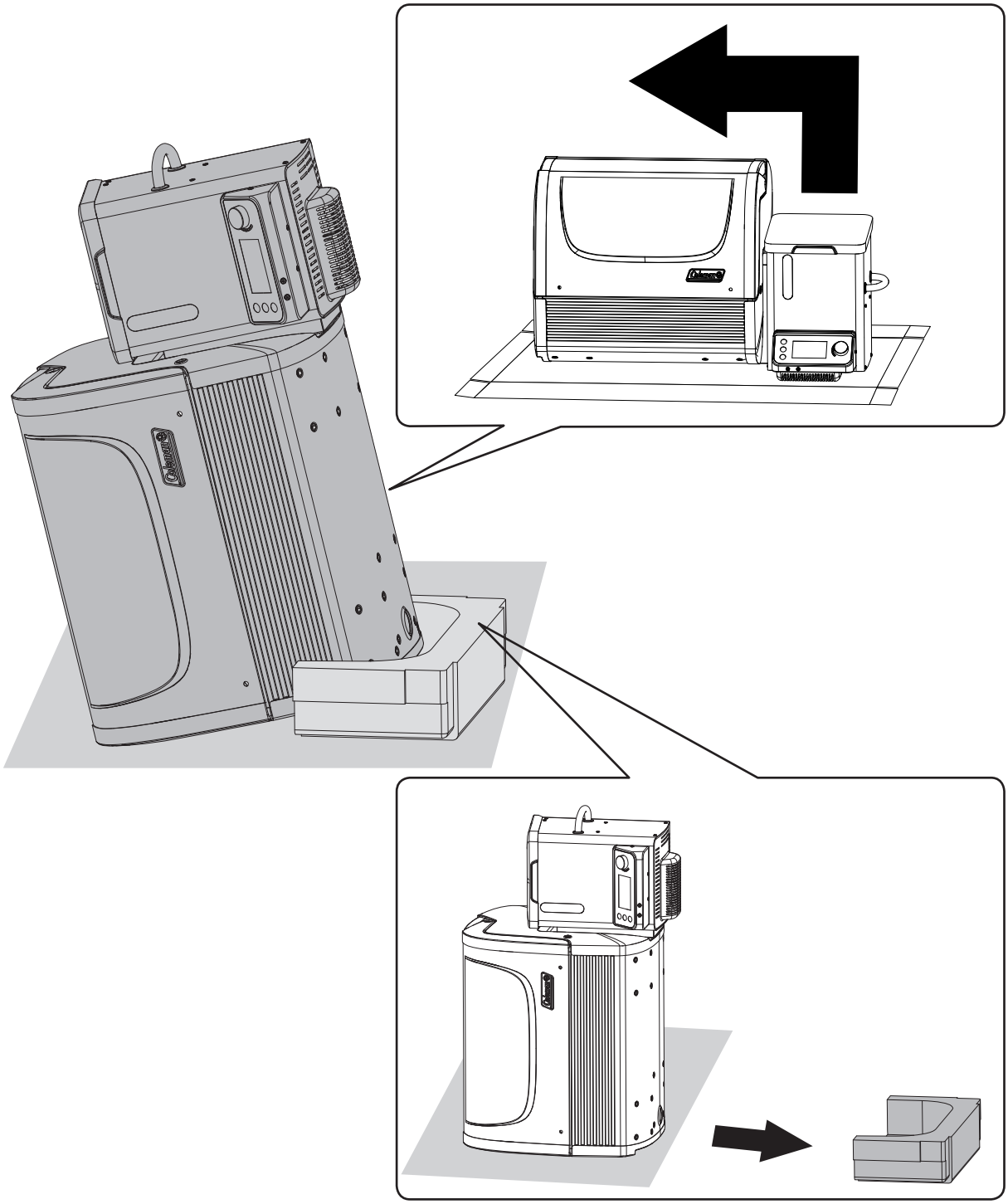

NOTE: Save the Styrofoam as it is needed in step 10.

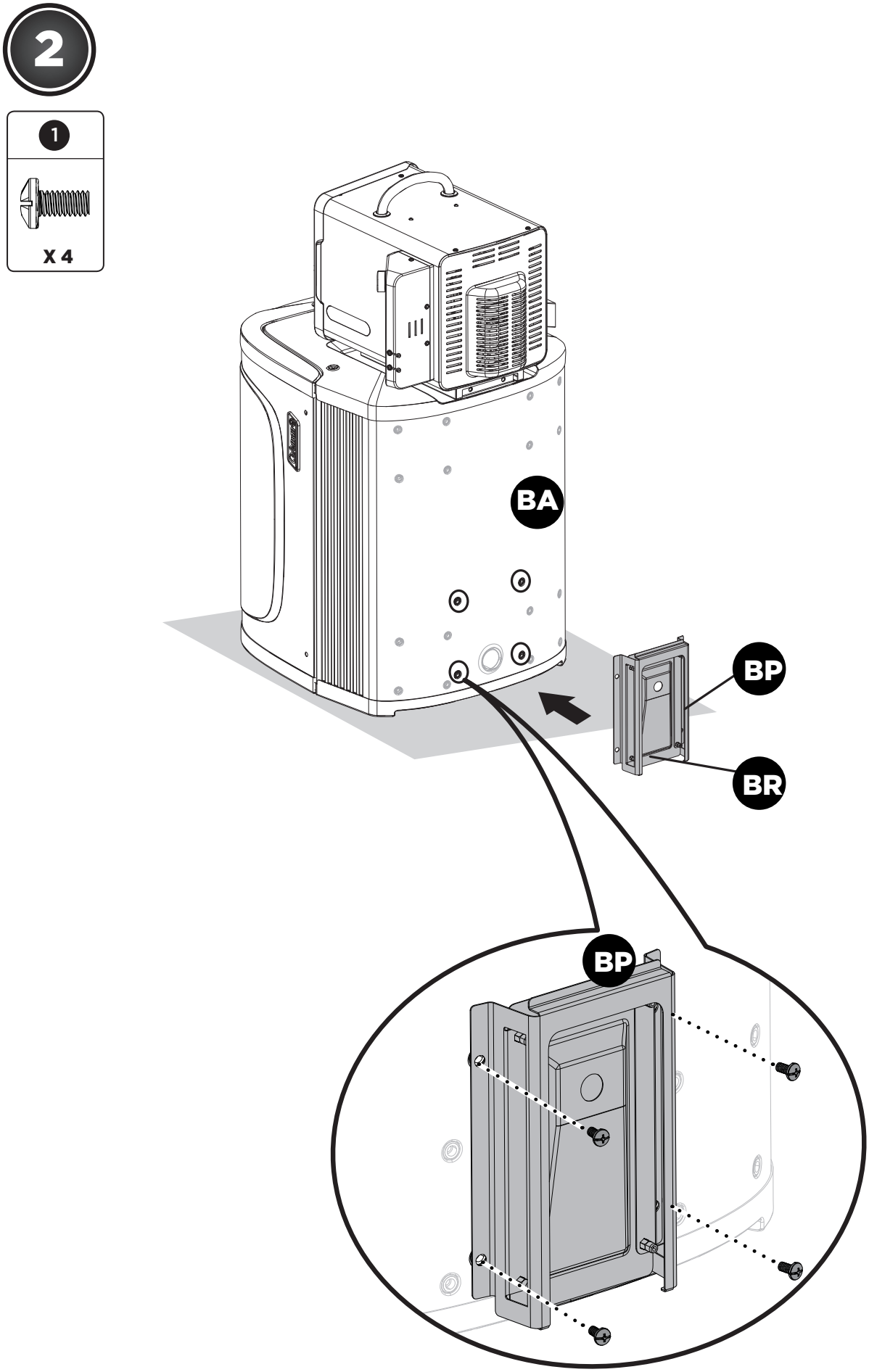
2
1
X 4
BA
BP
BR
BP

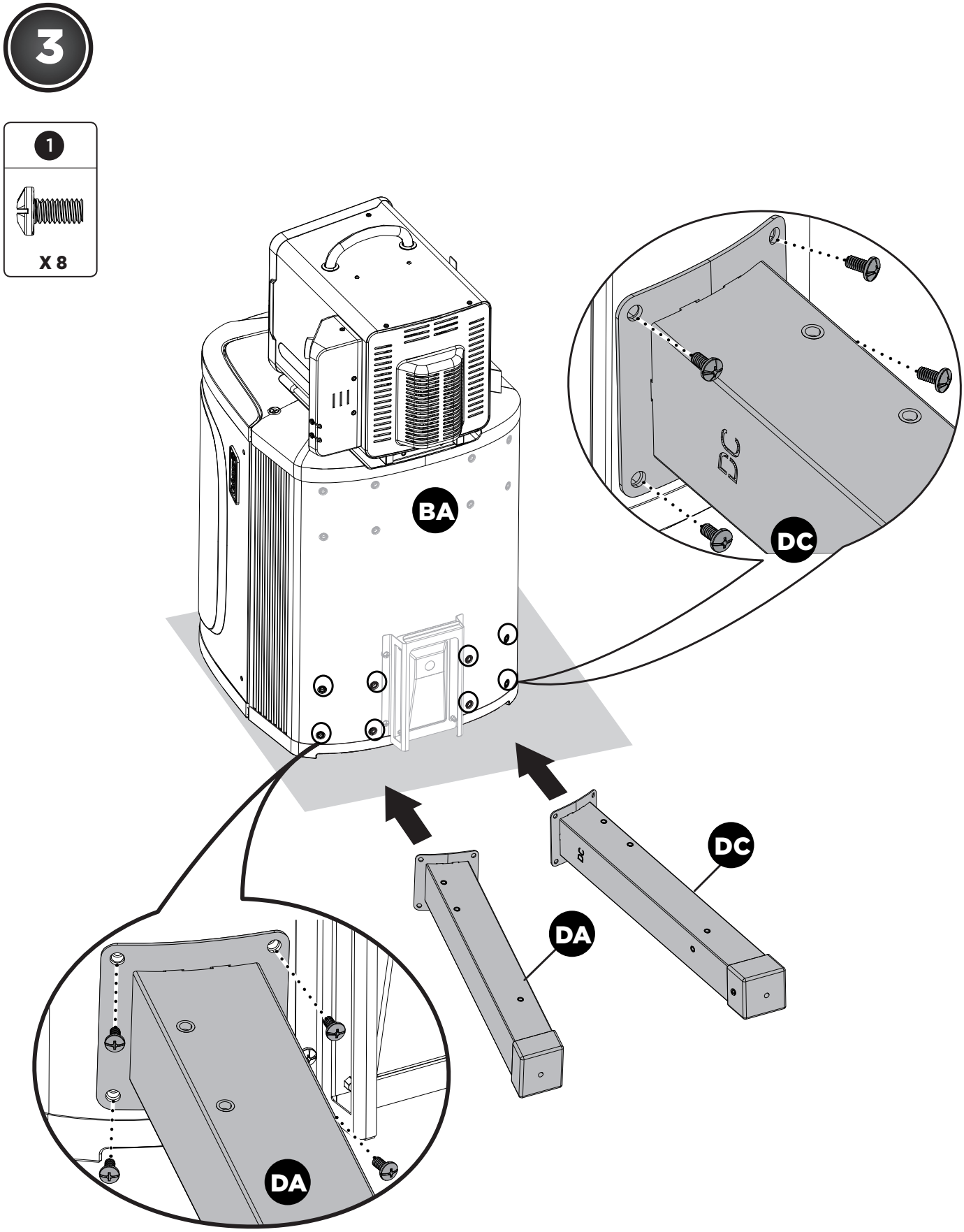
3
1
X 8
BA
DC
DC
DA
DA

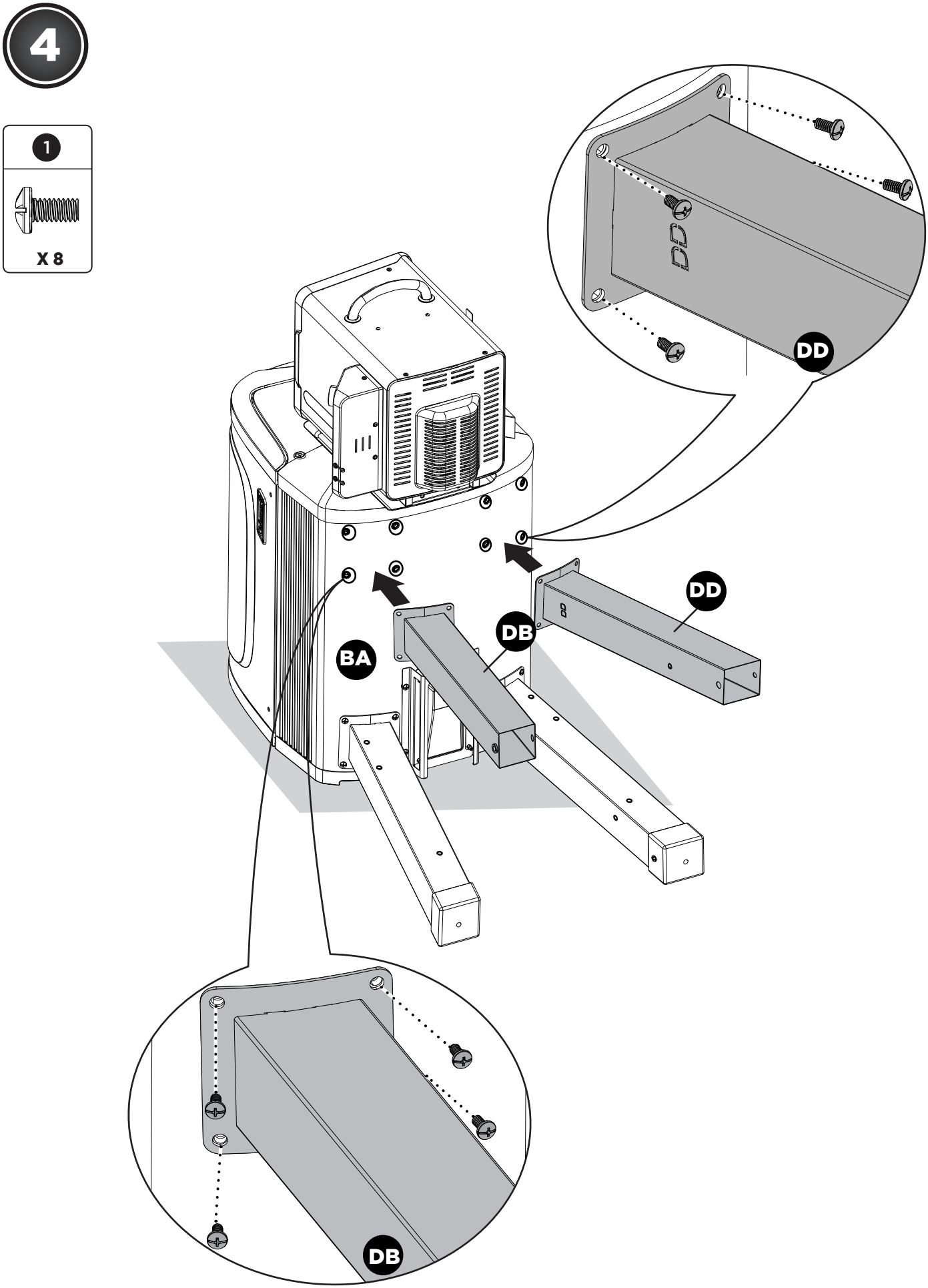
4
1
X 8
DD
DD
DB
BA
DB

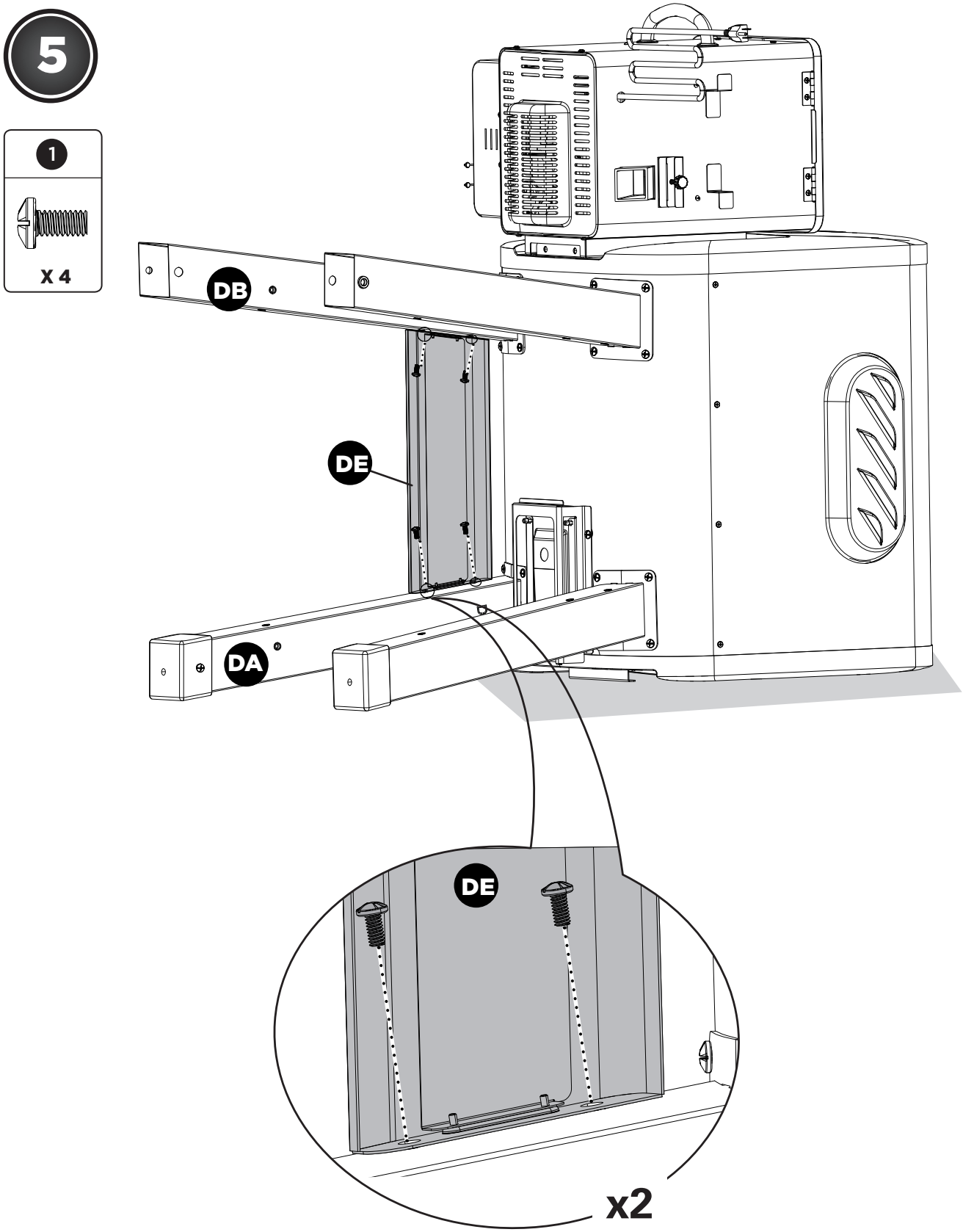
5
1
X 4
DB
DE
DA
DE
x2

6

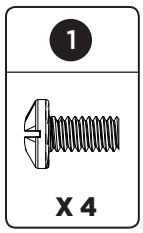

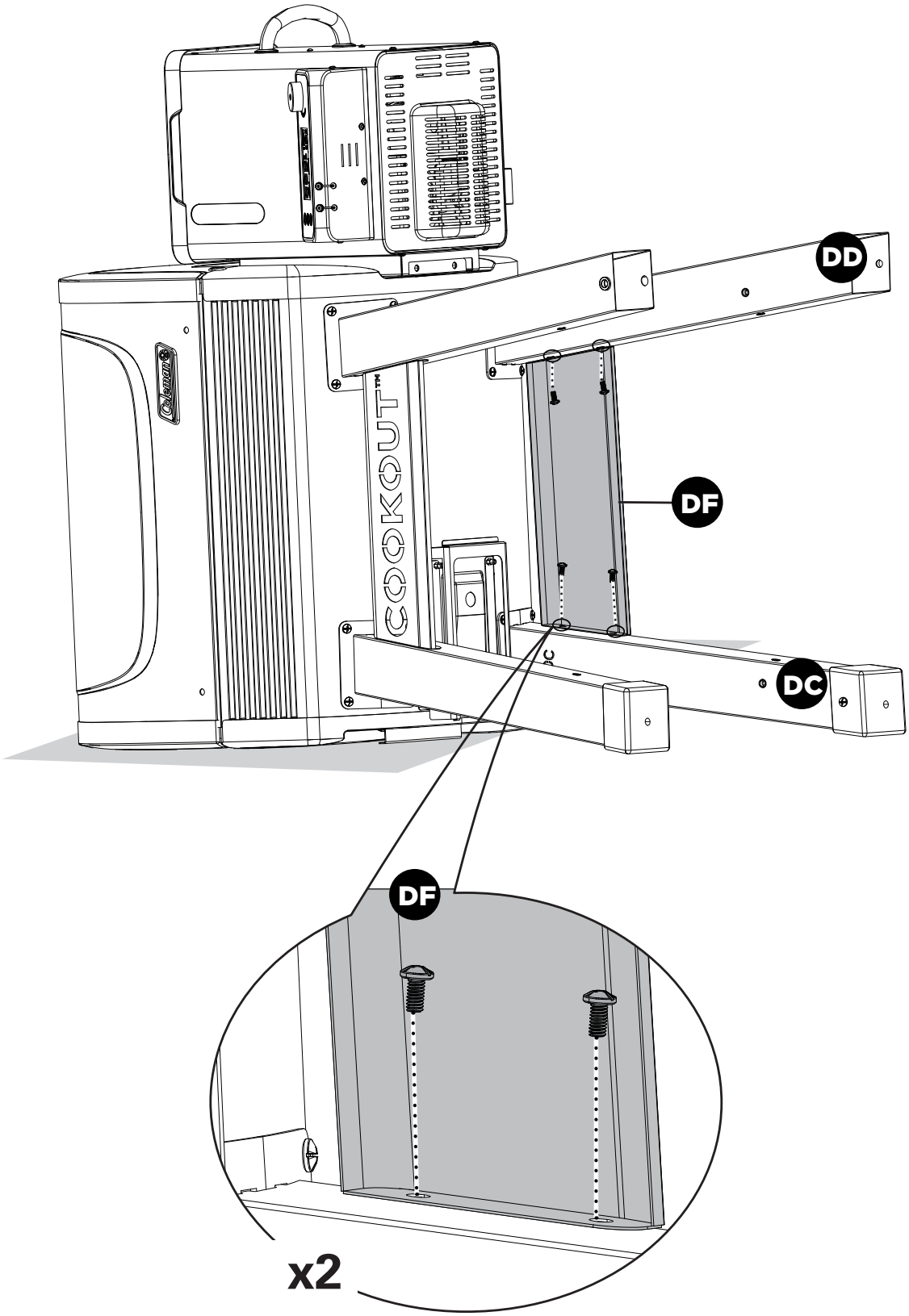

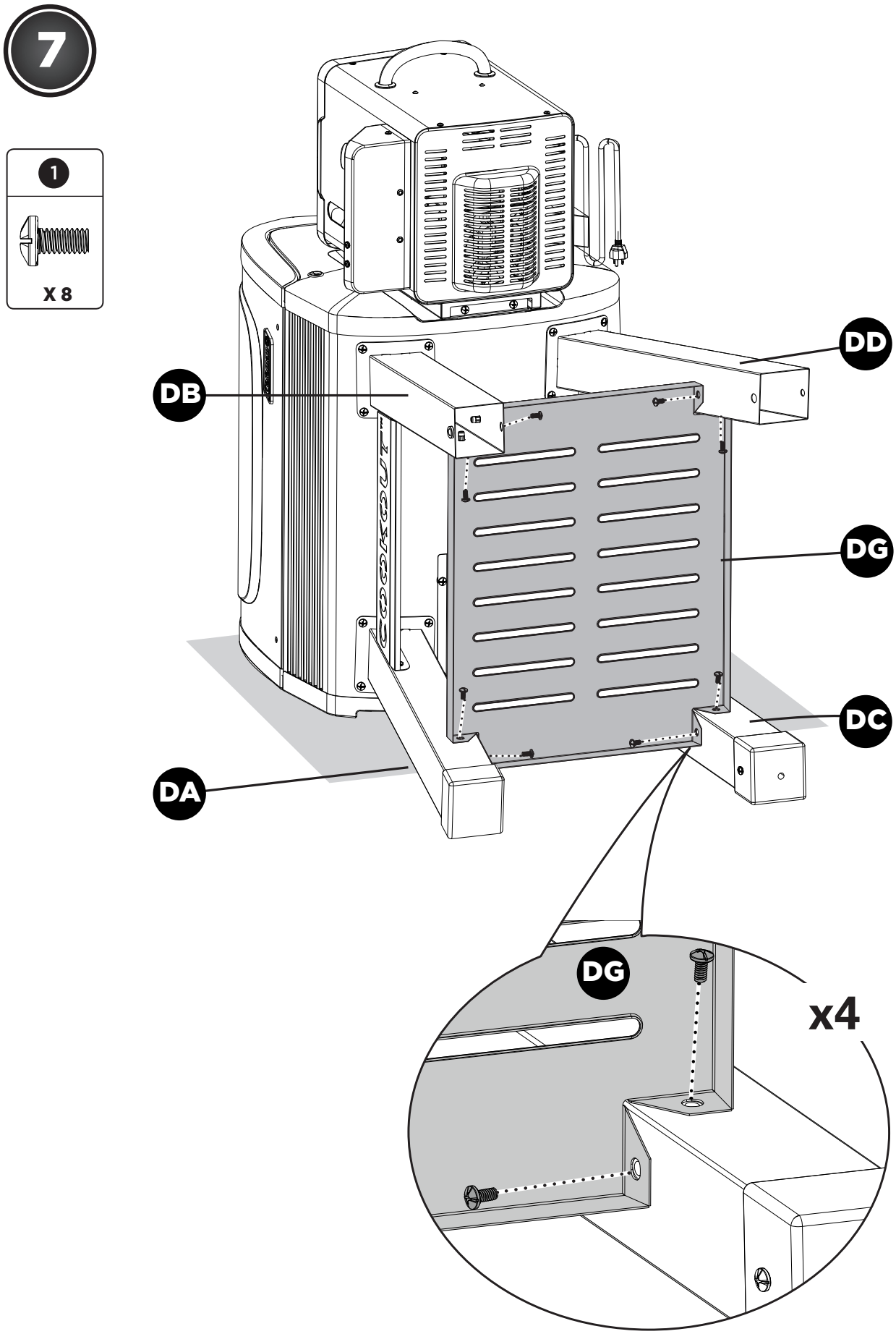
7
1
X 8
DD
DB
DG
DC
DA
DG
x4

8

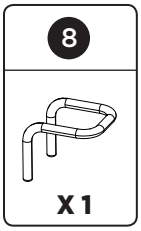

Note: Use this pin as a tool to lock both casters during assembly.

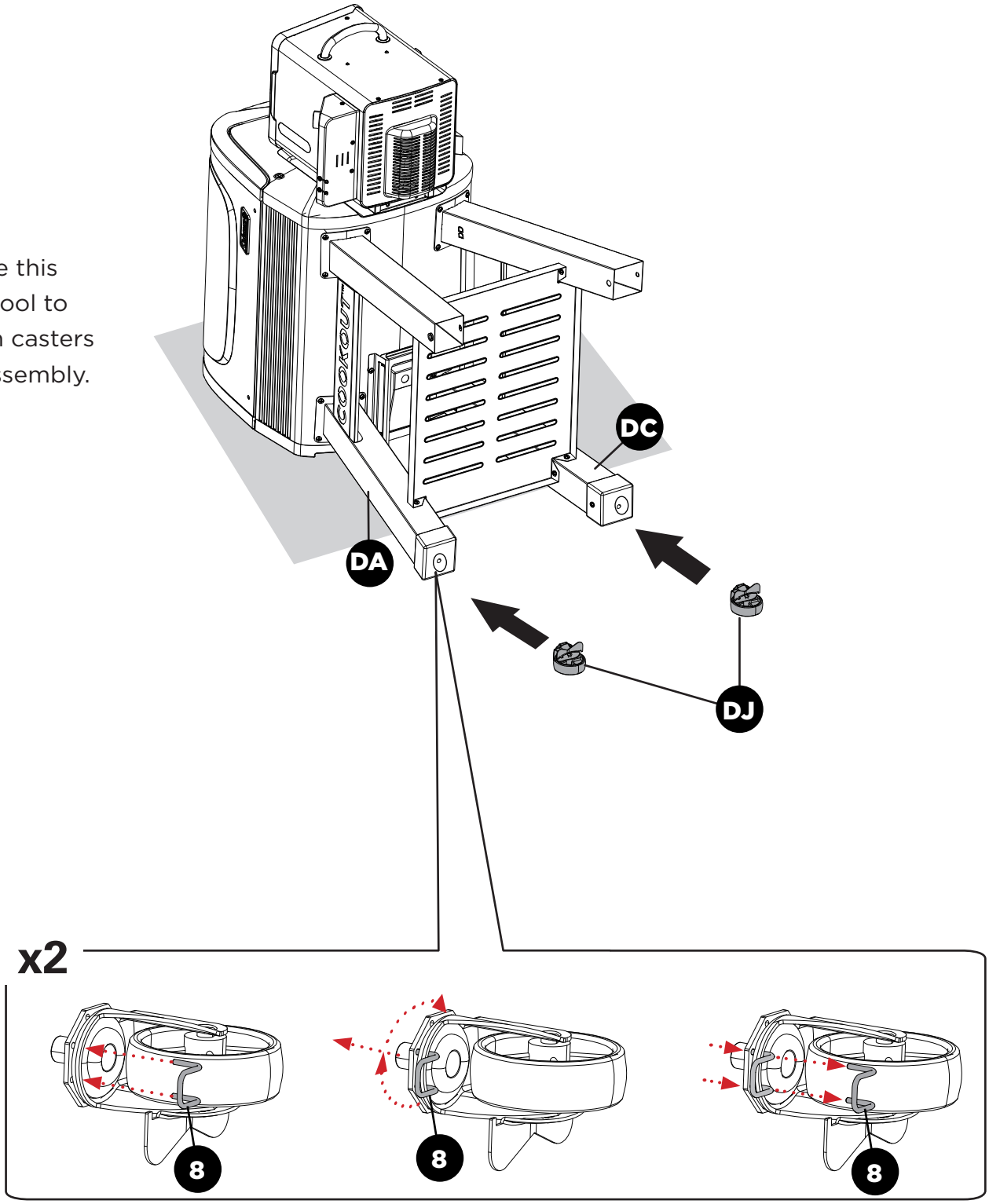

9

4	5
X 4	X 1

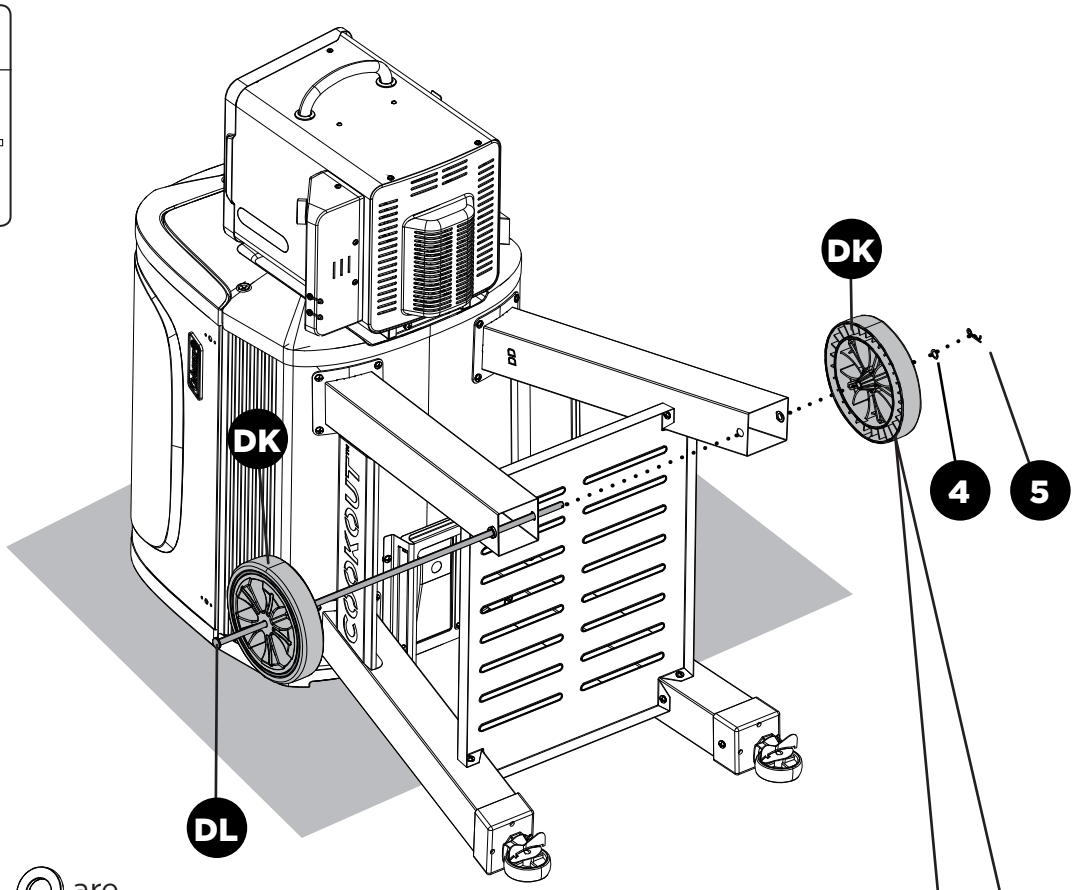

ATTENTION: 4 x ◯ are available for this assembly step. Start with a single washer. If the wheel is not fully stabilized, add additional washers to fill the gap.

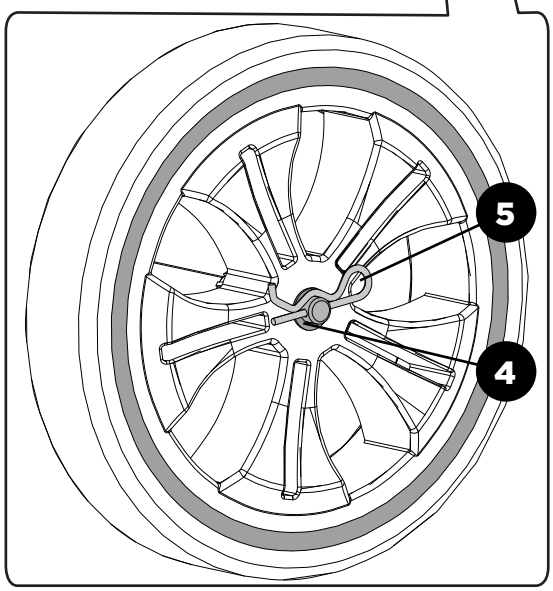

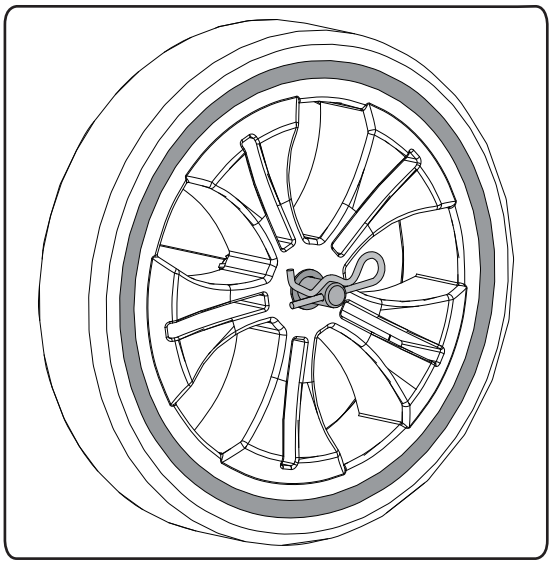

10

ATTENTION : Place the Styrofoam under the left cart leg before lifting the unit.
Before lifting make sure both casters are in the lock position to avoid damaging the casters while lifting the unit.

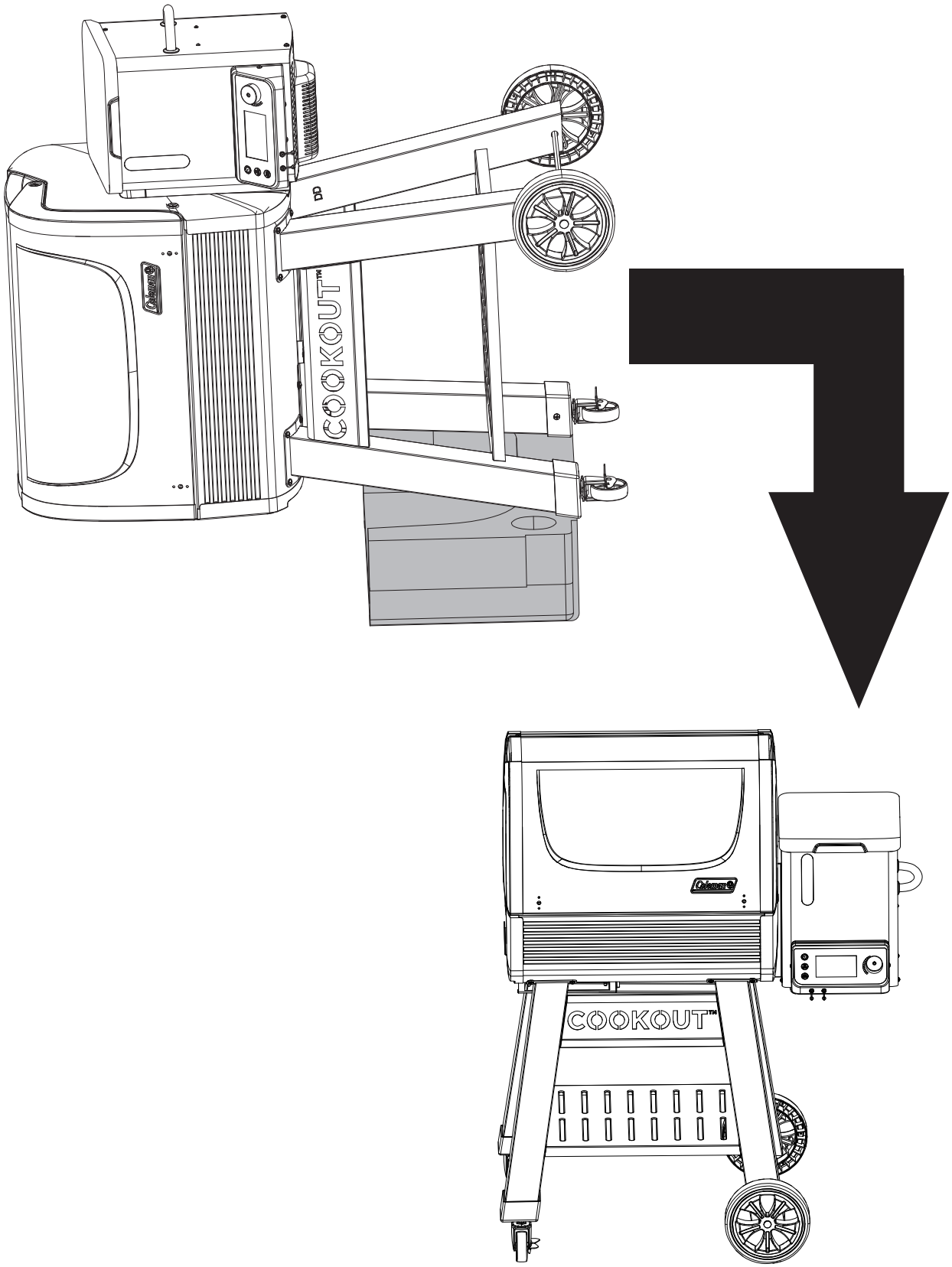

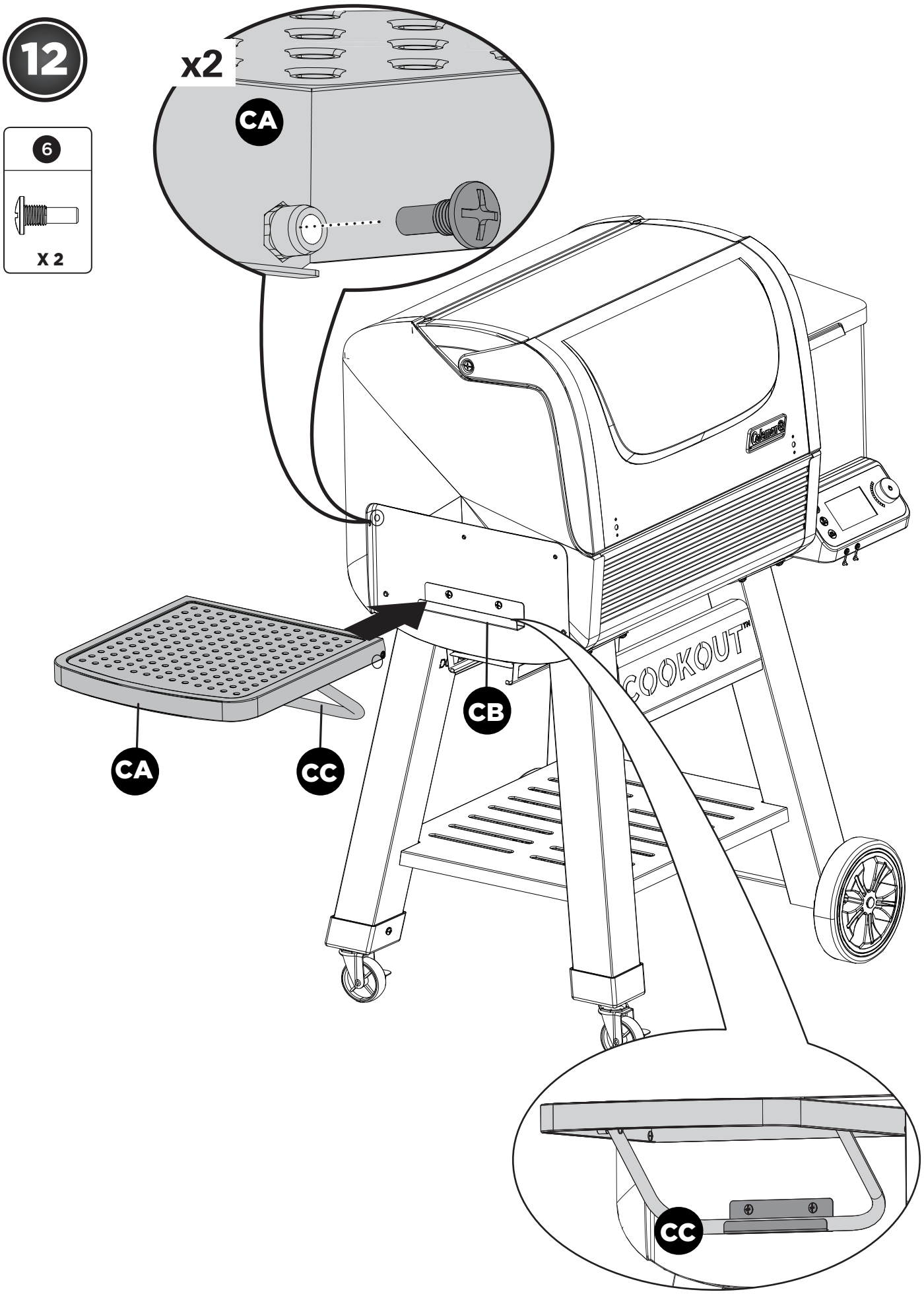
12
6
X 2
x2
CA
CB
CC
CA
CC
COOKOUT™

13

3	9
X 2	X 2

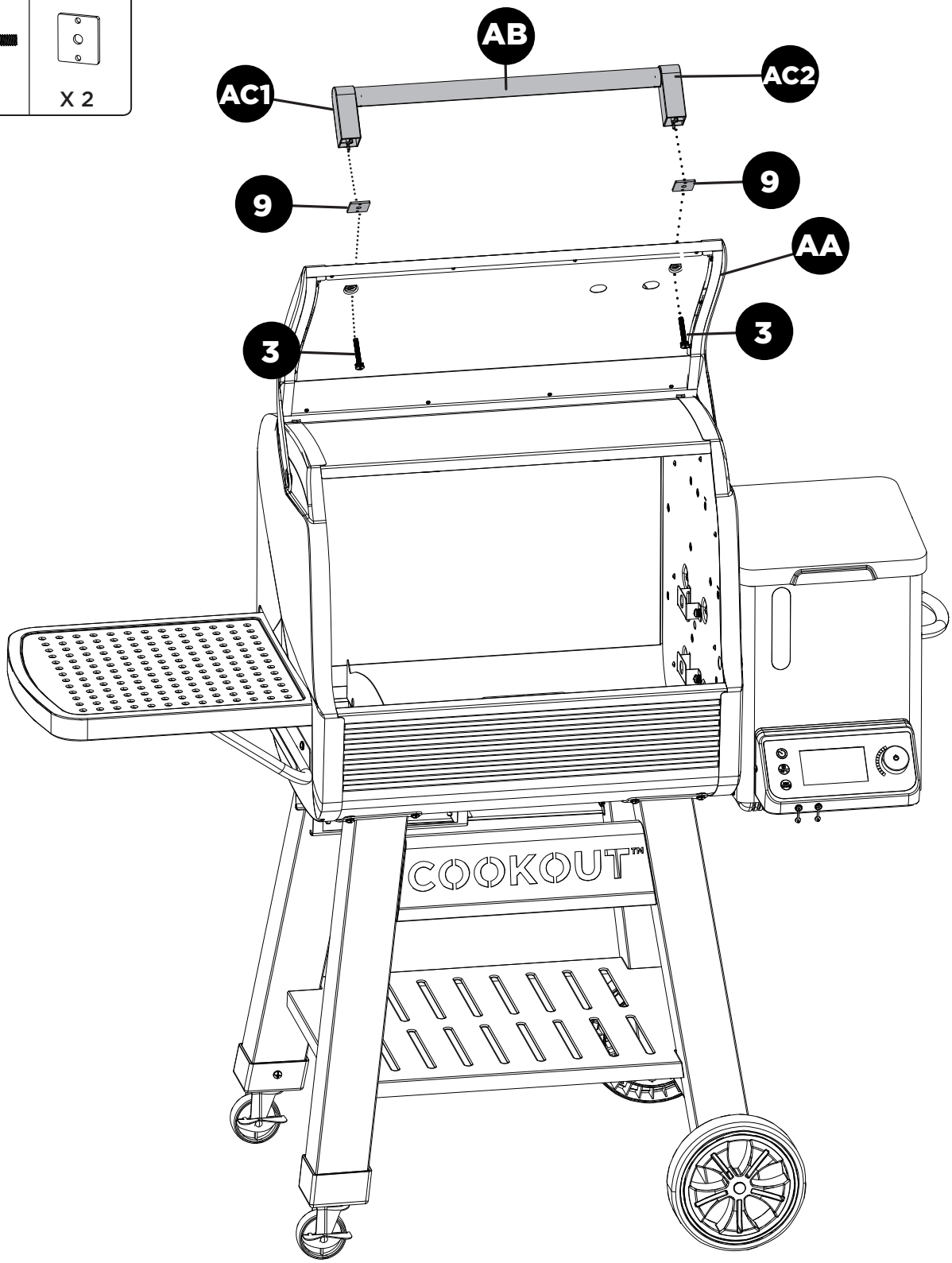

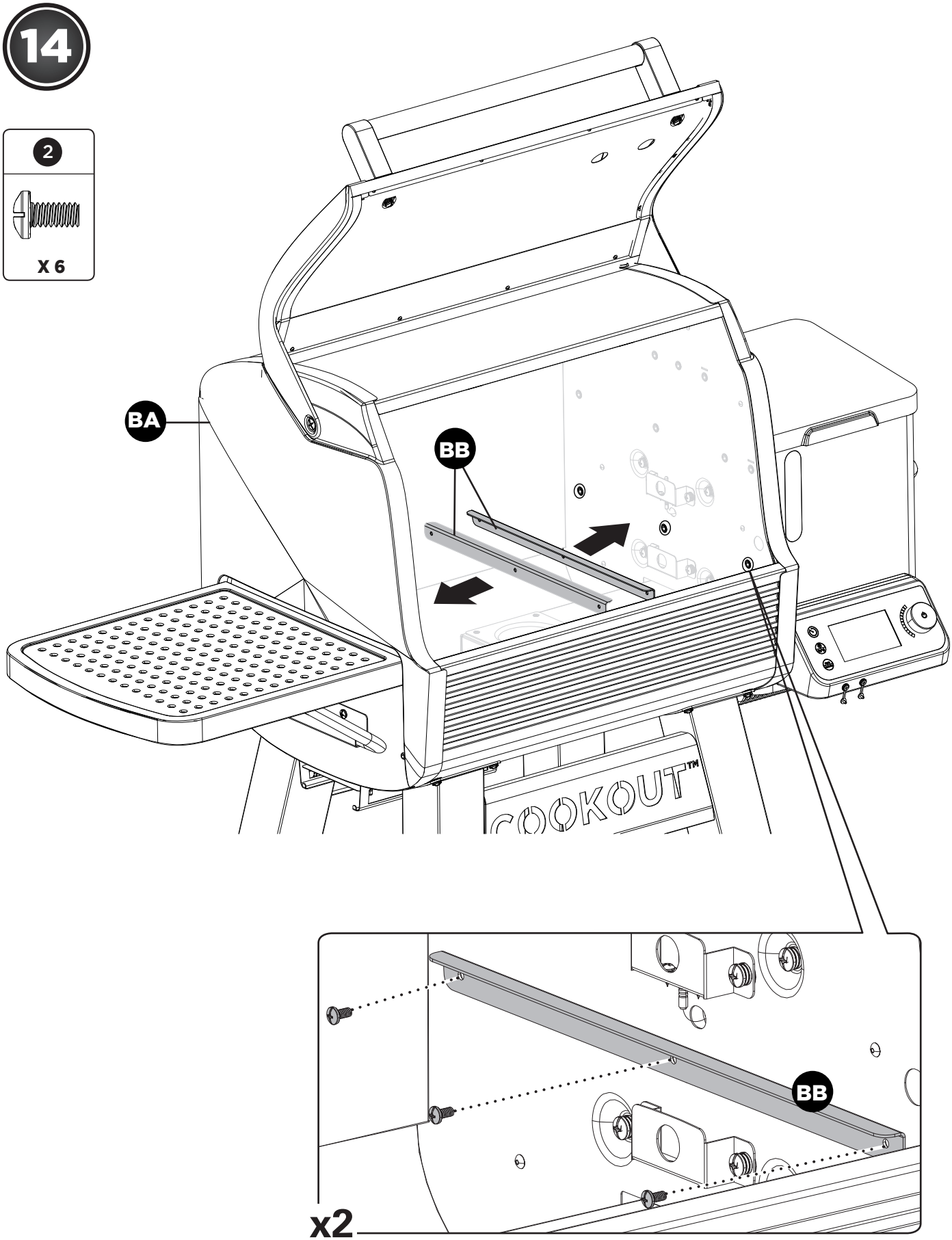
14
2
X 6
BA
BB
COOKOUT™
BB
x2

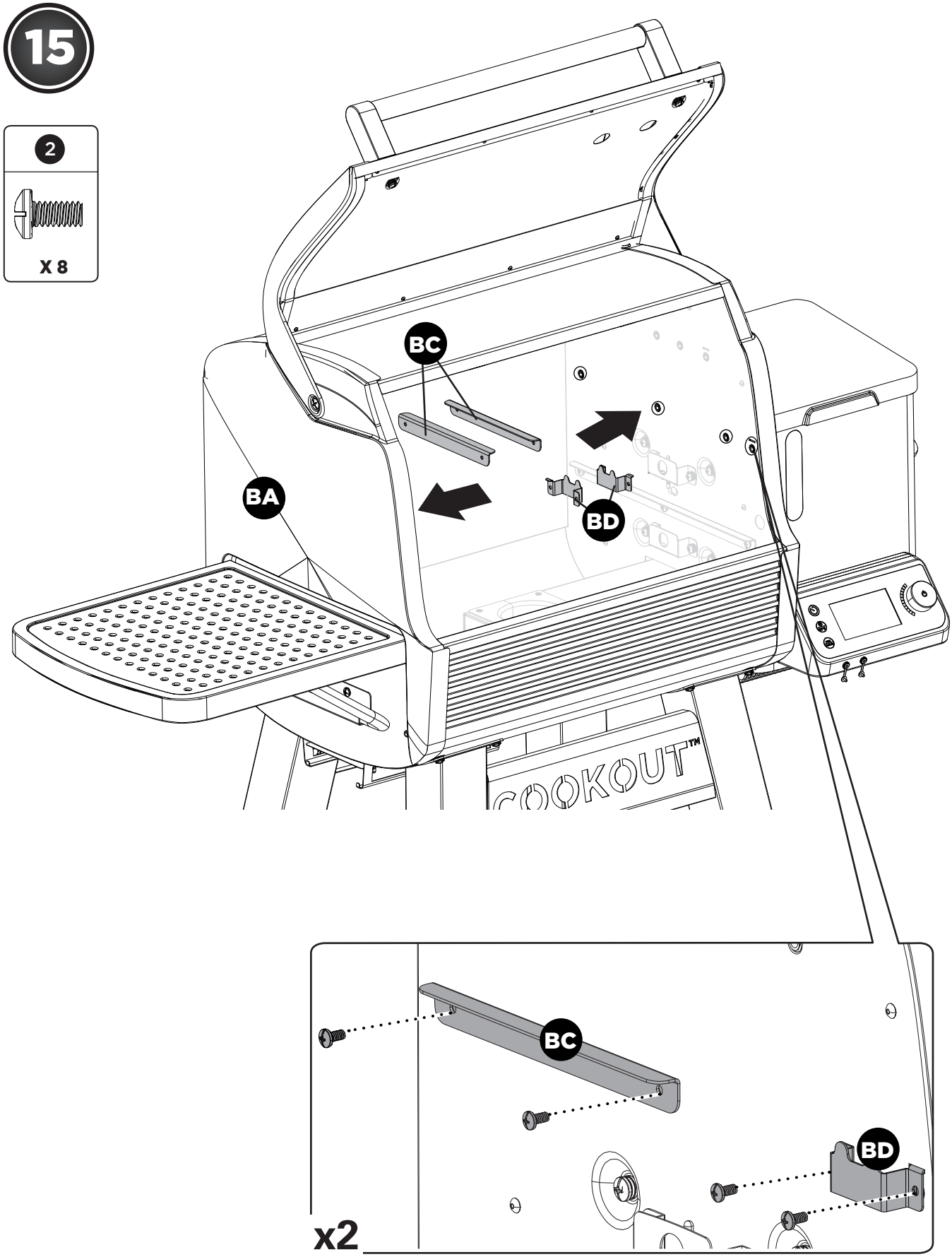
15
2
X 8
BC
BA
BD
COOKOUT™
BC
BD
x2

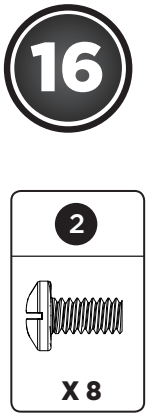
16
2
X 8

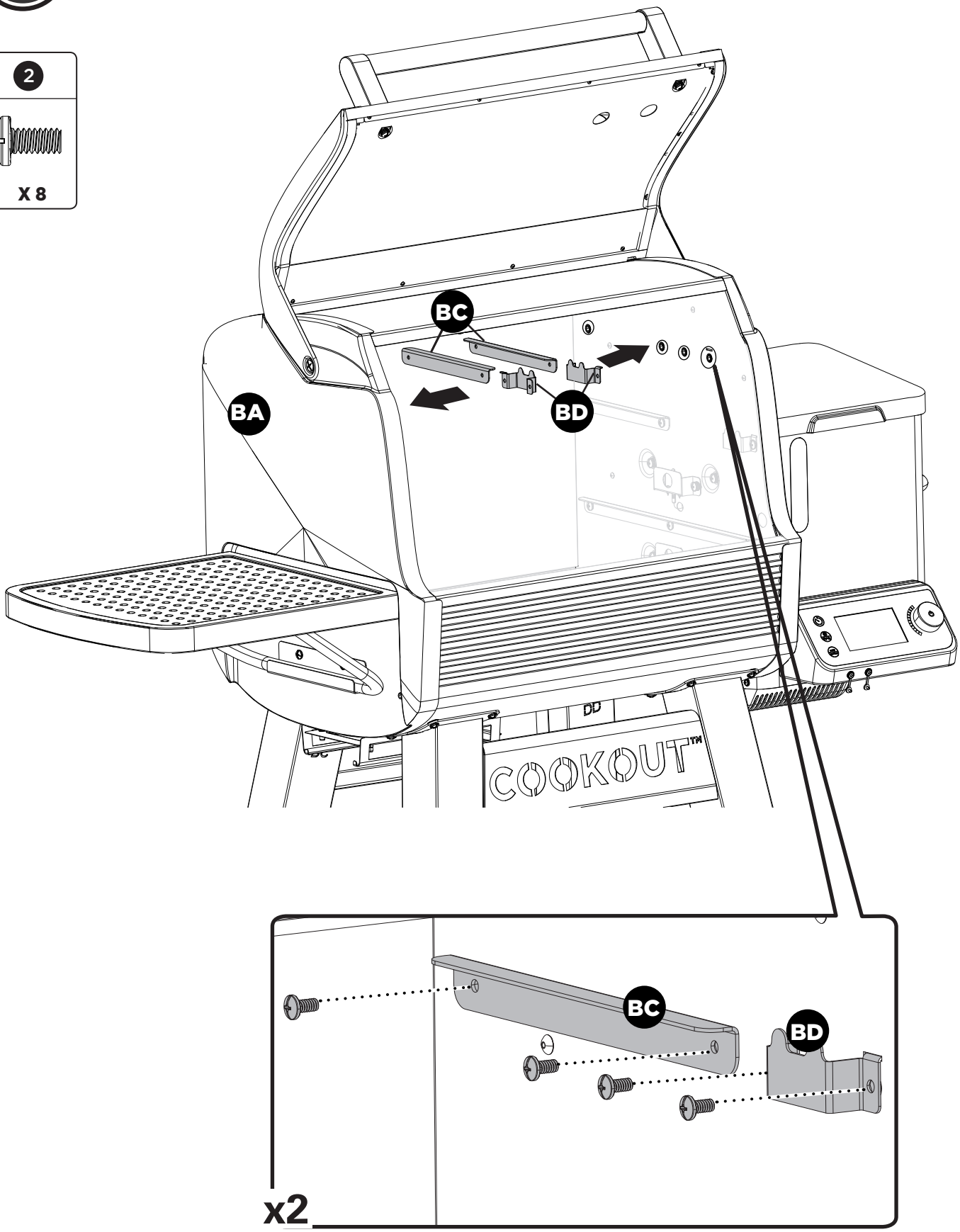
BC
BA
BD
COOKOUT™
BC
BD
x2

17

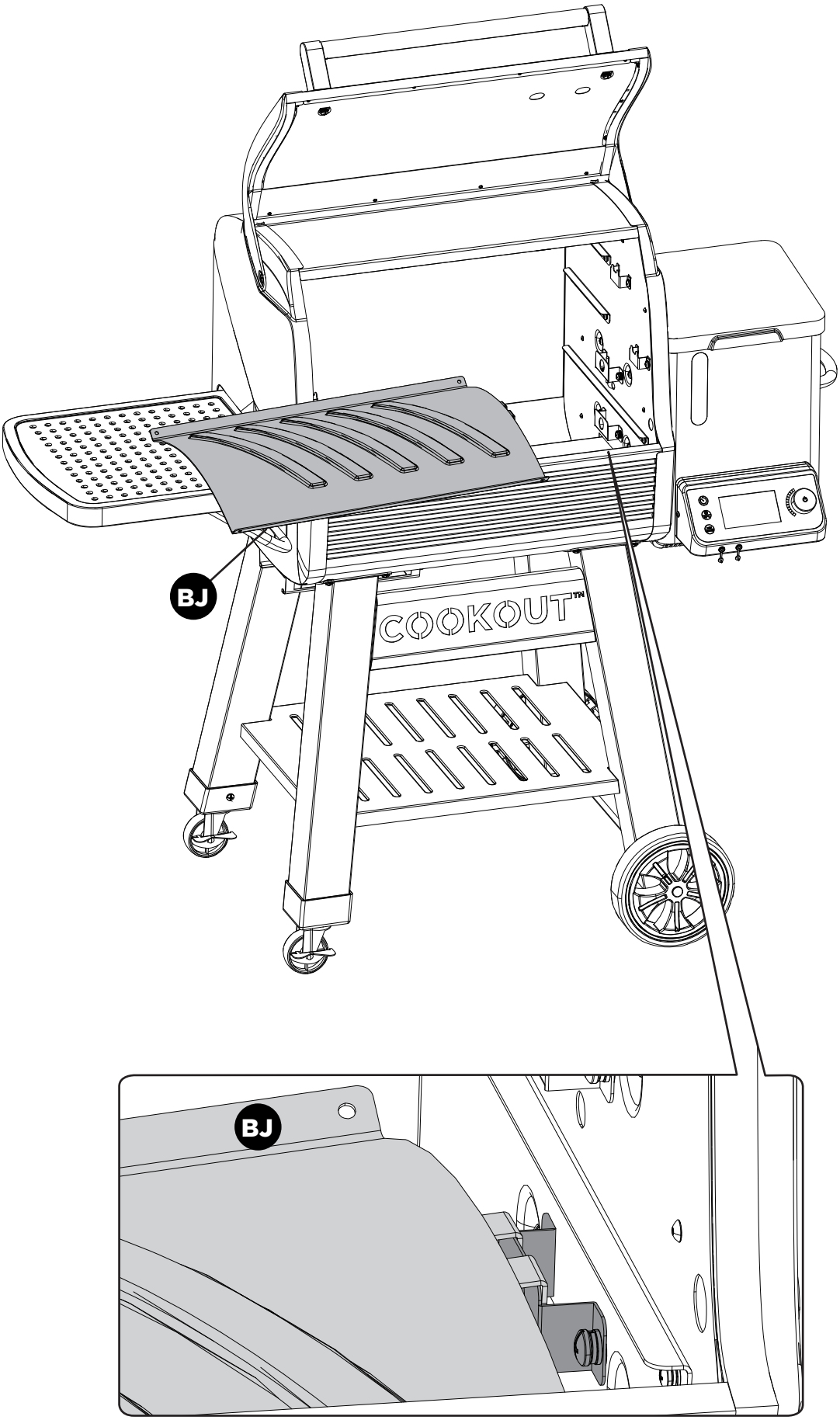

18

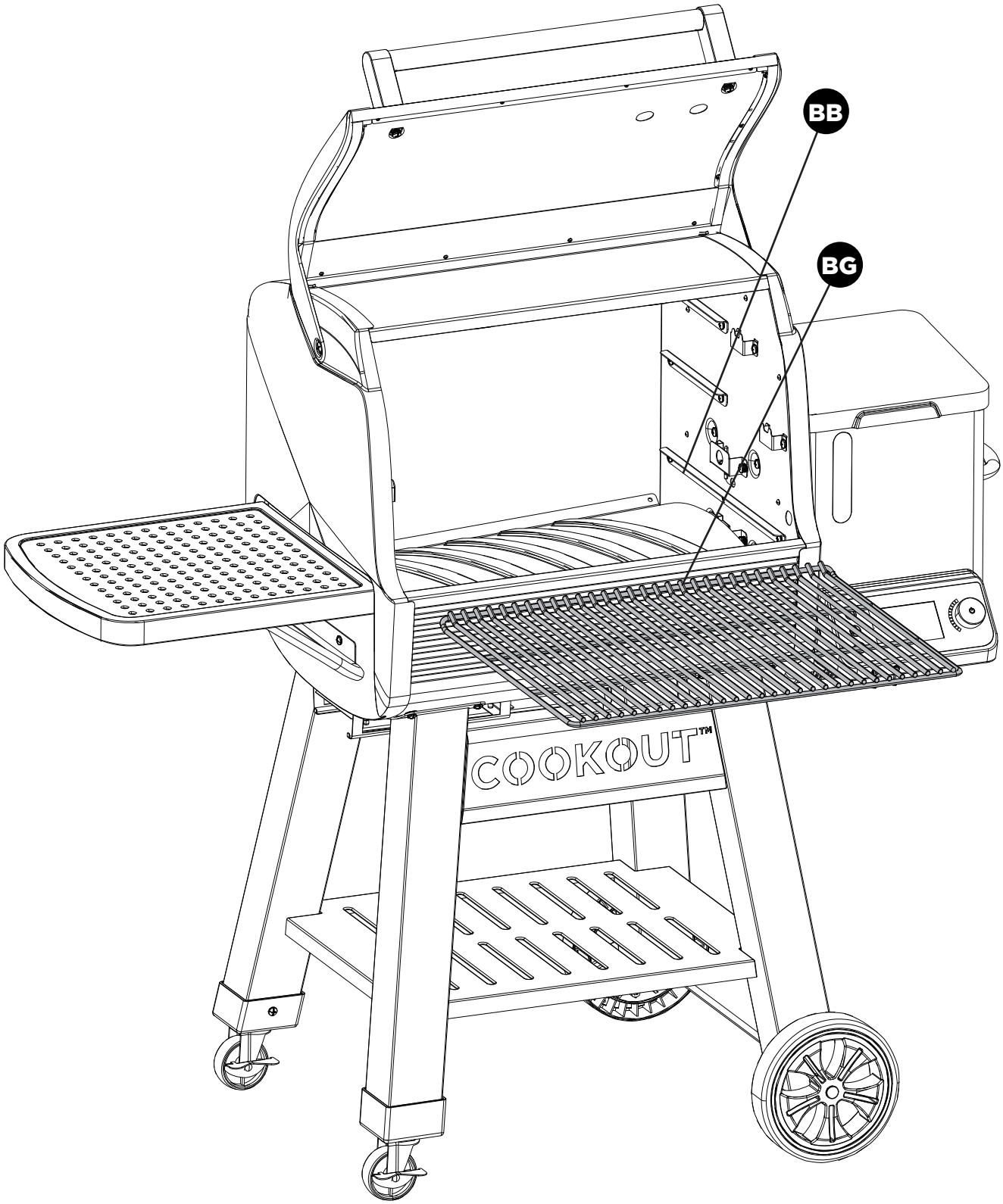

19

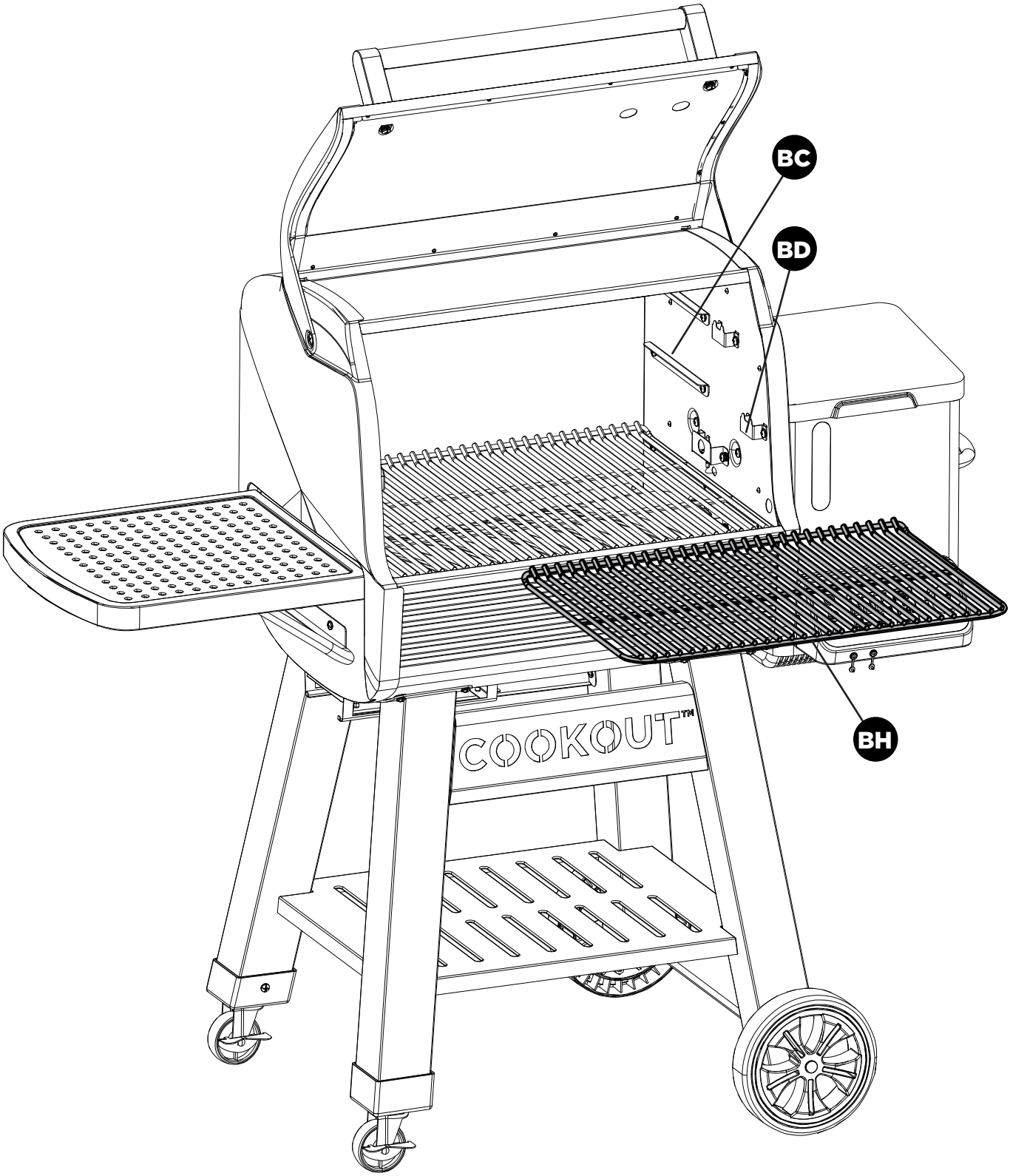

20

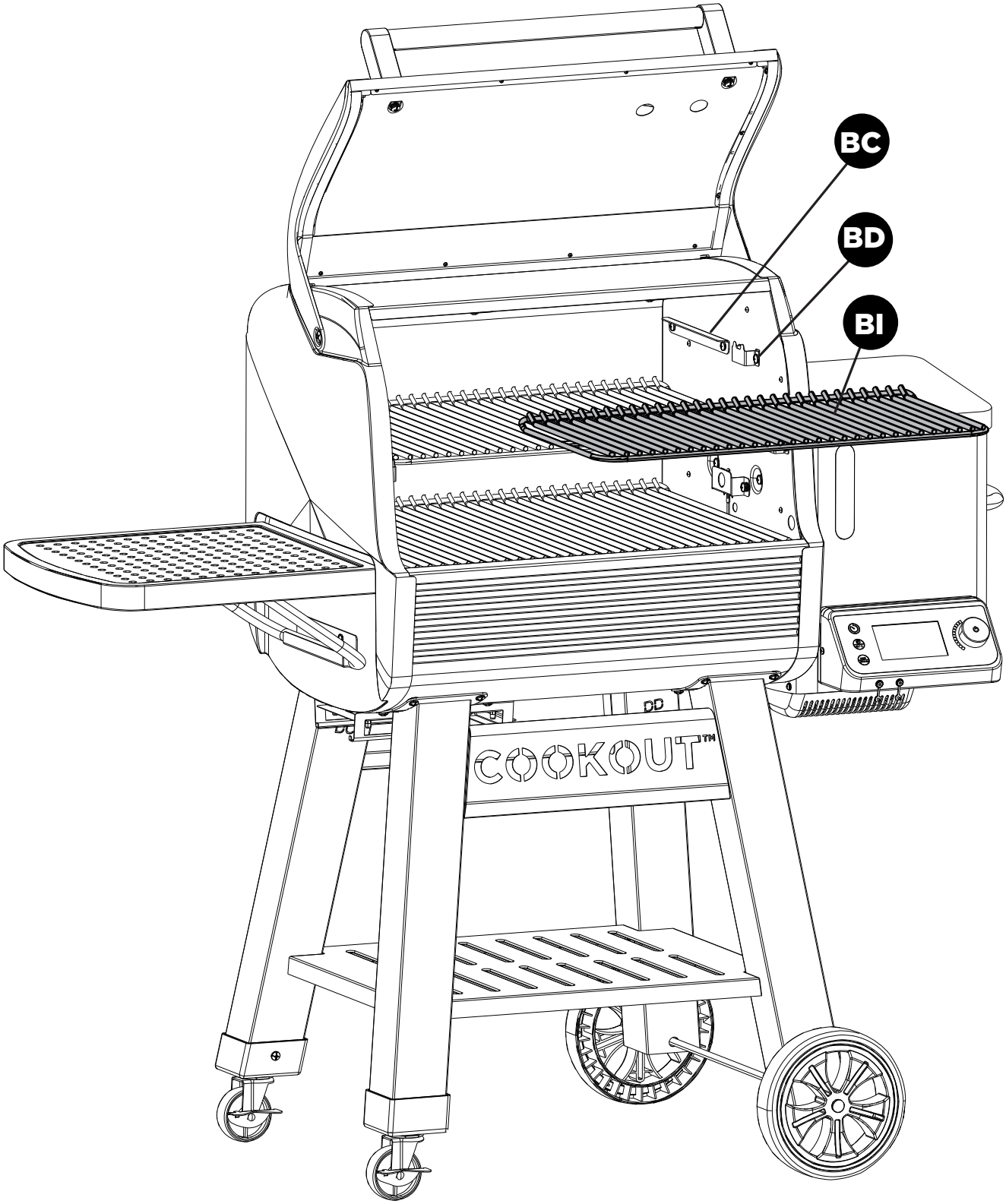

21

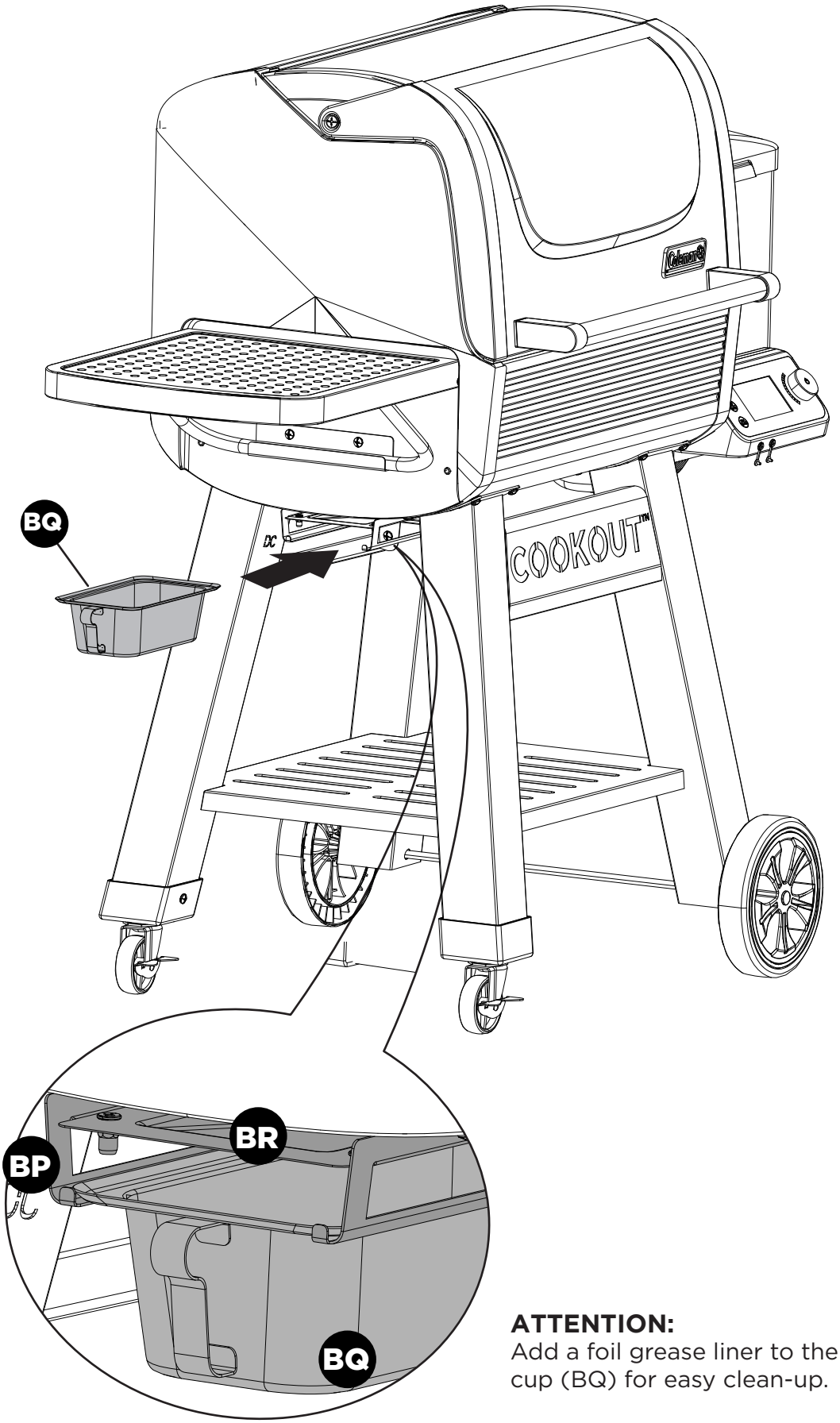

ATTENTION:
Add a foil grease liner to the grease cup (BQ) for easy clean-up.

To purchase the foil grease liner (Part #G703-0607-C6),
contact 1-800-249-2506.

⚠ WARNING HOT SURFACES:

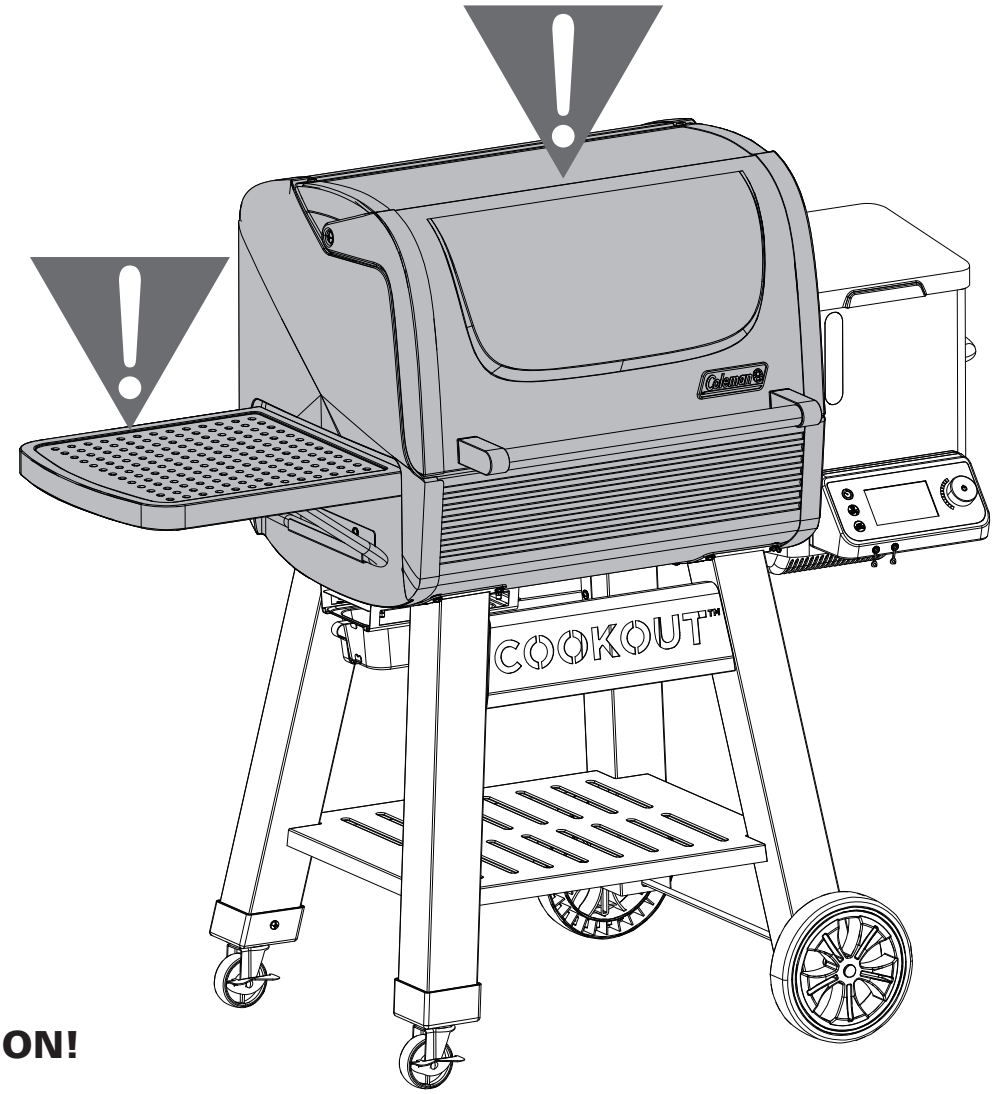

CAUTION!

- AVOID BURNS.
- DO NOT TOUCH WHEN PELLET GRILL IS IN USE.
- EXTREMELY HOT SURFACE.

* SHADED AREAS BECOME EXTREMELY HOT WHEN IN USE.

WARNINGS

- Failure to follow all of the manufaturer's instructions could result in hazardous fires, explosion, property damage or serious personal injury or even death.
- Do not try to start this pellet grill without reading and understanding the safety risks and instructions for use, outlined in the Safe Use & Care Manual.
- Some parts may contain sharp edges. Wear protective gloves during assembly and usage of this appliance.

Licenced by BackHome Products LLC.

©2024 The Coleman Company, Inc.
Coleman®, Coleman and are registered trademarks of
The Coleman Company, Inc. used under license.